J. Barnie Beasley, Jr., P.E.
Vice President
Vogtle Project

Southern Nuclear Operating Company, Inc.
40 Inverness Center Parkway
P.O. Box 1295
Birmingham, Alabama 35201

Tel 205.992.7110
Fax 205.992.0403

SOUTHERN COMPANY
Energy to Serve Your World™

October 18, 2000

LCV-1016-Q

Docket Nos.: 50-424
50-425

U. S. Nuclear Regulatory Commission
ATTN: Document Control Desk
Washington, D. C. 20555

Ladies and Gentlemen:

VOGTLE ELECTRIC GENERATING PLANT
REQUESTS FOR RELIEF - SECOND TEN-YEAR
INSERVICE INSPECTION PROGRAM

Enclosed for NRC review and approval are nine Requests for Relief that pertain to the Vogtle Electric Generating Plant (VEGP), Units 1 and 2, Second Ten-Year (STY) Inservice Inspection (ISI) Program that was originally submitted to the NRC by Southern Nuclear Operating Company (SNC) letter LCV-1016 dated May 29, 1997. Relief is being requested from the requirements of the 1989 Edition of the American Society of Mechanical Engineers (ASME) Boiler and Pressure Vessel Code, Section XI, as discussed in the enclosed requests for relief. In addition, one Request for Relief, i.e., RR-21, which was previously approved by the NRC, has been revised to incorporate editorial changes; otherwise, its intent remains unchanged. As a result, it is our opinion that the NRC does not need to take any additional action at this time with respect to any additional review/approval of RR-21. Four revisions to existing requests for relief, inclusive of the editorial changes to RR-21, and six new requests for relief are enclosed. A brief summary of the enclosed requests for relief follows:

1. Request for Relief (RR)-13 - The original request for relief was previously withdrawn by SNC in its letter LCV-1016-J dated June 26, 1998, to the NRC because it was generic in nature. RR-13 is being re-submitted in order to address

A047

specific pressure-retaining Class 1 piping welds on VEGP-1 & 2 that have since been identified through examination during the current second ten-year ISI interval to have physical limitations that prevent a "full-Code" examination from being performed. Please refer to Enclosure 1 for details.

2. RR-14 - The VEGP-1 Boron Injection Tank (BIT) support attachment (11204-V6-001-W05) and the VEGP-1 & 2 Chemical and Volume Control System (CVCS) Centrifugal Charging Pump (CCP) support attachments (11208-P6-002-W03 and 21208-P6-002-W03, respectively) have been added to Attachment 1 to existing Request for Relief RR-14. The current version of RR-14 was submitted to the NRC by SNC letter LCV-1016-J dated June 26, 1998, and subsequently approved by NRC letter dated December 31, 1998. A "full-Code" examination of the support attachments for the VEGP-1 BIT and the VEGP-1 & 2 CVCS CCP cannot be performed due to physical limitations. The enclosed version of RR-14 supersedes the previously approved version. Please refer to Enclosure 2 for details.

3. RR-15 - The original request for relief was previously withdrawn by SNC in its letter LCV-1016-J dated June 26, 1998, to the NRC because it was generic in nature. RR-15 is being re-submitted in order to address *specific* pressure-retaining Class 2 piping welds on VEGP-1 & 2 that have since been identified through examination during the current second ten-year ISI interval to have physical limitations that prevent a "full-Code" examination from being performed. Please refer to Enclosure 3 for details.

4. RR-21 - This existing request for relief has been revised to delete reference to the CVCS Regenerative Heat Exchangers for VEGP-1 & 2 (11208-E6-001 and 21208-E6-001, respectively). The welds and component supports for these heat exchangers are now addressed in new Request for Relief RR-33. In addition, references to the Suction Dampeners for VEGP-1 & 2 (1-1208-V4-001 and 2-1208-V4-001, respectively) and to the Discharge Dampeners for VEGP-1 & 2 (1-1208-V4-002 and 2-1208-V4-002, respectively) have been deleted since these components are no longer part of plant design. No other changes were made to the existing request for relief. The intent of Request for Relief RR-21 remains *unchanged* due to these editorial changes. As a result, it is our opinion that the NRC does not need to take any additional action at this time with respect to any additional review/approval of RR-21. Originally submitted to the NRC by SNC letter LCV-1016 dated May 29, 1997, RR-21 was subsequently approved by NRC letter dated December 31, 1998. The enclosed version of RR-21 supersedes the previously submitted version and should continue to have NRC approval even

though editorially changed. A copy of the revised request for relief is provided in Enclosure 4.

5. RR-33 - New Request for Relief RR-33 addresses the VEGP-1 & 2 CVCS Regenerative Heat Exchangers previously discussed in RR-21. Relief is requested from performing the visual and volumetric examinations of the affected heat exchanger welds and component supports due to radiation exposure concerns. Please refer to Enclosure 5 for details.

6. RR-34 - New Request for Relief RR-34 addresses Class 2 and 3 pressure-retaining bolting in non-borated systems at VEGP-1 & 2. Relief is requested from removing bolting from pressure-retaining bolted connections in non-borated systems and from performing visual examinations should leakage be observed during the performance of ASME Section XI pressure testing activities. Please refer to Enclosure 6 for details.

7. RR-36 - New Request for Relief RR-36 addresses Class 1, 2, 3, and ASME Section XI Code Case N-491 tables used in selecting the maximum percentages of examinations credited for each inservice inspection period. In lieu of the Code requirements of the 1989 Edition of ASME Section XI, SNC requests NRC authorization to use ASME Section XI Code Case N-598. Please refer to Enclosure 7 for details.

8. RR-37 - New Request for Relief RR-37 addresses the purchase, exchange, and transfer of materials between nuclear electric generating facilities. NRC authorization is being requested to allow use of ASME Section XI Code Case N-528 in lieu of the ASME Section III Code administrative requirements imposed by IWA-7210. Please refer to Enclosure 8 for details. It should be noted that a similar request for relief was approved for another SNC-operated plant, Hatch Units 1 and 2, under NRC TAC Numbers MA6163 and MA6164.

9. RR-38 - New Request for Relief RR-38 proposes an alternative to the reporting requirements for inservice inspection as it relates to Class 1 and 2 piping and components. Specifically, an alternative to submittal of the ASME Form NIS-1, "Owner's Report for Inservice Inspection" (inclusive of ASME Form NIS-2, "Owner's Report for Repairs and Replacements") to the NRC is proposed by SNC and involves maintaining the subject report at the site for NRC review. Please refer to Enclosure 9 for details.

10. RR-39 - New Request for Relief RR-39 proposes an alternative to the training requirements for nondestructive examination (NDE) personnel who perform volumetric examinations on components subject to ultrasonic examination. In lieu of the Code requirements, SNC requests NRC authorization to use the alternative annual NDE personnel training requirements defined in ASME Section XI Code Case N-583. Please refer to Enclosure 10 for details.

Southern Nuclear Operating Company requests NRC approval of Requests for Relief RR-34, RR-36, RR-37, RR-38, and RR-39 by March 15, 2001, in order to support the upcoming VEGP-2 Eighth Maintenance/Refueling Outage (2R8) which is currently scheduled to begin April 8, 2001. NRC approval of the remaining requests for relief, i.e., RR-13, RR-14, RR-15, and RR-33, submitted herein is requested by June 1, 2001. As discussed herein, it is our opinion that the NRC does not need to take any additional action at this time with regard to the review/approval of RR-21 since its intent has not been changed due to the purely editorial changes that were made.

Should there be any questions in this regard, please contact this office.

Sincerely,

J. B. Beasley, Jr.

JBB/JAE/

Enclosures:
1. VEGP-1 & 2 STY ISI Program, Request for Relief RR-13
2. VEGP-1 & 2 STY ISI Program, Request for Relief RR-14
3. VEGP-1 & 2 STY ISI Program, Request for Relief RR-15
4. VEGP-1 & 2 STY ISI Program, Request for Relief RR-21
5. VEGP-1 & 2 STY ISI Program, Request for Relief RR-33
6. VEGP-1 & 2 STY ISI Program, Request for Relief RR-34
7. VEGP-1 & 2 STY ISI Program, Request for Relief RR-36
8. VEGP-1 & 2 STY ISI Program, Request for Relief RR-37
9. VEGP-1 & 2 STY ISI Program, Request for Relief RR-38
10. VEGP-1 & 2 STY ISI Program, Request for Relief RR-39

xc: See next page for distribution

xc: Southern Nuclear Operating Company
Mr. W. L. Burmeister (w/o enclosures)
Mr. J. T. Gasser (w/o enclosures)
Mr. M. Sheibani (w/enclosures)
SNC Document Management (w/enclosures)

U. S. Nuclear Regulatory Commission
Mr. R. R. Assa, Project Manager, NRR (w/enclosures)
Mr. L. A. Reyes, Regional Administrator (w/enclosures)
Mr. J. Zeiler, Senior Resident Inspector, Vogtle (w/enclosures)

ENCLOSURE 1
TO
SOUTHERN NUCLEAR OPERATING COMPANY
LETTER LCV-1016-Q

VOGTLE ELECTRIC GENERATING PLANT, UNITS 1 AND 2
SECOND TEN-YEAR INSERVICE INSPECTION PROGRAM
REQUEST FOR RELIEF RR-13

SOUTHERN NUCLEAR OPERATING COMPANY
VOGTLE ELECTRIC GENERATING PLANT, UNITS 1 AND 2
SECOND TEN-YEAR INTERVAL
REQUEST FOR RELIEF NO. RR-13

I. System/Components(s) for Which Relief is Requested:

Volumetric examination of pressure-retaining piping welds in Class 1 systems as identified in Attachment 1 to this request for relief.

II. Code Requirement:

Examination Category B-J, Table IWB-2500-1, of the 1989 Edition of the ASME Section XI Code requires surface and volumetric examination of pressure-retaining welds in Class 1 piping. Applicable examination volumes are shown in ASME Section XI Figure IWB-2500-8 and includes essentially 100% of the weld length. In addition, ASME Section XI Appendix III, Supplement 4, requires that the angle beam examination for reflectors transverse to the weld be performed on the weld crown and 1/2 inch of the base material on each side of the weld for austenitic materials.

III. Code Requirement from Which Relief is Requested:

Relief is requested from performing a full Code Coverage volumetric examination of the Class 1 piping welds identified in Attachment 1 to this request for relief.

IV. Basis for Relief:

Physical limitations due to geometric configuration of the welded areas restrict coverage of examination volume as required by Figure IWB-2500-8 and ASME Section XI Appendix III, Supplement 4. To obtain 100% coverage, the ultrasonic beam must pass through the entire examination volume in 4 directions, axial (up & down) and circumferential (clockwise & counter-clockwise). Full axial coverage from one side may be accomplished by utilizing a 3T calibration (1 ½ node). However, weld configurations (crown, counterbore) and/or material properties may not allow examination coverage to extend beyond 1T (1/2 node). For the First Ten-Year Interval, the circumferential (transverse) scans were only required on the weld crown per Appendix III of the 1983 Edition of ASME Section XI with Addenda through Summer 1983. That requirement could usually be met for most configurations. Refer to Attachment 2 of this document for a typical representation of a single side access examination, along with limitations.

V. Alternate Examination:

No alternate examination is proposed. However, refracted longitudinal (RL) waves, which have been shown to provide a more reliable detection of circumferential flaws when passing through the weld material, are used on all single side access austenitic welds.

VI. Justification for Granting Relief:

The volumetric examinations of the Class 1 piping welds are being conducted to the fullest extent practical. As noted herein, physical access is restricted, thereby preventing full Code examination coverage.

In order to examine 100% of the weld volume, systems would require extensive modifications. The resulting increase in plant safety would not compensate for the burden that would result from imposition of the requirement. While Code coverage during the second ten-year interval may vary due to the imposition of the new Code requirement, the level of quality will not change from that obtained during the first ten-year interval.

As a result, SNC requests that relief be authorized pursuant to 10 CFR 50.55a(g)(6)(i) since complete examination coverage is impractical.

VII. Implementation Schedule:

The subject examinations will be performed to the fullest extent practical during the Second Ten-Year Interval which commenced May 31, 1997.

(Note: The original version of Request for Relief RR-13 was submitted to the NRC for review and approval by SNC letter LCV-1016 dated May 29, 1997. It was subsequently withdrawn by SNC letter LCV-1016-J dated June 26, 1998, to the NRC since the request for relief did not identify specific Class 1 piping welds that have limitations that prevent "full-Code" examination coverage of greater than 90%. This re-submittal of RR-13 is for NRC review and approval and includes specific welds that have been identified through examination to have limitations that prevent a "full-Code" examination from being performed.)

(continued)

ATTACHMENT 1

ASME Section XI Category/Item No.	Identification No.	Description	Limitation	Approximate Percentage	1st Int RR No.
B-J / B9.11	11201-058-7	VEGP-1 6" Elbow to Flange	One sided examination due to flange configuration	87%	N/A
B-J / B9.11	11204-023-16	VEGP-1 6" Valve to Pipe	One sided examination due to valve configuration	75%	N/A
B-J / B9.11	11204-042-1	VEGP-1 6" Valve to Pipe	One sided examination due to valve configuration	65%	N/A
B-J / B9.11	11204-043-1	VEGP-1 6" Valve to Pipe	One sided examination due to valve configuration	65%	N/A
B-J / B9.11	11204-044-2	VEGP-1 6" Valve to Pipe	One sided examination due to valve configuration	62%	N/A
B-J / B9.11	21201-029-30	VEGP-2 4" Pipe to Valve	One sided examination due to valve configuration	80%	N/A
B-J / B9.11	21201-036-6	VEGP-2 12" Pipe to Valve	One sided examination due to valve configuration	87%	N/A
B-J / B9.11	21201-036-7	VEGP-2 12" Valve to Pipe	One sided examination due to valve configuration	87%	N/A
B-J / B9.11	21204-023-16	VEGP-2 6" Valve to Pipe	One sided examination due to valve configuration	87%	N/A
B-J / B9.11	21204-042-1	VEGP-2 6" Valve to Pipe	One sided examination due to valve configuration	87%	N/A
B-J / B9.11	21204-042-15	VEGP-2 6" Pipe to Tee	One sided examination due to tee configuration	86%	N/A
B-J / B9.11	21204-043-1	VEGP-2 6" Valve to Pipe	One sided examination due to valve configuration	87%	N/A

(continued)

ATTACHMENT 2

Typical Single Side Access for Volumetric Examinations

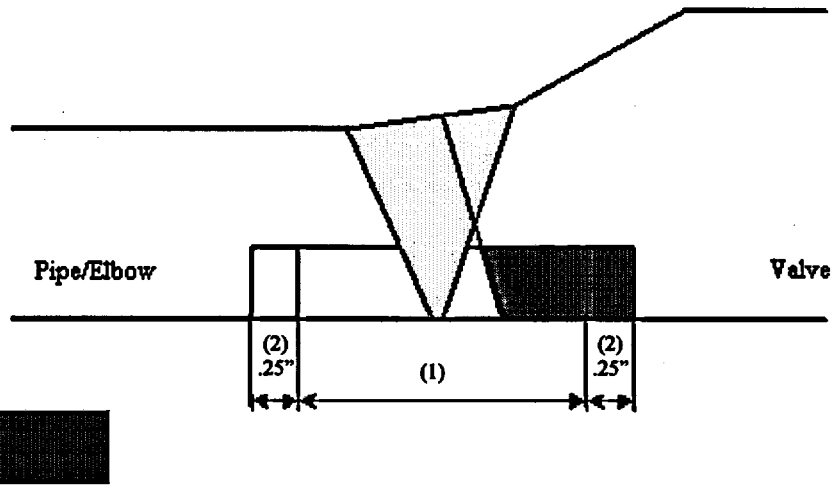

Unscanned Area
Austenetic Transverse

(1) Examination volume: Weld + ¼" each side of weld toe.
(2) Examination volume: Weld + ½" each side of weld toe for austenitic transverse scans.

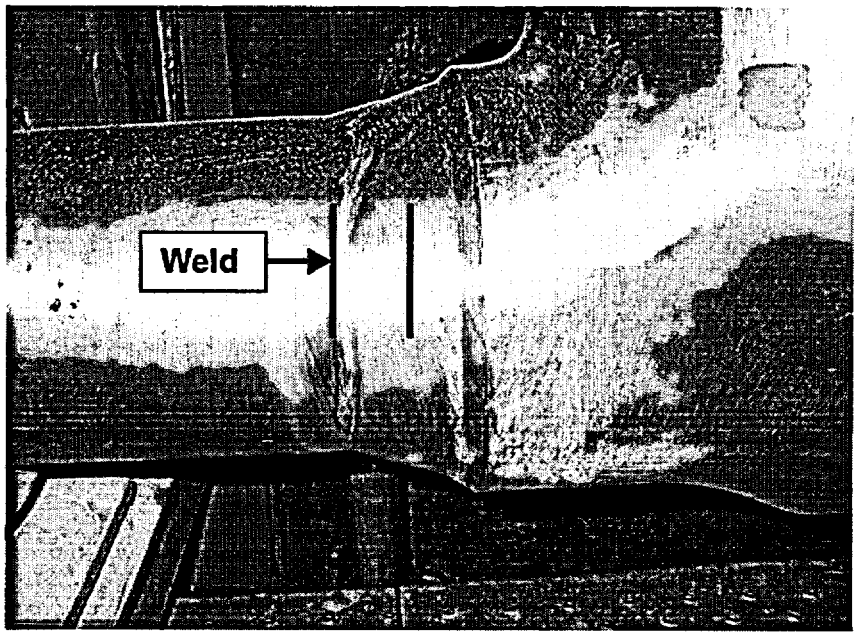

ENCLOSURE 2
TO
SOUTHERN NUCLEAR OPERATING COMPANY
LETTER LCV-1016-Q

VOGTLE ELECTRIC GENERATING PLANT, UNITS 1 AND 2
SECOND TEN-YEAR INSERVICE INSPECTION PROGRAM
REQUEST FOR RELIEF RR-14

SOUTHERN NUCLEAR OPERATING COMPANY
VOGTLE ELECTRIC GENERATING PLANT, UNITS 1 AND 2
SECOND TEN-YEAR INTERVAL
REQUEST FOR RELIEF NO. RR-14

I. System/Component(s) for Which Relief is Requested:

Volumetric examination of pressure-retaining welds and nozzle inner radius sections of vessels and surface examinations of nozzle reinforcement plates (Class 2) as identified in Attachment 1 to this request for relief.

II. Code Requirement:

(a) ASME Section XI, Category C-A, Item No. C1.20, Table IWC-2500-1, requires volumetric examination of pressure-retaining welds of Class 2 pressure vessels. Applicable examination volumes are shown in Figures IWC-2500-1 and 2.

(b) ASME Section XI, Category C-B, Item Nos. C2.21 and C2.22, Table IWC-2500-1, requires volumetric examinations of pressure-retaining welds of Class 2 pressure vessels and nozzle inner radii and surface examinations of nozzle reinforcement plate welds. The applicable examination volume is shown in Figure IWC-2500-4.

(c) ASME Section XI, Category C-C, Item No. C3.10, Table IWC-2500-1, requires surface examination of integrally welded attachments of Class 2 pressure vessels. Applicable examination areas are shown in Figure IWC-2500-5.

III. Code Requirement from Which Relief is Requested:

Relief is requested from performing the Code-required volumetric examinations of the components identified in Attachment 1 to this request for relief.

IV. Basis for Relief:

(a) For the VEGP-1 Boron Injection Tank (BIT), the outside diameter (OD) configuration, combined with the interfering support legs and cast stainless steel material, presents physical limitations that prevent complete coverage during ultrasonic examinations.

(b) Geometric configuration of the SG main steam, auxiliary feedwater, main feedwater nozzles, and Boron Injection Tank nozzles presents physical limitations that prevent complete coverage during ultrasonic examination. As a result, scanning from the nozzle side is not feasible.

The configuration of the steam generator (SG) steam outlet nozzle is such that no inner radius exists. The nozzle is manufactured from a forging that is a solid block of steel. Seven (7) holes, each 8 1/2-inch diameter, have been drilled through this forging to provide an outlet for the steam. Thus, this nozzle does not have a conventional inner radius.

IV. Basis for Relief (continued):

The configuration of the VEGP Residual Heat Removal (RHR) heat exchanger (Hx) nozzles differs from that shown in ASME Section XI Figure IWC-2500-4(c). Although the reinforcing plate welded to the vessel has a rounded configuration in the flow, it is not a true nozzle inner radius when compared with the configuration in Figure IWC-2500-4(c). Please refer to Attachment 2 for a figure depicting the VEGP configuration. It is not possible to perform an inner radius ultrasonic examination since the interface between the reinforcing plate and the RHR heat exchanger vessel wall prohibits volumetric examination. Although the reinforcement plate is welded to the inside diameter of the heat exchanger wall, the reinforcing plate-to-vessel welds are inaccessible. Therefore, it is impractical to perform a surface examination on the reinforcing plate-to-vessel welds.

(c) The Boron Injection Tank (BIT) and Centrifugal Charging Pump (CCP) integrally welded support attachments are configured such that portions of the weld are inaccessible for surface examination. Please refer to Attachment 3 for pictures depicting the VEGP configuration of the BIT and CCP integrally welded support attachments.

V. Alternate Examination:

No alternate examination is proposed. The affected Class 2 vessel welds are being examined to the fullest extent practical.

VI. Justification for Granting Relief:

The examinations are being conducted to the fullest extent practical.

Relief was initially granted by the NRC during the First Ten-Year Interval for those welds/components in Attachment 1 having requests for relief submitted for them. These included First Ten-Year Interval Requests for Relief RR-28, RR-29, RR-30, and RR-32. NRC approval was documented in correspondence dated November 26, 1991, and December 17, 1991, for VEGP-1 and 2, respectively. It was determined during the first ten-year interval review process that geometric configurations and interferences make the volumetric examinations of these welds impractical to perform to the extent required by the Code. The subject components would require extensive modifications in order to obtain complete compliance with the specific requirements of ASME Section XI. The increase in plant safety would not compensate for the burden placed on the licensee that would result from imposition of the requirement.

(continued)

VI. Justification for Granting Relief (continued):

Although there are physical obstructions which limit the amount of examination coverage for those components identified in Attachment 1, reasonable assurance still exists that an acceptable level of quality and safety will be maintained since there have been no catastrophic failures of Class 2 pressure vessels. SNC requests that relief be authorized pursuant to 10 CFR 50.55a(g)(6)(i) since imposing the Code requirements is impractical.

VII. Implementation Schedule:

The subject examinations will be performed to the fullest extent practical during the Second Ten-Year Interval which commenced May 31, 1997.

ATTACHMENT 1

ASME Section XI Category/Item No.	Identification No.	Description	Limitation	Approximate Percentage	1st Int. RR No.
C-A / C1.20	11204-V6-001-W02	VEGP-1 BIT Head to Shell Weld	Vessel supports and weld configuration (OD taper)	57%	RR-30
C-A / C1.20	11204-V6-001-W03	VEGP-1 BIT Head to Shell Weld	Vessel weld configuration (OD taper)	62%	RR-30
C-B / C2.21	11201-B6-001-W18	VEGP-1 SG Main Steam outlet nozzle to head weld	Nozzle configuration (100% shell / 0% nozzle)	50%	RR-29
C-B / C2.21	11201-B6-002-W19	VEGP-1 SG Feedwater nozzle to shell weld	Nozzle configuration (100% shell / 0% nozzle)	50%	RR-29
C-B / C2.21	11201-B6-004-W26	VEGP-1 SG Auxiliary Feedwater nozzle to shell	Nozzle configuration (100% shell / 0% nozzle)	50%	RR-29
C-B / C2.21	11204-V6-001-W01	VEGP-1 BIT Nozzle to Head Weld	Nozzle configuration (100% shell / 0% nozzle)	50%	RR-30
C-B / C2.21	11204-V6-001-W04	VEGP-1 BIT Nozzle to Head Weld	Nozzle configuration (100% shell / 0% nozzle)	50%	RR-30
C-B / C2.21	21201-B6-001-W18	VEGP-2 SG Main Steam outlet nozzle to head weld	Nozzle configuration (100% shell / 0% nozzle)	50%	Unit 2 RR-29
C-B / C2.21	21201-B6-002-W19	VEGP-2 SG Feedwater nozzle to shell weld	Nozzle configuration (100% shell / 0% nozzle)	50%	Unit 2 RR-29
C-B / C2.21	21201-B6-002-W26	VEGP-2 SG Auxiliary feedwater nozzle to shell	Nozzle configuration (100% shell / 0% nozzle)	50%	Unit 2 RR-29
C-B / C2.22	11201-B6-001-IR03	VEGP-1 SG Main Steam outlet nozzle inner radii	Nozzle configuration (no inner radius)	0%	RR-28
C-B / C2.22	11205-E6-001-IR01 & IR02	VEGP-1 RHR Hx Inner radii	Nozzle configuration (0% shell / 0% nozzle)	0%	RR-32

ATTACHMENT 1 (continued)

ASME Section XI Category/Item No.	Identification No.	Description	Limitation	Approximate Percentage	1st Int. RR No.
C-B / C2.22	11205-E6-002-IR01 & IR02	VEGP-1 RHR Hx Inner radii	Nozzle configuration (0% shell / 0% nozzle)	0%	RR-32
C-B / C2.22	21201-B6-001-IR03	VEGP-2 SG Main Steam outlet nozzle inner radii	Nozzle configuration (no inner radius)	0%	Unit 2 RR-28
C-B / C2.22	21205-E6-001-IR01 & IR02	VEGP-2 RHR Hx Inner radii	Nozzle configuration (0% shell / 0% nozzle)	0%	Unit 2 RR-32
C-B / C2.22	21205-E6-002-IR01 & IR02	VEGP-2 RHR Hx Inner radii	Nozzle configuration (0% shell / 0% nozzle)	0%	Unit 2 RR-32
C-B / C2.31	11205-E6-001-W09, through W12	VEGP-1 RHR Hx reinforcement plate	Nozzle configuration (Inaccessible)	0%	RR-32
C-B / C2.31	11205-E6-002-W09, through W12	VEGP-1 RHR Hx reinforcement plate	Nozzle configuration (Inaccessible)	0%	RR-32
C-B / C2.31	21205-E6-001-W09, through W12	VEGP-2 RHR Hx reinforcement plate	Nozzle configuration (Inaccessible)	0%	Unit 2 RR-32
C-B / C2.31	21205-E6-002-W09, through W12	VEGP-2 RHR Hx reinforcement plate	Nozzle configuration (Inaccessible)	0%	Unit 2 RR-32
C-C / C3.30	11204-V6-001-W05	VEGP-1 Boron Injection Tank Support Attachment	Support configuration	64%	Unit 1 RR-30
C-C / C3.30	11208-P6-002-W03	VEGP-1 CVCS CCP Support Attachment	Support configuration	70%	Unit 1 RR-30
C-C / C3.30	21208-P6-002-W03	VEGP-2 CVCS CCP Support Attachment	Support configuration	70%	Unit 2 RR-30

ATTACHMENT 2

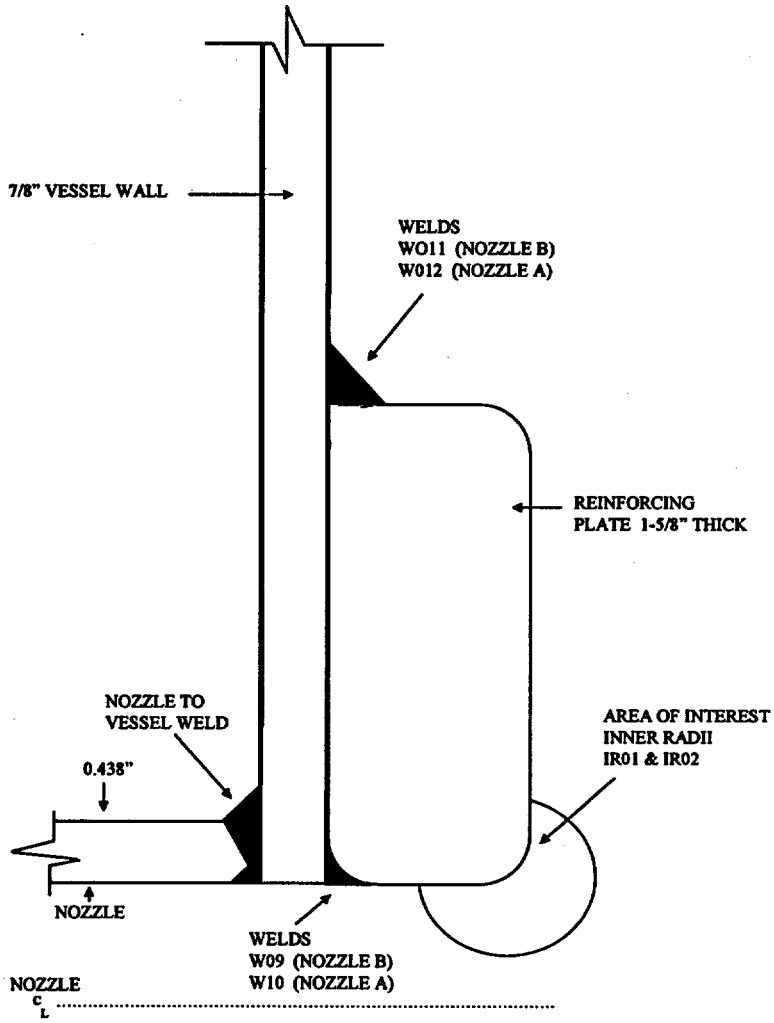

RESIDUAL HEAT REMOVAL HEAT EXCHANGER
NOZZLE TO VESSEL WELDS
(NOT TO SCALE)

ATTACHMENT 3

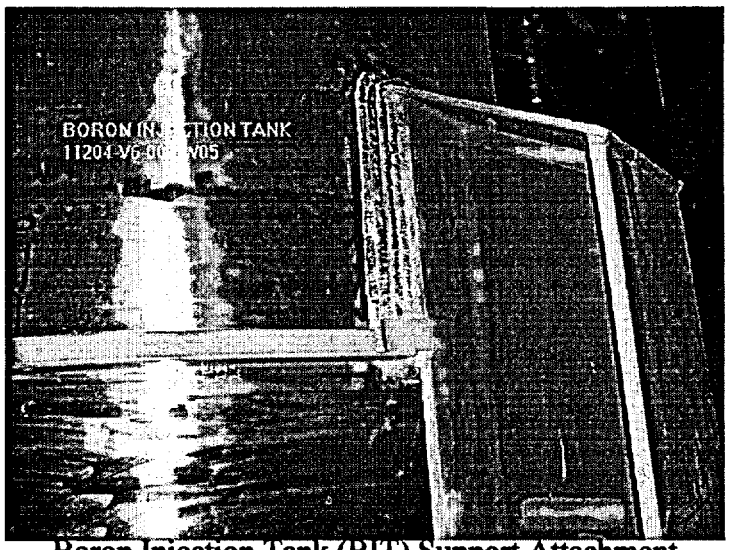

Boron Injection Tank (BIT) Support Attachment
(Inaccessible Portion of Weld Behind Support)

Centrifugal Charging Pump (CCP) Support Attachment
(Inaccessible Portion of Weld Behind Support)

ENCLOSURE 3
TO
SOUTHERN NUCLEAR OPERATING COMPANY
LETTER LCV-1016-Q

VOGTLE ELECTRIC GENERATING PLANT, UNITS 1 AND 2
SECOND TEN-YEAR INSERVICE INSPECTION PROGRAM
REQUEST FOR RELIEF RR-15

SOUTHERN NUCLEAR OPERATING COMPANY
VOGTLE ELECTRIC GENERATING PLANT, UNITS 1 AND 2
SECOND TEN-YEAR INTERVAL
REQUEST FOR RELIEF NO. RR-15

I. System/Components(s) for Which Relief is Requested:

Volumetric examination of pressure-retaining piping welds in Class 2 systems as identified in Attachment 1 to this request for relief.

II. Code Requirement:

Examination Category C-F-1, Table IWC-2500-1, of the 1989 Edition of the ASME Section XI Code requires surface and volumetric examination of pressure-retaining welds in Class 2 piping. Applicable examination volumes are shown in ASME Section XI Figure IWC-2500-7 and includes essentially 100% of the weld length. In addition, ASME Section XI Appendix III, Supplement 4, requires that the angle beam examination for reflectors transverse to the weld be performed on the weld crown and 1/2 inch of the base material on each side of the weld for austenitic materials.

III. Code Requirement from Which Relief is Requested:

Relief is requested from performing a full Code Coverage volumetric examination of the Class 2 piping welds identified in Attachment 1 to this request for relief.

IV. Basis for Relief:

Physical limitations due to geometric configuration of the welded areas restrict coverage of the examination volume required by Figure IWC-2500-7 and ASME Section XI Appendix III, Supplement 4. To obtain 100% coverage, the ultrasonic beam must pass through the entire examination volume in 4 directions, axial (up & down) and circumferential (clockwise & counter-clockwise). Full axial coverage from one side may be accomplished by utilizing a 3T calibration (1 ½ node). However, weld configurations (crown, counterbore) and/or material properties may not allow examination coverage to extend beyond 1T (1/2 node). For the First Ten-Year Interval, the circumferential (transverse) scans were only required on the weld crown per Appendix III of the 1983 Edition of ASME Section XI with Addenda through Summer 1983. That requirement could usually be met for most configurations. Refer to Attachment 2 of this document for a typical representation of a single side access examination, along with limitations.

V. Alternate Examination:

No alternate examination is proposed. However, refracted longitudinal (RL) waves, which have been shown to provide a more reliable detection of circumferential flaws when passing through the weld material, are used on all single side access austenitic welds.

(continued)

VI. Justification for Granting Relief:

The volumetric examinations of the Class 2 piping welds are being conducted to the fullest extent practical. As noted herein, physical access is restricted, thereby preventing full Code examination coverage.

Relief was granted by the NRC for a portion of the Class 2 piping welds listed in Attachment 1 during the First Ten-Year Interval. These included First Ten-Year Interval Requests for Relief RR-34, RR-35, RR-36 and RR-37 for VEGP-1 and 2. NRC approval was documented in correspondence dated November 26, 1991, and December 17, 1991, for VEGP-1 and 2, respectively.

In order to examine 100% of the weld volume, systems would require extensive modifications. The resulting increase in plant safety would not compensate for the burden that would result from imposition of the requirement. While Code coverage during the second ten-year interval may vary due to the imposition of the new Code requirement, the level of quality will not change from that obtained during the first ten-year interval.

As a result, SNC requests that relief be authorized pursuant to 10 CFR 50.55a(g)(6)(i) since complete examination coverage is impractical.

VII. Implementation Schedule:

The subject examinations will be performed to the fullest extent practical during the Second Ten-Year Interval which commenced May 31, 1997.

(Note: The original version of Request for Relief RR-15 was submitted to the NRC for review and approval by SNC letter LCV-1016 dated May 29, 1997. It was subsequently withdrawn by SNC letter LCV-1016-J dated June 26, 1998, to the NRC since the request for relief did not identify specific Class 2 piping welds that have limitations that prevent "full-Code" examination coverage of greater than 90%. This re-submittal of RR-15 is for NRC review and approval and includes specific welds that have been identified through examination to have limitations that prevent a "full-Code" examination from being performed.)

(continued)

ATTACHMENT 1

ASME Section XI Category/Item No.	Identification No.	Description	Limitation	Approximate Percentage	1st Int RR No.
C-F-1 / C5.11	11204-012-1	VEGP-1 8" Valve to Pipe	One sided examination due to valve configuration	86%	N/A
C-F-1 / C5.11	11204-012-2	VEGP-1 8" Pipe to Valve	One sided examination due to valve configuration	86%	RR-36
C-F-1 / C5.11	11204-012-3	VEGP-1 8" Valve to Pipe	One sided examination due to valve configuration	86%	N/A
C-F-1 / C5.11	11204-039-1	VEGP-1 8" Valve to Pipe	One sided examination due to valve configuration	88%	N/A
C-F-1 / C5.11	11204-039-34	VEGP-1 6" Pipe to Valve	One sided examination due to valve configuration	62%	N/A
C-F-1 / C5.11	11205-005-32	VEGP-1 14" Pipe to Nozzle	One sided examination due to nozzle configuration	87%	RR-36
C-F-1 / C5.11	11205-006-19	VEGP-1 8" Pipe to Valve	One sided examination due to valve configuration	85%	N/A
C-F-1 / C5.11	11205-007-6	VEGP-1 8" Pipe to Flange	One sided examination due to flange configuration	87%	N/A
C-F-1 / C5.11	11205-007-7	VEGP-1 8" Flange to Pipe	One sided examination due to flange configuration	75%	N/A
C-F-1 / C5.11	11206-004-4	VEGP-1 10" Pipe to Valve	One sided examination due to valve configuration	86%	RR-36
C-F-1 / C5.11	11206-004-17	VEGP-1 12" Flange to Pipe	One sided examination due to flange configuration	88%	RR-36
C-F-1 / C5.21	11208-145-16	VEGP-1 4" Pipe to Valve	One sided examination due to valve configuration	86%	N/A
C-F-1 / C5.11	11208-411-27	VEGP-1 8" Valve to Pipe	One sided examination due to valve configuration	86%	N/A

(continued)

ATTACHMENT 1

ASME Section XI Category/Item No.	Identification No.	Description	Limitation	Approximate Percentage	1st Int RR No.
C-F-1 / C5.11	21205-008-80	VEGP-2 8" Pipe to Valve	One sided examination due to valve configuration	64%	N/A

(continued)

ATTACHMENT 2

Typical Single Side Access for Volumetric Examinations

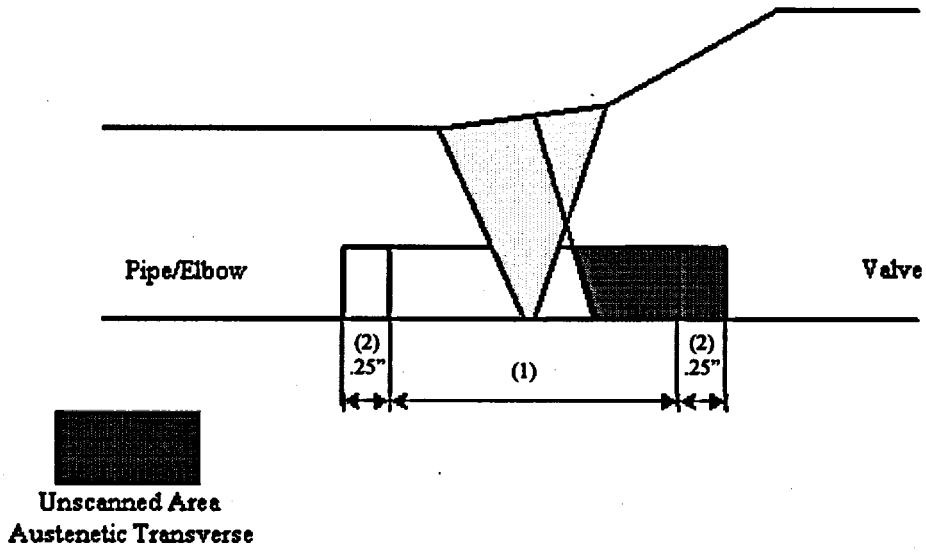

(1) Examination volume: Weld + ¼" each side of weld toe.
(2) Examination volume: Weld + ½" each side of weld toe for austenitic transverse scans.

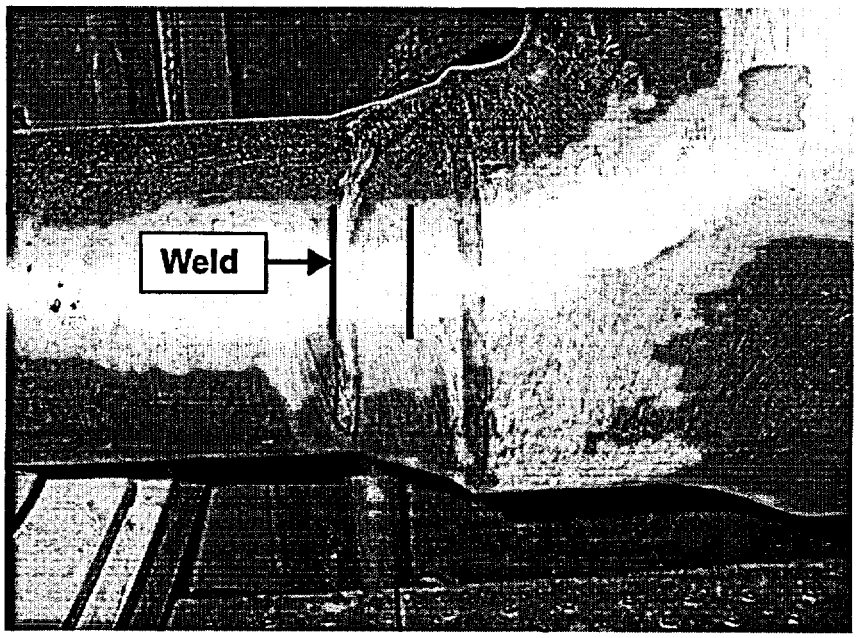

ENCLOSURE 4
TO
SOUTHERN NUCLEAR OPERATING COMPANY
LETTER LCV-1016-Q

VOGTLE ELECTRIC GENERATING PLANT, UNITS 1 AND 2
SECOND TEN-YEAR INSERVICE INSPECTION PROGRAM
REQUEST FOR RELIEF RR-21

SOUTHERN NUCLEAR OPERATING COMPANY
VOGTLE ELECTRIC GENERATING PLANT, UNITS 1 AND 2
SECOND TEN-YEAR INTERVAL
REQUEST FOR RELIEF NO. RR-21

I. System/Component(s) for Which Relief is Requested:

Relief is requested from the surface and volumetric examination requirements of vessels and their connections in piping 4" nominal pipe size (NPS) and smaller in:

1. Residual Heat Removal (RHR), Emergency Core Cooling (ECC), and Containment Heat Removal (CHR) systems or portions thereof, except high pressure safety injection systems.

2. Systems other than RHR, ECC, and CHR systems or portions thereof.

Specifically, the following components are involved:

Component	VEGP-1 Tag No.	VEGP-2 Tag No.
Excess Letdown Heat Exchanger	1-1208-E6-002	2-1208-E6-002
Letdown Heat Exchanger	1-1208-E6-003	2-1208-E6-003
Letdown Reheat Heat Exchanger	1-1208-E6-007	2-1208-E6-007

II. Code Requirement:

Table IWC-2500-1, Examination Category C-A (Item C1.20) of the 1989 Edition of ASME Section XI requires a volumetric examination, and Examination Category C-B (Item C2.11) requires a surface examination.

III. Code Requirement from Which Relief is Requested:

Relief is requested to exclude the components cited above from the required surface and volumetric examinations as allowed in IWC-1220, "Components Exempt From Examination," in the 1989 Addenda (including subsequent editions and addenda) of ASME Section XI and ASME Code Case N-408-2 which has been endorsed for general use in Revision 9 of Regulatory Guide 1.147. A copy of the aforementioned code case is provided as Attachment 1 to this request for relief.

(continued)

IV. Basis for Relief:

Subarticle IWC-1220 of the 1989 Addenda of ASME Section XI allowed the exemption of selected components from the surface and volumetric examination requirements of IWC-1220. The 1996 Addenda of ASME Section XI also includes these exemptions in IWC-1220. The NRC granted these exemptions to VEGP in the first interval through correspondence dated March 8, 1996, and August 13, 1996, for VEGP-1 and 2, respectively. (Reference First Ten-Year Interval Request for Relief RR-62 for VEGP-1 and 2.)

V. Alternate Examination:

These exemptions exclude the applicable vessels from the surface and volumetric examinations required by IWC-2500. The remainder of the Code-required examinations (i.e., pressure tests) would be performed to assure that an acceptable level of safety and quality is maintained for the applicable components.

VI. Justification for Granting Relief:

These exemptions will be allowed when the newer Addenda and Editions of the Code are authorized in 10 CFR 50.55a. SNC sees no benefit in performing examinations on components which the Code has determined can be exempted. The other requirements in the Code are therefore acceptable to assure an acceptable level of safety or quality. It is impractical to perform examinations which do not provide a compensating increase in the level of safety or quality.

VII. Implementation Schedule:

This request for relief is applicable to the Second Ten-Year Interval which commenced May 31, 1997.

(Note: This is a revised request for relief. The original was approved in Safety Evaluation dated December 31, 1998, TAC Numbers M98977, M98978, MA3364, and MA3365.)

CASE

N-408-2

CASES OF ASME BOILER AND PRESSURE VESSEL CODE

Approval Date: July 24, 1989

See Numerical Index for expiration and any reaffirmation dates.

Case N-408-2
Alternative Rules for Examination of Class 2 Piping
Section XI, Division 1

Inquiry: When determining the components subject to examination and establishing examination requirements for Class 2 piping under Section XI, Division 1, what alternative exemptions to those stated in IWC-1220 and what alternative examination requirements to those stated in IWC-2500, Category C-F, may be used?

Reply: It is the opinion of the Committee that the following alternative rules may be used for determining components subject to examination and for establishing examination requirements for Class 2 piping under Section XI, Division 1.

(a) The following components (or parts of components) of RHR, ECC, and CHR systems (or portions of systems)[1] are exempt from the volumetric and surface examination requirements of IWC-2500:

(1) piping NPS 4 and smaller in all systems except high pressure safety injection systems of pressurized water reactor plants;

(2) vessels, pumps, and valves and their connections in piping[2] NPS 4 and smaller in all systems except high pressure safety injection systems of pressurized water reactor plants;

(3) piping NPS 1½ and smaller in high pressure safety injection systems of pressurized water reactor plants;

(4) vessels, pumps, and valves and their connections in piping[2] NPS 1½ and smaller in high pressure safety injection systems of pressurized water reactor plants;

(5) vessels, piping, pumps, valves, other components, and component connections of any size in statically pressurized, passive (i.e., no pumps) safety injection systems[3] of pressurized water reactor plants;

(6) piping and other components of any size beyond the last shutoff valve in open ended portions of systems that do not contain water during normal plant operating conditions.[4]

(b) The following components (or parts of components) of systems (or portions of systems) other than RHR, ECC, and CHR systems are exempt from the volumetric and surface examination requirements of IWC-2500:

(1) piping NPS 4 and smaller;

(2) vessels, pumps, and valves and their connections in piping NPS 4 and smaller;

(3) vessels, piping, pumps, valves, other components, and component connections of any size in systems or portions of systems that operate (when the system function is required) at a pressure equal to or less than 275 psig and at a temperature equal to or less than 200°F;

(4) piping and other components of any size beyond the last shutoff valve in open ended portions of systems that do not contain water during normal plant operating conditions.[4]

(c) For welds in austenitic stainless steel or high alloy piping, the requirements of Table 1, Examination Category C-F-1, Pressure Retaining Welds in Austenitic Stainless Steel or High Alloy Piping, shall be used as an alternative to the requirements of Table IWC-2500-1.

(d) For welds in carbon or low alloy steel piping, the requirements of Table 2, Examination Category C-F-2, Pressure Retaining Welds in Carbon or Low Alloy Steel Piping, shall be used as an alternative to the requirements of Table IWC-2500-1.

[1] RHR, ECC, and CHR systems are Residual Heat Removal, Emergency Core Cooling, and Containment Heat Removal systems, respectively.

[2] *In piping* is defined as having a cumulative inlet and a cumulative outlet pipe cross-sectional area neither of which exceeds the nominal OD cross-sectional area of the designated size.

[3] Statically pressurized. passive safety injection systems of pressurized water reactor plants are typically called by such names as accumulator tank and associated system, safety injection tank and associated system, and core flooding tank and associated system.

[4] Normal plant operating conditions include reactor startup, operation at power, hot standby, and reactor cooldown to cold shutdown conditions, but do not include test conditions.

SOUTHERN NUCLEAR OPERATING COMPANY
VOGTLE ELECTRIC GENERATING PLANT, UNITS 1 AND 2
SECOND TEN-YEAR INTERVAL
REQUEST FOR RELIEF NO. RR-21
ATTACHMENT 1
(continued)

Table 1

EXAMINATION CATEGORY C-F-1, PRESSURE RETAINING WELDS IN AUSTENITIC STAINLESS STEEL OR HIGH ALLOY PIPING

Item No.	Parts Examined[1]	Examination Requirements/ Fig. No.[6]	Examination Method	Acceptance Standard[6]	Extent of Examination[2]	Frequency of Examination[5]
C5.10	Piping welds ≥ 3/8 in. nominal wall thickness for piping > NPS 4					
C5.11	Circumferential weld	IWC-2500-7	Surface and volumetric	IWC-3514	100% of each weld requiring examination	Each inspection interval
C5.12	Longitudinal weld	IWC-2500-7	Surface and volumetric	IWC-3514	2.5t - at the intersecting circumferential weld	Each inspection interval
C5.20	Piping welds > 1/5 in. nominal wall thickness for piping ≥ NPS 2 and ≤ NPS 4					
C5.21	Circumferential weld	IWC-2500-7	Surface and volumetric	IWC-3514	100% of each weld requiring examination	Each inspection interval
C5.22	Longitudinal weld	IWC-2500-7	Surface and volumetric	IWC-3514	2.5t - at the intersecting circumferential weld	Each inspection interval
C5.30	Socket welds	IWC-2500-7	Surface	IWC-3514	100% of each weld requiring examination	Each inspection interval
C5.40	Piping branch connections of branch piping ≥ NPS 2					
C5.41	Circumferential weld	IWC-2500-9 to -13, inclusive	Surface	IWC-3514	100% of each weld requiring examination	Each inspection interv
C5.42	Longitudinal weld	IWC-2500-12 and -13	Surface	IWC-3514	2.5t - at the intersecting circumferential weld	Each inspection interva

NOTES:

(1) Requirements for examination of welds in piping ≤ NPS 4 apply to PWR high pressure safety injection systems in accordance with the exemption criteria of this Case.

(2) The welds selected for examination shall include 7.5%, but not less than 28 welds, of all austenitic stainless steel or high alloy welds not exempted by this Case. (Some welds not exempted by this Case are not required to be nondestructively examined per Examination Category C-F-1. These welds, however, shall be included in the total weld count to which the 7.5% sampling rate is applied.) The examinations shall be distributed as follows:

(a) the examinations shall be distributed among the Class 2 systems prorated, to the degree practicable, on the number of nonexempt austenitic stainless steel or high alloy welds in each system (i.e., if a system contains 30% of the nonexempt welds, then 30% of the nondestructive examinations required by Examination Category C-F-1 should be performed on that system);

(b) within a system, the examinations shall be distributed among terminal ends [see Note (3)] and structural discontinuities [see Note (4)] prorated, to the degree practicable, on the number of nonexempt terminal ends and structural discontinuities in that system; and

(c) within each system, examinations shall be distributed between line sizes prorated to the degree practicable.

(3) Terminal ends are the extremities of piping runs that connect to structures, components (such as vessels, pumps, valves), or pipe anchors, each of which acts as a rigid restraint or provides at least two degrees of translational restraint to piping thermal expansion.

(4) Structural discontinuities include pipe weld joints to vessel nozzles, valve bodies, pump casings, pipe fittings (such as elbows, tees, reducers, flanges, etc., conforming to ANSI B16.9), and pipe branch connections and fittings.

(5) The welds selected for examination shall be reexamined during subsequent inspection intervals over the service lifetime of the piping component.

(6) Figure numbers and acceptance standards refer to those in Section XI, Winter 1983 Addenda.

SOUTHERN NUCLEAR OPERATING COMPANY
VOGTLE ELECTRIC GENERATING PLANT, UNITS 1 AND 2
SECOND TEN-YEAR INTERVAL
REQUEST FOR RELIEF NO. RR-21
ATTACHMENT 1
(continued)

* [SNC Note: Table 2, as provided by and received from ASME for Code Case N-408-2, was purposely identified as N-408-1. The table and its contents, as shown below, are believed to be correct and apply to N-408-2.]

Table 2
EXAMINATION CATEGORY C-F-2, PRESSURE RETAINING WELDS IN CARBON OR LOW ALLOY STEEL PIPING

Item No.	Parts Examined[1]	Examination Requirements/ Fig. No.[7]	Examination Method	Acceptance Standard[7]	Extent of Examination [2,4]	Frequency of Examinations[5]
C5.50	Piping welds ≥ 3/8 in. nominal wall thickness for piping > NPS 4					
C5.51	Circumferential weld	IWC-2500-7	Surface and volumetric	IWC-3514	100% of each weld requiring examination	Each inspection interval
C5.52	Longitudinal weld	IWC-2500-7	Surface and volumetric	IWC-3514	2,5t - at the intersecting circumferential weld	Each inspection interval
C5.60	Piping welds > 1/5 in. nominal wall thickness for piping ≥ NPS 2 and ≤ NPS 4					
C5.61	Circumferential weld	IWC-2500-7	Surface and volumetric	IWC-3514	100% of each weld requiring examination	Each inspection interval
C5.62	Longitudinal weld	IWC-2500-7	Surface and volumetric	IWC-3514	2.5t - at the intersecting circumferential weld	Each inspection interval
C5.70	Socket welds	IWC-2500-7	Surface	IWC-3514	100% of each weld requiring examination	Each inspection interval
C5.80	Piping branch connections of branch piping ≥ NPS 2					
C5.81	Circumferential weld	IWC-2500-9 to -13, inclusive	Surface	IWC-3514	100% of each weld requiring examination	Each inspection interval
C5.82	Longitudinal weld	IWC-2500-12 and -13	Surface	IWC-3514	2.5 t - at the intersecting circumferential weld	Each inspection interval

NOTES:

(1) Requirements for examination of welds in piping ≤ NPS 4 apply to PWR high pressure safety injection systems in accordance with the exemption criteria of this Case,
(2) The welds selected for examination shall include 7.5%, but not less than 28 welds, of all carbon and low alloy steel welds not exempted by this Case. (Some welds not exempted by this Case are not required to be nondestructively examined per Examination Category C-F-2. These welds, however, shall be included in the total weld count to which the 7.5% sampling rate is applied.) The examinations shall be distributed as follows:
(a) the examinations shall be distributed among the Class 2 systems prorated, to the degree practicable, on the number of nonexempt carbon and low alloy steel welds in each system (i.e., if a system contains 30% of the nonexempt welds, then 30% of the nondestructive examinations required by Examination Category C-F-2 should be performed on that system);
(b) within a system, the examinations shall be distributed among terminal ends [see Note (3)] and structural discontinuities [see Note (4)] prorated, to the degree practicable, on the number of nonexempt terminal ends and structural discontinuities in that system; and
(c) within each system, examinations shall be distributed between line sizes prorated to the degree practicable.
(3) Terminal ends are the extremities of piping runs that connect to structures, components (such as vessels, pumps, valves), or pipe anchors, each of which acts as a rigid restraint or provides at least two degrees of translational restraint to piping thermal expansion
(4) Structural discontinuities include pipe weld joints to vessel nozzles, valve bodies, pump casings, pipe fittings (such as elbows, tees, reducers, flanges, etc., conforming to ANSI B16.9), and pipe branch connections and fittings.
(5) The welds selected for examination shall be reexamined during subsequent inspection intervals over the service lifetime of the piping component.
(6) For welds in carbon or low alloy steels, only those welds showing reportable preservice transverse indications need to be examined for transverse reflectors.
(7) Figure numbers and acceptance standards refer to those in Section XI, Winter 1983 Addenda.

ENCLOSURE 5
TO
SOUTHERN NUCLEAR OPERATING COMPANY
LETTER LCV-1016-Q

VOGTLE ELECTRIC GENERATING PLANT, UNITS 1 AND 2
SECOND TEN-YEAR INSERVICE INSPECTION PROGRAM
REQUEST FOR RELIEF RR-33

SOUTHERN NUCLEAR OPERATING COMPANY
VOGTLE ELECTRIC GENERATING PLANT, UNITS 1 AND 2
SECOND TEN-YEAR INTERVAL
REQUEST FOR RELIEF NO. RR-33

I. System/Component(s) for Which Relief is Requested:

Regenerative Heat Exchanger (VEGP-1 tag no. 1-1208-E6-001, VEGP-2 tag no. 2-1208-E6-001) welds and component supports.

II. Code Requirement:

The 1989 Edition of the Section XI Code, Table IWC-2500-1, Examination Category C-A, Item No. C1.10 requires a volumetric examination of shell circumferential welds, Item No. C1.20 requires a volumetric examination of head-to-shell welds, Item No. C1.30 requires a volumetric examination of tubesheet-to-shell welds, and Examination Category C-B, Item No. C2.11 requires a surface examination of nozzle-to-shell welds where vessel nominal thickness ≤ 1/2 inch, and Examination Category C-C, Item No. C3.10 requires a surface examination of integrally welded attachments on pressure vessels. Table IWF-2500-1, Category F-A, requires visual, VT-3 examination of component supports. SNC uses Code Case N-491 for supports.

III. Code Requirement from Which Relief is Requested:

Relief is requested from performing the examination of the Regenerative Heat Exchanger welds and component supports.

IV. Basis for Relief:

The Regenerative Heat Exchanger is a Class 2 heat exchanger that is designed to reduce unnecessary heat losses by heating the Reactor Coolant System (RCS) charging flow with the letdown flow. The 3″ charging inlet/outlet lines are connected to the heat exchanger on the tube side, and the 3″ letdown inlet/outlet lines are connected on the shell side. All of the 3″ lines are exempt from non-destructive examinations per IWC-1221(c); however, the heat exchanger requires examination. The examination of the Regenerative Heat Exchanger is considered to constitute an unnecessary hardship without an associated increase in the level of quality and safety. This conclusion is based on the following:

A conservative whole body dose in the range of one to two Rem is a reasonable estimate for examining the Regenerative Heat Exchanger. Dose rate surveys taken during the ninth Unit 1 refueling outage in Mode 6 with water in the heat exchanger indicate a contact dose rate of one-and-one-half to three (1.5 to 3) Rem/hour, a dose rate at one foot away from the heat exchanger of 800 to 1000 MRem/hour, and a general area dose rate of 300 to 600 MRem/hour. Unit 2 dose rates are comparable with those of Unit 1. The estimated stay time to perform the Code-required examinations on the Regenerative Heat Exchanger is one hour. SNC considers this cumulative dose to constitute a hardship with no increase in the level of quality and safety for this system.

The subject welds and piping supports are located on a component where all of the numerous welds and supports on the connecting lines are exempt from non-destructive examination. Not performing the examination of these heat exchanger welds and supports in a system where

(continued)

IV. Basis for Relief (continued):

almost all of the welds and supports do not require examination should have no effect on the level of quality and safety for this system.

V. Alternate Examination:

No alternative examinations will be performed.

VI. Justification for Granting Relief:

The Code requirements, if imposed, present a significant hardship to SNC and would result in radiation exposure that is contrary to the principles of ALARA (As Low As Reasonably Achievable). Further, the inlet and outlet piping are exempt from volumetric and surface examination requirements. SNC concludes that a compensating increase in the level of quality and safety will not be provided by non-destructively examining the Regenerative Heat Exchanger welds and their component supports, since the connecting piping is exempt from nondestructive examinations. The VT-2, visual examination performed during the pressure tests will provide adequate assurance of the operational readiness of the Regenerative Heat Exchanger; therefore, approval is requested per the requirements of 10 CFR 50.55a(a)(3)(ii).

VII. Implementation Schedule:

This request for relief is applicable to the Second Ten-Year Interval which commenced May 31, 1997.

(Note: Request for Relief RR-33 is a new relief request. The Regenerative Heat Exchangers were previously addressed in Request for Relief RR-21, but did not fully address their inlet/outlet piping, shell-related welds, and their supports. As a result, RR-21 was revised to delete reference to the Regenerative Heat Exchangers and new Request for Relief RR-33 was generated to better address these components and their supports on the two Vogtle units.)

ENCLOSURE 6
TO
SOUTHERN NUCLEAR OPERATING COMPANY
LETTER LCV-1016-Q

VOGTLE ELECTRIC GENERATING PLANT, UNITS 1 AND 2
SECOND TEN-YEAR INSERVICE INSPECTION PROGRAM
REQUEST FOR RELIEF RR-34

SOUTHERN NUCLEAR OPERATING COMPANY
VOGTLE ELECTRIC GENERATING PLANT, UNITS 1 AND 2
SECOND TEN-YEAR INTERVAL
REQUEST FOR RELIEF NO. RR-34

I. System/Component for Which Relief is Requested:

Class 2 and 3 pressure-retaining bolted connections in non-borated systems.

II. Code Requirement:

The 1989 Edition of ASME Section XI, IWA-5250(a)(2) requires that if leakage occurs at a bolted connection, the bolting shall be removed, VT-3 visually examined for corrosion, and evaluated in accordance with IWA-3100.

III. Code Requirement from Which Relief is Requested:

Relief is requested from removing bolting from pressure-retaining bolted connections in non-borated systems and performing the required visual examination (VT-3) should leakage be detected during performance of ASME Section XI pressure testing activities.

IV. Basis for Relief

Non-borated systems do not experience the corrosive environment from boric acid residue and are not subjected to the same level of aggressive attack from leakage as borated systems.

When leakage is detected in a non-borated system, the integrity of the bolted connections can typically be adequately assessed without the prescriptive requirement for removal of the bolting. Performing an evaluation, as described in the Alternate Examination, represents a more reasonable approach as opposed to immediately removing all bolting without evaluating the situation. The evaluation will address the cause of leakage, the need for bolt torquing or removal of bolting, and the potential for bolting degradation that could affect joint integrity. The evaluation may conclude that removal of the bolting is not necessary or it may require removal of one or more bolts for further examination. SNC believes that this approach is based on sound engineering principles and will continue to assure that the structural integrity of the bolted connections will be maintained.

V. Alternate Examination:

In lieu of the IWA-5250(a)(2) requirements, SNC may elect to perform an evaluation to determine the appropriate course of action. The evaluation will:

a. Consider the potential for bolting degradation as well as the cause of the leakage,

b. Determine the need for bolt torquing,

(continued)

V. Alternate Examination (continued):

c. Determine the need for removal of bolting for further examination, and

d. Assure that the bolting and component material in the area of leakage is evaluated to assure joint integrity until the next in-place visual examination.

If corrosion is observed at a leaking connection, the evaluation will determine if the corrosion is minor or significant. Minor (cosmetic) corrosion is not uncommon for carbon steel bolting. If the corrosion is deemed significant, SNC proposes to remove the bolt with the most apparent corrosion, perform a VT-1 examination, and evaluate in accordance with IWB-3517.1. If the bolt is deemed unacceptable for continued service, bolts adjacent to unacceptable bolts in the connection shall be removed, examined, and evaluated.

Evaluations shall be documented in writing and maintained in the plant records. The results of these findings will be made available to the regulatory authority having jurisdiction at the plant site. Repairs and/or replacements necessitated by these evaluations will be performed and documented, as required.

VI. Justification for Granting Relief:

For a non-borated environment, performance of the proposed evaluation (when leakage occurs at a bolted connection during a pressure test) will provide reasonable assurance that degradation of bolting will be detected and adequately addressed, thereby providing an acceptable level of quality and safety. Therefore, the proposed alternative should be granted pursuant to 10 CFR 50.55a(a)(3)(i).

VII. Implementation Schedule:

This request for relief is applicable to the Second Ten-Year Interval which commenced May 31, 1997.

(Note: This is a new request for relief. A version of this relief request has been granted for Vogtle's sister SNC plant, Hatch, per NRC SER dated June 16, 1997, re: NRC TAC Numbers M93918 and M93919.)

ENCLOSURE 7
TO
SOUTHERN NUCLEAR OPERATING COMPANY
LETTER LCV-1016-Q

VOGTLE ELECTRIC GENERATING PLANT, UNITS 1 AND 2
SECOND TEN-YEAR INSERVICE INSPECTION PROGRAM
REQUEST FOR RELIEF RR-36

SOUTHERN NUCLEAR OPERATING COMPANY
VOGTLE ELECTRIC GENERATING PLANT, UNITS 1 AND 2
SECOND 10-YEAR INTERVAL
REQUEST FOR RELIEF NO. RR-36

I. System/Component(s) for Which Relief is Requested:

Requirements of Tables IWB-2412-1, IWC-2412-1, IWD-2412-1, and ASME Code Case N-491 Table –2410-2 used in selecting the maximum percentages of examinations credited for each period.

II. Code Requirement:

Tables IWB-2412-1, IWC-2412-1, IWD-2412-1 of the 1989 Edition of ASME Section XI, and ASME Code Case N-491 Table –2410-2 require the following:

Inspection Period, Calendar Years of Plant Service Within the Interval	Minimum Examinations Completed,%	Maximum Examinations Credited,%
3	16	34
7	50	67
10	100	100`

III. Code Requirement from Which Relief is Requested:

Relief is requested from selecting the maximum percentages of examinations credited for each period as required by Tables IWB-2412-1, IWC-2412-1, IWD-2412-1, and ASME Code Case N-491 Table –2410-2. Relief is also requested to use the exceptions found in the 1996 Addenda of the 1995 Edition of ASME Section XI, IWB-2412, IWC-2412, IWD-2412, and IWF-2410.

IV. Basis for Relief:

Code Case N-598 which was approved March 2, 1998 by ASME addresses an alternative to the requirements of Tables IWB-2412-1, IWC-2412-1, IWD-2412-1, and starting with the 1990 Addenda, IWF-2410-2. This same alternative was incorporated into the 1998 Edition of ASME Section XI Code, not as an alternative, but as the code requirement. Southern Nuclear Operating Company (SNC) has approval to use ASME Code Case N-491 in lieu of the selection criteria found in IWF. Therefore, ASME Code Case N-491 Table –2410-2 will be substituted for Table IWF-2410-2 referenced in the ASME Code Case N-598. A copy of Code Case N-598 is provided as Attachment 1 to this request for relief. As for the exceptions, the 1996 Addenda of the 1995 Edition of ASME Section XI containing these exceptions was approved by the NRC in the latest version of 10 CFR 50.55a.

V. Alternate Examination:

Southern Nuclear Operating Company will comply with the requirements of ASME Section XI, Code Case N-598, except Table IWF-2410-2 will be substituted with ASME Code Case N-491 Table –2410-2. In addition, SNC will incorporate the following exceptions:

(a) The required percentage of examinations in each Examination Category shall be completed in accordance with the table contained in ASME Code Case N-598 with the following exceptions:
   (1) Examination Categories B-N-1, B-P, and B-Q;
   (2) examinations partially deferred to the end of an inspection interval, as allowed by Examination Categories B-A, B-D, and B-F;
   (3) examinations deferred to the end of an inspection interval, as allowed by Examination Categories B-A, B-L-1, B-M-1, B-N-2, B-N-3, and B-O;
   (4) examination deferred until disassembly of a component for maintenance, repair/replacement activity, or volumetric examination, as allowed by Examination Categories B-G-1, B-G-2, B-L-2, and B-M-2;
   (5) welded attachments examined as a result of component support deformation under Examination Categories B-K, C-C, or D-A.

If there are less than three items or welds to be examined in an Examination Category, the items or welds may be examined in any two periods, or in any one period if there is only one item or weld, in lieu of the percentage requirements contained in ASME Code Case N-598.

(b) If items or welds are added to the Inspection Program, during the service lifetime of the plant, examinations shall be scheduled as follows:
   (1) When items or welds are added during the first period of an interval, at least 25% of the examinations required by the applicable Examination Category and Item Number for the added items or welds shall be performed during each of the second and third periods of that interval. Alternatively, if deferral of the examinations is permitted for the Examination Category and Item Number, the second period examinations may be deferred to the third period and at least 50% of the examinations required by the applicable Examination Category and Item Number for the added items or welds shall be performed during the third period.
   (2) When items or welds are added during the second period of an interval, at least 25% of the examinations required by the applicable Examination Category and Item Number for the added items or welds shall be performed during the third period of that interval.
   (3) When items or welds are added during the third period of an interval, examinations shall be scheduled in accordance with (a) above.

VI. Justification for Granting Relief:

ASME Code Case N-598 provides an alternative to the Inspection Program B Tables in order to eliminate redundancy and provide more flexibility for scheduling examinations. That Code Case has been evaluated by the ASME Code Committee and has been deemed acceptable. In addition, the proposed exceptions found in the 1996 Addenda of the 1995 Edition of ASME Section XI, IWB-2412, IWC-2412, IWD-2412, and IWF-2410 have been approved by the NRC in the latest version of 10 CFR 50.55a. Thus, an acceptable level of quality and safety will have been achieved and public health and safety will not be affected by allowing the proposed alternative and exceptions in lieu of the Code requirements. Therefore, it is requested that the proposed alternative and exceptions be authorized pursuant to 10 CFR 50.55a(a)(3)(i).

VII. Implementation Schedule:

This request for relief is applicable to the Second Ten-Year Interval which commenced May 31, 1997.

(Note: This is a new request for relief. A version of this relief request has been granted for Vogtle's sister SNC plant, Hatch, per NRC SER dated June 9, 2000, re: NRC TAC Numbers MA6489 and MA6490. It is anticipated that a separate request for relief will be submitted to the NRC for IWE activities at Vogtle. The Inservice Inspection and Containment Inservice Inspection programs are handled separately at Vogtle because different Code editions are used for each program.)

ATTACHMENT 1

CASE N-598

CASES OF ASME BOILER AND PRESSURE VESSEL CODE
Approval Date: March 2, 1998
See Numeric Index for expiration
and any reaffirmation dates.

Case N-598
Alternative Requirements to Required Percentages of Examinations
Section XI, Division 1

Inquiry: What alternatives to the requirements of Tables IWB-2412-1, IWC-2412-1, IWD-2412-1, IWE-2412-1, and, starting with the 1990 Addenda, IWF-2410-2 may be used in selecting the maximum percentages of examinations credited for each period?

Reply: It is the opinion of the Committee that, as an alternative to the requirements of Tables IWB-2412-1, IWC-2412-1, IWD-2412-1, IWE-2412-1, and IWF-2410-2, the following table may be used for the maximum percentages of examinations credited for each period.

Inspection Interval	Inspection Period, Calendar Years of Plant Service Within the Interval	Minimum Examinations Completed, %	Maximum Examinations Credited, %
All	3	16	50
	7	50[1]	75
	10	100	100

NOTE:
(1) If the first period completion percentage for any examination category exceeds 34%, at least 16% of the required examinations shall be performed on the second period.

ENCLOSURE 8
TO
SOUTHERN NUCLEAR OPERATING COMPANY
LETTER LCV-1016-Q

VOGTLE ELECTRIC GENERATING PLANT, UNITS 1 AND 2
SECOND TEN-YEAR INSERVICE INSPECTION PROGRAM
REQUEST FOR RELIEF RR-37

SOUTHERN NUCLEAR OPERATING COMPANY
VOGTLE ELECTRIC GENERATING PLANT, UNITS 1 AND 2
SECOND TEN-YEAR INTERVAL
REQUEST FOR RELIEF NO. RR-37

I. System/Component(s) for Which Relief is Requested:

This request for relief proposes an alternative to the requirements of IWA-7000 when material meeting the definition in IWA-9000 is purchased, exchanged, or transferred between nuclear plant sites.

II. Code Requirement:

Article IWA-7000 of the 1989 Edition of ASME Section XI contains the requirements for Code applicability of replacement items.

III. Code Requirement from Which Relief is Requested:

Relief is requested from the requirements of IWA-7210, and as an alternative, it is proposed that ASME Section XI Code Case N-528 be utilized. A copy of N-528 is provided as Attachment 1 to this request for relief.

IV. Basis for Relief:

Code Case N-528 provides an alternative to the administrative requirements of Section III imposed by IWA-7210. SNC has reviewed the code case and has determined its implementation will substantially reduce nonbeneficial work activities required by IWA-7000.

V. Alternate Examination:

Southern Nuclear Operating Company will comply with the requirements of Code Case N-528 in lieu of IWA-7210.

VI. Justification for Granting Relief:

The ASME Code Committee evaluated the proposed alternatives contained in Code Case N-528 and determined that they are acceptable for replacement activities involving material meeting the definition of IWA-9000. The implementation of Code Case N-528 will not affect the level of quality and safety nor decrease the margin of public health and safety. While the cost savings associated with Code Case N-528 have not been quantified as a Cost Beneficial Licensing Action item, its implementation is consistent with the intent to eliminate nonbeneficial work activities and their associated costs. Therefore, it is requested that the proposed alternative be authorized pursuant to 10 CFR 50.55a(a)(3)(i).

VII. Implementation Schedule:

This request for relief is applicable to the Second Ten-Year Interval which commenced May 31, 1997.

(Note: This is a new request for relief.)

ATTACHMENT 1

CASE
N-528

CASES OF ASME BOILER AND PRESSURE VESSEL CODE

Approval Date: December 12, 1994
See Numeric Index for expiration
and any reaffirmation dates.

Case N-528
Purchase, Exchange, or Transfer of Material Between Nuclear Plant Sites
Section XI, Division 1

Inquiry: As an alternative to the administrative requirements of Section III 1 imposed by IWA-4170 (IWA-7210 in Editions and Addenda prior to the 1991 Addenda), what requirements apply to Owners when material meeting the definition in IWA-9000 is purchased, exchanged, or transferred between nuclear plant sites provided the following requirements are met?

Reply: It is the opinion of the Committee that, as an alternative to the administrative requirements of Section III imposed by IWA-4170 (IWA-7210 in Editions and Addenda prior to the 1991 Addenda), material meeting the definition in IWA-9000 may be purchased, exchanged, or transferred between nuclear plant sites, provided the following requirements are met:

(a) Materials shall have been furnished to the supplying plant in accordance with NA-3700/NCA-3800.

(b) Since receipt by the supplying plant, the material was not placed in service, welded, brazed, nor subjected to any operation that might affect the mechanical properties of the material (e.g., heat treatment or forming).

(c) Documentation required by NA-3700/NCA-3800 shall be provided to the receiving plant with the material.

(d) When the material is fabricated in accordance with specific dimensional requirements in addition to those provided in a national standard (e.g., nonwelded valve bonnet or nonwelded pump casing), the evaluation of suitability required by IWA-4150 (IWA-7220 in Editions and Addenda prior to the 1991 Addenda) shall include an evaluation of the material for its intended application, including any differences that might affect form, fit, or function.

(e) The receiving plant shall obtain certification for the following:

(1) The supplying plant purchased the material in accordance with NA-3700/NCA-3800 and maintained it in accordance with their Quality Assurance Program.

(2) Since receipt by the supplying plant, the material was not placed in service, welded, brazed, nor subjected to any operation that might affect the mechanical properties of the material (e.g., heat treatment or forming).

(f) Use of this Case shall be documented on the NIS-2 for repair or replacement using material obtained in accordance with the provisions of this Case.

[1] Administrative requirements refer to possession of a Certificate of Authorization or Quality System Certificate (Materials).

ENCLOSURE 9
TO
SOUTHERN NUCLEAR OPERATING COMPANY
LETTER LCV-1016-Q

VOGTLE ELECTRIC GENERATING PLANT, UNITS 1 AND 2
SECOND TEN-YEAR INSERVICE INSPECTION PROGRAM
REQUEST FOR RELIEF RR-38

SOUTHERN NUCLEAR OPERATING COMPANY
VOGTLE ELECTRIC GENERATING PLANT, UNITS 1 AND 2
SECOND TEN-YEAR INTERVAL
REQUEST FOR RELIEF NO. RR-38

I. System/Component(s) for Which Relief is Requested:

Class 1 and 2 pressure-retaining components and their supports.

II. Code Requirement:

Paragraph IWA-6230, Summary Report Submittal, of the 1989 Edition of the ASME Section XI Code requires that within 90 days of the completion of the inservice inspection conducted during each refueling outage, the Owner shall file inservice inspection summary reports with the enforcement and regulatory authorities having jurisdiction at the plant site.

III. Code Requirement from Which Relief is Requested:

Relief is requested from filing the inservice inspection summary reports with the enforcement and regulatory authorities. In the case of Vogtle, inservice inspection summary reports are filed *only* with the regulatory authority, i.e., the NRC. No regional or local governing body exists that is empowered to enact and enforce Boiler and Pressure Vessel Code legislation pertaining to Vogtle.

IV. Basis for Relief:

Southern Nuclear Operating Company (SNC) would like to continue with the present trend of reducing unnecessary paperwork in the industry. SNC would like to forego submittal of the summary report to the NRC, yet maintain the document on site for NRC review upon request.

V. Alternate Examination:

No alternate examinations are proposed.

VI. Justification for Granting Relief:

The implementation of ASME Section XI Code Case N-532 is consistent with the NRC's philosophy found in NRC letter SECY-94-093 dated May 10, 1995. Per SECY-94-093, the NRC is to take a proactive role through its representatives in the ASME Code to modify reporting requirements and to eliminate the need to submit inservice inspection reports following each refueling outage. And with implementation of Code Cases N-560, N-577, and N-578 involving Risk-Informed Requirements, vendor Topical Reports, and the utility summary/template, a more streamlined approach is being undertaken to reduce unnecessary staff reviews.

(continued)

VI. Justification for Granting Relief (continued):

The summary reports will continue to be prepared to the requirements of IWA-6220, Preparation. Maintenance of inservice inspection-related records will continue to be performed by SNC to the requirements of IWA-6310, Maintenance of Records. These records will be made available at the plant site for NRC review upon request. This Request for Relief does not apply to other items (e.g., IWA-3100, flaw evaluation disposition) in the Code requiring submittal to the regulatory and enforcement authorities.

The proposed alternative of maintaining the inservice inspection summary report on site for NRC review upon request will provide an acceptable level of quality and safety, while reducing licensee burden. Not submitting the summary report will not lessen the preparation and maintenance of the document. Therefore, it is requested that this alternative be authorized pursuant to 10 CFR 50.55a(a)(3)(i).

VII. Implementation Schedule:

This request for relief is applicable to the Second Ten-Year Interval which commenced May 31, 1997.

(Note: This is a new request for relief.)

ENCLOSURE 10
TO
SOUTHERN NUCLEAR OPERATING COMPANY
LETTER LCV-1016-Q

VOGTLE ELECTRIC GENERATING PLANT, UNITS 1 AND 2
SECOND TEN-YEAR INSERVICE INSPECTION PROGRAM
REQUEST FOR RELIEF RR-39

SOUTHERN NUCLEAR OPERATING COMPANY
VOGTLE ELECTRIC GENERATING PLANT, UNITS 1 AND 2
SECOND TEN-YEAR INTERVAL
REQUEST FOR RELIEF NO. RR-39

I. System/Component(s) for Which Relief is Requested:

All components subject to ultrasonic examination.

II. Code Requirement:

Appendix VII, Article-4000, Paragraph VII-4240, "ANNUAL TRAINING," of the 1989 Edition of the ASME Section XI Code requires that a minimum of ten (10) hours per year of supplemental training be provided to Level I, II, and III nondestructive examination (NDE) personnel. The supplemental training is intended to impart knowledge of new developments, material failure modes, and any pertinent technical topics as determined by the employer.

III. Code Requirement from Which Relief is Requested:

Relief is requested from the requirement of ASME Section XI, 1989 Edition, Appendix VII, Article-4000, Paragraph VII-4240 for a minimum of 10 hours of annual supplemental training for Level I, II, and III NDE personnel.

IV. Basis for Relief:

The 1989 Edition of ASME Section XI, Appendix VII, was developed prior to the requirements for the NDE Performance Demonstration Initiative (PDI). The ASME Section XI Code Committee recognized that with the implementation of ASME Section XI, Appendix VIII, and the PDI, that the requirements of Appendix VII, paragraph VII-4240, did not adequately address the type, extent, and frequency of training required to maintain ultrasonic examination proficiency. Therefore, ASME Section XI Code Case N-583 was developed in response to an inquiry related to training requirements and was subsequently incorporated into Appendix VII of the 1998 Edition of the ASME Section XI Code with 1999 Addenda.

Paragraph 2.4.1.1.1 of Federal Register (Volume 64, No. 183 dated September 22, 1999) contained the following statement, "The NRC had determined that this requirement (*i.e., 10 hours of training on an annual basis - emphasis added for clarification*) was inadequate for two reasons. The first reason was that the training does not require laboratory work and examination of flawed specimens. Signals can be difficult to interpret and, as detailed in the regulatory analysis for this rule making (*i.e., revision of 10 CFR 50.55a to invoke the requirements of the 1995 Edition of the ASME Section XI Code with 1996 Addenda - emphasis added for clarification*), experience and studies indicate that the examiner must practice on a frequent basis to maintain the capability for proper interpretation. The second reason is related to the length of training and its frequency. Studies have shown that an examiner's capability begins to diminish within approximately 6 months if skills are not maintained. Thus, the NRC had determined that 10 hours of annual training is not

IV. Basis for Relief (continued):

sufficient practice to maintain skills, and that an examiner must practice on a more frequent basis to maintain proper skill levels. The PDI program has adopted a requirement for 8 hours of training, but it is required to be hands-on practice. In addition, the training must be taken no earlier than 6 months prior to performing examinations at a licensee's facility. PDI believes that 8 hours will be acceptable relative to an examiner's abilities in this highly specialized skill area because personnel can gain knowledge of new developments, material failure modes, and other pertinent topics through other means. Thus, the NRC has decided to adopt in the Final Rule (*i.e., the rule making involving 10 CFR 50.55a in which NRC approval of the ASME Section XI Code is updated to the 1995 Edition with 1996 Addenda ---emphasis added for clarification*) the PDI position on this matter. These changes are reflected in 10 CFR 50.55a(b)(2)(xiv)."

The September 22, 1999, version of 10 CFR 50.55a(b)(2) states: "Appendix VIII personnel qualification. All personnel qualified for performing ultrasonic examinations in accordance with Appendix VIII shall receive 8 hours of annual hands-on training on specimens that contain cracks. This training must be completed no earlier than 6 months prior to performing ultrasonic examinations at a licensee's facility."

Code Case N-583 responded to an inquiry related to an alternative to the annual training requirements of Appendix VII-4240. The reply states "... supplemental practice may be used to maintain UT personnel examination skills. Personnel shall practice UT techniques by examining or by analyzing prerecorded data from materials or welds containing flaws similar to those that may be encountered during inservice examinations. This practice shall be at least 8 hr per year and shall be administered by an NDE Instructor or Level III; no examinations required."

V. Alternate Examination:

Southern Nuclear Operating Company (SNC) proposes to use the alternative annual NDE personnel training requirements defined in ASME Section XI Code Case N-583 instead of the annual supplemental training requirements found in Appendix VII, paragraph VII-4240. A copy of Code Case N-583 is provided as Attachment 1 to this request for relief.

VI. Justification for Granting Relief:

Pursuant to 10 CFR 50.55a (a)(3)(i), SNC requests approval to use the alternative annual NDE personnel training requirements defined in ASME Section XI, Code Case N-583. Effective May 22, 2000, the requirements of ASME Section XI, 1995 Edition and 1996 Addenda, Appendix VIII are applicable for inservice inspection (ISI) at all nuclear electric generating plants within the United States. The Appendix VIII requirements will be implemented at Plant Vogtle via the industry PDI. Implementation of Appendix VIII, via the PDI, provides for more stringent requirements for qualification and demonstration of personnel, equipment, and procedures utilized for ISI.

The application of Code Case N-583, in conjunction with the requirements for ASME Section XI, Appendix VIII, will provide adequate assurance that Level I, II, and III NDE personnel receive sufficient supplemental practice to maintain their ultrasonic examination skills. Therefore, use of the proposed alternative as discussed herein is warranted pursuant to 10 CFR 50.55a(a)(3)(i). The alternative use of Code Case N-583, in conjunction with the 1995 Edition, 1996 Addenda of ASME Section XI, Appendix VIII, provides an acceptable level of quality and safety.

VII. Implementation Schedule:

This request for relief is applicable to the Second Ten-Year Interval which commenced May 31, 1997.

(Note: This is a new request for relief.)

ATTACHMENT 1

CASE
N-583

CASES OF ASME BOILER AND PRESSURE VESSEL CODE

Approval Date: August 14, 1997
See Numeric Index for expiration
and any reaffirmation dates.

Case N-583
Annual Training Alternative
Section XI, Division 1

Inquiry: What alternative to the annual training requirements of Appendix VII-4240 may be used?

Reply: It is the opinion of the Committee that, as an alternative to the requirements of Appendix VII-4240, supplemental practice may be used to maintain UT personnel examination skills. Personnel shall practice UT techniques by examining or by analyzing prerecorded data from material or welds containing flaws similar to those that may be encountered during inservice examinations. This practice shall be at least 8 hr per year and shall be administered by an NDE Instructor or Level III; no examination is required.