UPDATED SAFETY ANALYSIS REPORT

NINE MILE POINT NUCLEAR STATION — UNIT 2

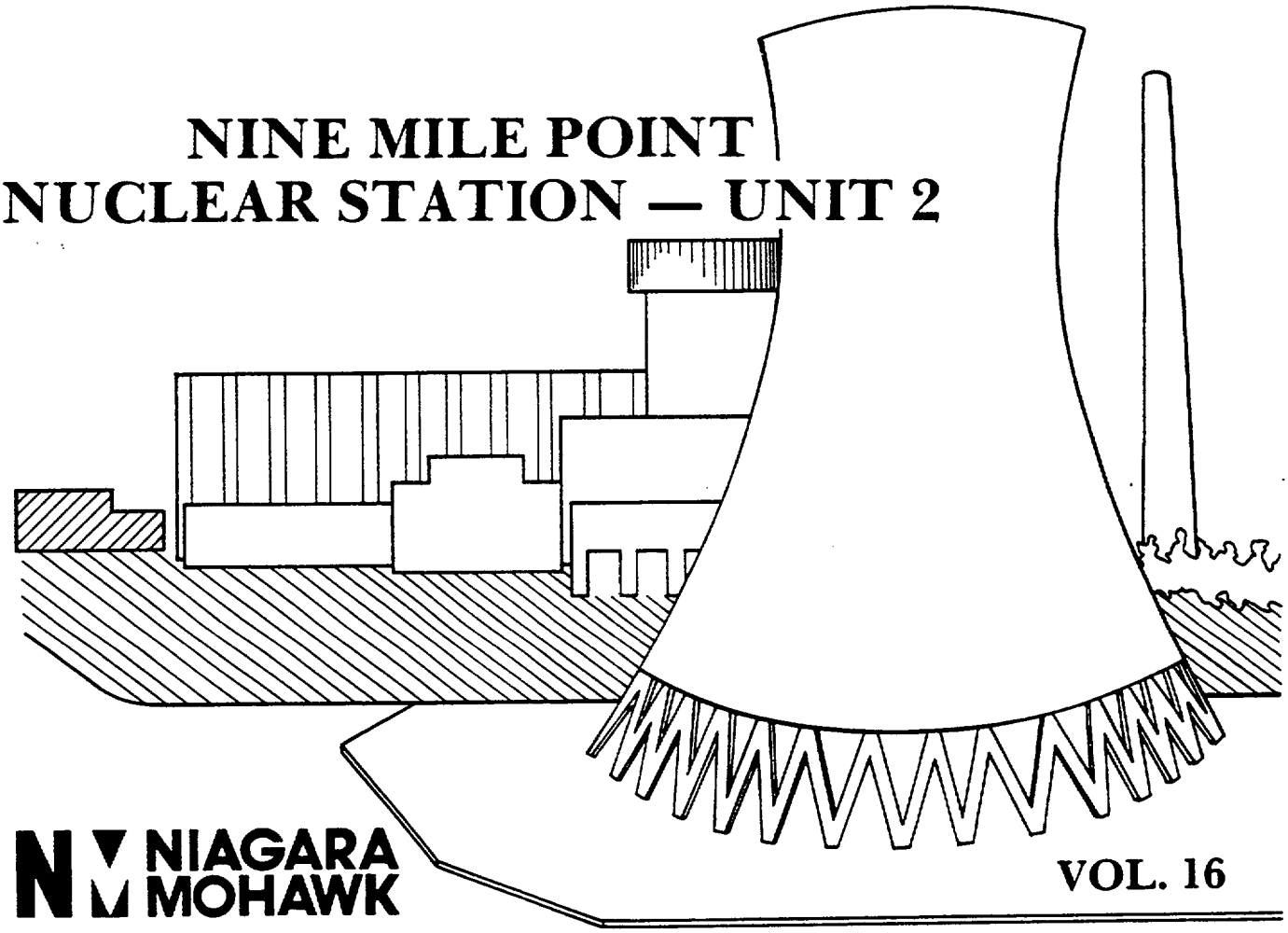

NIAGARA MOHAWK

VOL. 16

analog indicators, indicating lamps, annunciators, and status lights located in control room and locally at the equipment.

Paragraph 4.10 The explosive valves may be tested during plant shutdown. The explosive valve control circuits are continuously monitored and loss of continuity is indicated in the control room. The remainder of the SLCS may be tested during normal operation to verify that each element is capable of performing its function.

Paragraph 4.11 There are two redundant discharge pumps so that one pump may be removed from service during normal plant operation.

Paragraph 4.12 The SLCS has no function during normal plant operation.

Paragraph 4.13 Removal of components from service is annunciated in the control room.

Paragraph 4.14 Removal of components from service during normal plant operation is under administrative control.

Paragraph 4.15 There are no multiple setpoints.

Paragraph 4.16 Upon SLCS initiation, the squib valves fire and remain open, the tank discharge valves open, and the SLCS injection pumps start. The tank discharge valves can be closed and the pumps stopped either by manual action or automatically when the storage tank level drops below a setpoint.

Paragraph 4.17 The SLCS can be manually initiated.

Paragraph 4.18 The control circuits, discharge pump, pump motors, and MOVs are accessible for test and service.

Paragraph 4.19 The explosive valve status once fired is indicated in control room.

Paragraph 4.20 The discharge pressure of sodium pentaborate solution, storage tank level, and pump suction MOVs status are indicated in control room.

Paragraph 4.21 The control circuits, pumps, and pump motors may be repaired or replaced during normal plant operation.

Paragraph 4.22 All controls and instrumentation are clearly identified by nameplates.

7.4.2.2.3.2 Conformance to IEEE-338-1971

The design of the SLCS system permits periodic testing of the system from initiation to actuated devices except explosive

valves. The explosive valve control circuit is continuously monitored and annunciated in control room.

7.4.2.2.3.3 Conformance to IEEE-379-1972

See Section 7.4.2.1.3, IEEE-279, Paragraph 4.2.

7.4.2.2.4 Conformance to Regulatory Guides

The regulatory guides that apply to the SLCS are specified in Table 7.1-3. The following conformance discussions apply specifically to the SLCS. Refer to Section 7.1.2.3 for conformance discussions applying generically to all safety-related systems.

Regulatory Guide 1.22 While this regulatory guide is not a design basis, the SLCS is fully testable from initiation to actuated devices, except for the squib valves, during normal operation.

Regulatory Guide 1.47 The continuity of the explosive valve circuit is continuously monitored and is indicated in the control room. The level and temperature of the sodium pentaborate are monitored with the high and low levels and high and low temperature conditions annunciated in control room. The removal of all other equipment for servicing is administratively controlled.

Regulatory Guide 1.53 See Section 7.4.2.2.3, IEEE-279, Paragraph 4.2.

While this regulatory guide is not a design basis, the following defines the SLCS conformance with the regulatory guide:

Position C.1 SLCS is a special event capability backup system, not an ESF system. Therefore, the SLCS is not required to meet the single-failure criterion at the system level. The two separate and independent control loops of the SLCS use a common supply tank and share a portion of the injection piping into the reactor. However, each loop has its own divisional power, SLCS pump, explosive injection valve, tank discharge valve, and associated controls. A detailed system description is provided in Section 7.4.1.2.

Position C.2 The SLCS is fully testable.

Position C.3 Independent and separate control switches are provided for control of the redundant components in each loop of the SLCS. No switch supplies signals to redundant loops.

Position C.4 Under special shutdown conditions, the SLCS is functionally redundant to the CRD system in achieving and maintaining the reactor subcritical. The SLCS is separated both physically and electrically from the CRD system. Thus, it is not

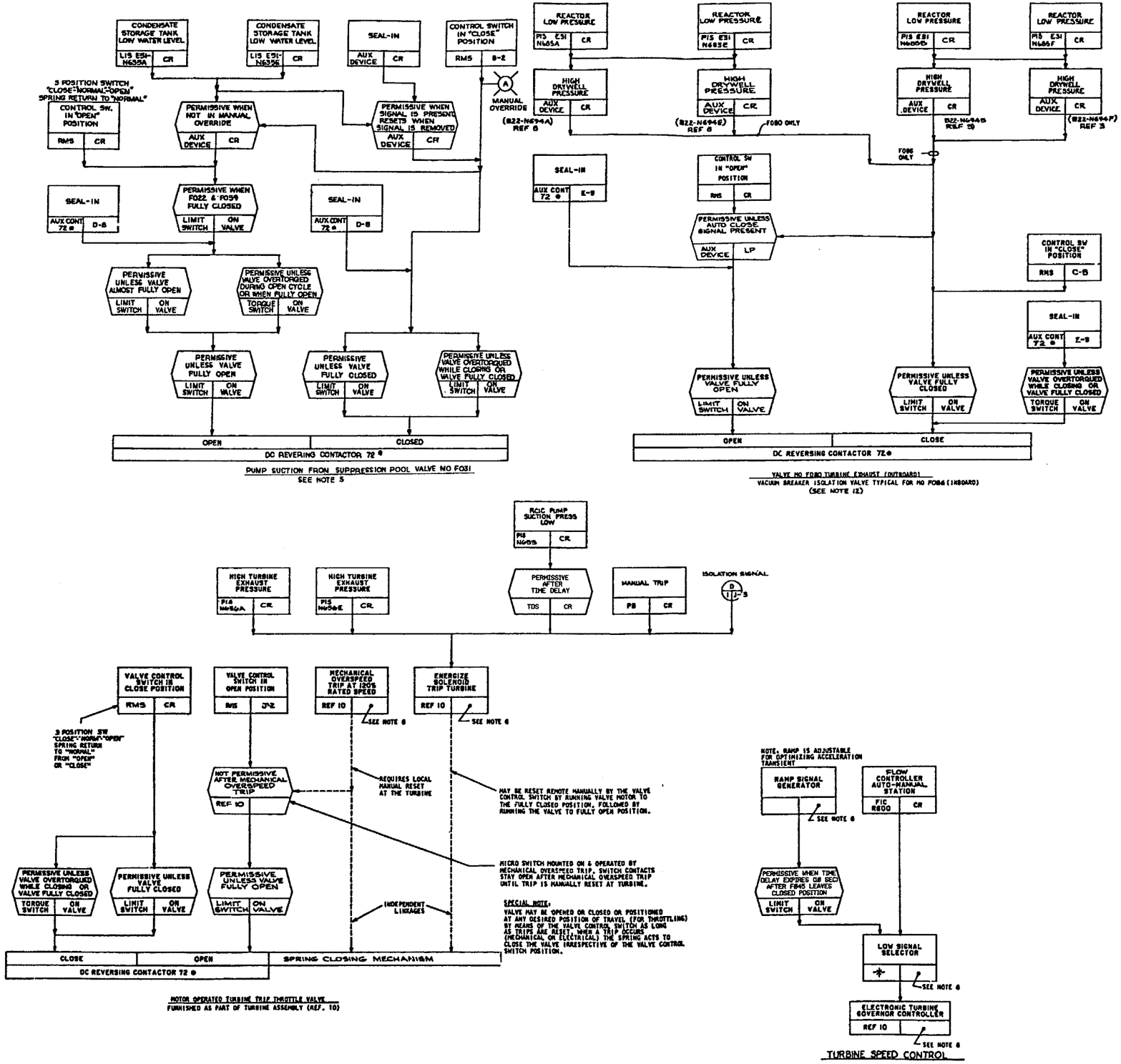

SOURCE: 0007.245-001-033

FIGURE 7.4-1

RCIC FCD
SHEET 4 OF 6

NIAGARA MOHAWK POWER CORPORATION
NINE MILE POINT-UNIT 2
UPDATED SAFETY ANALYSIS REPORT

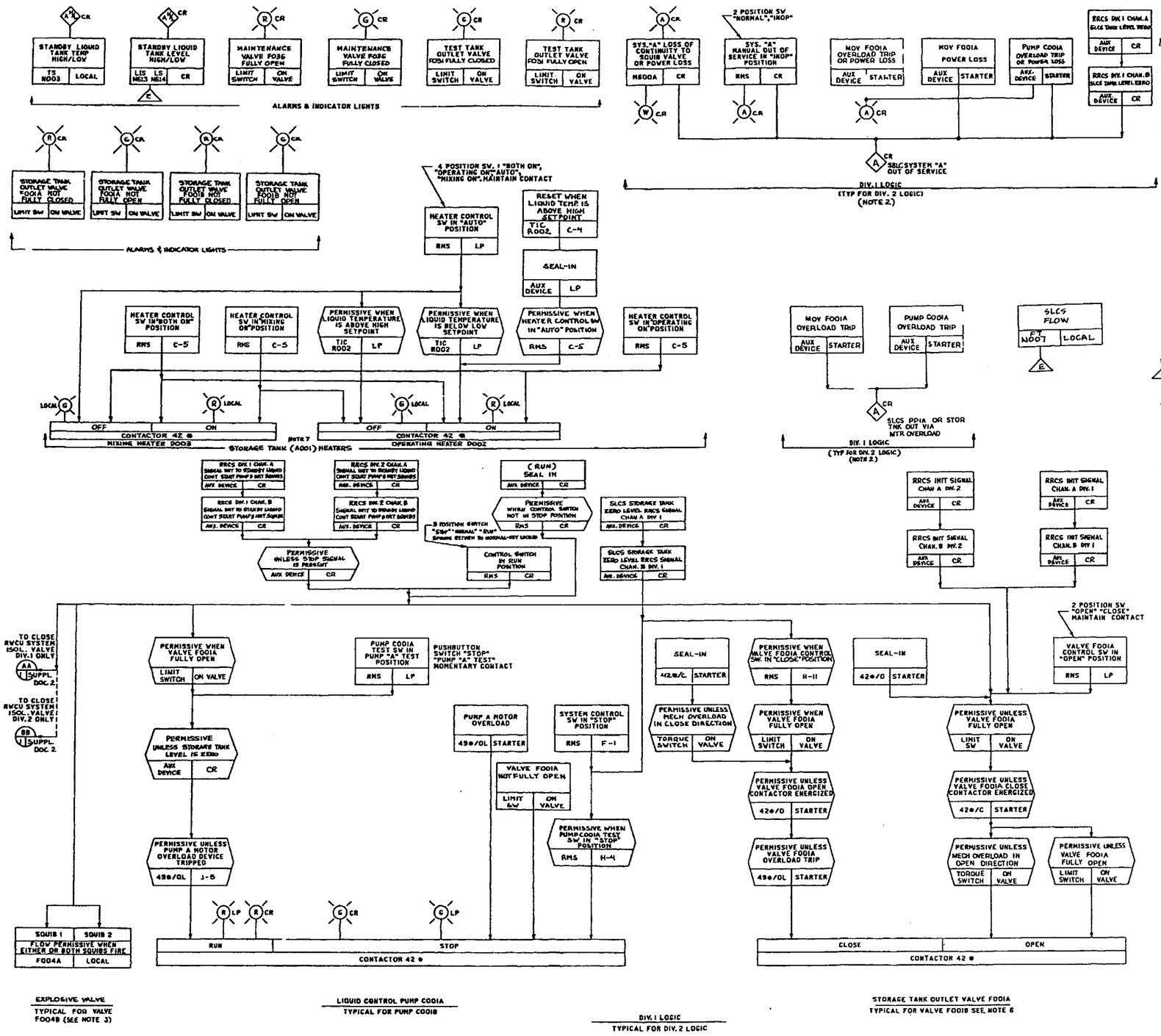

MPL NO. C41-1030

NUCLEAR SAFETY RELATED

NOTES:

1. EACH SYSTEM CONTROL SWITCH IS KEYLOCKED IN "STOP" POSITION.
2. LAMP COLORS SHOWN ON SYSTEM ELEMENTARY C41-1060
3. CONTINUITY MONITOR SHALL BE CURRENT LIMITED AND WIRED TO PREVENT ACCIDENTAL FIRING OF EXPLOSIVE VALVES.
4. AUXILIARY RELAYS AND DEVICES NOT SHOWN.
5. DELETE
6. SYSTEM ELECTRICAL POWER SHALL BE POWERED FROM DIV 1 & DIV 2 BUSES WITH PUMP C41-C001A VALVE C41-F001A AND VALVE C41-F004A ON A DIFFERENT BUS THAN PUMP C41-C001B, VALVE C41-F001B AND C41-F004B.
7. MIXING AND OPERATING HEATERS ARE NOT FUNCTIONALLY REDUNDANT AND THUS EMPLOY NON-DIVISIONAL LOGIC & POWER.
8. DELETE

LEGEND:

⊕ = SWITCHGEAR DEVICE FUNCTION NUMBER ANSI SPEC C37.2.

E = EMERGENCY RESPONSE INFORMATION SYSTEM

SUPPLEMENTAL DOCUMENTS UNDER THE FOLLOWING IDENTITIES ARE TO BE USED IN CONJUNCTION WITH THIS DRAWING.

	REFERENCE DESIGNATOR
1. LOGIC SYMBOLS	A42-1030
2. REACTOR WATER CLEANUP, FCD	G33-1020
3. ENERG TEST AND INFO SYS (ELEM DIAG)	C60-1050

SOURCE: 0007.223-001-008

FIGURE 7.4-2

SBLC FCD

NIAGARA MOHAWK POWER CORPORATION
NINE MILE POINT-UNIT 2
UPDATED SAFETY ANALYSIS REPORT

7.5 SAFETY-RELATED DISPLAY INSTRUMENTATION

7.5.1 Description

7.5.1.1 General

This section describes the instrumentation that provides information to the Operator to enable him to assess the status of safety-related systems and the need to perform required safety functions.

Select SRDI located in the main control room is listed in Table 7.5-1 which tabulates Operator information displays for the various systems described in Sections 7.2, 7.3, 7.4, and 7.6. The safety parameter display system (SPDS) is further discussed in Section 1.10, Task I.D.2.

The instrumentation and ranges shown in Table 7.5-1 are selected to provide the RO with the necessary information to perform normal plant operations and the capability to track process variables pertinent to safety following DBAs.

The power sources to the instrumentation described in this section are discussed in Chapter 8. The following information is provided to the Main Control Room Operator to monitor reactor conditions and allow assessment of safety system status following a DBA.

7.5.1.1.1 Transmitter/Trip Unit Main Control Room Indication

The plant protection system electronic trip system provides continuous main control room indication of each variable monitored by the RPS, ESF, and RCIC systems. Each variable is sensed by an analog transmitter that continually transmits a signal, proportional to the variable range, to a trip unit located in the main control room. A meter located on each master trip unit displays the transmitted signal. The meter allows visual cross-checking between instrument channels to verify operability and variable level. All trip units display trip status using an indicator light.

The trip units used at Unit 2 are those described in the GE Topical Report NEDO-21617, "Analog Transmitter/Trip Unit System for Engineered Safeguard Sensor Trip Input."

The master trip unit receives its signal directly from its transmitters and displays that transmitted signal. The slave trip unit does not receive a direct signal. The signal received by the slave trip unit goes through the master trip unit. The slave trip unit does not have a display to show this transmitted signal.

7.5.1.1.2 Reactor Water Level

Unit 2 is provided with analog water level measurement instrumentation. Reactor water level is recorded on two multichannel recorders. One channel on each recorder records water level and the other records reactor pressure (Section 7.5.1.1.3).

Wide-range water level signals to the two recorders are transmitted from level transmitters in the nuclear boiler instrumentation system.

The reactor water level common reference is discussed in Section 1.10, Task II.K.3.27.

7.5.1.1.3 Reactor Pressure

Two reactor pressure signals are transmitted from two independent differential pressure transmitters and are recorded on two multichannel recorders. One channel on each recorder records pressure and the other records the wide range level (Section 7.5.1.1.2).

7.5.1.2 Reactor Shutdown Indication

The following information is provided to the main control room Operator to monitor reactor shutdown:

1. Control rod status lights indicate each rod fully inserted and control rod scram pilot valve position status lights indicate open valves.

2. Neutron monitoring power range channels and recorders downscale.

3. Annunciators for RPS variables and trip logic in the tripped state.

4. The (nonsafety-related) plant computer logs trip and control rod position and provides thermal-hydraulic information to the Operator that he uses to keep the plant operating within Technical Specification limits.

7.5.1.3 Primary Containment and Reactor Vessel Isolation Indication

The following information is provided to the main control room Operator to monitor the integrity of the primary containment:

1. Isolation valve position lamps indicating valve closure.

2. Main steam line flow indication.

3. Annunciators for the primary containment and reactor vessel isolation system variables and trip logic in the tripped state.

4. Plant computer logging of trips.

7.5.1.4 ECCS and RCIC Indication

The following information is provided to the Main Control Room Operator to monitor ECCS and RCIC system status:

1. Annunciators for HPCS, LPCS, RHR, ADS, and RCIC variables and trip logic in the trip state.

2. Flow and/or pressure indications for each ECCS and RCIC.

3. ECCS and RCIC valve position indication.

4. Plant computer logging of trips in the ECCS and RCIC.

5. Relief valve discharge pipe temperature monitors.

7.5.1.5 Other Systems Indications

Information on other systems is provided to the Main Control Room Operator to monitor the status of these systems (Table 7.5-1). This information is provided by indicators, recorders, and meters for monitoring the various system parameters; indicating lights for monitoring position of valves, vents, dampers, etc., or for indication of energized or de-energized equipment; and status lights for indication of equipment inoperability or off-normal condition. Annunciators and computer monitoring of various system variables are also provided. These additional systems are:

1. Primary containment atmosphere monitoring system.

2. SWP system.

3. CGCS system (DBA hydrogen recombiners).

4. SGTS system.

5. Reactor building HVAC system.

6. Control building HVAC system.

7. Control building chilled water system.

8. Standby power system.

9. Diesel generator building HVAC system.

10. Service water pump bays ventilating system.

11. Fuel pool cooling system.

12. Radiation monitoring system.

13. Instrument air system (IAS).

14. Feedwater system (feedwater isolation valves/PCRVICS).

15. Reactor building floor drains system (used for LDS).

16. Reactor building equipment drains system (used for LDS).

17. Main steam SRVs, vents, and drains system.

18. RWCU system.

19. Reactor plant component cooling water system.

20. Fire protection system.

21. Main steam system (MSIVs/PCRVICS).

Table 7.5-1 is applicable to the standby diesel generator fuel oil system in that the out-of-service status light is listed.

7.5.2 Analysis

The SRDI provides adequate information to allow the RO to perform the necessary manual safety functions during normal operation, transients, and accident conditions.

1. Normal Operation The information channel ranges and indicators were selected to give the RO the information necessary to perform all the normal plant startup and steady-state maneuvers, and to be able to track all the process variables pertinent to safety.

2. Abnormal Transient Occurrences The ranges of indicators and recorders provided are capable of covering the extremes of process variables and provide adequate information for all abnormal transient events.

3. Accident Conditions Information readouts are designed to accommodate all credible accidents for Operator actions, information, and event tracking requirements, and cover all other design basis events or incident requirements. Instrumentation for accident monitoring is further discussed in Section 1.10, Task II.F.1.

4. Postaccident Monitoring The following SRDI is in compliance with safety-related system requirements (Section 7.1.2) and provides information to the Operator after a DBA-LOCA for monitoring plant conditions.

   a. Reactor Water Level and Pressure Reactor water level and reactor pressure sensor instrumentation described in Sections 7.5.1.1.2 and 7.5.1.1.3, respectively, is redundant, electrically independent, and qualified to be operable during and after a LOCA in conjunction with a SSE. Power is from independent instrument buses supplied from the two divisional ac buses. This instrumentation complies with the independence and redundancy requirements of IEEE-279-1971 and provides recorded outputs.

      The reactor water level and pressure sensors are mounted on four independent local panels. The sensors and recorders are designed to operate during normal operation and/or postaccident environmental conditions. The design criteria that the instruments must meet are discussed in Section 7.1.2. There are two complete and independent channels of wide-range reactor water level and reactor vessel pressure, with each channel having its readout on a separate two-pen recorder or water level indicator.

      The design, considering the accuracy, range, and quality of the instrumentation, is adequate to provide the Operator with accurate reactor water level and reactor pressure information during normal operation, abnormal, transient, and accident conditions.

      The Division 1 and 2 recorders are located on the reactor core cooling control board in the main control room.

   b. Suppression Pool Water Level and Temperature The sensors and indicators/recorders are designed to operate during normal operation and during accident conditions. This instrumentation complies with the requirements of IEEE-279-1971 and provides recorded outputs.

      Division I indicators are located on the reactor core cooling control board in the main control room. Division II recorders are located on the postaccident monitoring panel in the main control room. Additional suppression pool water level indicators for postaccident monitoring will be

provided in accordance with Task II.F.1.5 in Section 1.10.

c. Drywell and Suppression Chamber Pressure This instrumentation is redundant, electrically independent, and qualified to be operable during and after a LOCA. Power is from independent buses and the instrumentation complies with the requirements of IEEE-279-1971 and provides recorded outputs.

Division I indicators are located on the reactor core cooling control board in the main control room. Division II recorders are located on the postaccident monitoring panel in the main control room. Additional suppression chamber pressure indicators for postaccident monitoring will be provided in accordance with Task II.F.1.4 in Section 1.10.

d. Radiation Monitoring Primary containment atmosphere radiation monitors (indicators and recorders) are provided on the process and area radiation monitoring panel in the main control room. Additional monitors for postaccident monitoring will be provided in accordance with Task II.F.1.1 in Section 1.10.

RHR service water radiation monitors (indicators and recorders) are provided for postaccident monitoring and are located on the process and area radiation monitoring panel in the main control room.

Main stack and radwaste reactor building ventilation noble gas effluent radiation monitors for post-accident monitoring will be provided in accordance with Task II.F.1.1 in Section 1.10. Sampling and analysis of plant iodine and particulate effluents will be provided for post-accident monitoring in accordance with Task II.F.1.2 of NUREG-0737.

e. Primary Containment Hydrogen and Oxygen Concentration

Division I indicators are located on the reactor core cooling control board in the main control room. Division II recorders are located on the postaccident monitoring panel in the main control room. Additional primary containment hydrogen concentration monitors for postaccident monitoring will be provided in accordance with Task II.F.1.6 in Section 1.10.

TABLE 7.5-1

SAFETY-RELATED DISPLAY INSTRUMENTATION

System	Parameter	Type Readout	Number of Channels	Range
Nuclear boiler	Reactor vessel pressure	Recorder	2	0 - 1,500 psig
	Reactor vessel water level	Recorder	2	-5 to 205" W. G.
RCIC	RCIC flow	Meter	1	0 - 800 gpm
	RCIC discharge pressure	Meter	1	0 - 1,500 psig
Emergency core cooling	HPCS flow	Meter	1	0 - 10,000 gpm
	HPCS discharge pressure	Meter	1	0 - 1,500 psig
	LPCS flow	Meter	1	0 - 10,000 gpm
	RHR flow (LPCI and shutdown cooling)	Meter	3	0 - 10,000 gpm
	RHR service water flow	Meter	2	0 - 10,000 gpm
Primary containment atmosphere monitoring	Drywell pressure (normal range)	Indicator Recorder	2 1	-5 - +5 psig -5 - +5 psig
	Drywell pressure (expanded range)	Indicator Recorder	1 1	0 - 150 psig 0 - 150 psig
	Suppression chamber pressure	Indicator Recorder	1 1	0 - 150 psig 0 - 150 psig
	Suppression chamber temperature	Recorder	2	50 - 350°F
	Drywell temperature	Recorder	4	50 - 350°F
	Suppression pool level (expanded range)	Indicator Recorder	1 1	192 - 217' 192 - 217'
	Suppression pool level (normal range)	Indicator	2	198 - 202'
	Primary containment H_2 concentration	Indicator Recorder	1 1	0 - 30% 0 - 30%
	Drywell area highest temperature	Indicator	2	50 - 350°F
	Drywell area lowest temperature	Indicator	2	50 - 350°F
	Suppression chamber area highest temperature	Indicator	2	50 - 350°F

TABLE 7.5-1 (Cont'd.)

System	Parameter	Type Readout	Number of Channels	Range
	Suppression chamber area lowest temperature	Indicator	2	50 - 350°F
	Suppression pool water temperature	Indicator Recorder	4 4	50°F - 250°F 50°F - 250°F
	Primary containment O_2 concentration	Indicator Recorder	1 1	0 - 10% 0 - 10%
	Inoperability	Status lights	34	N/A
	Drywell isolation valves position	Indicating lights	24	N/A
	Containment atmosphere monitoring sampling valve position	Indicating lights	10	N/A
	Instrument isolation valves position	Indicating lights	4	N/A
Service Water	SW pump suction pressure	Indicator	6	0 - 20 psig
	SW pump discharge header pressure	Indicator	2	0 - 100 psig
	SW discharge header temperature	Indicator	2	35°F - 130°F
	SW pump discharge flow	Indicator	6	0 - 12,000 gpm
	SW header flow to lake	Indicator	2	0 - 35,000 gpm
	SW header to circulating water system flow	Indicator	2	0 - 25,000 gpm
	SW valves position	Indicating lights	29	N/A
	SW isolation valves position	Indicating lights	9	N/A
	Low flow indication for SW header	Status lights	2	N/A
	Inoperability	Status lights	45	N/A
	SW pumps status	Indicating lights	6	N/A
	Control building chiller condensing water pump status	Indicating lights	2	N/A
	Intake shaft gate position	Indicating lights	2	N/A
	Intake/screenwell level equalizer gate position	Indicating lights	2	N/A

TABLE 7.5-1 (Cont'd.)

System	Parameter	Type Readout	Number of Channels	Range
	Intake tunnel bar rack heaters status	Indicating lights	4	N/A
Combustible gas control (DBA hydrogen recombiners)	Inoperability	Status lights	22	N/A
	H_2 recombiner inlet pressure	Indicator	2	0 - 50 psia
	H_2 recombiner through gas flow	Indicator	2	0 - 200 scfm
	H_2 recombiner cooling water valve position	Indicating lights	6	N/A
	Blower inlet temperature	Indicator	2	100°F - 400°F
	Heater wall temperature	Indicator	2	500°F - 1800°F
	Reaction chamber shell temperature	Indicator	2	500°F - 1800°F
	Return gas temperature	Indicator	2	100°F - 400°F
	Reaction chamber temperature	Indicator	2	75°F - 1800°F
	Reaction chamber inlet temperature	Indicator	2	60°F - 300°F
	Heat gas temperature	Indicator	2	500°F - 1800°F
	Heater outlet gas temperature	Indicator	2	500°F - 1800°F
	H_2 recombiner isolation valves position	Indicating lights	14	N/A
	H_2 recombiner reaction chamber red indicating lights for STARTUP, READY, and OPERATE status	Indicating lights	6	N/A
Standby gas treatment	Reactor building differential pressure	Indicator	2	-3 - +3 in W. G.
	SGTS filter differential pressure	Recorder	2	0 - 100%
	SGTS filter train air flow	Recorder	2	0 - 100%
	SGTS filter train electric heater inlet temperature	Indicator	2	0°F - 250°F

TABLE 7.5-1 (Cont'd.)

System	Parameter	Type Readout	Number of Channels	Range
	SGTS filter train electric heater outlet temperature	Indicator	2	0°F - 250°F
	SGTS valves position	Indicating lights	10	N/A
	Primary containment purge to SGTS isolation valve position	Indicating lights	2	N/A
	Filter train fan status	Indicating lights	2	N/A
	Inoperability	Status lights	20	N/A
Reactor building HVAC	Reactor building HVAC isolation damper position	Indicating lights	6	N/A
	Auxiliary filter damper position	Indicating lights	1	N/A
	Reactor building HVAC ventilation dampers position	Indicating lights	4	N/A
	Inoperability	Status lights	16	N/A
	Emergency ventilation recirculation unit coolers status	Indicating lights	2	N/A
	Unit coolers status	Indicating lights	35	N/A
	SW to emergency vent unit cooler valve position	Indicating lights	2	N/A
Primary containment purge	Purge isolation valves position	Indicating lights	14	N/A
	Amber indication for primary containment manual isolation	Indicating lights	2	N/A
Control building HVAC	Control building HVAC fan status	Indicating lights	10	N/A
	Control building HVAC dampers position	Indicating lights	25	N/A
	Outside air isolation valve position	Indicating lights	2	N/A
	Air inlet isolations damper position	Indicating lights	2	N/A
	Inoperability	Status lights	61	N/A

TABLE 7.5-1 (Cont'd.)

System	Parameter	Type Readout	Number of Channels	Range
	Heater inlet air temperature	Indicator	2	0°F - 100°F
	Heater outlet air temperature	Indicator	2	5°F - 105°F
	Filter train outlet temperature	Indicator	2	15°F - 115°F
	Control room A/C return air temperature	Indicator	2	50°F - 105°F
	Special filter train flow	Recorder	2	0 - 100%
	Special filter train overall differential pressure	Recorder	2	0 - 100%
	Relay room A/C return air temperature	Indicator	2	50°F - 105°F
	Control building HVAC unit coolers status	Indicating lights	11	N/A
	Standby SWGR room area temperature	Indicator	3	45°F - 120°F
	Unit cooler return air temperature	Indicator	4	45°F - 120°F
Control building chilled water status	Control building chilled water circulating pump	Indicating lights	2	N/A
	Control building chilled water compressor status	Indicating lights	2	N/A
	Chiller-compressor auxiliary oil pump position	Indicating lights	2	N/A
	Chilled water valves position	Indicating lights	6	N/A
	Inoperability	Status lights	10	N/A
Standby power	Emergency diesel generator current	Meter	2	0 - 1,000 A ac
	Emergency diesel generator voltage	Meter	2	0 - 5,250 V ac
	Emergency diesel generator power	Meter	2	0 - 6 MW
	Emergency diesel generator reactive power	Meter	2	-4.5 to +4.5 Mvar

TABLE 7.5-1 (Cont'd.)

System	Parameter	Type Readout	Number of Channels	Range
	Emergency diesel generator frequency	Meter	2	55 - 65 Hz
	Emergency diesel generator rpm	Meter	2	0 - 700 rpm
	Emergency diesel generator exciter field volts	Meter	2	0 - 125 V dc
	Position of air circuit breakers	Indicating lights	8	N/A
	Diesel generator control switch status	Indicating lights	2	N/A
	Emergency diesel generator output breaker position	Indicating lights	2	N/A
	Emergency diesel generator neutral breaker position	Indicating lights	2	N/A
	Voltage regulator mode status	Indicating lights	2	N/A
	Service water to emergency diesel generator cooler MOV position	Indicating lights	2	N/A
	Inoperability	Status lights	58	N/A
HPCS power	HPCS diesel generator current	Ammeter	1	0 - 600 A
	HPCS diesel generator VARS	Meter	1	0 - 4,200 KVAR
	HPCS diesel generator kW	Meter	1	0 - 4,200 kW
	HPCS diesel generator rpm	Meter	1	0 - 1,000 rpm
	HPCS 125-V dc bus voltage	Voltmeter	1	0 - 150 V
	HPCS normal supply source current	Ammeter	1	0 - 1,500 A
	HPCS emergency supply source current	Ammeter	1	0 - 1,500 A
	HPCS auxiliary transformer current	Ammeter	1	0 - 750 A
	HPCS diesel generator voltage	Voltmeter	1	0 - 5.25 kV
	HPCS diesel generator frequency	Meter	1	55 - 65 Hz

TABLE 7.5-1 (Cont'd.)

System	Parameter	Type Readout	Number of Channels	Range
	HPCS pump motor current	Ammeter	1	0 - 600 A
	SW to diesel generator valve position inoperability	Indicating lights	4	N/A
		Status lights	14	N/A
Diesel generator building HVAC	Ventilation exhaust fan position	Indicating lights	6	N/A
	HVAC dampers position	Indicating lights	18	N/A
	Inoperability	Status lights	30	N/A
	Emergency diesel generator room temperature	Indicator	3	50°F - 150°F
	Diesel generator control room unit cooler status	Indicating lights	3	N/A
Service water pump bays ventilating	Pump bay unit cooler status	Indicating lights	4	N/A
	Inoperability	Status lights	8	N/A
Spent fuel pool cooling	System valves position (including SWP and CCP valves)	Indicating lights	28	N/A
	Filter header inlet isolation valves position	Indicating lights	2	N/A
	Water circulating pumps status	Indicating lights	2	N/A
	Inoperability	Status lights	22	N/A
	Surge tank water temperature	Indicator	2	30°F - 150°F
	Surge tank water level	Indicator	2	0 - 20'
	Water heat exchanger outlet temperature	Indicator	2	30°F - 150°F
	Pump suction pressure	Indicator	2	0 - 50 psig
	Pump discharge pressure	Indicator	2	0 - 300 psig
	Flow	Indicator	2	0 - 3,000 gpm
Radiation Monitoring	Control room air intake radiation	Indicator Recorder	4 4	10^{-7} - 10^{-1} uCi/cc 10^{-7} - 10^{-1} uCi/cc
	RHR heat exchanger service water discharge radiation	Indicator Recorder	2 2	10^{-7} - 10^{-1} uCi/cc 10^{-7} - 10^{-1} uCi/cc

TABLE 7.5-1 (Cont'd.)

System	Parameter	Type Readout	Number of Channels	Range
	Service water effluent discharge radiation	Indicator Recorder	2 2	10^{-7} - 10^{-1} uCi/cc 10^{-7} - 10^{-1} uCi/cc
	Drywell atmosphere train leakage - gaseous radiation level	Indicator Recorder	2 2	10^{-7} - 10^{-1} uCi/cc
	Drywell atmosphere train leakage - particulate radiation level	Indicator Recorder	2 2	10^{-11} - 10^{-5} uCi/cc
	Inside drywell primary containment radiation	Indicator Recorder	4 4	10^{0} - 10^{7} R/hr 10^{0} - 10^{7} R/hr
	Radiation level above refueling floor - gas	Indicator Recorder	2 2	10^{-7} - 10^{-1} uCi/cc 10^{-7} - 10^{-1} uCi/cc
	Radiation level below refueling floor - gas	Indicator Recorder	2 2	10^{-7} - 10^{-1} uCi/cc 10^{-7} - 10^{-1} uCi/cc
	Channel failure inoperability	Status lights	12	N/A
Instrument, service and breathing air	ADS primary containment isolation valve position	Indicating lights	4	N/A
	Instrument air primary containment isolation valve position	Indicating lights	8	N/A
	ADS heater pressure	Indicator	2	140 - 240 psig
	Inoperability	Status lights	10	N/A
	Service air and breathing air manual isolation valves position	Indicating lights	8	N/A
Feedwater	Feedwater block valves position	Indicating lights	2	N/A
Reactor building floor drains	Floor drain containment isolation valves position	Indicating lights	4	N/A
	Inoperability	Status lights	6	N/A

TABLE 7.5-1 (Cont'd.)

System	Parameter	Type Readout	Number of Channels	Range
Reactor building equipment drains	Reactor water drain isolation valve position	Indicating lights	1	N/A
	Reactor water drain control valve position	Indicating lights	1	N/A
	Drywell equipment drains isolation valve position	Indicating lights	4	N/A
	Inoperability	Status lights	6	N/A
Main steam safety valves	Safety/relief valve position	Indicating lights	18	N/A
	Inoperability	Status lights	12	N/A
Reactor water cleanup	RWCU isolation valves position	Indicating lights	2	N/A
	RWCU return valve position	Indicating lights	1	N/A
	Inoperability	Status lights	3	N/A
Reactor plant component cooling water	RPCCW containment isolation valves position	Indicating lights	12	N/A
Fire protection	Deluge isolation valve position	Indicating lights	4	N/A
Main steam	MSIVs position	Indicating lights	8	N/A
	Inoperability	Status lights	9	N/A

NOTES:
1. The number of channels indicated in this table applies to the number of times a particular parameter exists in the main control room on the identified type of readout.
2. A single channel of status lights consists of both a red and green light.

TABLE 7.5-2 (Cont'd.)

NOTES: (cont'd.)

between downcomer submergence and the accomplishment of the primary containment's pressure suppression function is one of the bases for the construction of the heat capacity temperature limit (showing the heat capacity of the suppression pool as a function of water level) and pressure suppression curves in the plant EOPs. Accordingly, when this low suppression pool water level condition occurs, the associated mitigative action directed in the EOP for control of primary containment conditions is to rapidly and completely depressurize the reactor vessel by opening all of the ADS SRVs. No further (additional) actions are specified in the EOPs for suppression pool water levels below 192 ft (except for authorizing operation of ECCS and RCIC pumps irrespective of their NPSH and vortex limits, under certain degraded conditions). Since, per RG 1.97, accomplishment of mitigation is the principal purpose stated for monitoring this variable, implementing 192 ft as the bottom of the monitored range is sufficient to accomplish the associated objective.

9. Implemented as an alternative to the direct monitoring of "Radioactivity Concentration or Radiation Level in Circulating Primary Coolant" (refer to Note 7, above).

10. Implementation as a RG 1.97 parameter at Unit 2 is based on providing containment radioactivity information explicitly required by the EOP for control of radioactive releases which might occur via leakage past the MSIVs.

11. Discharges to the environment via the main stack; refer to Table 7.5-2 entries for "Main Stack Effluent Radioactivity and Flow Rate" (items 57 and 60, respectively).

12. Discharges to the environment via the reactor/radwaste building vent; refer to Table 7.5-2 entries for "Reactor/Radwaste Building Ventilation Exhaust Radioactivity and Flow Rate" (items 61 and 64, respectively).

13. The bottom of the monitored range (5.3 ft above the bottom of the tanks) is higher than that recommended by RG 1.97. This deviation from RG 1.97 has been evaluated and judged to be acceptable based on the following combination of relevant factors: (1) All tank inlet and outlet nozzles, other than the nozzle for the RCIC pump suction line (from tank 1A) and the nozzle for the HPCS pump suction line (from tank 1B), are located above the bottom of the monitored range; (2) Low water level in the tanks is alarmed in the control room; (3) All automatic actions initiated directly by a low tank water level condition occur above the bottom of the monitored range; (4) RCIC and HPCS pump suction automatic transfer (from the CST to the suppression pool) actuates upon receipt of a low pump suction pressure signal rather than a low CST water level signal.

14. Monitoring this variable applies only to those plants which have a Mark III containment. Unit 2 has a Mark II containment and, therefore, this parameter does not apply to Unit 2.

15. The bottom of the monitored range is higher, by 10°F, than that recommended by RG 1.97. This deviation from the recommended range was specifically reviewed by the NRC and, per documentation in Appendix M of NUREG-1047 (Reference 2), judged to be acceptable.

16. Deviates from the monitoring range recommended by RG 1.97.

    a. The bottom of the monitored range is higher, by 10°F, than that recommended by RG 1.97. Relative to the full span of the monitored range, this difference is small and of no significance for monitoring of this variable under post-accident conditions.

    b. The top of the monitored range is lower, by 90°F, than that recommended by RG 1.97. Drywell design temperature is 340°F and, per analysis results documented in Section 6.2 (Table 6.2-4), drywell temperature will not increase above 340°F for the worst-case postulated LOCA. Also, the 350°F top end of the monitored range is appropriately reflected in the Operator actions specified in the Unit 2 EOPs. Based on these factors, the 350°F value for the top of the monitored range for drywell temperature is acceptable.

17. Unit 2 has no MSIV leakage control system; therefore, this parameter does not apply to Unit 2.

18. Unit 2 has no isolation condenser; therefore, this parameter does not apply to Unit 2.

four APRM channels compares the core average power to preset trip levels or criteria to generate APRM downscale, inoperable, upscale alarm, and upscale scram trip signals for use in the RPS or RMCS. The RMCS signals are provided directly while the RPS signals are sent to four two-out-of-four voter channels which pass them on to the RPS only if two APRM channels indicate a trip. Refer to Technical Specifications.

The APRMs also provide downscale, INOP, or bypass signals to the RRCS permissive logic for the following functions:

1. Trip low-frequency motor generator (LFMG) circuit (RPT) in recirculation system.

2. Start feedwater runback.

3. Initiate SLCS.

4. Isolate RWCU system.

APRM "not downscale" or INOP signals provide the permissive. APRM channel bypass prevents permissive signals from being sent. The RRCS is discussed in Section 7.6.1.8.

Section 7.2.1.1 describes the APRM inputs to the RPS, and Figure 7.6-8 shows the RPS trip circuit input arrangement. APRM instrument specifications are summarized in Table 7.6-6. The APRM trip logic is set for a scram trip at 15 percent core power in the REFUEL, SHUTDOWN and STARTUP modes. When the mode switch is in RUN, in addition to the fixed APRM scram trip, there is also a simulated thermal power APRM scram trip that varies with recirculation flow. This provides a power-following scram setpoint. As power increases, the scram trip setpoint also increases up to a fixed setpoint above 100 percent. See Figure 7.6-8 for the APRM circuit arrangement of the RPS input.

A manual bypass selector switch, located in the control room, permits bypassing of only one APRM at a time. Procedural controls regulate the bypass of a selected APRM. A bypassed APRM is indicated by a light in the control room. Bypass of APRM two-out-of-four voter channels is not permitted.

The worst single-failure scenario would include the bypass of one APRM channel and the failure of an additional APRM channel. Two APRM channels and three two-out-of-four voter channels would remain operable and can provide the necessary inputs for a reactor scram prior to damaging fuel.

An APRM INOP condition results when there is a loss of power to the APRM chassis, the firmware/software watchdog timer has timed out, the APRM key switch is taken out of OPER (Operate), or a critical self-test fault is detected. An INOP trip causes a half-trip in the two-out-of-four voter channels, a rod block, and annunciation.

The APRM channels receive power from two 120-V ac UPS systems. Each APRM channel is powered redundantly from the two 120-V ac UPS systems. The RPS trip outputs from the two-out-of-four voter channels are powered from the same bus used for its associated RPS trip system.

In compliance with NRC Generic Letter 94-02, the neutron monitoring system at Unit 2 was replaced with a GE nuclear measurement analysis and control (NUMAC) power range neutron monitoring (PRNM) system that incorporates an OPRM function into the APRMs. The OPRM monitors LPRM detector signals to detect thermal-hydraulic instabilities in the reactor core and generate an automatic suppression signal to terminate the instability if the oscillations exceed predefined levels. The OPRM system consists of four redundant and separate channels that are incorporated into the NUMAC APRM chassis. Each OPRM channel monitors for oscillations using three different algorithms and generates a safety trip signal to terminate excessive oscillations as determined by any of the three algorithms.

An OPRM channel only processes LPRM detector data and total recirculation flow data associated with the APRM channel in which the OPRM is located. Manual bypass of an APRM channel also causes a bypass of the corresponding OPRM channel.

The OPRM monitors for thermal-hydraulic instabilities by monitoring LPRM detector signals since the pressure and flow perturbations that occur during these instabilities cause localized oscillation of the LPRM detector signals. The nonbypassed LPRM detector signals received by an OPRM channel are grouped into "cells" and a cell reference value is calculated. The cell reference value is supplied to three separate algorithms that test for neutron flux oscillations. These algorithms are the period based algorithm (PBA), the amplitude based algorithm (ABA), and the growth rate based algorithm (GRBA). Automatic protection is actuated if any of the three algorithms meet their trip conditions. However, only the PBA is used to demonstrate protection of the minimum critical power ratio (MCPR) safety limit for anticipated reactor instabilities. The other two algorithms are included as defense-in-depth features.

The OPRM upscale trip and oscillation alarms are enabled only when the reactor core flow as measured by recirculation flow is below approximately 60 percent and the reactor power is above approximately 30 percent. An alarm is generated to alert the Operators when the OPRM trip is enabled.

The OPRM provides a pre-trip alarm and an upscale trip. In addition, an OPRM INOP alarm is generated to alert the Operator of any event that compromises the operability of the OPRM channel. The upscale trip is sent to the safety-related section of the 2/4 logic module and the other signals are sent to the nonsafety-related section.

identified, are also presented in Chapter 15. The conditions that require protective actions are described in Chapter 15 and Appendix 15A.

7.6.1.9.1 Variables Monitored to Provide Protective Actions

The following variables are monitored to provide protective action inputs:

1. PRMS system:

   a. Main steam line radiation level.

   b. Reactor building ventilation above refueling floor radiation level.

   c. Reactor building ventilation below refueling floor radiation level.

   d. Main control room air intakes radiation level.

   e. RHR heat exchangers service water discharge radiation level.

   f. Service water discharge to Lake Ontario radiation level.

   g. Liquid waste discharge radiation level.

   h. Drywell atmosphere radiation level.

   i. Offgas radiation level.

2. High-pressure/low-pressure interlocks:

   a. Reactor pressure.

   b. Differential pressure across the LPCS and LPCI injection valves.

   c. Steam line and heat exchanger shell side pressure (RHR steam-condensing mode).

3. LDS system:

   a. RCIC area temperatures, ambient.

   b. RCIC steam line flow rate.

   c. RCIC turbine exhaust diaphragm pressure.

   d. RCIC steam line pressure.

   e. RHR area temperatures, ambient.

f. RWCU area temperatures, ambient.

g. RWCU differential flow.

h. LPCS, RHR-A, -B, -C, RCIC, HPCS pump cubicles floor water level.

i. Reactor building general area at el 175 ft floor water level.

j. Main steam line tunnel temperatures, differential, and ambient.

k. Reactor building pipe chase ambient temperature.

l. Reactor building ambient temperature.

m. Main steam line turbine building, area temperatures, ambient.

n. Main steam line flow rate.

4. NMS system:

a. Neutron flux during startup and normal shutdown (IRM).

b. Core average neutron flux (APRM, LPRM).

c. Oscillation power range monitor (OPRM).

5. RPT system:

a. Turbine stop valve closure.

b. Turbine control valve fast closure.

c. Turbine first-stage pressure (permissive).

6. SRVs - relief function:

a. Reactor vessel pressure.

7. SFC system:

a. Spent fuel pool temperature.

b. Spent fuel pool level.

8. RRCS system:

a. Reactor vessel dome pressure.

isolation system actuation function is provided. This is accomplished by tripping the LDS one channel at a time from the leak detection panel in the main control room. An indicator lamp is provided to show that the particular channel is tripped.

Regulatory Guide 1.53 The portions of the LDS that provide outputs to system isolation logic comply with this guide. Discussion is provided in Section 7.3.2 under RG 1.53.

7.6.2.4 Neutron Monitoring System - Analysis

7.6.2.4.1 Conformance to General Functional Requirements - Intermediate Range Monitor Subsystem

The analysis for the RPS trip inputs from the IRM subsystem is discussed in Section 7.2.2.

The IRM is the primary source of information as the reactor approaches the power range. Its linear steps and the rod-blocking features on both high flux level and low flux level require that all the IRMs remain on the correct range as core reactivity is increased by rod withdrawal. This arrangement ensures that the IRMs always provide a good indication of reactor power, that adequate margin is maintained between the flux reading and the trip point to prevent unnecessary trips, and during a reactivity addition transient (such as a cold water slug injection or refueling accident) that the trip point will be reached soon enough to eliminate a large power transient. The sensitivity of the IRM is such that the IRM is on scale on the least sensitive (highest) range with approximately 15 percent power.

The number and locations of the IRM detectors have been selected to provide sufficient intermediate range flux level information under the worst-permitted bypass or detector failure conditions. In addition to this, an APRM setdown scram is provided to limit core power transients when the reactor is not in the RUN mode.

To assure that each IRM is on the correct range, a rod block is initiated any time the IRM is downscale and not on the most sensitive (lowest) scale. A rod block is initiated if the IRM detectors are not fully inserted in the core unless the reactor mode switch is in the RUN position. The IRM scram trips and the IRM rod block trips are automatically bypassed when the reactor mode switch is in the RUN position and the APRM system is providing NMS scram trips and rod blocks appropriate to this higher power regime of reactor operation.

Local Power Range Monitors

The LPRMs provide detailed information about neutron flux throughout the reactor core and they provide flux information for the APRM system[1] and the OPRM system. The LPRMs are powered from two redundant high-voltage power supplies, allowing

operation with one ac power supply failed or out of service without limiting reactor operation. Individual failed LPRM detector chambers can be bypassed. The flux information for a failed chamber location:

1. Can be interpolated from nearby chambers,

2. Can be derived from an octant-symmetric chamber, or

3. An actual flux measurement can be made at the failed detector's location using the TIP system.

The APRM electronics automatically adjusts its flux averaging operation for bypassed detector inputs. If a given APRM has too few inputs or the number of failed or bypassed LPRMs inputting to an APRM from each detector level (A, B, C, or D) is too low, a rod block and alarm will be initiated.

The OPRM automatically excludes any bypassed LPRM detectors from OPRM monitoring. The OPRM groups LPRM signals into cells. If the number of operating LPRM input signals to an OPRM cell is less than the minimum required, the cell is inoperable and excluded from OPRM monitoring.

Average Power Range Monitoring Subsystem

Each APRM derives its signal from LPRM information. There are 43 LPRMs assigned to each of the four APRMs. Each APRM provides trip inputs to the four two-out-of-four voter channels. Each two-out-of-four voter channel provides trip inputs to one RPS division. The assignment, power separation, cabinet separation, and LPRM signal isolation are in accordance with the safety design basis of the RPS. The number and arrangement of APRM channels is such that one undetected failure or one bypassed channel in each trip system can be tolerated and still satisfy the RPS safety design bases.

The flow-referenced APRM scram setpoint is adequate to prevent fuel damage during an abnormal operational transient, as demonstrated in Chapter 15.

Oscillation Power Range Monitor Subsystem

Each OPRM derives its signal from LPRM information. An OPRM channel is contained in each APRM chassis. The OPRM uses the same LPRM detectors assigned to its respective APRM. Each OPRM provides trip inputs to the four two-out-of-four voter channels. Each two-out-of-four voter channel provides trip inputs to one RPS division. The OPRMs meet the same separation and isolation requirements as the APRMs. In addition, the OPRMs meet the same failure and bypass tolerance as the APRMs.

7.6.2.4.2 Conformance to 10CFR50 Appendix A

The general design criteria conformance discussions provided in Section 3.1 apply to the NMS system as specified in Table 7.1-3.

7.6.2.4.3 Conformance to IEEE Standards

The IEEE standards that apply to the NMS are specified in Table 7.1-3. The following conformance discussion applies specifically to the NMS. Refer to Section 7.1.2.2 for conformance discussions applying generically to all safety-related systems.

7.6.2.4.3.1 Conformance to IEEE-279-1971

Paragraph 4.1 The NMS automatically initiates both downscale and upscale rod block trips and scram trips whenever measured nuclear flux exceeds certain trip setpoints. The NMS is designed to provide these protective trips in all operating modes. As the reactor operating mode is changed, the NMS subsystem used and the protective trip specifications are automatically changed to guarantee that core flux is adequately monitored.

Paragraph 4.2 The IRM and APRM/OPRM subsystems of the NMS are designed so that failure or bypass of one NMS channel inputting trip signals to each of the RPS division pairs will not compromise the RPS design basis. The system can initiate rod block trips or scram trips even if a single failure removes a channel from the trip system.

Paragraph 4.3 Components used in the NMS have been carefully selected on the basis of suitability for the specific application. Ratings have been selected with sufficient conservatism to ensure against significant deterioration during anticipated duty over the lifetime of the plant. Furthermore, a quality control and assurance program has been implemented and documented by equipment vendors to comply with the requirements set forth in 10CFR50 Appendix B. The quality of NMS components and modules is discussed in Sections 3.2 and 3.11.

Paragraph 4.4 Test data and the operating experience gained by the use of similar NMS equipment at operating plants confirm that the equipment will meet, on a continuing basis, the performance requirements determined to be necessary for achieving the system requirements.

Paragraph 4.5 The NMS equipment is designed to operate and to perform its safety-related functions in the environment of the mounting location of the components (Section 3.11). The NMS is not required to be operational after an accident, nor are components of the NMS required to be operational in accident environments, except the IRM and LPRM cables.

Paragraph 4.6 Each NMS channel supplying trip signals to the RPS system is independent and physically separated from NMS channels

supplying trip signals to other RPS divisions. This separation is accomplished through the choice of cable routing, cabinet construction, and circuit signal isolation, resulting in the decoupling of the effects of unsafe environmental factors, electrical transients, and the physical accident consequences documented in the design basis. The rod block signal outputs are likewise isolated.

Paragraph 4.7 The transmission of signals from protection system equipment for control system use is accomplished through isolation devices classified as part of the protection system. No credible failure of the output of an isolation device will prevent the associated protection system channel from meeting the minimum performance requirements specified in the design basis.

The scram trip logic requires one NMS scram trip into RPS Division 1 or 3 and one NMS scram trip into RPS Division 2 or 4. With one IRM channel bypassed in the group of IRM channels feeding RPS Division 1 or 3, one channel bypassed in the group of IRM channels feeding RPS Division 2 or 4, or one APRM/OPRM channel bypassed, and an additional single random failure in a control system requiring protective action, the remaining redundant protection channels (six IRM or three APRM/OPRM) will provide protective action with one-out-of-two twice logic for the IRMs and a two-out-of-three logic for the APRMs/OPRMs.

Paragraph 4.8 The NMS protection system inputs are derived from trip units set to trip when core flux level signals or averaged signals exceed specified limits. The neutron flux is converted into an electrical current signal and applied to the NMS trip units. The tripped or nontripped protection system input state is therefore a direct measure of the flux level being measured.

Paragraph 4.9 Each NMS input sensor can be checked during reactor operation. This check can be accomplished by cross-checking between IRM channels while considering their relative core positions. Detector response to flux can be verified by withdrawing or inserting the IRM being checked and observing the appropriate response. Core power changes during startup and shutdown also provide a "perturbed monitored variable" which will cause an observable flux change. In addition to this, the individual IRM detector's output can be read as an input to the IRM preamplifier located outside the control room.

The APRM/OPRM detector signals (LPRM inputs) can be individually selected and displayed in the control room during reactor operation. Changing reactor power can be monitored to provide evidence the LPRM is correctly tracking power. The signal from each LPRM can also be cross-checked with the other LPRMs, or can be checked by running the TIP probe up into the instrument tube to a position near the LPRM being checked.

Paragraph 4.10 Each IRM and each APRM/OPRM channel can be calibrated and/or tested during reactor operation. Trip setpoint checks can be done at each channel drawer, and calibration of LPRMs, APRMs, and IRM can be done during reactor operation using core heat balance calculations.

Paragraph 4.11 The NMS system is designed to permit a channel to be bypassed for maintenance or calibration without initiating protective action at the system level. Four IRMs supply RPS trip signals to RPS Division 1 or 3, and the four other IRMs supply scram trips to RPS Division 2 or 4. (A trip of Division 1 or 3 coincident with a trip of Division 2 or 4 will result in a full scram.) One IRM in each set of four may be bypassed. Removing more than one from each set of four will result in an IRM INOP condition, which is an automatic trip of the related RPS logic.

The APRM/OPRM arrangement includes four APRM/OPRM channels, only one of which can be bypassed at a time. Each of the four APRM/OPRM channels provides RPS trip inputs to all four two-out-of-four voter channels, none of which can be bypassed. Removing a second APRM/OPRM channel from operation with one already bypassed will result in an APRM INOP condition. This automatically trips one input to the two-out-of-four voter channels. When IRM or APRM channels are bypassed, the remaining active parts of the system continue to operate to meet the single-failure criterion.

Paragraph 4.12 The IRM scram trip is bypassed whenever the reactor mode switch is placed in the RUN position. Although this is not distinctly an operating bypass since it requires manual manipulation of the mode switch, it is an automatic consequence of placing the mode switch in RUN. The APRM setdown scram trip (15 percent power scram) is also bypassed in the run mode. Moving the mode switch to RUN replaces the IRM scram and APRM setdown scram with the fixed setpoint APRM scram trip. The reactor mode switch is considered part of the protection system and is designed in accordance with protection system criteria.

Paragraph 4.13 Whenever an IRM or APRM channel is bypassed, this condition is continuously indicated by a BYPASSED status light in the control room. In addition to this, each channel's bypassed condition is indicated at the IRM or APRM signal conditioning equipment. Whenever an IRM or APRM channel is deliberately rendered inoperative, an IRM INOP or APRM INOP condition is continuously indicated on the main control panel, at the respective signal condition equipment, and by an annunciator.

Paragraph 4.14 The bypass switch for the APRM and the bypass switch for the IRM system function to permit only one APRM channel and only one IRM channel in each trip system to be bypassed at a time. Manipulating the switch to bypass a second APRM channel or a second IRM on the same trip system is possible only by first returning the originally bypassed channel to service.

IRM and APRM channels may be taken out of service with the operating function switch on their respective signal conditioning equipment drawers; however, this will result in an IRM INOP or APRM INOP if that particular channel is not bypassed with the main control panel bypass switch when the operating function switch is taken out of the OPERATE position. Therefore, removing an unbypassed IRM or APRM channel from OPERATE and placing it in STANDBY (INOP for the APRMs) or some other test mode in order to bypass the channel will result in a half-scram trip of the RPS, or a half-trip of the APRM two-out-of-four voter channels and all the associated alarms. Access to means of bypassing any safety action or function for these systems is under administrative control.

Paragraph 4.15 Both the APRM setdown in the STARTUP mode and the APRM flow-biased scram in the RUN mode are multiple setpoints. The setdown scram is placed into service and removed from service by the positioning of the reactor mode switch. The APRM flow-biased scram setpoint is automatically changed to more restrictive setpoints as recirculation flow is reduced. The mode switch and flow units used to prevent improper application of less restrictive scram trip setpoints are considered part of the protection system and are designed accordingly.

Paragraph 4.16 The NMS scram trip signals do not seal in at the IRM, APRM or OPRM trip units. The trip signal will return to the nontripped state as soon as core flux conditions warrant. However, the RPS system does contain built-in seal-in circuitry so that a momentary excursion of a NMS flux level above a trip setpoint will result in sealed-in-tripped RPS logic even after the NMS flux returns to normal levels. See Section 7.2.2, IEEE-279-1971 Paragraph 4.16 for details.

Paragraph 4.17 The RO can initiate a manual IRM flux scram by ranging down with one IRM range switch in each trip system provided that core flux is above the Range 1 scram trip setpoint. A NMS flux scram trip can also be manually initiated by taking one unbypassed IRM or APRM in each trip system out of OPERATE, or by placing the reactor mode switch in STARTUP when APRM flux is greater than 15 percent. More appropriate means of manually tripping the RPS system are discussed in Section 7.2.2, IEEE-279-1971, Paragraph 4.17.

Paragraph 4.18 The IRM, APRM, OPRM, LPRM, and flow monitoring signal conditioning drawers, and related power supplies are mounted in cabinets within the main control room. Trip setpoint adjustment controls are not accessible except via administrative control.

Paragraph 4.19 Status lights on the main control panel and the signal conditioning equipment indicate and identify each channel's tripped or nontripped status.

Paragraph 4.20 Recordings of each channel and metered indications of each channel are provided for both IRMs and APRMs. Indication can easily be compared channel to channel for verification of proper system operation.

Paragraph 4.21 The NMS signal conditioning equipment is designed to facilitate the recognition, location, replacement, repair, and adjustment of malfunctioning components or modules.

Paragraph 4.22 NMS equipment is distinctively identified as to its function and channel.

7.6.2.4.3.2 Conformance to IEEE-338-1971

Compliance is shown in Section 7.6.2.4.3.1, IEEE-279-1971 conformance, Paragraphs 4.9 and 4.10.

7.6.2.4.3.3 Conformance to IEEE-384-1974

The NMS equipment is designed to conform to IEEE-384 in accordance with RG 1.75 requirements only. See Section 7.6.2.4.4, RG 1.75.

7.6.2.4.4 Conformance to Regulatory Guides

The regulatory guides that apply to the NMS are specified in Table 7.1-3. The following conformance discussions apply specifically to the NMS. Refer to Section 7.1.2.3 for conformance discussions that apply generically to all safety-related systems.

Regulatory Guide 1.47 The NMS meets the requirements of RG 1.47 through the use of bypass indication as described in Section 7.6.2.4.3.1, IEEE-279-1971 Conformance, Paragraph 4.13.

Regulatory Guide 1.53 While not a design basis, the NMS conforms to this guide in the following manner:

Position C.1 - The IRM and APRM/OPRM subsystems of the NMS are designed so that failure or bypass of one NMS channel inputting trip signals to each of the RPS trip systems will not compromise the RPS design basis. The system can initiate rod block trips or scram trips even if a single failure removes a channel from either of the trip systems. Functional details of the NMS are provided in Section 7.6.1.4.

Position C.2 - The number and arrangement of APRM/OPRM channels is such that failure of a single channel or a bypassed channel is acceptable. All channels are fully testable.

Position C.3 - The bypass switch for the IRM subsystem provides input to more than one RPS trip logic channel.

Position C.4 - No credible failure of the logic output will prevent the RPS channels from meeting the minimum performance requirements specified in the design basis.

The scram trip logic requires one NMS scram trip into RPS Division A1 or A2 and one NMS scram trip into RPS Division B1 or B2. With one NMS channel bypassed and an additional single random failure in a control system requiring protective action, the remaining redundant protection channels (six IRM or two APRM/OPRM) will provide protective action with one-out-of-two twice logic for the IRMs and two-out-of-two logic for the APRM/OPRM channels.

Regulatory Guide 1.75 The NMS meets RG 1.75 with the requirements that: 1) isolators or physical separation may be provided without affecting building or control/relay room arrangement, and 2) physical separation between divisions of essential systems and between essential systems and essential circuits are not required to be maintained. See the discussion of compliance in Section 7.2.2, and in Section 7.6.2.4.3.1, Paragraph 4.6.

THIS PAGE INTENTIONALLY BLANK

7.6.2.5 Recirculation Pump (Trip) System - Analysis

7.6.2.5.1 Conformance to 10CFR50 Appendix A

The general design criteria conformance discussions provided in Section 3.1 apply to the RPT system as specified in Table 7.1-3.

7.6.2.5.2 Conformance to IEEE Standards

The IEEE standards that apply to the RPT system are specified in Table 7.1-3. The following conformance discussion applies specifically to the RPT system. Refer to Section 7.1.2.2 for conformance discussions applying generically to all safety-related systems.

7.6.2.5.2.1 Conformance to IEEE-279-1971

Paragraph 4.1 Protective action occurs automatically in response to preset values of the sensed variables. This is accomplished by the use of pressure and position sensors which automatically initiate the relay operated trip logic, which trips the recirculation pump circuit breakers without the necessity for manual action. Protective action is completed upon trip of the recirculation pump from the line frequency power source.

Paragraph 4.2 No single failure will disable the capability to trip both recirculation pumps from high speed operation. This is accomplished by using redundant and divisionally separated sensor and trip circuitry. Either division will trip both recirculation pumps. The transfer to low speed operation is not necessary to satisfy the functional requirement of RPT, which is to rapidly reduce core flow. Therefore, the circuitry to start up the LFMG set is not required to satisfy the single-failure criterion. Those portions of the circuitry that do not satisfy this criterion are isolated from safety portions.

Paragraph 4.3 For a discussion of quality of RPS components and modules, refer to Sections 3.2 and 3.11.

Paragraph 4.4 Detailed discussion of qualification is contained in Sections 3.10 and 3.11.

Paragraph 4.5 Refer to Sections 3.10 and 3.11.

Paragraph 4.6 Channel independence is assured by the utilization of physical separation, electrical independence, and mechanical barriers.

Paragraph 4.7 Each of the two RPS-RPT logic circuits generates two signals used for disconnecting the recirculation pumps from their normal power supply and transferring them to low-speed operation on their LFMG sets. The first signal from either logic circuit will disconnect both recirculation pumps from their

FOF 2790275 03C51-1020

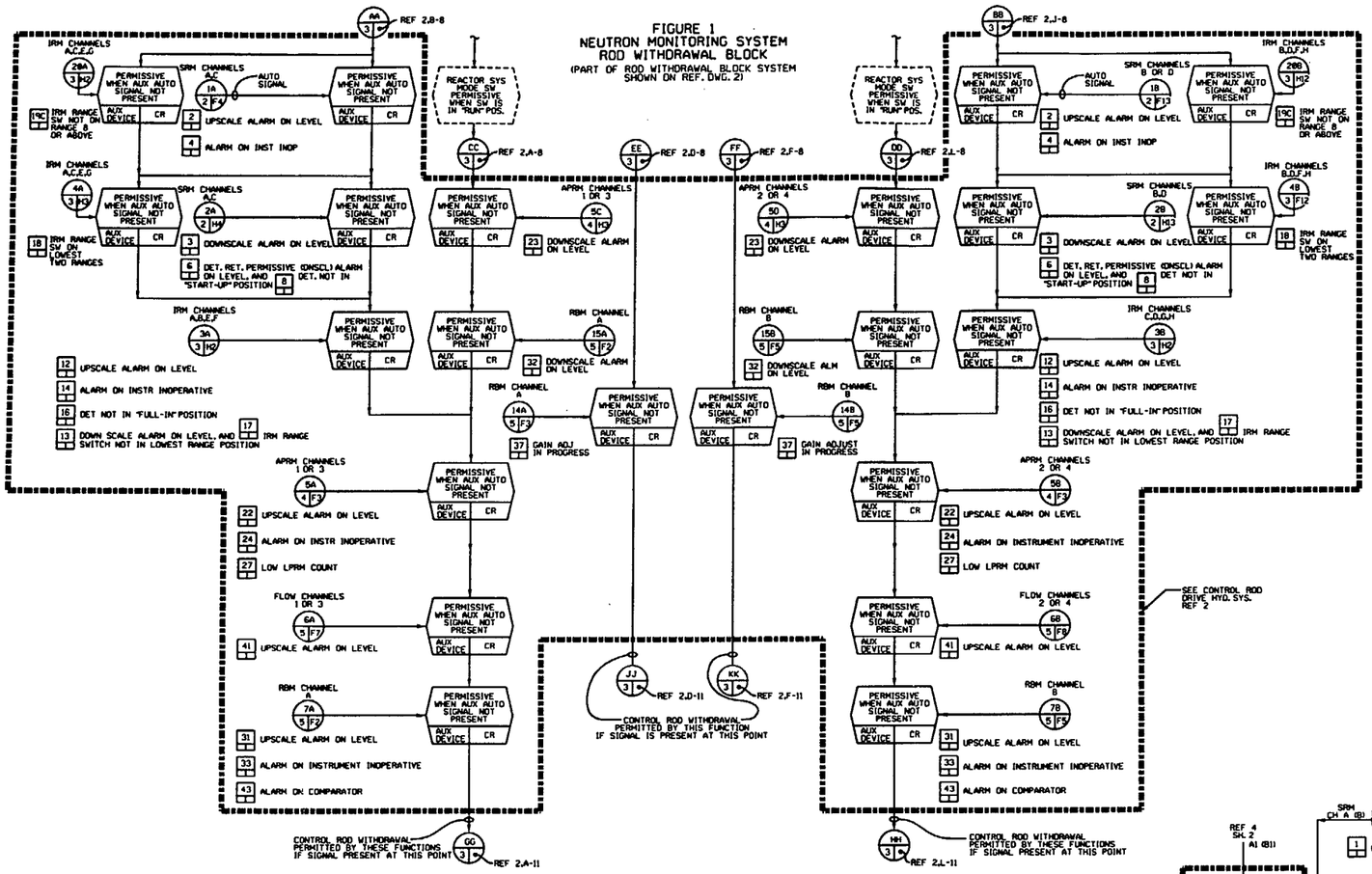

NOTES:
1. INPUTS TO COMPUTER ARE ISOLATED CLOSE TO ALARM CONTACTS.
2. SEE SHEET 7.
3. SEE SHEET 7.
4. THE ENTIRE NEUTRON MONITORING SYSTEM IS A FULLY AUTOMATIC SYSTEM EXCEPT FOR MANUAL OPERATED SWITCHES.
5. ALL EQUIPMENT & INSTRUMENTS ARE PREFIXED BY C51 UNLESS OTHERWISE NOTED.
6. CHANNELS A,C,E, & G ARE FOR TRIP SYSTEM A. CHANNELS B,D,F & H ARE FOR TRIP SYSTEM B.
7. SYMBOL [ ] IS USED TO IDENTIFY THE FUNCTIONS SHOWN ON DETAILS A-F.

LEGEND
IRM - INTERMEDIATE RANGE MONITOR
RBM - ROD BLOCK MONITOR
APRM - AVERAGE POWER RANGE MONITOR
SRM - SOURCE RANGE MONITOR
LPRM - LOCAL POWER RANGE MONITOR
TIP - TRAVERSING IN-CORE PROBE
MOC - MULTIPLE OUTPUT CONTROLLER

REFERENCE DOCUMENTS:

NOTE: SYSTEM SELECTION OPTIONS ARE INDICATED BY MULTIPLE MPL ITEM NUMBERS

	MPL ITEM NO.
1. NEUTRON MONITORING SYSTEM IED	C51-1010
2. CONTROL ROD DRIVE HYD. SYS. FCD	C11B & C12-1030
3. NUCLEAR BOILER SYS. FCD	B21-1030
4. REACTOR PROTECTION SYS. IED	C71 & C72-1010
5. PROCESS COMPUTER SYSTEM INPUT/OUTPUT REQUIREMENTS DESIGN SPEC.	C91 & C92-4010
6. LOGIC SYMBOLS	A41-1010
7. NEUTRON MONITORING SYS. ARRANGEMENT	C51-2010
8. REDUNDANT REACTIVITY CONTROL SYSTEM FCD	C22-1030

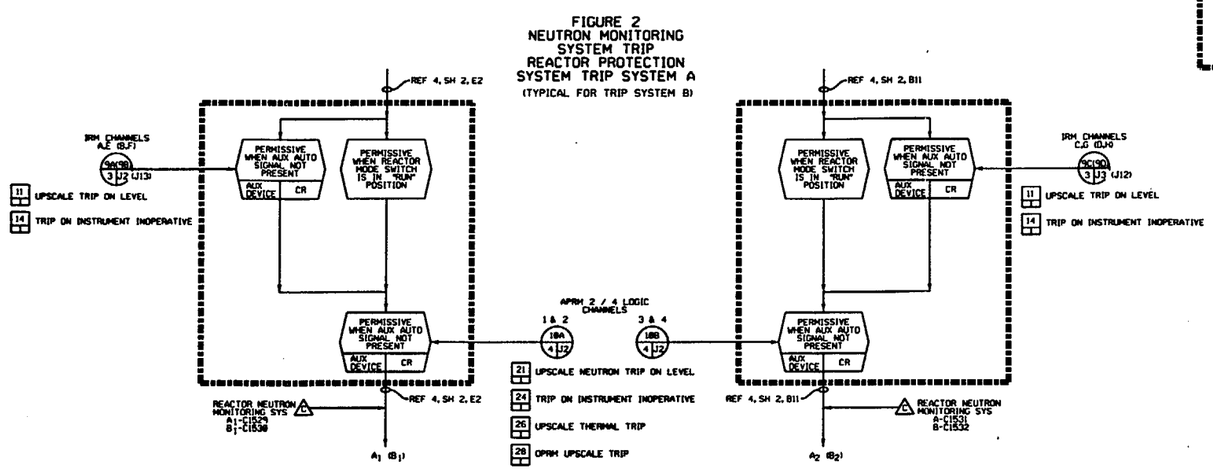

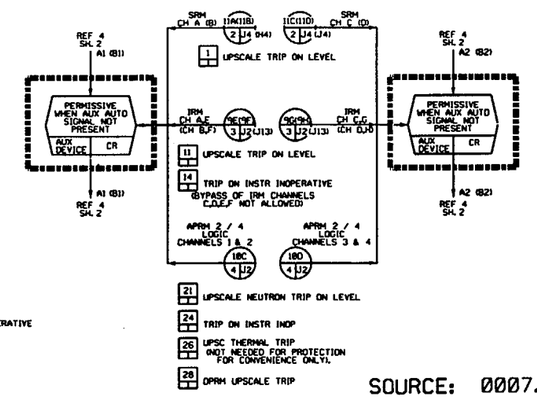

FIGURE 3
NEUTRON MONITORING SYSTEM
NON-COINCIDENT TRIP
(INITIAL LOADING ONLY)
REACTOR PROTECTION SYSTEM TRIP
SYSTEM A
(TYPICAL FOR SYSTEM B)

SOURCE: 0007.224-001-110

FIGURE 7.6-6

NEUTRON MONITORING SYSTEM
SHEET 1 OF 7

NIAGARA MOHAWK POWER CORPORATION
NINE MILE POINT-UNIT 2
UPDATED SAFETY ANALYSIS REPORT

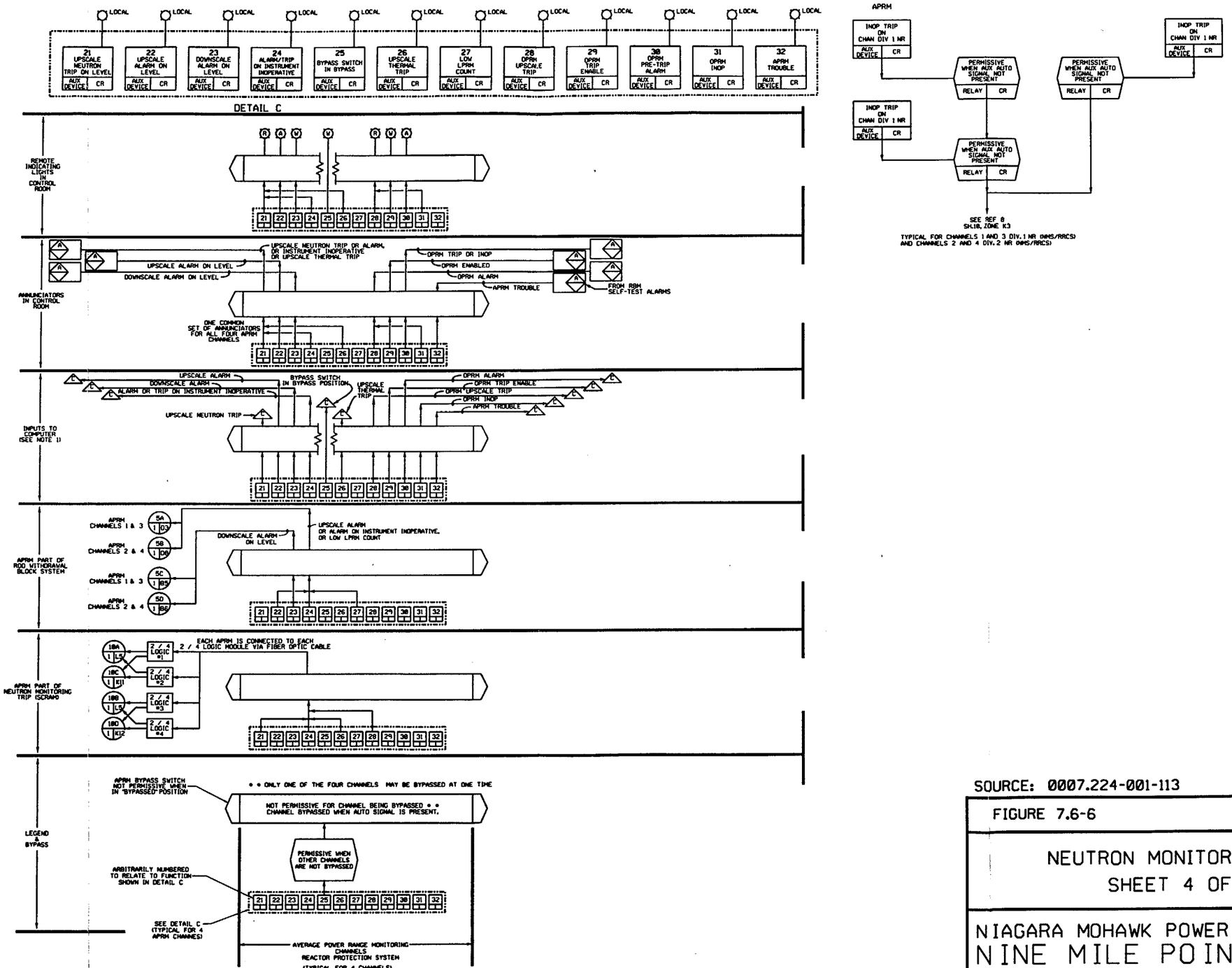

SOURCE: 0007.224-001-113

FIGURE 7.6-6

NEUTRON MONITORING SYSTEM
SHEET 4 OF 7

NIAGARA MOHAWK POWER CORPORATION
NINE MILE POINT-UNIT 2
UPDATED SAFETY ANALYSIS REPORT

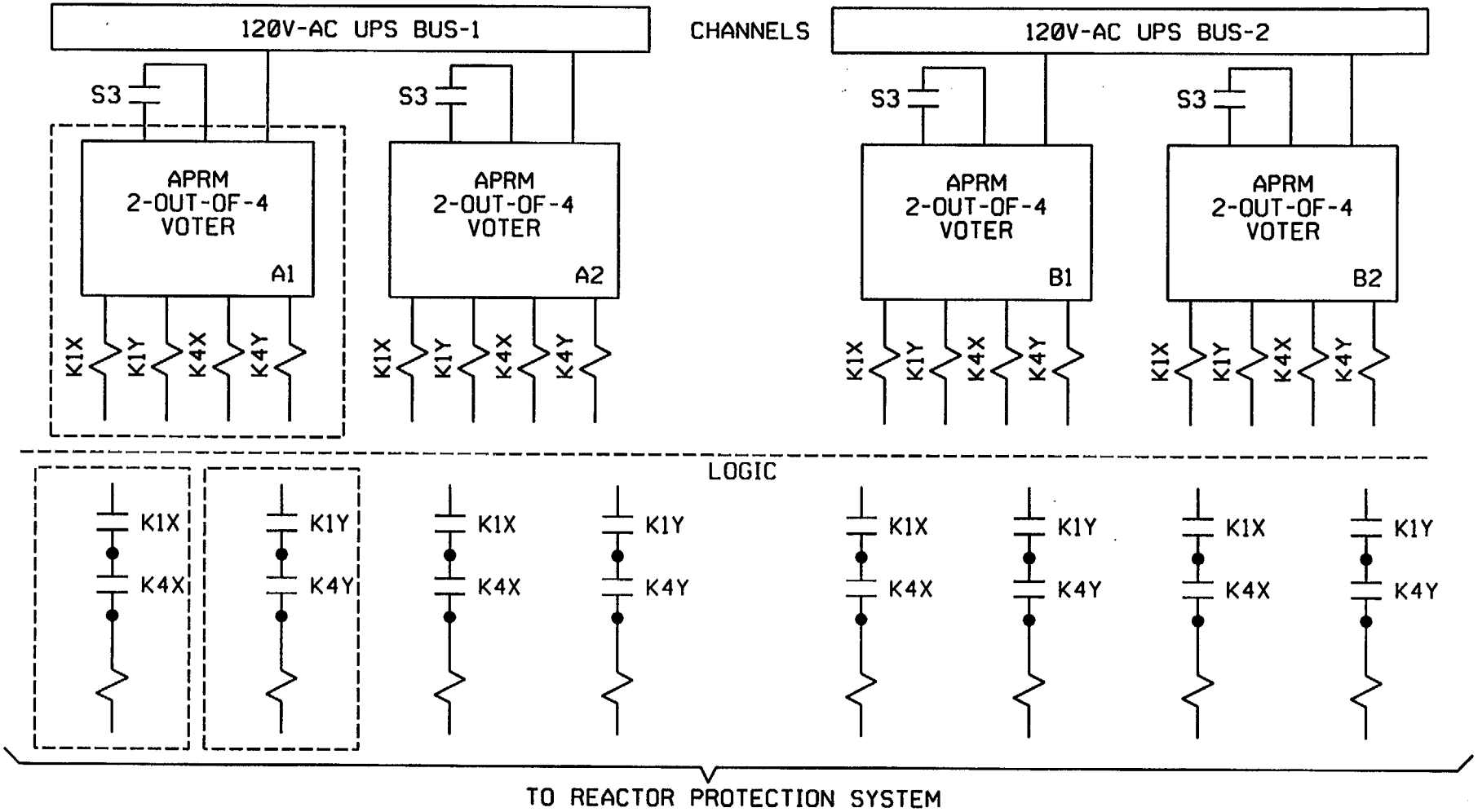

SOURCE: 0007.224-001-031

LEGEND

K1X & K1Y - UPSCALE NEUTRON TRIP OR UPSCALE THERMAL TRIP OR INOP AND NOT BYPASSED

K4X & K4Y - OPRM TRIP OR OPRM INOP AND NOT BYPASSED (JUMPERED OUT FOR FIRST CYCLE)

NOTE: CONTACTS SHOWN IN TRIPPED, UNBYPASSED POSITION

FIGURE 7.6-8

APRM CIRCUIT ARRANGEMENT FOR REACTOR PROTECTION SYSTEM INPUT

NIAGARA MOHAWK POWER CORPORATION
NINE MILE POINT-UNIT 2
UPDATED SAFETY ANALYSIS REPORT

1. Process alarm limits are determined by the computer during computation or as programmed at some fixed value by the Operator.

2. A reasonable limit of the analog input signals programmed.

3. Status change alarms to the Operator.

The alarming sequence consists of typewritten messages via the I/O typers and video monitor messages for the variables that exceed process alarm limits. A variable that is returning to normal is signified by a typewritten and displayable message. The process computer provides to the Operator a means of monitoring, displaying, and recording both NSSS and BOP events. These functions are performed by the following software programs:

1. Status alarm monitor

2. Sequence annunciator

3. Digital trending (special logs)

4. Postdata recall

5. Turbine and generator log

6. Process computer interface with RC, IS, and LPRM

3D Monicore System - The nonsafety 3D Monicore is a core monitoring and predicting computer system that uses PANACEA, a three-dimensional, neutron diffusion theory code for all technical evaluations. The hardware configuration for the system is the 3D Monicore operating on its own computer and receiving the required live plant and TIP data from the Honeywell Process Computer System (PMS), described in Section 7.7.1.6, and rod position data from the NUMAC RWM computer. The 3D Monicore computer performs all 3D Monicore functions. Communication (plant data and alarm messages) between the 3D Monicore computer and the PMS computer and NUMAC RWM is by RS232 links. Logs and displays are output in the control room on a printer and the 3D Monicore computer. The main or backup host in the computer room will provide user access to 3D Monicore functions, logs and color displays. The 3D Monicore computer has built-in security access features that allow only authorized users to access the system.

The 3D Monicore system communicates with the NUMAC PRNM system over the Ethernet through a multi-vendor data acquisition (MVD) system. This allows the transfer of gain adjustment factor values for all LPRMs and percent core thermal power from 3D Monicore to the NUMAC PRNM and the transfer of LPRM detector I/V data from the NUMAC PRNM to 3D Monicore.

3D Monicore software consists of software which obtains plant data and updates its live plant and TIP data bases, executes core performance monitoring and exposure accounting calculations periodically and on demand, and creates output files and logs following such calculations. Special logs of performance parameters and color displays are provided on demand.

3D Monicore provides the capability for monitoring reactor cores consisting of any combination of fuel bundles supplied by GE. There is also a core performance prediction function which is used to study proposed reactor maneuvers with results output to logs and color displays.

7.7.1.7 Neutron Monitoring System (TIP, SRM, RBM)

7.7.1.7.1 Neutron Monitoring System - Traversing In-Core Probe (TIP) Subsystem

7.7.1.7.1.1 System Function

The TIP system allows calibration of LPRM signals by correlating TIP signals to LPRM signals as the TIP is positioned in various radial and axial locations in the core.

Flux readings along the axial length of the core are obtained by fully inserting the traversing ion chamber into one of the calibration guide tubes. Data are then taken as the chamber is withdrawn. These analog data are available as inputs to a recorder and the performance monitoring system. The guide tubes inside the reactor are divided into specific groups. Each group has its own associated TIP machine.

7.7.1.7.1.2 TIP System Operation

A TIP drive mechanism uses a fission chamber attached to a flexible drive cable. The cable is driven from outside the drywell by a gearbox assembly. The flexible cable is contained by guide tubes that penetrate the reactor core. The guide tubes are a part of the LPRM detector assembly. An indexing mechanism allows the use of a single detector in any one of 10 different tube paths. The 10th tube is used for TIP cross calibration with the other TIP machines. The control system provides for both manual and semiautomatic operation. Electronics of the TIP panel amplify and display the TIP signal. Core position versus neutron flux is recorded on an X-Y recorder in the main control room and is provided to the performance monitoring system.

A valve system is provided with a valve on each guide tube entering the drywell. A ball valve and a cable shear valve are mounted in the guide tubing just outside the drywell. The ball valves are closed except when the TIP is in operation. They maintain the leak-tightness integrity of the drywell. A valve is also provided for a nitrogen gas purge line to the indexing mechanisms. The guide tube ball valve is only open when the TIP

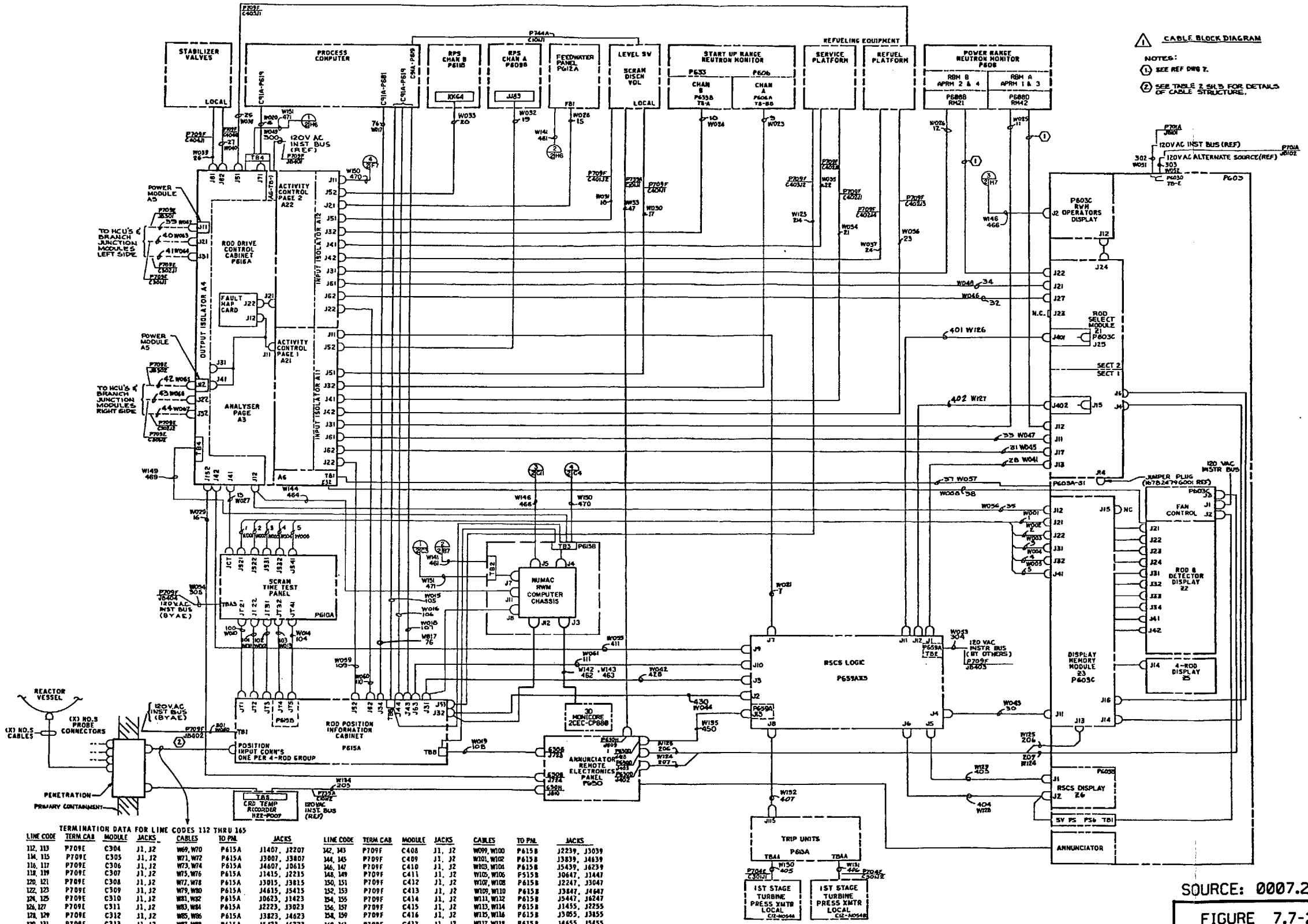

TERMINATION DATA FOR LINE CODES 112 THRU 165

LINE CODE	TERM CAB	MODULE	JACKS	CABLES	TO PNL	JACKS
112, 113	P709E	C304	J1, J2	W69, W70	P615A	J1407, J2207
114, 115	P709E	C305	J1, J2	W71, W72	P615A	J3007, J3807
116, 117	P709E	C306	J1, J2	W73, W74	P615A	J4607, J0615
118, 119	P709E	C307	J1, J2	W75, W76	P615A	J1415, J2215
120, 121	P709E	C308	J1, J2	W77, W78	P615A	J3015, J3815
122, 123	P709E	C309	J1, J2	W79, W80	P615A	J4615, J5415
124, 125	P709E	C310	J1, J2	W81, W82	P615A	J0623, J1423
126, 127	P709E	C311	J1, J2	W83, W84	P615A	J2223, J3023
128, 129	P709E	C312	J1, J2	W85, W86	P615A	J3823, J4623
130, 131	P709E	C313	J1, J2	W87, W88	P615A	J5423, J6223
132, 133	P709E	C314	J1, J2	W89, W90	P615A	J0631, J1431
134, 135	P709E	C315	J1, J2	W91, W92	P615A	J2231, J3031
136, 137	P709E	C316	J1, J2	W93, W94	P615A	J3831, J4631
138, 139	P709E	C317	J1, J2	W95, W96	P615A	J5431, J6231
140, 141	P709E	C318	J1, J2	W97, W98	P615A	J0639, J1439

LINE CODE	TERM CAB	MODULE	JACKS	CABLES	TO PNL	JACKS
142, 143	P709F	C408	J1, J2	W099, W100	P615B	J2239, J3039
144, 145	P709F	C409	J1, J2	W101, W102	P615B	J3839, J4639
146, 147	P709F	C410	J1, J2	W103, W104	P615B	J5439, J6239
148, 149	P709F	C411	J1, J2	W105, W106	P515B	J0647, J1447
150, 151	P709F	C412	J1, J2	W107, W108	P615B	J2247, J3047
152, 153	P709F	C413	J1, J2	W109, W110	P615B	J3847, J4647
154, 155	P709F	C414	J1, J2	W111, W112	P615B	J5447, J6247
156, 157	P709F	C415	J1, J2	W113, W114	P615B	J1455, J2255
158, 159	P709F	C416	J1, J2	W115, W116	P615B	J3055, J3855
160, 161	P709F	C417	J1, J2	W117, W118	P615B	J4655, J5455
162, 163	P709F	C418	J1, J2	W119, W120	P615B	J2263, J3063
164, 165	P709F	C419	J1, J2	W121, W122	P615B	J3863, J4663

SOURCE: 0007.221-001-013

FIGURE 7.7-2

REACTOR MANUAL CONTROL SYSTEM
SHEET 2 OF 35

NIAGARA MOHAWK POWER CORPORATION
NINE MILE POINT-UNIT 2
UPDATED SAFETY ANALYSIS REPORT

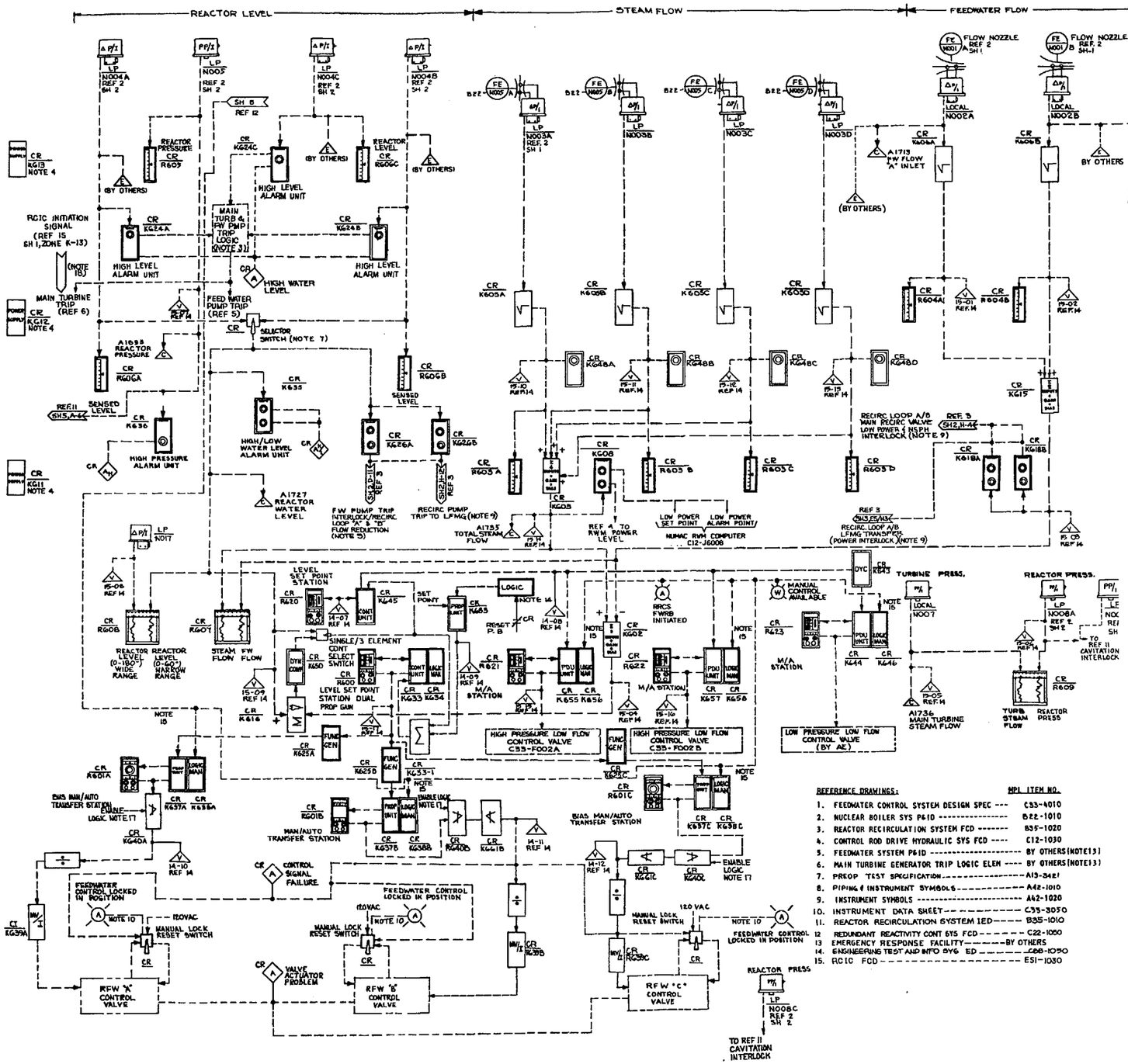

NOTES:

1. ALL EQUIPMENT AND INSTRUMENTS ARE PREFIXED BY SYSTEM NO. C33- (MOTOR DRIVEN) UNLESS OTHERWISE NOTED.
2. DELETED
3. DEVICES K624A, B&C TRIP CONTACTS TO BE WIRED SO THAT 2 OUT OF 3 DEVICES MUST TRIP TO INITIATE MAIN TURBINE STEAM STOP VALVE & FEEDWATER PUMP TRIP.
4. POWER SOURCES TO THE LEVEL TRIP CHANNELS MUST BE FROM INDEPENDENT SOURCES.
5. THE POWER SOURCE FOR THE FEEDWATER INSTRUMENTATION AND CONTROL SYSTEM SHALL HAVE AT LEAST THE SAME DEGREE OF RELIABILITY AS THE POWER SOURCE FOR THE REACTOR FEED/ BOOSTER/CONDENSATE PUMPS.
6. CUSTOMER TO PROVIDE A CIRCUIT BREAKER AUXILIARY CONTACT FROM EACH REACTOR FEEDPUMP CIRCUIT BREAKER.

   GE TO PROVIDE AUXILIARY RELAY LOGIC FROM CUSTOMER (AE C.B AUXILIARY CONTACTS AND CONTACTS FROM CR/K623 (E&) TO INITIATE INDEPENDENT RUNBACK OF REACTOR RECIRC SYSTEM IN EVENT OF A 1 OUT OF 2 RF PUMP TRIP.
7. SWITCHES SHALL BE "SNAP ACTION" SWITCHES. CONTACT OPERATION BEING INDEPENDENT OF SPEED OF CONTROL ROOM OPERATOR ACTION TO AVOID CONTROL SYSTEM TRANSIENTS DURING SWITCHING.
8. FEEDWATER FLOW INTEGRATION IS AVAILABLE VIA NSSS COMPUTER.
9. INDEPENDENT ALARM UNIT RELAYS OR INTERPOSING RELAYS TO BE PROVIDED TO ENSURE SEPARATION OF RECIRC LOOP A CONTROL CIRCUIT FROM LOOP B.
10. CONTROL SWITCH OPERATES AN INTEGRAL RELAY TO RESET FEEDWATER VALVE "LOCK-UP CIRCUIT" AND EXTINGUISH "LOCK-UP" PILOT LAMP.
11. FOR LOCATION AND IDENTIFICATION OF INSTRUMENTS, SEE INSTRUMENT DATA SHEET, REF 10.
12. FOR INDICATING INSTRUMENTS AND TRANSMITTER RANGES SEE INSTRUMENT DATA SHEET (NOTE 11).
13. REFERENCED DOCUMENTS 5 & 6 ARE TO BE SUBMITTED TO GE (APED) BY THE CUSTOMER/AE FOR APED DESIGN COMPLETION.
14. INITIATING SIGNAL FOR SET POINT SET DOWN FUNCTION SHALL BE LEVEL 5 (K625A)
15. ATWS SWITCH TO MANUAL CONTROL AND VALVE CLOSURE.
16. DELETED
17. HIGH SIGNAL LIMITER IS ENABLED DURING THE CONCURRENCE OF A TURBINE TRIP AND LOW FEEDPUMP SUCTION PRESSURE CONDITION ONLY. LIMITER WILL BE BYPASSED DURING ANY OTHER NORMAL OPERATING CONDITION.
18. MAIN TURBINE STOP VALVE TRIP CAN BE INITIATED BY EITHER 2 OUT OF 3 HIGH CHANNEL LEVEL DETECTION (SEE NOTE 3 ABOVE) OR BY THE INITIATION OF RCIC TURBINE OPERATION.

REFERENCE DRAWINGS:

		MPL ITEM NO.
1.	FEEDWATER CONTROL SYSTEM DESIGN SPEC	C33-4010
2.	NUCLEAR BOILER SYS P&ID	B22-1010
3.	REACTOR RECIRCULATION SYSTEM FCD	B35-1020
4.	CONTROL ROD DRIVE HYDRAULIC SYS FCD	C12-1030
5.	FEEDWATER SYSTEM P&ID	BY OTHERS (NOTE 13)
6.	MAIN TURBINE GENERATOR TRIP LOGIC ELEM	BY OTHERS (NOTE 13)
7.	PREOP TEST SPECIFICATION	A13-3421
8.	PIPING & INSTRUMENT SYMBOLS	A42-1010
9.	INSTRUMENT SYMBOLS	A42-1020
10.	INSTRUMENT DATA SHEET	C33-3050
11.	REACTOR RECIRCULATION SYSTEM IED	B35-1010
12.	REDUNDANT REACTIVITY CONT SYS FCD	C22-1050
13.	EMERGENCY RESPONSE FACILITY	BY OTHERS
14.	ENGINEERING TEST AND INFO SYS ED	CDD-1050
15.	RCIC FCD	ESI-1030

LEGEND

E — EMERGENCY RESPONSE FACILITY DROP

C — COMPUTER DROP

A — ENGINEERING TEST AND INFORMATION SYSTEM DROP

SOURCE: 0007.222-001-002

FIGURE 7.7-8

FEEDWATER CONTROL SYSTEM

NIAGARA MOHAWK POWER CORPORATION
NINE MILE POINT-UNIT 2
UPDATE SAFETY ANALYSIS REPORT

TABLE 7B-1 (Cont'd.)

IEEE-384-74 Criteria	Reg. Guide 1.75, Rev. 1 Regulatory Position C	Design Conformance	
		PGCC	BOP
flame-retardant characteristics of the proposed cable installation considering features such as cable insulation and jacket materials, cable tray fill, and cable tray arrangement.			
5.1.1.3 The minimum separation distances specified in Sections 5.1.3 and 5.1.4 are based on open ventilated cable trays of either the ladder or trough type as defined in NEMA VE 1-1971, Cable Tray Systems. Where these distances are used to provide adequate physical separation: 1. Cables and raceways involved shall be flame retardant. 2. The design basis shall be that the cable trays will not be filled above the side rails. 3. Hazards shall be limited to failures or faults internal to the electric equipment or cables. If less separation distances are used, they shall be established as in Section 5.1.1.2.	C.9 This section should be supplemented with Item 5.1.1.3(4) as follows: "Cable splices in raceways should be prohibited." NOTE: Cable splices are not, by themselves, unacceptable. If they exist, the resulting design should be justified by analysis. The analysis should be submitted as part of the Safety Analysis Report.	Open ventilated cable trays and cable splices are not used.	Meets this requirement. Cable splices in raceways are prohibited; splicing in electrical penetrations for cable termination is considered to be exempt from this requirement. Also, condulets and junction boxes used as a termination point, at the load, are considered to be exempt from this requirement.
5.1.2 Identification Exposed Class 1E raceways shall be marked in a distinct permanent manner at intervals not to exceed 15 ft and at points of entry to and exiting from enclosed areas. Class 1E raceways shall be marked prior	C.10 The phrase "at a sufficient number of points" should be understood to mean at intervals not to exceed 5 ft throughout the entire cable length. Also the preferred method of marking cable is color coding.	Meets the requirement.	Meets the requirements except that the cables are marked at intervals of 15 ft instead of 5 ft; see FSAR Section 1.8, RG 1.75 position for the explanations. See FSAR Section 8.3.1.3 for the details of the methods of identification used.

CHAPTER 8

ELECTRIC POWER

TABLE OF CONTENTS

Section	Title	Page
8.1	INTRODUCTION	8.1-1
8.1.1	Utility Grid	8.1-2
8.1.2	Interconnections	8.1-2
8.1.3	Offsite Power System	8.1-3
8.1.4	Onsite Ac Power System	8.1-4
8.1.5	Dc Power System	8.1-4
8.1.6	Uninterruptible Power Supply System	8.1-5
8.1.7	Design Criteria for Plant Auxiliary Power System	8.1-6
8.2	OFFSITE POWER SYSTEM	8.2-1
8.2.1	Description	8.2-1
8.2.1.1	Grid System	8.2-1
8.2.1.2	Main Generator	8.2-4
8.2.1.3	345-kV Switchyard and Generator Step-up Transformer	8.2-5
8.2.1.4	115-kV Switchyard	8.2-6
8.2.1.5	Protection System	8.2-15
8.2.1.6	Instrumentation and Control	8.2-19
8.2.1.7	Switchyard Dc Power Supply	8.2-22
8.2.1.8	Inspection and Testing	8.2-23
8.2.2	Analysis	8.2-23
8.3	ONSITE POWER SYSTEM	8.3-1
8.3.1	Ac Power System	8.3-1
8.3.1.1	Description	8.3-1
8.3.1.1.1	Systems and Identification	8.3-2
8.3.1.1.2	Power Supply Buses	8.3-3
8.3.1.1.3	Reactor Protection System Power Supply	8.3-32
8.3.1.1.4	Cables and Raceways	8.3-36
8.3.1.1.5	Containment Electrical Penetrations	8.3-41
8.3.1.1.6	Safety-Related Motors	8.3-45
8.3.1.1.7	Criteria for Interrupting Capacity of Class 1E Switchgear, Load Centers, Motor Control Centers, and Distribution Panels	8.3-45
8.3.1.1.8	Electric Circuit Protection	8.3-46
8.3.1.1.9	Grounding of Class 1E Systems	8.3-48
8.3.1.1.10	Periodic Testing and Maintenance	8.3-48
8.3.1.2	Analysis	8.3-49
8.3.1.3	Physical Identification of Safety-Related Equipment	8.3-49
8.3.1.3.1	Color Coding	8.3-49
8.3.1.3.2	Alphanumeric Coding	8.3-51

CHAPTER 8

TABLE OF CONTENTS (Cont'd.)

Section	Title	Page
8.3.1.4	Independence of Redundant Systems	8.3-54
8.3.1.4.1	Electrical Isolation	8.3-54
8.3.1.4.2	Physical Separation	8.3-56
8.3.1.5	Conformance with 10CFR50.63, Station Blackout Rule	8.3-63
8.3.1.5.1	Station Blackout Duration	8.3-63
8.3.1.5.2	Station Blackout Coping Capability	8.3-64
8.3.1.5.3	Procedure and Training	8.3-66
8.3.1.5.4	Quality Assurance	8.3-67
8.3.1.5.5	EDG Reliability Program	8.3-67
8.3.2	Dc Power System	8.3-67
8.3.2.1	Description	8.3-67
8.3.2.1.1	General	8.3-67
8.3.2.1.2	Safety-Related Dc Systems	8.3-68
8.3.2.1.3	Nonsafety-Related Dc Power System	8.3-76
8.3.2.2	Analysis	8.3-80
8.3.2.3	Physical Identification of Safety-Related Dc System Equipment	8.3-83
8.3.2.4	Independence of Redundant Systems	8.3-83
8.3.2.5	Station Blackout Capability	8.3-83
8.3.3	Fire Protection for Cable System	8.3-84
8.3.4	References	8.3-85
APPENDIX 8A	FLEXIBLE CONDUIT AND FIRE-RETARDANT TAPE AS SEPARATION BARRIERS	

CHAPTER 8

ELECTRIC POWER

8.1 INTRODUCTION

The electric power system provides sources of power for the unit auxiliary and service loads during normal operation of the plant, plant startup, and normal shutdown, and for the engineered safety feature (ESF) systems during normal, abnormal, and design basis accident (DBA) conditions. The electric power system consists of the offsite power system, the onsite ac power system, and the dc power system. The offsite power system includes the two power circuits provided from the Niagara Mohawk Power Corporation (NMPC) grid system to Nine Mile Point Nuclear Station - Unit 2 (Unit 2). This system provides a reliable source of power for operation of the onsite emergency ac power system under normal, abnormal, or DBA conditions and plant startup and shutdown, and serves as the backup source of power for the normal onsite ac power system.

The onsite ac power system distributes ac power to unit auxiliary and service loads and instrumentation and control system loads. This system is divided into the onsite emergency or safety-related ac power system which feeds safety-related loads, and the onsite normal or nonsafety-related ac power system which feeds all nonsafety-related loads.

The onsite emergency or safety-related ac power system includes the standby ac power system consisting of the standby diesel generators that feed the safety-related loads in case of loss of offsite power (LOOP). The onsite emergency ac power system is divided into three physically separate and electrically independent divisions, any two out of three divisions being capable of bringing the plant to safe shutdown in case of a loss-of-coolant accident (LOCA) or any other DBA. The onsite normal or nonsafety-related ac power system is normally energized from the unit generator. In case of loss of power from its normal source, the system is energized from offsite power sources.

The dc power system provides dc power to protective relaying control, instrumentation, and other dc loads. This system includes the Station batteries, battery chargers, and dc distribution system. The dc power system is divided into the emergency or safety-related dc power system which feeds safety-related dc loads, and the normal or nonsafety-related dc power system which feeds nonsafety-related dc loads. The emergency dc power system is divided into three physically separate and electrically independent divisions.

The electric power system is designed in accordance with General Design Criteria (GDC) of Appendix A, 10CFR50, regulatory guides

(RGs), and applicable industry standards. This system provides adequate capacity, independence, redundancy, and testability. The safety classification of the electric power system is discussed in Section 3.2.2. All safety-related components are designed as Class 1E, QA Category I, and are located in seismic Category I structures.

8.1.1 Utility Grid

NMPC owns and operates generating and transmission facilities that, during the year 1981, produced and delivered over 32 billion kWh of electrical energy, which is approximately one-fourth of the total New York Power Pool (NYPP) production. The NYPP and NMPC grid system are shown on Figure 8.1-1.

NMPC owns and operates 81 hydroelectric stations. It also owns and operates five fossil fuel steam power stations, one nuclear power station, and a number of combustion turbine and diesel units. The total system capability as of December 1978 was 7,056 MW, including a firm purchase commitment of 2,039 MW.

System transmission lines at the beginning of 1986 totaled 5,061 circuit miles, of which 586 miles were at 345 kV, 519 miles were at 230 kV, and 3,956 miles were at 115 kV. The transmission system interconnecting these facilities with those of other utilities and major load centers consists of single-circuit 345-kV lines and single- and double-circuit 230-kV and 115-kV lines. These lines and other lines of the interconnected utilities are arranged in conformance with reliability criteria of power pools (such as the NYPP) and reliability councils (such as the Northeast Power Coordinating Council) to ensure secure and reliable service for the customers.

A 345-kV transmission facility is being provided to connect the Unit 2 generator to the Scriba Substation. The NMPC grid system is described in Section 8.2.

8.1.2 Interconnections

The transmission system from NMPC's existing generation facilities is closely integrated with those of other utilities, not only in the NYPP, but also with adjacent pools. As of January 1986, there were 32 transmission interconnections between the NYPP and neighboring pools and Canadian utilities.

System	Voltage	NMPC	Others	Total NYPP
Hydro Quebec	765 kV	0	1	1
	115 kV	0	2	2
Ontario Hydro	345 kV	0	2	2
	230 kV	1	3	4
	115 kV	1	0	1

System	Voltage	NMPC	Others	Total NYPP
PJM	500 kV	0	1	1
(PA, NJ, MD)	345 kV	0	6	6
	230 kV	1	2	3
	115 kV	1	4	5
New England	345 kV	1	1	2
	230 kV	1	0	1
	138 kV	0	1	1
	115 kV	2	1	3
Total		8	24	32

8.1.3 Offsite Power System

Offsite power is provided to permit functioning of the nuclear safety-related systems and for plant startup and shutdown. The offsite power system consists of two 115-kV circuits from two offsite power sources on separate rights of way. The two circuits are designed so that probability of simultaneous failure is minimal. The circuits terminate at the same switchyard and are connected to two separate reserve Station service transformers that feed separate and independent divisions of the onsite emergency power system. The onsite ac emergency power system is normally energized from offsite power sources. The offsite power sources also provide a backup source for the plant nonsafety-related auxiliary power distribution system. The nonsafety-related auxiliary power distribution system is normally energized from the unit generator through the normal Station service transformer. In case of loss of power from the normal Station service transformer, the system is energized from offsite power sources. Each offsite power circuit has adequate capacity and capability to supply power to the associated safety-related loads under all conditions of plant operation. The two offsite circuits are independent of each other, and this independence is maintained through the onsite power distribution system and connected loads under all conditions of plant operation, except during plant cold shutdown and refueling conditions when the 13.8-kV switchgears are momentarily paralleled for performing maintenance activities.

A separate 115-kV emergency/backup source to either 115-kV normal offsite power source is available and can be connected by aligning disconnect switches in the Scriba Station if either Scriba 345/115-kV transformer bank is out of service. The backup source has adequate capacity and capability to supply power to the associated loads.

The main generator is connected to the NMPC system at Scriba Substation via a 25/345-kV main transformer, the 345-kV switchyard, and a 345-kV transmission line.

The offsite power system is described in Section 8.2.

8.1.4 Onsite Ac Power System

The onsite ac power system consists of the emergency ac power system, the normal or nonsafety-related ac power system, and the standby ac power system. The emergency ac power system includes the plant auxiliary loads required for safe shutdown of the plant in case of a DBA and the associated power distribution system. The normal ac power system includes the plant auxiliary loads, which are required for normal operation of the plant and are not required for safe shutdown of the plant, and the associated power distribution system. The standby ac power system includes the standby diesel generators which energize the emergency power system in case of a LOOP.

The emergency ac power system is divided into three physically separate and electrically independent divisions designated Divisions I, II, and III. Any two out of these three divisions has the capacity and capability to safely shut down the reactor in case of a LOCA or any other DBA. The physical separation and electrical independence of the three divisions are maintained through the distribution system under all conditions of plant operation. The three divisions are color coded for easy identification.

The emergency ac power system is normally energized from offsite power sources via the tertiary winding of the reserve Station service transformers or auxiliary boiler transformer. In case of a LOOP, this system is energized by the standby diesel generators. The auxiliary boiler transformer can also be used to energize either of the two Class 1E Division I or II safety-related buses if required using appropriate operating procedures.

The normal or nonsafety-related ac power system normally receives power from the unit generator via the normal Station service transformer. In case of loss of power from the normal Station service transformer, the system receives power from the offsite sources via a 13.8-kV secondary winding of the reserve Station service transformers. This transfer from normal source to backup source is automatic. The emergency ac power system and normal ac power system are described in Section 8.3.1.

The standby ac power system consists of three standby diesel generators dedicated to the three divisions of the onsite emergency ac power system. The three diesel generators are independent of each other. Each diesel generator provides adequate capacity and capability to start the associated loads in the desired sequence and run them in case of LOOP. The standby ac power system is described in Section 8.3.1.

8.1.5 Dc Power System

The plant dc power system provides dc power to the plant protection, instrumentation, and control systems from Station

batteries and battery chargers. The plant dc power system consists of the emergency or safety-related dc system and normal or nonsafety-related dc system. The emergency dc system is divided into three physically separate and electrically independent divisions corresponding to the three divisions of the onsite emergency ac power system. Each division feeds the dc loads associated with the corresponding division of the onsite power system. Each division has its own 125-V dc battery and primary and backup battery chargers and associated distribution systems. Each charger has 100-percent capacity. Each battery charger is capable of supplying the continuous load on the battery while recharging the battery from the designed minimum charge to the fully charged state in 24 hr. Each battery is capable of supplying the associated dc loads for 2 hr in case of loss of the ac power supply to the battery charger.

The normal or nonsafety-related dc system consists of the normal 125-V dc power system, the normal ±24-V dc power system, and the associated distribution system. The normal 125-V dc system provides dc power for normal switchgear, main transformer, reserve Station service transformers, auxiliary boiler transformer, and other nonsafety-related systems. The normal ±24-V dc system provides dc power for the neutron monitoring system (NMS). There are three 125-V dc batteries and two 24-V dc batteries each connected to a separate bus. Each bus has a battery charger that is capable of supplying the continuous load on the battery while recharging the associated battery from the design minimum charge state to the fully charged state in 24 hr. Each battery is capable of supplying its connected load for 2 hr according to a precalculated load profile. The plant dc system is described in Section 8.3.2.

8.1.6 Uninterruptible Power Supply System

The plant uninterruptible power supply (UPS) system provides 120/208-V ac 1-phase or 3-phase power to the plant essential instrumentation and control loads and plant computer, for which a very high quality and highly-reliable power supply is required. The UPS system consists of the UPS units and the associated distribution system. Each UPS unit has a normal ac supply that normally feeds the UPS, a backup dc supply that feeds the UPS in case of loss of normal ac supply, and an alternate ac supply that will feed the UPS load, in the event of UPS inverter failure or during maintenance mode.

The plant UPS system is divided into the emergency or safety-related UPS system and normal or nonsafety-related UPS system. The emergency UPS system has two 25-kVA units, one associated with Division I and the other associated with Division II of the onsite emergency ac power system. The emergency UPS units receive power from their respective divisional emergency buses. The normal UPS system has eight UPS units, five 75 kVA, two 10 kVA, and one 5 kVA. The 75-kVA and 5-kVA units feed nonsafety-related instrumentation, control, and lighting loads.

The 10-kVA units supply the power for the reactor protection system (RPS) trip channels and other associated loads. The normal UPS units receive power from the onsite normal power distribution system. The plant UPS system is described in Section 8.3.1.

8.1.7 Design Criteria for Plant Auxiliary Power System

The offsite power system and the emergency onsite power system are designed to meet the requirements of applicable sections of the GDC outlined in Appendix A, 10CFR50, and regulatory guides as listed below. The methods of conformance to the GDC and regulatory guides are detailed in Sections 1.8, 3.1, 3.2, 3.10, 3.11, 8.2, and 8.3.

General Design Criterion 2 Design bases for protection against natural phenomena.

General Design Criterion 4 Environmental and missile design bases.

General Design Criterion 5 Sharing of structures, systems, and components.

General Design Criterion 17 Electric power systems.

General Design Criterion 18 Inspection and testing of electric power systems.

General Design Criterion 21 Protection system reliability and testability.

Regulatory Guide 1.6 Independence between redundant standby (onsite) power sources and between their distribution systems.

Regulatory Guide 1.9 Selection, design, and qualification of diesel generator units used as standby (onsite) electric power systems at nuclear power plants.

Regulatory Guide 1.22 Periodic testing of protection system actuation functions.

Regulatory Guide 1.29 Seismic design classification.

Regulatory Guide 1.30 Quality assurance requirements for the installation, inspection, and testing of instrumentation and electric equipment.

Regulatory Guide 1.32 Criteria for safety-related electric power systems for nuclear power plants.

Regulatory Guide 1.40 Qualification tests of continuous-duty motors installed inside the containment of water-cooled nuclear power plants.

Regulatory Guide 1.41 Preoperational testing of redundant onsite electric power systems to verify proper load group assignments.

Regulatory Guide 1.47 Bypassed and inoperable status indication for nuclear power plant safety systems.

Regulatory Guide 1.53 Application of the single-failure criterion to nuclear power plant protection systems.

Regulatory Guide 1.62 Manual initiation of protective actions.

Regulatory Guide 1.63 Electric penetration assemblies in containment structures for light-water-cooled nuclear power plants.

Regulatory Guide 1.73 Qualification tests of electric valve operators installed inside the containment of nuclear power plants.

Regulatory Guide 1.75 Physical independence of electric systems.

Regulatory Guide 1.81 Shared emergency and shutdown electric systems for multi-unit nuclear power plants.

Regulatory Guide 1.89 Qualification of Class 1E equipment for nuclear power plants.

Regulatory Guide 1.93 Availability of electric power sources.

Regulatory Guide 1.100 Seismic qualification of electric equipment for nuclear power plants.

Regulatory Guide 1.106 Thermal overload protection for electric motors on motor-operated valves (MOVs).

Regulatory Guide 1.108 Periodic testing of diesel generators used as onsite power systems at nuclear power plants.

Regulatory Guide 1.118 Periodic testing of electric power and protection systems.

Regulatory Guide 1.128 Installation design and installation of large lead storage batteries for nuclear power plants.

Regulatory Guide 1.129 Maintenance, testing, and replacement of large lead storage batteries for nuclear power plants.

Regulatory Guide 1.131 Qualification tests of electric cables, field splices, and connections for light-water-cooled nuclear power plants.

60 V. The maximum permissible voltage drop between the 600-V emergency load center buses and their connected loads under normal operating conditions is 12 V (for the motor control centers [MCCs], this is broken up as 4 V between the load center and the MCC, and 8 V between the MCC and the motors). However, for MCC feeders having longer cable lengths, voltage drops from 600-V load centers to the MCC and from the MCC to the motor are redistributed within the framework of the total voltage drop limitation of 12 V.

The voltage profile study of the plant electrical power distribution system has been performed using the permissible voltage drops previously stated. This study confirms that the minimum voltage to ensure proper starting of all Class 1E motors at 4.16 kV, as well as 600-V buses, is 460 V at 600-V motor terminals (80 percent of the motor nameplate voltage of 575 V) during the most severe motor starting condition with 4.16-kV and 600-V buses fully loaded. The minimum voltage that will ensure proper running of all Class 1E motors at 4.16 kV, as well as 600-V buses, is 517.5 V at the 600-V motor terminals (90 percent of the motor nameplate voltage of 575 V) under full load conditions of 4.16 kV and 600-V buses.

From the original voltage profile study for the reserve Station service transformers, it is observed that the minimum 115-kV system voltage that will satisfy the preceding conditions for minimum bus voltages is 107.8 kV (93.74 percent of 115 kV) under the worst loading conditions, i.e., when the 13.8-kV buses are unloaded, and the 4.16-kV buses are loaded fully. This voltage (107.8 kV) is less than the minimum 115-kV system voltage of 109.25 kV (95 percent of 115 kV).

Under the opposite conditions, i.e., when the 13.8-kV buses are heavily loaded and the 4.16-kV buses are lightly loaded with the 115-kV system operating at the minimum (109.25 kV), voltage at the 4.16-kV load terminal will be 4.328 kV (108.2 percent of the motor nameplate voltage of 4 kV). This is within 10 percent of the motor nameplate voltage. The current voltage profile study confirms that with the 115-kV system operating between 95% and 105%, the preceding minimum voltages are met for all plant operating conditions.

With grid voltage at minimum level, voltages at the 4.16-kV and 600-V emergency buses under various bus loading conditions are above 80 percent of the nominal bus voltage of 4.16 kV and 600 V during the worst-case starting condition, and above 90 percent of the nominal bus voltage of 4.16 kV and 600 V during the steady-state condition. Voltages at the 4.16-kV and 600-V emergency load terminals are above 80 percent of the rated load voltages of 4 kV and 575 V during starting, and 90 percent of the rated load voltages of 4 kV and 575 V during normal running. The actual voltages are shown in Table 8.2-1.

From the voltage profile study for the auxiliary boiler transformer, it is observed that when the auxiliary boiler is feeding any 4.16-kV emergency bus, the minimum 115-kV system voltage that will ensure at least 80 percent of the motor nameplate voltage at the motor terminals during starting condition, and 90 percent of the motor nameplate voltage at the motor terminals during normal running condition for 4.16-kV, as well as 600-V levels, is 109.25 kV (95 percent of 115 kV), which is within the operating limits of the 115-kV system. With grid voltage at minimum level, and with auxiliary boiler transformer tertiary winding loads less than 5.5 mVa, voltages at the connected 4.16-kV and 600-V emergency buses under various bus loading conditions are above 80 percent of the nominal bus voltage of 4.16 kV and 600 V during the worst-case starting condition, and above 90 percent of the nominal bus voltages of 4.16 kV and 600 V emergency during the steady-state condition. Voltages at 4.16-kV and 600-V load terminals are above 80 percent of the rated load voltages of 4 kV and 575 V during starting, and above 90 percent of the rated load voltages of 4 kV and 575 V during normal running. The actual voltages are shown in Table 8.2-1.

It should be noted that the auxiliary boiler transformer serves only as a backup for either the Division I or II emergency bus and supplies the auxiliary boiler loads. The auxiliary boiler loads are present during plant shutdown and startup conditions. However, for the purposes of observing the worst case, the voltage profile study on the auxiliary boiler transformer assumes that one auxiliary boiler load, as well as one of the emergency bus (Division I or II) loads occur simultaneously. It should also be noted that transfer of one 4.16-kV emergency bus from the reserve Station service transformer to the auxiliary boiler transformer can occur only by manual transfer initiated by the Operator in the absence of any DBA condition.

When the 4.16-kV emergency buses (Divisions I and II) are fed from the emergency diesel generators, the minimum voltages at the 4.16-kV loads under the most severe starting condition and the normal running condition will be 3,268 V (81.7 percent of the nominal load terminal voltage of 4000 V) and 3921 V (98 percent of 4000 V), respectively; the minimum voltages at the 600-V loads under the most severe starting condition and the normal running condition will be 461 V (80.2 percent of the nominal load terminal voltage of 575 V) and 517.5 V (90 percent of 575 V), respectively.

The minimum voltage that will ensure proper operation of all Class 1E control and other loads at 120-V ac level is as follows:

a. The minimum pickup voltage for Gould/ITE starters is 88 V for sizes 0 and 1, 85.2 V for size 2, 85.2 V for size 3, and 91.2 V for size 4; for GE starters, 96 V for all sizes 1 through 3; for FASCO 120 V ac, the minimum

pickup voltage is 88 V for size 0, and for 24 V ac, size 0 is 18 V.

b. The minimum voltage for all other control devices, including SOVs, varies between 90 V and 102 V, as determined by vendor documentation.

All 600-V cables feeding 600 V-120/208-V transformers and 120-V cables are sized to ensure the minimum voltages shown above for 120-V loads at the 120-V load terminals, assuming the minimum voltages (477 V, the worst voltage condition during motor starting) at the 600-V load centers.

The minimum 125-V dc voltage that will ensure proper operation of all Class 1E dc loads is as follows:

a. The minimum operating voltage for all Division I and II dc loads is 101 V (SOVs, etc.). The actual available starting voltage under degraded voltage conditions for safety-related MOVs is calculated on a case-by-case basis and is used in determining if the valve can develop sufficient torque to operate under design conditions.

b. The minimum operating voltage for all Division III dc loads is 110 V (SOVs and MOVs).

All 125-V dc cables are sized to maintain these minimum voltages at the 125-V load terminals, assuming the battery terminal voltage at the minimum of 105 V for Divisions I and II, and 112.5 V for Division III, except in cases where the device (relay trip coils and closing coils) is capable of operating at levels below 101 or 110 V when the cables are sized to maintain these minimum voltages. The minimum pickup voltage for dc starters is 80 percent of coil rated voltage.

The minimum voltages at the various buses and their connected loads under different loading conditions are summarized in Table 8.2-1.

Two levels of undervoltage protection are provided at the 4.16-kV emergency buses: one to detect LOOP, and one to detect degraded voltage conditions. The LOOP relay is set to trip the offsite power supply breaker, alarm the control room, and initiate emergency diesel generator starting when the 4.16-kV bus voltage drops to 3212.86 V, which corresponds to 430.6 V at the 600-V buses. The time setting is approximately 3.0 sec.

In order to maintain 90-percent voltage at the 600-V motor terminals, it is calculated that the degraded voltage relay would have to be set at 3,847 V. This assumes that all of the 600-V connectable load is being supplied simultaneously from the load center. Setting the degraded voltage relay at 3,847 V corresponds to 531.7 V at the 600-V buses. With the maximum of

12-V permissible drop between the 600-V load center bus and any 600-V load during normal running, this corresponds to 519.7 V at the 600-V load terminals, which is 90.3 percent of the rated load voltage of 575 V.

Assuming the maximum variation of the degraded voltage relay setpoint due to accuracy, calibration, drift, environmental effects, etc., the voltage at the 600-V motor terminals may reach about 88.27 percent of the motor rated voltage during a degraded

THIS PAGE INTENTIONALLY BLANK

voltage condition. An analysis has been performed to show that this will not affect the qualified thermal life of the motors.

The degraded voltage relay is provided with two time delays. The first time delay is approximately 8 sec. Following this time delay, the degraded voltage condition is alarmed in the control room under normal plant operating conditions. Under accident conditions, the offsite power supply breaker will trip, and the emergency diesel generator will start following this time delay. The second time delay is set approximately 30 sec. Following this time delay, the degraded voltage condition will be alarmed in the control room, the offsite power supply breaker will trip, and the emergency diesel generator will start under normal plant operating conditions.

When the emergency buses are energized from the diesel generators, the undervoltage protection scheme prevents any load shedding during sequencing of emergency loads on the bus under an accident condition. When the emergency buses are energized from the offsite source (preferred source), the undervoltage protection scheme is functionally operational.

The undervoltage protection scheme uses coincident logic (two out of three phases) to preclude spurious trips of the offsite power sources. The relays and other devices associated with the undervoltage protection scheme are Class 1E and are located on the respective Class 1E switchgear.

The voltages at different buses under various loading conditions obtained from the voltage profile study will be verified by actual measurement (Table 14.2-90) prior to initial full-power reactor operation.

Stability Considerations

The designs and operation of the interconnected power system must be such that system and generator unit stability will be maintained on those facilities not directly involved in clearing the fault. Northeast Power Pool Coordination Council (NPCC) criteria calls for this testing to be done for permanent, three-phase, normally cleared faults and for permanent, single-phase faults with delayed clearing.

A transient stability study was conducted to demonstrate compliance with the NPCC criteria. Figure 8.2-9 shows the system configuration upon which stability cases were based. A criteria fault of any kind does not cause system instability or result in LOOP to safety-related systems.

Grid Availability

NMPC's records indicate that there has been one trip of the Nine Mile-Volney No. 9 line since its original energization, occurring on May 17, 1983, at 10:41 am. Power was restored immediately,

8.3 ONSITE POWER SYSTEM

This section describes the onsite ac power system, onsite dc power system, and fire protection for cable systems.

8.3.1 Ac Power System

8.3.1.1 Description

The onsite ac power system includes all equipment and systems required to provide ac power to all unit auxiliaries and service loads under all conditions of plant operation. This consists of the 13.8-kV switchgear, 4.16-kV switchgear, 600-V load centers, MCCs, various distribution panels, UPS systems, cables and raceways, the standby diesel generators, and the system loads. The onsite ac power system is divided into two distinct categories: emergency or safety related and normal or nonsafety related. The equipment, systems, and loads required to safely shut down the reactor in case of DBA are designated nuclear safety related or Class 1E; the others are nonsafety related or non-Class 1E.

The onsite emergency ac power system is designed to meet the requirements of the general design criteria of 10CFR50, and the applicable regulatory guides. This system has adequate capacity, independence, redundancy, and testability to ensure power supply to all ESF systems under all conditions of plant operation. The onsite emergency ac power system is divided into three independent divisions that are electrically isolated and physically separated from each other. Each division has its own dedicated standby diesel generator that is separate from and independent of the standby diesel generator of any other division. Each division feeds a separate load group. The independence of the three systems is maintained throughout the distribution system and loads.

The onsite power system has adequate capacity to supply all emergency loads under all conditions of plant operation. Any two of the three divisions with their associated standby diesel generators are capable of supplying the emergency loads required to shut down the reactor in case of a DBA.

The redundancy of the onsite ac power system facilitates the ability to test any system in any one division during normal plant operation without compromising any safety function. The essential systems and components have features for test operation under normal plant operating conditions. The plant physical layout and equipment locations are designed to permit inspection under all operating conditions.

The equipment and systems of the plant onsite emergency ac power system are qualified for operating in their respective environmental conditions (temperature, pressure, humidity, and radiation) for the specified service life in accordance with the

applicable regulatory guides. All Class 1E equipment and systems are Category I and are located in Category I structures.

The plant onsite ac power systems are shown on Figures 8.3-1 through 8.3-4. The Class 1E onsite emergency ac power system is normally energized from offsite power sources through the reserve Station service transformers. In case of LOOP, this system is energized from standby diesel generators. The nonsafety-related onsite ac power system is normally energized from the normal Station service transformer. In case of loss of power from the normal Station service transformer, this system is energized from offsite power sources through the reserve Station service transformers.

Originally, the failure modes and effects analysis (FMEA) for the ac power system was contained in the Unit 2 FMEA document, which is historical. FMEAs for plant systems are now performed and controlled by the design process.

8.3.1.1.1 Systems and Identification

Safety-Related Systems and Identification

The three divisions of the onsite emergency ac power system are designated as Divisions I, II, and III. Divisions I and II supply all the emergency unit auxiliary and service loads, divided into two redundant load groups. Division III supplies the high-pressure core spray (HPCS) system loads. The three divisions are readily identifiable by the following color coding:

Division I	Green
Division II	Yellow
Division III	Purple

All the equipment, cables, raceways, motors and other electrical loads, etc., associated with Division I are identified with green color coding. Similarly, Division II and III equipment, cables and raceways, motors and other electrical loads, are identified with yellow and purple color coding, respectively. The method of identification is described in Section 8.3.1.3.

Divisions I and II of the onsite emergency ac distribution system feed their redundant load groups as shown in Tables 8.3-1 and 8.3-2, respectively.

Division III feeds all the loads associated with the HPCS system, as listed in Table 8.3-3. The plant safety-related loads are listed in Table 8.3-4, which also indicates their power sources.

Onsite Normal Ac Power Systems and Identification

The portions of the onsite ac power system that are required for normal operation of the plant, but not required for safe shutdown of the reactor in case of a DBA, are classified as nonsafety related or normal. These systems are identified by black or no-color coding. The normal ac system also encompasses two stub buses, which can be connected to the emergency Division I and Division II buses, respectively, in the absence of any DBA (Section 8.3.1.1.2, 600-V Distribution System). The onsite normal ac power system feeds the nonsafety-related loads associated with, but not limited to, the following systems:

1. Main condensate and feedwater system.
2. Reactor recirculation system.
3. Condensate makeup and drawoff system.
4. Component cooling water system.
5. Plant cooling and ventilation system.
6. Service water system (nonsafety portion).
7. Circulating water system.
8. Reactor water cleanup system.
9. Other nonsafety-related auxiliary systems.

8.3.1.1.2 Power Supply Buses

13.8-kV Distribution System

The 13.8-kV distribution system is shown on Figure 8.3-1. There are five nonsafety-related and four safety-related 13.8-kV buses. The nonsafety-related buses are designated 2NPS-SWG001, 2NPS-SWG002, 2NPS-SWG003, 2NPS-SWG004, and 2NPS-SWG005. The safety-related buses are designated 2EPS*SWG001, 2EPS*SWG002, 2EPS*SWG003, and 2EPS*SWG004. Buses 2NPS-SWG001 and 2NPS-SWG003 supply 13.8-kV nonsafety-related motors, 2,500 hp and above, the nonsafety-related 4.16-kV buses via auxiliary Station transformers 2ATX-XS1 and 2ATX-XS3, and the 600-V normal load centers 2NJS-US1 through 2NJS-US4 and 2NJS-US7 through 2NJS-US10 via normal load center transformers. The 13.8-kV bus 2NPS-SWG001 also feeds safety-related 13.8-kV buses 2EPS*SWG001 and 2EPS*SWG002. The 13.8-kV bus 2NPS-SWG003 feeds safety-related 13.8-kV buses 2EPS*SWG003 and 2EPS*SWG004. Normal 13.8-kV bus 2NPS-SWG002 supplies power to the two auxiliary electric boilers.

The normal 13.8-kV buses 2NPS-SWG001 and 2NPS-SWG003 are normally energized from the normal Station service transformer 2STX-XNS1. In case of loss of power from the normal source, these buses are

automatically transferred to the offsite power sources via reserve Station service transformers 2RTX-XSR1A and 2RTX-XSR1B, respectively. If one of the two reserve Station service transformers is out of service for maintenance, and 2NPS-SWG001 and 2NPS-SWG003 are to be transferred onto the remaining reserve Station service transformer upon loss of 2STX-XNS1 for unit trip or LOCA, then 13.8-kV buses are also automatically transferred onto the reserve Station service transformer in service, provided the breakers are lined up for this configuration. This transfer is accomplished in two modes, fast or slow. Automatic fast transfer from normal to reserve source occurs within 6 cycles after loss of normal power, except under conditions that would prohibit such transfer. Automatic transfer is prohibited under the following conditions:

1. Reserve Station service transformer 2RTX-XSR1A 13.8-kV side neutral grounding switch closed. This applies to reserve Station service transformer 2RTX-XSR1A and 3.8-kV circuit breaker 1-1 only. There is no neutral grounding switch on the 13.8-kV side of the reserve Station service transformer 2RTX-XSR1B (see Figure 8.3-1). The switch is closed when reserve Station service transformer 2RTX-XSR1A feeds 13.8-kV bus 2NPS-SWG002, which is solidly grounded.

2. Reserve Station service transformer electrical fault.

3. 13.8-kV switchgear (2NPS-SWG001 or 2NPS-SWG003) electrical fault.

4. 115-kV transfer trip.

5. Control switch ACB 1-16 in close.

If the automatic fast transfer is not accomplished within 6 cycles, an automatic slow transfer is provided after sufficient time delay to allow for decay of voltage on the de-energized bus and shedding of selected motors to prevent excessive surges upon restart of the equipment. The automatic slow transfer also occurs in case of sustained bus undervoltage condition.

Each bus has a manually-controlled air circuit breaker for access to its normal source and an automatically- or manually-controlled air circuit breaker for access to its reserve source. Each bus also has a breaker cubicle for connection to the alternate reserve power source.

The 13.8-kV normal bus 2NPS-SWG002 is fed from one of the offsite power sources through auxiliary boiler transformer 2ABS-XI. An alternate feed to the auxiliary boiler transformer is provided through reserve transformer bus A as described in Section 8.2.1.4 under auxiliary boiler transformer.

During normal plant operation condition, transfer of any of the normal 13.8-kV buses from its normal reserve transformer source to the alternate reserve source can be performed by taking out the normal reserve source breaker and inserting it into the alternate reserve source breaker cubicle.

During plant cold shutdown condition and refueling operations, transfer of any of the normal 13.8-kV buses from its normal reserve transformer source to the alternate reserve source can be performed by taking out the normal source breaker and inserting it into the alternate reserve source breaker cubicle in accordance with plant operating procedures.

One reserve Station service transformer, 2RTX-XSR1A or 2RTX-XSR1B, may feed both 2NPS-SWG001 and 2NPS-SWG003 as long as the total loading is below the continuous nameplate rating. This nameplate rating should not be exceeded in any case even after the completion of fast and or slow transfer of power to the offsite power source(s) at unit trip.

Recirculation Pump Trip System

The 13.8-kV safety-related buses 2EPS*SWG001 and 2EPS*SWG002 and 2EPS*SWG003, and 2EPS*SWG004 feed the reactor recirculation pumps 2RCS*P1A and 2RCS*P1B, respectively. The recirculation pump motors are not safety related. The only safety function of this safety-related 13.8-kV system is to trip the recirculation pumps when required. This is ensured by providing two safety-related circuit breakers in series for each of the recirculation pumps. Two breakers receive trip signals from two separate divisions of the RPS.

The 13.8-kV normal buses 2NPS-SWG004 and 2NPS-SWG005 are energized by two low-frequency motor generator (LFMG) sets, 2RCS-MG1A and 2RCS-MG1B, respectively, which furnish 15 Hz power supply to the recirculation pump motors on low-speed operation. These buses and LFMG sets are classified as nonsafety related.

The 13.8-kV switchgear is rated for 1,000 MVA interrupting capacity. The nonsafety-related main breakers and the main buses are rated for 3,000 amps continuous duty, except for switchgear buses 2NPS-SWG004 and 2NPS-SWG005, which are rated for 1,200 amps.

The feeder breakers are rated for 1,200 amps continuous duty. The safety-related buses 2EPS*SWG001 through 2EPS*SWG004 are rated for 1,200 amps continuous duty.

Two normal dc buses 2BYS-SWG001A and 2BYS-SWG001B provide control power for the normal 13.8-kV buses. One of the dc sources supplies control power to the main and tie breakers and associated relaying. The other dc source supplies control power to the feeder breakers and the associated relaying. Each dc bus is fed by a separate battery. Each dc bus can be connected to

the other dc source if required without paralleling the two dc sources.

The dc control power for safety-related buses 2EPS*SWG001 and 2EPS*SWG003 are supplied from dc MCC 2DMS*MCCA1; whereas dc MCC 2DMS*MCCB1 provides control power for buses 2EPS*SWG002 and 2EPS*SWG004. The dc MCCs belong to the redundant Divisions I and II, respectively, of the safety-related power distribution system. Nonsafety-related buses 2NPS-SWG004 and 2NPS-SWG005 receive control power from normal dc buses 2BYS-SWG001A and 2BYS-SWG001B. The Division III dc power supply is discussed in Section 8.3.2.

4.16-kV Distribution System

The 4.16-kV distribution system consists of the normal or nonsafety-related 4.16-kV distribution system and the emergency 4.16-kV distribution system. The normal 4.16-kV distribution system (Figure 8.3-1) consists of eight normal 4.16-kV switchgear buses, 2NNS-SWG011 through 2NNS-SWG018. Buses 2NNS-SWG014 and 2NNS-SWG011 are fed from normal 13.8-kV bus 2NPS-SWG001 via auxiliary transformer 2ATX-XSI. Buses 2NNS-SWG013 and 2NNS-SWG015 are fed from normal 13.8-kV bus 2NPS-SWG003 via auxiliary transformer 2ATX-XS3. Bus 2NNS-SWG012 is normally connected to bus 2NNS-SWG011 through a normally closed circuit breaker, and to bus 2NNS-SWG013 through a normally open circuit breaker. Buses 2NNS-SWG011, 2NNS-SWG012, and 2NNS-SWG013 supply 4.16-kV non-Class 1E motor loads. Buses 2NNS-SWG011 and 2NNS-SWG013 also feed the two LFMG sets (2RCS-MG1A and 2RCS-MG1B) for the reactor recirculation pump motors.

Two 4.16-kV buses, 2NNS-SWG014 and 2NNS-SWG015, designated as the plant stub buses, feed 4.16-kV motor loads, from 150 to 300 hp, and 600-V load center transformers for load centers 2NJS-US5 and 2NJS-US6. These two buses have some functions distinct from other normal 4.16-kV buses. They feed selected redundant normal plant loads. In case of loss of power from the 13.8-kV normal buses 2NPS-SWG001 and 2NPS-SWG003, and in the absence of a LOCA condition, these buses can be manually connected to the associated division emergency diesel generator buses 2ENS*SWG101 and 2ENS*SWG103, respectively. The stub buses, however, are physically separated and electrically isolated from the safety-related system in such a way that any failure in the normal distribution system will not interfere with the safety function of the emergency distribution system. Circuit breakers 101-11 (on bus 2ENS*SWG101) and 103-8 (on bus 2ENS*SWG103) will trip automatically under the following conditions:

1. LOCA signal (e.g., high drywell pressure or low reactor water level).

2. Sustained undervoltage on buses 2ENS*SWG101 and 2ENS*SWG103, respectively.

3. Overcurrent or ground fault on buses 2NNS-SWG014 and 2NNS-SWG015, respectively.

For a unit turbine generator trip condition, stub buses 2NNS-SWG014 and 2NNS-SWG015 are fed from offsite power sources through the normal 13.8-kV buses 2NPS-SWG001 and 2NPS-SWG003, respectively.

Normal switchgear buses 2NNS-SWG016, 2NNS-SWG017, and 2NNS-SWG018 are used to interconnect 4.16-kV tertiary windings of the reserve Station service transformers 2RTX-XSR1A and 2RTX-XSR1B, and auxiliary boiler transformer 2ABS-XI, respectively, to the 4.16-kV emergency buses.

The 4.16-kV normal switchgear is located in the normal switchgear building at el 261 ft. The switchgear is rated 250 MVA interrupting capability. The main and tie breakers are rated for 2,000 amps continuous duty. The normal 4.16-kV switchgear receives control power from two normal dc buses. One bus supplies control power to the main and tie breakers and associated relaying. The other dc bus supplies control power to the feeder breakers and associated relaying. Each dc bus has its own battery and can be connected to the alternate dc source without paralleling the dc sources.

The emergency 4.16-kV distribution system is illustrated on Figure 8.3-2. There are three 4.16-kV emergency switchgear buses, 2ENS*SWG101, 2ENS*SWG102, and 2ENS*SWG103. Bus 2ENS*SWG101 is dedicated to Division I of the Station emergency power distribution system; buses 2ENS*SWG103 and 2ENS*SWG102 are dedicated to Divisions II and III, respectively. Buses 2ENS*SWG101 and 2ENS*SWG103 feed all Station redundant safety-related loads, except the HPCS system loads. The HPCS system loads are fed by bus 2ENS*SWG102. All three divisions are normally energized from offsite power sources through the tertiary winding of the reserve Station service transformers, buses 2ENS*SWG101 and 2ENS*SWG102 from transformer 2RTX-XSR1A, and bus 2ENS*SWG103 from transformer 2RTX-XSR1B. The tertiary winding of the auxiliary boiler transformer 2ABS-X1 provides a backup for buses 2ENS*SWG101 and 2ENS*SWG103. Each switchgear has a breaker cubicle (101-10 and 103-2) for connection to the backup source. Bus 2ENS*SWG102 also has a breaker cubicle (102-5) for connection to the reserve transformer 2RTX-XSR1B, if required. The cubicle-only positions do not have a circuit breaker installed in them. They are interlocked with the normal power source breakers; breaker 101-10 can only be closed when breaker 101-13 is open, the breaker racked out and inserted into cubicle 101-10, and other conditions of transfer are satisfied. Similarly, breaker 103-2 can only be closed when breaker 103-4 is open, the breaker racked out and inserted into cubicle 103-2, and other conditions of transfer are satisfied; the same logic follows for breakers 102-5 and 102-4. The tertiary windings of the reserve Station service transformers are designed to carry the greater of the loads on buses 2ENS*SWG101 and 2ENS*SWG102 or

2ENS*SWG103 and 2ENS*SWG102, respectively, plus one stub bus load, to permit such transfers. The auxiliary boiler tertiary winding is sized to carry all the connected loads on either of the buses 2ENS*SWG101 or 2ENS*SWG103.

The transfer of a 4.16-kV emergency bus from the reserve transformer to the auxiliary boiler transformer feed can occur only by manual transfer initiated by the Operator in absence of any DBA condition. Necessary mechanical interlocks are provided so that auxiliary boiler transformers can only supply one emergency bus at a time.

Manual transfer from onsite to offsite source is accomplished by momentarily paralleling the incoming supply with the running supply from the standby diesel generator and then manually tripping the running supply.

Each of the three 4.16-kV emergency buses has a standby diesel generator to carry its loads in case of a LOOP or in case of a sustained degraded voltage condition on the offsite source. For the 4.16-kV emergency bus undervoltage trip functions, all three-phase voltages are monitored by individual phase undervoltage relays. To initiate a trip function, only two of the phase undervoltage relays need to operate. The diesel generator 2EGS*EG1 feeds bus 2ENS*SWG101, diesel generator 2EGS*EG2 feeds bus 2ENS*SWG102, and diesel generator 2EGS*EG3 feeds bus 2ENS*SWG103. Each emergency diesel generator is separate from and independent of the other diesel generators so that failure of one diesel generator will not impede the operation of the other diesel generators. In case of a loss of voltage or sustained degraded voltage from reserve transformer 2RTX-XSR1A, emergency bus 2ENS*SWG101 undervoltage relay picks up, trips the offsite power main breaker 101-13 and all feeder breakers, except the emergency 600-V load center breakers 101-14 and 101-2, and starts the emergency diesel generator 2EGS*EG1. When the generator attains its rated speed, voltage, and frequency, the generator breaker 101-1 closes. Within 10 sec from the starting signal, the load sequencing begins. Similarly, the emergency bus 2ENS*SWG103 is transferred to its emergency diesel generator 2EGS*EG3 upon loss of voltage or sustained degraded voltage from reserve transformer 2RTX-XSR1B. Upon loss of voltage or degraded voltage from reserve transformer 2RTX-XSR1A or 2RTX-XSR1B, the emergency bus 2ENS*SWG102 is also transferred to its emergency diesel generator 2EGS*EG2 in a similar way, except that no load shedding on the bus is required. If either of emergency buses 2ENS*SWG101 or 2ENS*SWG103 is powered from the auxiliary boiler transformer source and this source is subsequently lost, the bus will automatically be transferred to its emergency diesel generator. In case of a LOCA, the emergency diesel generators start and run on no-load so that they can pick up loads in the event a delayed LOOP should occur following a LOCA.

The emergency 4.16-kV switchgear is rated for 250 MVA interrupting capacity. All breakers are rated for 1,200 amps continuous duty. Each of the Division I and II switchgear has two dc control power buses supplied by its associated divisional emergency dc power system. Class 1E battery 2BYS*BAT2A feeds bus 2ENS*SWG101 via Class 1E 125-V dc switchgear 2BYS*SWG002A. Class 1E battery 2BYS*BAT2B feeds bus 2ENS*SWG103 via Class 1E 125-V dc switchgear 2BYS*SWG002B. One control bus supplies control power to the main breakers, associated relaying, and control circuits; the other bus supplies control power for the feeder breakers, associated relaying, and control circuits. The two control buses are supplied by two separate cables originated at the same breaker on the dc bus. The two cables are routed separately. Each control bus can be connected to the other dc feeder via a pullout fuse block arrangement. For the Division III (HPCS) switchgear, Class 1E battery 2BYS*BAT2C feeds bus 2ENS*SWG102 via the Class 1E 125-V dc distribution panel located in 2CES*IPNL414. This control bus supplies control power to the main and feeder breakers, associated relaying, and control circuits. An additional bus, from a separate breaker in 2CES*IPNL414, supplies 125-V dc to Class 1E panel 2EGS*PNL028 for additional Division III protective relaying circuits.

Emergency 4.16-kV switchgear buses are electrically independent and physically isolated from each other so that any failure in one division will not jeopardize the safety function of any other division. Emergency 4.16-kV switchgear buses are located in separate rooms in the emergency switchgear room at el 261 ft in the control building, a Category I structure.

600-V Distribution System

The 600-V distribution system consists of the normal and emergency 600-V load centers, 600-V MCCs, and 600-V power distribution panels. The load centers feed the MCCs, 600-V distribution panels, 600-V motor loads from 50 to 200 hp, and other loads from 60 to 475 kW. The MCCs feed plant auxiliary motor loads from 1/2 to 50 hp, MOVs from 1/6 to 50 hp, and other miscellaneous loads. The 600-V distribution panels feed 120/240-V and 120/208-V distribution panels through 600-V to 120/240-V distribution transformers, plant UPS systems, lighting loads, and other miscellaneous loads.

The plant normal 600-V distribution system is illustrated on Figure 8.3-3. All normal load centers feed nonsafety-related loads. The normal load centers, 2NJS-US1 through 2NJS-US4 and 2NJS-US7 through 2NJS-US10, are double-ended, split bus design and are fed from the normal 13.8-kV switchgear buses. The normal load center transformers are rated as follows:

1. 2NJS-US1 through 2NJS-US4 and 2NJS-US7 through 2NJS-US10 are rated for 1,500/2,025 kVA, (80°/150°C temperature rise).

2. 2NJS-US5 and 2NJS-US6 are rated 1,000/1,350 kVA, (80°/150°C temperature rise).

The load center breakers are rated for 22,000 amps symmetrical short-circuit capability. The normal stub bus load centers 2NJS-US5 and 2NJS-US6 with their associated MCCs have the distinct function of feeding selected plant loads such as the UPS systems, battery chargers, etc. These load centers are double ended without tie breakers and are normally fed from the 4.16-kV stub buses 2NNS-SWG014 and 2NNS-SWG015. Each normal 600-V load center can receive dc control power from either of the normal dc buses 2BYS-SWG001A and 2BYS-SWG001B.

The 600-V emergency distribution system is illustrated on Figure 8.3-4. The emergency 600-V load centers 2EJS*US1 and 2EJS*US3 are fed from their respective divisional 4.16-kV switchgear buses 2ENS*SWG101 and 2ENS*SWG103. These load centers are indoor metal-enclosed type with drawout circuit breakers. The load centers are double ended without any bus tie breaker. The load center transformers are rated at 1,500/2,025 kVA (80°/150°C temperature rise). The feeder breakers are rated for 22,000 amps interrupting capability. The emergency load centers feed plant emergency motor loads from 150 to 180 hp, other emergency loads from 60 to 120 kW, emergency MCCs, and 600-V emergency power distribution panels belonging to their respective divisions. There is no load center associated with Division III. The Division III 4.16-kV emergency bus 2ENS*SWG102 supplies Division III emergency MCC 2EHS*MCC201 through 4160/600-V distribution transformer 2EJS*X2. The emergency load centers receive dc control power from their respective divisional 125-V dc buses.

The emergency MCCs 2EHS*MCC101, 2EHS*MCC102, and 2EHS*MCC103 feed Division I emergency motor loads from 1/2 to 50 hp including MOVs from 1/6 hp, heaters, and other miscellaneous loads. MCCs 2EHS*MCC301, 2EHS*MCC302, and 2EHS*MCC303 feed similar emergency loads belonging to Division II. Division III MCC 2EHS*MCC201 feeds all Division III 600-V to 120-V power distribution panels through 600-V to 120/240-V distribution transformers in addition to Division III HPCS motor and other loads.

The main incoming and bus tie breakers for Division I and II MCCs are molded case, nonautomatic type and have a continuous rating of 800 amps (mains) and 600 amps (ties). The branch circuit molded case circuit breakers in MCCs have a symmetrical short-circuit capability of 14,000 amps (minimum) for combination motor control units, or 22,000 amps (minimum) for feeder tap units. The 600-V distribution panels use breakers of 18,000 or 22,000 amps (minimum), interrupting capability for branch circuit protection depending on panel requirements.

The intent of dual feeds to the load centers and MCCs is to increase availability of power source to these buses. The feeder cables are routed separately.

The MCCs feeding various plant redundant loads are of two-bus design to increase reliability of power supply. The MCCs feeding one group of load only are of single-bus design.

For the MCCs that are of two-bus design, each feeder is sized to carry the entire MCC loads with the tie breaker closed.

Key interlocks are provided to ensure that no more than two out of three breakers (two feeder breakers and one tie breaker) are closed at any time, other than for the momentary paralleling during the transfer of supply power. Normally there are two keys; however, during parallel operation a third key is used.

Normally the load center transformers do not operate in parallel. However, momentarily parallel operation to transfer the unit sub on to the alternate transformer is acceptable. For a single-bus configuration, one load center transformer feeds the load center (see Figure 8.3-2). For the MCCs with a two-bus configuration (normally open tie circuit breakers), one load center transformer normally feeds each bus, and if one of the two transformers fails, the remaining transformer is generally capable of carrying the entire load center load. However, normal load centers 2NJS-US3, -US7, and -US9 may have conditions which, in the absence of administrative load reductions, will require that two transformers must be in service.

Emergency lighting panels 2LAC*PNL100A and 2LAC*PNL300B feed safety-related 600-V, 120/208-V, 3-phase and 120/240-V, 1-phase loads, including the safety-related UPS systems, safety-related battery chargers, safety-related heating circuits, and emergency lighting belonging to their respective divisions.

The emergency load centers, MCCs, and 600-V distribution panels of Divisions I, II, and III are physically isolated from and electrically independent of each other so that any single failure in one division will not impede the safety function of any other division.

<u>120/240-V Distribution System</u>

The plant 120/240-V distribution system provides power for the plant instrumentation and control systems, plant auxiliary motor loads below 1/2 hp, including MOVs below 1/6 hp, lighting loads, and other miscellaneous 120-V auxiliary loads. The system consists of the 600-V to 120/240-V and 600-V to 120/208-V dry-type distribution transformers, 120/208-V and 120/240-V distribution panels, and 120-V UPS system. The plant normal 120/240-V distribution system is illustrated on Figure 8.3-3. The emergency 120/240-V distribution system is illustrated on Figure 8.3-4. The distribution transformers and their associated panels are located near the loads they feed in different areas of the plant. The distribution panels are of NEMA-12 or NEMA-3R construction; branch circuits are protected by molded-case circuit breakers or with fusible switches.

The emergency 120/208-V or 120/240-V distribution panels of each of Divisions I, II, and III feed emergency lighting loads, emergency heating and ventilation loads, and emergency instrumentation and control loads. The 120/208-V or 120/240-V distribution system of any other division is physically isolated from and electrically independent of the 120/208-V or 120/240-V distribution system of any other division. The emergency instrumentation and control circuits may, in certain instances, feed nonsafety-related instrumentation and control equipment or circuits. In all such cases, appropriate isolation devices have been provided so that any failure in the nonsafety-related circuit will not impede the performance of the safety-related system.

Uninterruptible Power Supply System

The plant UPS system provides 120/208-V ac 3-phase normal and 120-V ac 1-phase normal and 120-V ac 1-phase emergency power supply to all plant service loads and instrumentation and control loads for which UPS is required. Each UPS system has a normal ac source and a bypass ac source from the plant 600-V distribution system, and a backup dc source from the plant 125-V dc distribution system except for 2VBB-UPS1H, which utilizes an integral 125-V dc storage battery as its backup source. The UPS is normally fed from its normal ac source. In case of loss of normal ac source, the UPS is automatically fed from the backup dc source. In case of any fault in the inverter, the UPS loads are fed from the bypass or an alternate ac source. The UPS system is shown schematically on Figure 8.3-5. The UPS output voltage is maintained within ±2 percent of 120/208-V for all of the UPSs except 2VBB-UPS1C and 2VBB-UPS1D. For 2VBB-UPS1C and 2VBB-UPS1D, the output voltage is maintained within ±3%. The output frequency is maintained within ±0.5 Hz of 60 Hz. The output voltage harmonic content will not exceed 5 percent of the fundamental. The transfer of the load from normal ac source to the alternate ac source in case of inverter trouble is automatic and is accomplished by a make-before-break static transfer switch so that no interruption of supply to UPS loads occurs due to such transfers. Each UPS system has a maintenance bypass circuit that enables servicing of either the static transfer switch or the rectifier inverter without affecting the UPS output.

The plant normal UPS system is shown on Figure 8.3-3. This consists of one 5-kVA, 120-V, 1-phase unit (2VBB-UPS1H), two 10-kVA, 120-V, 1-phase units (2VBB-UPS3A and 2VBB-UPS3B), and five 75-kVA, 120/208-V, 3-phase UPS units (2VBB-UPS1A, 2VBB-UPS1B, 2VBB-UPS1C, 2VBB-UPS1D, and 2VBB-UPS1G) and their associated distribution panel(s). The branch circuits are protected by fused disconnect switches and/or molded-case circuit breakers.

One 5-kVA UPS 2VBB-UPS1H feeds a gaseous effluent radiation monitor in the main stack; one 75-kVA UPS (2VBB-UPS1A) feeds the radwaste computer hardware and other selected nonsafety-related

instrumentation and control loads; the other 75-kVA UPS (2VBB-UPS1B) feeds local nonsafety-related radiation monitoring microprocessors, selected communication system loads, selected lighting loads, and selected nonsafety-related instrumentation and control loads; UPSs 2VBB-UPS1C and 2VBB-UPS1D feed selected lighting loads and communication system loads, and UPS 2VBB-UPS1G feeds the remaining plant computer loads. Two 10-kVA UPSs (2VBB-UPS3A and 2VBB-UPS3B) feed all RPS logic trip channel loads and main steam line isolation valves (MSIV) control solenoids through their associated distribution panels 2VBS*PNLA100 and 2VBS*PNLB100, and associated subpanels. The RPS and the MSIV are fail-safe systems (de-energize to operate), i.e., failure of the power supply causes a reactor scram and isolation and, therefore, UPS feeding these systems are classified as nonsafety related.

The power supply to the redundant trip systems is through their respective Class 1E electrical power assemblies that act as isolation devices between safety-related RPS devices and nonsafety-related power sources. Refer to Section 8.3.1.1.3 for details.

The plant emergency UPS system consists of two 25-kVA, 120-V, 1-phase UPS units (2VBA*UPS2A and 2VBA*UPS2B) and their associated distribution panels (Figure 8.3-4). UPS 2VBA*UPS2A is normally fed from Division I 600-V power distribution panel 2EJS*PNL100A; Division I 600-V emergency lighting panel 2LAC*PNL100A provides its alternate ac source, and Division I 125-V dc switchgear bus 2BYS*SWG002A provides its backup dc source. UPS 2VBA*UPS2B is normally fed from the Division II 600-V emergency power distribution panel 2EJS*PNL300B; Division II 600-V emergency lighting panel 2LAC*PNL300B provides its alternate ac source, and Division II 125-V dc switchgear bus 2BYS*SWG002B provides its backup dc source.

The plant emergency UPS system feeds emergency core cooling system (ECCS) instrumentation/control loads. It does not feed any emergency diesel generator control panel.

The emergency UPSs are located in the emergency switchgear room in the control building at el 261 ft. The control building is a Category I structure.

Standby Ac Power System

The plant onsite ac power system has a standby ac power system to provide power supply for operation of the plant emergency systems and ESFs during and following the emergency shutdown of the reactor in the event of a LOCA and LOOP or any other DBA and LOOP. The standby ac power system consists of three standby diesel generators, one dedicated to each of the three independent divisions of the plant emergency distribution system (Figure 8.3-2). Standby diesel generator 2EGS*EG1 is connected to Division I 4.16-kV emergency bus 2ENS*SWG101 and feeds Division I emergency loads. Standby diesel generator 2EGS*EG3 is connected

to Division II 4.16-kV emergency bus 2ENS*SWG103 and feeds all Division II emergency loads. Similarly, diesel generator 2EGS*EG2 is connected to Division III 4.16-kV emergency bus 2ENS*SWG102 and feeds all Division III (HPCS) loads.

Under normal plant operating conditions the diesel generators are maintained in a standby status. The engine is kept warm by circulating warm jacket water and warm lube oil to increase its first-try starting reliability. In the event of a LOOP or degraded offsite voltage condition, the diesel generators automatically start, accelerate to rated speed, voltage, and frequency, within 10 sec from the starting signal, and start picking up loads sequentially.

In case of a LOCA, the diesel generators automatically start, accelerate to rated speed, voltage, and frequency, and run on no-load. Should subsequent LOOP occur, the diesel generator will then energize the bus. Each standby diesel generator is capable of being started or stopped manually from the diesel generator control room, as well as from the main control room.

The Station standby power system is designed to meet the following functional design bases:

1. Each onsite emergency power distribution system has a dedicated standby diesel generator which is physically separated from and electrically independent of any other diesel generator so that failure in one diesel generator will not jeopardize the safety function of any other diesel generator.

2. Each standby diesel generator's continuous rating is determined based on its worst-case starting and continuous load duty under the following conditions:

   a. Simultaneous LOOP and LOCA.

   b. LOOP with subsequent LOCA.

   c. LOCA with subsequent LOOP.

   d. Simultaneous LOOP and unit trip.

   Tables 8.3-1, 8.3-2, 8.3-5 and 8.3-6 provide Division I and II diesel generator load tabulations and load summaries. Table 8.3-3 is a listing of Division III (HPCS) diesel generator loads.

3. Each standby diesel generator is capable of starting and accelerating to rated speed, in the required sequence, all the emergency shutdown loads and the ESF loads connected to it.

4. In case of unavailability of any one diesel generator, the remaining two diesel generators will be capable of feeding all the loads necessary for safe shutdown of the unit in the event of any DBA and LOOP.

5. Each standby diesel generator fuel oil system has a storage capacity suitable for operating each standby diesel generator for 7 days. The fuel oil storage is Category I.

6. Each standby diesel generator is capable of being manually paralleled with the plant offsite power sources. These are not used for supplying power to the grid.

7. Standby diesel generators are located in the diesel generator building which is a Category I structure. Each diesel generator is separated by Category I walls.

The capacity rating of the standby diesel generators for the three independent divisions of the plant emergency distribution system differs because of the difference in loads associated with the three divisions. Divisions I and II feed all plant emergency loads, except the HPCS loads, divided into redundant load groups. Division III feeds all HPCS system loads.

Standby Diesel Generators - Divisions I and II

The Division I and II standby diesel engines are 600-rpm, 16-cylinder, 4-stroke engines having the following ratings:

Continuous rating:	8,760 hr	4,400 kW
Short-term rating:	2,000 hr	4,750 kW
	2 hr	4,840 kW

The generators are synchronous type rated for 5,938 kVA, 4,160 V, 3-phase, 60 Hz, 600 rpm, 0.8 power factor, Class F insulation.

Each of the Division I and II diesel generators is required to start and carry the loads given in Tables 8.3-1, 8.3-2, 8.3-5 and 8.3-6, in the sequence stated therein. The generator total load is calculated under the following conditions:

1. Simultaneous LOOP and LOCA.

2. LOOP with a subsequent LOCA.

3. LOCA with subsequent LOOP.

4. Simultaneous LOOP and unit trip.

The most severe starting and accelerating duty occurs during Condition 2, the ultimate load after about 2 hr being about 4,306

kW. The continuous rating of the diesel generators thus exceeds the maximum required load.

Each diesel generator starts, accelerates to rated speed, voltage, and frequency, and starts load sequencing within 10 sec of the receipt of the starting signal. During the period of load sequencing, each diesel generator maintains its voltage and frequency within 80 and 95 percent of nominal, respectively. The voltage and frequency are restored to within 90 and 98 percent of nominal, respectively, within 40 percent of each load sequence time. The voltage is reestablished at nominal voltage prior to each subsequent load sequence. During recovery from transients caused by step load increases or resulting from a full load rejection, the speed of each diesel generator will not exceed nominal speed plus 75 percent of the difference between nominal speed and overspeed trip setpoint of 660 rpm.

Each diesel generator has the following auxiliary systems to ensure reliable and safe operation:

1. Fuel oil storage and transfer system.
2. Cooling water system.
3. Starting air system.
4. Lubrication system.
5. Combustion air intake and exhaust system.

These auxiliary systems are described in Sections 9.5.4 through 9.5.8. The auxiliary systems of each diesel generator are physically separated from and electrically independent of the auxiliary systems of any other diesel generator so that any failure in one diesel generator system will not jeopardize the safety function of any other diesel generator.

Automatic Starting and Loading Systems The Division I and II standby diesel generators start automatically in case of a LOOP, a LOCA, or both. The sequence of events following any of these conditions is as follows:

1. Loss of Offsite Power The LOOP condition appears in case of a complete loss of voltage or degraded voltage on emergency buses 2ENS*SWG101 or 2ENS*SWG103. Under any of these conditions, the bus undervoltage relays pick up and the following sequence of events takes place:

   0-10 sec Offsite power supply breaker 101-13 or 103-4 trips. All loads on the emergency buses 2ENS*SWG101 or 2ENS*SWG103 are tripped, except the loads fed through the 600-V load centers. Diesel generators start and

accelerate to rated speed, voltage, and frequency.

10 sec — Diesel generator supply breaker 101-1 or 103-14 closes. Load sequencing begins according to Tables 8.3-1, 8.3-2, 8.3-5, 8.3-6 if a LOCA condition appears.

2. Loss-of-Coolant Accident In case of a LOCA signal, the following sequence of events takes place:

0-10 sec — Diesel generators start on LOCA signal, accelerate to rated speed, voltage, and frequency.

10 sec — Diesel generators run on no-load at rated voltage and frequency, awaiting closing of the diesel generator breaker 101-1 or 103-14 in case any LOOP condition arises.

The Class 1E LOCA loads are sequenced on offsite power in the same way as these are sequenced on the standby diesel generators. Unit 2 uses sequential relaying for load sequencing; it does not use a preprogrammed, electronic or solid-state load sequencer. Load sequential relaying means the staggering of time in starting emergency pumps so as to prevent tripping of diesel generator. These time sequences will allow diesel generator voltage to return. Separate Agastat timers are provided for each sequence load at the switchgear feeding the load. Timers are connected in such a way that failure of one timer will not affect the timing operation of other timers (refer to ESK-5ENS21 and -5ENS22).

3. Random Sequence of Loss-of-Coolant Accident and Loss of Offsite Power A LOCA and LOOP can occur in any of the following random sequences:

a. Simultaneous LOCA and LOOP.

b. LOCA and subsequent LOOP.

c. LOOP and subsequent LOCA.

Under simultaneous LOCA and LOOP, the sequence of events is similar to that under LOOP (Condition 1); under LOCA and subsequent LOOP, the sequence of events is similar to those under LOCA (Condition 2) followed by tripping of the offsite power supply breakers and shedding of selected loads on emergency buses and then sequencing loads. The first group of loads is sequenced after the residual voltage on the largest motor in this group has decayed to approximately 25

percent of its rated voltage, which takes 1 sec. The sequence of events occurring in case of LOOP and subsequent LOCA is similar to those under LOOP (Condition 1).

Tables 8.3-1 and 8.3-2 give details of sequencing loads on the standby diesel generators under the conditions of simultaneous LOCA and LOOP, LOOP with delayed LOCA, LOCA with delayed LOOP, and LOOP with unit trip.

In these tables, the time, T, is measured from the instant the diesel generator attains its rated speed, voltage, and frequency, and is connected to the bus by closing the diesel generator breaker.

T=0 indicates that these loads are not shed from their buses and are energized as soon as the diesel generator breaker is closed.

T=1, 6, etc., indicates the time of the equipment start after the closing of the diesel generator breaker (T=0).

Sequencing of the service water pumps under the first three conditions described above is as follows. (Sequencing for Division I is explained. Division II is similar and is indicated in parentheses.)

At T=32 sec, service water pump 2SWP*P1A (2SWP*P1B) receives an autostart signal if it was previously in service. The other two Division I (Division II) service water pumps are blocked from manual starting until T=70 sec.

At T=37 sec, service water pump 2SWP*P1C (2SWP*P1D) receives an autostart signal if it was previously in service and none of the other Division I (Division II) service water pumps are running. Pumps 2SWP*P1E and 2SWP*P1A (2SWP*P1F and 2SWP*P1B) are blocked from manual starting until T=70 sec.

At T=42 sec, service water pump 2SWP*P1E (2SWP*P1F) receives an autostart signal if it was previously in service and if none of the other Division I (Division II) service water pumps are running. Pumps 2SWP*P1A and 2SWP*P1C (2SWP*P1B and 2SWP*P1D) are blocked from manual starting until T=70 sec.

For condition IV (LOOP with unit trip, nonaccident loading), the sequencing of the service water pumps is similar (T=32, 37, and 42 sec). There are no residual heat removal (RHR) or low-pressure core spray (LPCS) pumps sequenced to start prior to service water under this condition.

Tables 8.3-5 and 8.3-6 give total starting and running loads under different load blocks totaled from Tables 8.3-1 and 8.3-2, respectively.

Assumptions used in these calculations are as follows:

a. For 600-V motor loads, a conservative value of 1 kVA per hp has been assumed when the efficiency or power factor is not known.

b. For 4-kV motors, brake hp of driven equipment requirements are used to calculate motor kVA.

c. MOVs are assumed to be energized intermittently and all Class 1E MOVs are assumed to operate for the initial 2-min post-accident period. MOVs are assumed to have a starting kVA of 10 times the nameplate hp rating. When the actual starting current/torque is not known, this is conservative. If actual MOV constant load operating torques are not known, load torque is assumed to be 200 percent of nameplate hp rating. The higher opening or closing torque usually required at the beginning or end of the valve operation is assumed to occur over the initial 2-min diesel generator loading sequence and does not appear as a significant additional load to the diesel generator. Ten percent of the MOV running loads are assumed after the initial 2 min of diesel generator loading sequence. These assumptions are very conservative.

d. Transformer magnetizing in-rush current is assumed to be 12 times full load nameplate current with a 0.1-sec duration. Transformer losses for units smaller than 75 kVA are assumed as negligible.

   Transformers smaller than 75 kVA are assumed to be loaded to nameplate kVA rating unless the actual load is known.

e. For 600-V loads other than MOVs, a locked rotor current of six times the full load current and a starting power factor of 0.35 are assumed when the actual starting current and starting power factors are not known. These assumptions are conservative.

f. Small power/lighting transformers, battery chargers, heaters, and other direct nonmotor loads are assumed loaded to nameplate values unless the actual load is known.

Automatic Transfer of the Standby Diesel Generators from the Test Mode to the Emergency Mode in Case of a LOCA or LOOP Periodic testing of the Division I and II standby diesel generators does not impair its capability to supply emergency power within required times. During the test mode, the standby diesel generator is either loaded by paralleling this with the offsite power system or is running unloaded. If the diesel generator is running unloaded on test (not connected to the emergency bus), it will go on emergency mode if a LOCA occurs. If a LOCA occurs when the diesel generator is running in parallel with the offsite power during test, the diesel generator breaker will trip and the diesel generator will be running idle on emergency mode. The LOCA loads will be sequenced on offsite power. If a LOOP occurs when the diesel generator is running in parallel with the offsite power during test, the diesel generator will attempt to supply power to the offsite test loads through the closed offsite breaker. If the current exceeds a preset value, a set of three directional overcurrent relays will trip the offsite breaker; the diesel generator will continue to power the emergency bus.

The control power for automatic starting and load sequencing is provided from the emergency 125-V dc system belonging to the respective divisions. The nonsafety-related stub buses 2NNS-SWG014 and 2NNS-SWG015 are only connected manually, in case of a LOOP and in absence of any LOCA within the diesel generator capability. Upon a LOCA signal, these buses are automatically tripped off the emergency buses.

Control and Protection System Each standby diesel generator has a protection system designed to initiate diesel generator trouble alarms and shutdown sequence to prevent damage or destruction of the engine or generator should a malfunction occur during emergency or test mode operation. The control and protection logics are shown on Figure 8.3-6. The protective functions are outlined below. All conditions which shut down the diesel generator during test but are bypassed during emergency operation are alarmed in the main control room. Table 8.3-6a is a list of control room annunciator windows for the diesel generators. This table includes a window description, originating device number, and description of the originating device. This table reflects the separation of disabling and nondisabling alarms to annunciator windows. A disabling condition will not annunciate the same window a nondisabling condition annunciates. The generator phase overcurrent trip is bypassed under emergency conditions. Except for sensors and other equipment that must be directly mounted on the engine or associated piping, the control and monitoring instrumentation is installed on a freestanding, floor-mounted panel located in a separate room from the engine skids, and located on a vibration-free floor area.

1. Each standby diesel generator is rendered incapable of responding to an emergency autostart signal by the following conditions. These conditions are annunciated

in the diesel generator control room and in the main control room:

a. Low fuel oil level in day tank.

b. Low starting air pressure.

c. Dc control power failure at engine panel.

d. Mode selector switch in OFF position.

e. Dc control power failure at generator panel.

f. Generator differential protection operated.

g. Engine overspeed trip.

2. During emergency operation, the standby diesel generator is shut down and the diesel generator breaker tripped under the following conditions:

a. Engine overspeed.

b. Generator differential.

c. Manual stop (main or diesel generator control room).

d. Voltage-controlled overcurrent.

This is actually a bus protection and not a diesel generator protection. The relay trips the diesel generator breaker; it does not stop the diesel generator. Therefore, no coincident logic is necessary.

3. Each standby diesel generator is provided with the following safety shutdowns under test run condition:

a. Engine overspeed.

b. Generator differential.

c. Manual stop.

d. Generator directional ground overcurrent.

e. Generator reverse power.

f. Generator loss of field.

g. Jacket water outlet temperature high.

h. Lube oil temperature high.

i. Lube oil pressure low.

j. Turbocharger lube oil pressure low.

k. Bearing temperature high.

l. Turbocharger thrust bearing failure.

m. High vibration.

4. The following emergency conditions are annunciated locally in the diesel generator control room under all operating conditions:

a. Generator differential (with shutdown).

b. Reverse power and field loss (with shutdown).

c. Generator field ground fault.

d. Generator overvoltage.

e. Generator panel - dc control power failure.

f. Voltage-controlled overcurrent.

g. Directional ground overcurrent (with shutdown).

h. Blown potential transformer fuse.

i. Mode selector switch in OFF position.

j. Incomplete sequence (starting).

k. Overspeed engine (with shutdown).

l. Excessive vibration engine (with shutdown).

m. Generator control in maintenance position or inoperable.

n. Generator space heater auxiliary switches or MCC not proper for auto operation.

o. Jacket water pressure low.

5. Indicating instruments which are provided for monitoring the status of system pressure, temperature, level, etc., locally in the diesel generator control room and/or main control room are discussed in Sections 9.5.4 through 9.5.8. In addition, the following indicators are provided for monitoring the status of the generators:

a. Voltmeters.

b. Ammeters.

c. Wattmeters.

d. Varmeters.

e. Field ammeter.

f. Synchroscope.

g. Frequency meters.

h. Engine speed indicator.

i. Watt-hour meter.

j. Generator field voltmeter.

Qualification Testing The Division I and II standby diesel generators are qualified by tests and analysis in accordance with RG 1.9, IEEE-387-1977 and IEEE-323-1974 (see Section 3.11). Sufficient information on testing to qualify the Unit 2 diesel generators was submitted under separate cover in January 1984.

Standby Diesel Generator - Division III (HPCS) The Division III standby diesel generator is a unit supplied by General Electric Company (GE) as part of the NSSS system consisting of a 2-cycle, 20-cylinder, 900-rpm diesel engine having the following ratings:

Continuous rating:	8,760 hr	3,600 bhp	2,600 kW
Short-term ratings:	2,000 hr	3,950 bhp	2,850 kW
	200 hr	4,100 bhp	2,950 kW
	2 hr	4,000 bhp	2,860 kW
	30 min	4,225 bhp	3,050 kW

The continuous rating is subject to 10 percent overload for 2 hr out of 24-hr operation. The 2000-hr, 200-hr and 30-min ratings are not subject to overload.

The associated generator is a synchronous generator with the following ratings:

Output	2,850 kW
Voltage	4,160 V
rpm	900
Power factor	0.8 lag
Frequency	60 Hz

Phase	3 ph

The HPCS division does not use load sequencing. The Division III standby diesel generator is required to start and carry the HPCS pump 2CSH*P1 (3,050 hp), which constitutes about 90 percent of the HPCS diesel generator load in the event of a LOCA and LOOP. There are other 600-V auxiliary loads that are fed through MCC 2EHS*MCC201 via auxiliary transformer 2EJS*X2. The total loads to be connected to the HPCS diesel generator are shown in Table 8.3-3. The continuous rating of the diesel generator exceeds the maximum required load.

The HPCS diesel generator is capable of starting and accelerating the HPCS pump to rated speed, voltage, and frequency and energizing other connected 600-V loads within 27 sec of the receipt of the starting signal. The HPCS diesel generator cannot maintain the voltage and frequency within 75 and 90 percent, respectively, during initial loading. This does not, however, reduce the reliability of the HPCS system, since 90 percent of the HPCS system load consists of the HPCS pump which is being started; all other loads are fed via the 600-V MCC and auxiliary transformer. Consequently, momentary drops of voltage below 75 percent and frequency below 95 percent would not have any significant effect on HPCS system operation. During recovery from transients during starting its motor load or resulting from a full load rejection, the speed of the HPCS diesel generator will not exceed nominal speed plus 75 percent of the difference between nominal speed and the overspeed trip setpoint which is set in the range of 1,035-1,050 rpm.

The HPCS diesel generator has the following auxiliary systems to ensure reliable and safe operation:

1. Fuel oil storage and transfer system.
2. Jacket water system.
3. Starting air system.
4. Lubrication system.
5. Combustion air intake and exhaust system.

These systems are described in Sections 9.5.4 through 9.5.8. The auxiliary systems of the HPCS diesel generator are physically separated from and electrically independent of the auxiliary systems of any other standby diesel generator, so that any failure in one standby diesel generator system will not jeopardize the safety function of any other standby diesel generator. A heavy-duty turbocharger drive gear assembly has been installed in the HPCS diesel generator.

Automatic Starting and Loading The HPCS diesel generator starts automatically in case of a LOCA and LOOP supply. The sequence of events following such a condition is as follows:

0-3 sec	Offsite power supply breaker 102-4 and 102-5 trips; HPCS diesel generator starts.
10 sec	HPCS diesel generator supply breaker 102-1 closes; HPCS pump starts; 600-V loads energized.
27 sec	HPCS pump at rated speed; HPCS injection valves fully open.

The control power for automatic starting and loading is provided from the Division III emergency 125-V dc system.

Periodic testing of the HPCS diesel generator is performed from the control room by manual initiation or simulation of LOCA. This testing does not impair the capability of starting the HPCS pump within the required time. The test controls are overridden by the LOCA event.

The local engine control switch is usually in the automatic position to allow operation and periodic testing from the control room. The local engine control switch also provides a maintenance and test position. The maintenance position places the HPCS diesel generator in "out of service." The test position is used only for test after maintenance prior to transferring to automatic operation. The LOCA signal will not start the engine when the engine control switch is in the test position; however, the switch is spring loaded in the test position, returning automatically to the automatic position when released. As such, it is not necessary to provide any annunciation in the main control room for this test switch.

The diesel generator performs its emergency function automatically when it is operating in the test mode. During the test mode, the diesel generator is either loaded by paralleling with the offsite power system or is running unloaded. The emergency start demand signal that reverts the diesel to emergency mode from test during auto mode from the control room is a LOOP signal or a LOCA signal.

If a LOOP occurs, a parallel-loaded diesel generator would attempt to supply power to the offsite test loads through the closed feed breakers. A set of three directional overcurrent relays will trip the offsite feed breakers when the overcurrent exceeds the preset value on the relays. The diesel generator would continue to power the HPCS bus. The diesel generator would keep running with the voltage regulator in the automatic mode and the governor would remain in the droop mode until manually restored to the isochronous mode.

If a LOCA signal is received during HPCS diesel generator periodic testing and the diesel generator is running in parallel with the offsite power, the diesel generator feed breakers will trip. The LOCA signal would override the test start signal during auto mode and the diesel generator would continue running unloaded. The HPCS pump motor automatically would start from the HPCS bus.

Except in the case of a LOCA, diesel generator protective trips are operational. A LOCA signal causes all engine protective trips except engine overspeed and generator differential protection to be bypassed.

If the diesel generator is running unloaded, a LOOP signal would automatically trip the feed breaker and connect the diesel generator to the HPCS bus.

Control and Protection System The logics for control and protection of the Division III standby power system are shown on Figure 7.3-3. Except for sensors and other equipment that must be directly mounted on the engine or associated piping, the control and monitoring instrumentation is installed on a freestanding floor-mounted panel located in a separate room from the engine skid, and located on a vibration-free floor area. The Division III standby diesel generator has a control and protection system designed to initiate diesel generator trouble alarms and shutdown sequences to prevent damage or destruction of the engine or generator should a malfunction occur during emergency or test mode operation. The protective functions are as follows:

1. The HPCS diesel generator is rendered incapable of responding to an emergency autostart signal in case of a LOCA and LOOP due to the following conditions. These conditions are annunciated in the diesel generator control room and/or in the main control room:

   a. Low fuel oil level in day tank.

   b. Low starting air pressure.

   c. Control power failure.

   d. Engine in maintenance position (alarm in control room only).

   e. Diesel engine trouble/lockout not reset (alarm in main control room only).

   f. Generator trip/lockout not reset (alarm in main control room only).

2. The HPCS diesel generator is shut down and the generator breaker 102-1 tripped under the following conditions during LOCA operation:

   a. Engine overspeed.

   b. Generator differential.

   c. Manual stop (main or diesel generator control room).

   d. Voltage-controlled overcurrent.

      This is actually a bus protection and not a diesel generator protection. The relay trips the diesel generator breakers; it does not stop the diesel generator. Therefore, no coincident logic is necessary.

3. The HPCS diesel generator has the following safety shutdowns under test run condition:

   a. Engine overspeed.

   b. Generator differential lockout.

   c. Manual stop.

   d. Low lubrication oil pressure.

   e. High jacket water outlet temperature.

   f. Generator loss of excitation.

   g. Engine overcrank.

   h. Generator reverse power.

   i. Generator ground.

   j. Generator overcurrent.

4. The following emergency conditions of the HPCS diesel generator are annunciated locally in the diesel generator control room under all operating conditions:

   a. Generator fails to start/run.

   b. Left bank starter inlet pressure low.

   c. Loss of control power.

   d. Engine overspeed.

e. Engine tripped.

f. High generator stator temperature.

g. High jacket water temperature.

h. Low expansion tank water level.

i. Low cooling water pressure.

j. Low lubrication oil pressure.

k. Right bank starter inlet pressure low.

l. Low turbo lubrication oil pressure.

m. Crankcase pressure high.

n. High lubrication oil temperature.

o. Low lubrication oil temperature.

p. Restricted lubrication oil filter.

q. Fuel oil transfer pumps trouble.

r. Main fuel pump failure.

s. Reserve fuel pump failure.

t. Restricted fuel oil filter.

u. Dc turbo lube pump running.

v. Storage tank level off normal.

w. Day tank level off normal.

5. The following remote annunciation is provided in the main control room:

a. Engine in maintenance position.

b. 125-V dc system trouble.

c. Automatic start not ready.

d. Engine overspeed.

e. Engine running.

f. Engine trip.

g. Engine trouble.

h. Generator trip/lockout.

i. HPCS system ground.

j. HPCS system sustained undervoltage.

k. Diesel generator overcurrent.

l. HPCS control power failure or breaker in lower position.

m. HPCS battery breaker open.

n. Engine bypassed/inoperable.

o. Diesel generator loss of control power.

6. Indicating instruments which are provided for monitoring the status of the system pressure, temperature, and level, etc., in the diesel generator control room and/or main control room are detailed in Sections 9.5.4 through 9.5.8. In addition, the following indicators are provided for monitoring the status of the HPCS generator:

   a. Voltmeters.

   b. Ammeters.

   c. Wattmeters.

   d. Varmeters.

   e. Tachometers.

   f. Synchroscopes.

   g. Frequency meters.

All normal diesel generator trip conditions that are bypassed during emergency operation are alarmed in the control room. The following conditions shut down the Division III (HPCS) diesel generator during testing, but are bypassed during emergency (LOCA) operation:

1. Low lubrication oil pressure.

2. High jacket water outlet temperature.

3. Engine overcrank.

4. Generator loss of excitation.

5. Generator reverse power.

Conditions 1, 2, and 3 are individually alarmed at the local diesel generator control panel when any of the respective parameters have exceeded the preset limit. Concurrent with any one of these local alarms, a common control room alarm, Diesel Engine Trouble, is annunciated.

Conditions 4 and 5 are indirectly alarmed in the control room as HPCS System Sustained Undervoltage. Generator reverse power due to loss of diesel engine or due to loss of excitation will cause loss of bus voltage.

Table 8.3-3A provides a comparison of the HPCS diesel engine conditions described in Subparagraphs 1, 2, and 3, under Control and Protection Systems, and corresponding remote annunciations to the main control room that are listed in Subparagraph 5. The emergency conditions listed in Subparagraph 4 are annunciated in the diesel generator control room only.

Qualification Testing The Division III standby diesel generator is qualified by tests and analysis in accordance with RG 1.9 and IEEE-387-1972 (Section 3.11). GE Licensing Topical Report NEDO-10905 (Reference 4), Section 7.0, covers the HPCS diesel generator's compliance to these qualification guidelines.

Surveillance Testing The testing and loading of the diesel generators will follow the accepted good operating practices, and diesel runs will be made at or near 100-percent load. Provisions are made in operating procedures to prevent failures due to light load operation by following good operating practices as described by the diesel vendor including heavy loading of the diesel after any light load operation.

Periodic surveillance testing will be performed in accordance with Nuclear Regulatory Commission (NRC) guidelines as outlined in conformance to RG 1.108.

Preventive or corrective maintenance forms provide for the identification of cause of failure. A periodic review of maintenance of equipment is performed to determine failure trends. Increasing or unacceptable failure rates are utilized as one mechanism of determining requirements for additional testing or examinations to determine root cause of problems. Determination of root cause may require modification or redesign of components to improve reliability.

Prior to restoration of any equipment to service, all protective markups are removed and the components placed in the required operable condition. Procedure steps specifically require the restoration of jumpers, blocks, or lifted leads if required by the procedure. Following extensive maintenance activities, a complete system lineup will be performed. These activities are administratively controlled and required double verification for safety-related components. These methods, combined with a visual inspection by Operators prior to starting the diesel or support

equipment, provide the assurance that the diesel is ready for testing. Steps are included in surveillance tests of the diesel generator units to ensure that automatic standby service is restored and verified at the conclusion of the test.

Standby Diesel Generator Associated Training Nonlicensed Operators will receive in-depth training in the theory of operation of diesel generators, engine support systems, operation procedures (normal and emergency), and electrical distribution. This will be covered as part of the ongoing nonlicensed Operator training program which covers a 24-mo cycle.

License candidate training will also cover diesel generator operation and systems and components, along with simulator manipulation of controls for the diesel generators during startup, shutdown, abnormal and emergency operations, and surveillance testing.

License holders (Reactor Operator [RO] and Senior Reactor Operator [SRO]) will receive requalification lectures concerning diesel generators during their 24-mo requalification program. The content of the lectures will be as in-depth as those for the license candidate training program. The requalification program will also contain simulator manipulation of the diesel generator controls.

Maintenance personnel will be trained in the theory of operation, engine support systems, maintenance procedures, and electrical distribution of diesel generators. Maintenance procedures address routine maintenance. Major overhauls will be performed by or under the direct supervision of diesel vendor-trained personnel. Therefore, maintenance personnel training will be provided for routine maintenance. This training will be conducted by the Operations Training Group, and personnel will receive requalification lectures concerning the diesel generators.

As a minimum, the maintenance supervisors, his assistants, chief mechanic, and chief electrician shall attend this training.

Certain Quality Assurance (QA) personnel will attend a 6-hr training lecture given by the Operations Training Group that will contain the diesel generator lectures for the nonlicensed Operator training program. QA personnel performing surveillance and inspection tasks will receive this training and will be retrained on a 2-yr cycle.

Any new personnel hired in the preceding job classifications will receive diesel generator training for that position as specified previously.

Materials used to develop handouts and lessons plans were taken from plant drawings and vendor documents (technical manuals). This training, which will be done by the NMPC Training Department

Nuclear, will be equivalent to that of the diesel generator vendor and also meets the intent of NUREG CR-0660.

Training Department personnel who teach diesel generator courses shall be qualified instructors. A qualified instructor includes having comparable military or commercial large diesel work experience or training from a diesel vendor school.

8.3.1.1.3 Reactor Protection System Power Supply

The RPS power supply system provides power to the logic system that operates the RPS in accordance with the requirements of GDC 2, 21, and 23; IEEE-279-1971; and IEEE-379-1972. The RPS power supply consists of: 1) power supply to the RPS trip channels that monitor specific plant parameters that are critical for safe reactor operation and initiate a scram, and 2) power supply to the scram pilot valves solenoids that operate the scram inlet and outlet valves and cause a scram. The RPS power supply system is illustrated on Figure 8.3-7.

Power supply to the RPS trip channels consists of two UPS systems and the associated protective devices, distribution panels, and wiring. The RPS utilizes two separate trip systems identified as trip systems A and B. Each trip system is composed of two trip channels which produce the automatic trip signals. The two trip channels for trip system A are identified as trip channels A-1 and A-2. Similarly, the trip channels for trip system B are identified as trip channels B-1 and B-2. Each trip system receives power from one of the two 10-kVA, 120-V, 1-phase UPS systems. RPS trip system A is fed from UPS 2VBB-UPS3A. This is normally energized from 600-V ac nonsafety-related lighting panel 2LAT-PNL100. In case of loss of the normal supply, UPS 2VBB-UPS3A automatically receives power from its backup dc source provided by 125-V dc nonsafety-related battery 2BYS-BAT1C via 125-V dc nonsafety-related switchgear bus 2BYS-SWG001C. The battery is capable of feeding the UPS for 2 hr in case of loss of all ac sources. The associated battery charger 2BYS-CHGR1C1 is fed from stub bus load center 2NJS-US6. In case of any failure of the inverter, this UPS is fed from its alternate 600-V ac source from nonsafety-related distribution panel 2NJS-PNL500. RPS trip system B is fed from UPS 2VBB-UPS3B. This is normally energized from 600-V ac nonsafety-related power distribution panel 2NJS-PNL402. In case of loss of this normal supply, with inverter available, UPS 2VBB-UPS3B automatically receives power from its backup dc source provided by 125-V dc normal battery 2BYS-BAT1B via 125-V dc nonsafety bus 2BYS-SWG001B. The battery is capable of supplying the UPS for 2 hr after loss of all ac supply. The associated battery charger 2BYS-CHGR1B1 is fed from stub bus load center 2NJS-US6. In case of any failure of the inverter, this UPS is fed from alternate 600-V ac source from normal power distribution panel 2NJS-PNL600. The detail data for the UPS systems are as follows:

Rating	10 kVA, 120 V ac, 1 phase, 60 Hz
Input ac (normal and alternate)	
Voltage	575 ±10%
Frequency	60 Hz + 10%, - 5%
Phase	3
Input dc	125-V nominal varying between 103 and 140 V
Output voltage stability	124 V ±2% for all combinations of input voltages, output loading, and temperature
Output frequency stability	60 Hz ±0.5 Hz
Transient response	Any output voltage deviation, averaged over one-half cycle, will not exceed ±15% for a 100% load application or removal and will return to within ±2% for all combinations of dc input, ac input, and temperature.
Overload capacity	The UPSs are capable of supplying 125% full rated load for 10 min without failure while maintaining output voltage within ±10% of nominal.

Each UPS is connected to its associated distribution panel through two redundant electric protective assemblies (EPA) connected in series. The EPAs provide redundant protection to the RPS system and other associated essential circuits against overvoltage, undervoltage, and underfrequency conditions in the nonsafety-related power sources. The EPAs consist of overvoltage, undervoltage, and underfrequency trip components, housed in a Class 1E qualified 18"W x 37"H x 14"D protective enclosure. They operate and provide electrical protection under the following nominal input power conditions:

Power	18.7 kVA
Voltage	120-V ac ±2%
Phase	1 phase
Frequency	60 Hz - 1% slip
Current	156 A

The EPA overvoltage and undervoltage trip levels are adjustable over a range of 80 to 115 percent of the nominal input voltage of

120 V ac and 40 to 70 Hz frequency. The EPA underfrequency trip level is adjustable from 85 to 100 percent of the nominal input of 60 Hz. The EPAs disconnect the RPS power sources whenever the ac voltage exceeds the nominal 120 V by 10 percent or decreases below nominal by 10 percent. The EPAs also disconnect the power sources whenever the frequency decreases below 95 percent of the nominal 60.

Power supply to the solenoid-operated scram pilot valves consists of two high inertia motor generator (MG) sets and the associated protective devices, distribution panels, and wiring. The MG sets are designated 2RPM-MG1A and 2RPM-MG1B. One MG set feeds all of the A solenoid valves for the four groups of scram pilot valves through separate feeders. The other MG set feeds the B solenoid valves through separate feeders. Each MG set consists of an induction motor driving a synchronous generator and has a flywheel to supply sufficient stored energy to maintain the generator output voltage and frequency within specified limits during momentary interruptions of input power. The driving motor is fed from the plant 600-V nonsafety-related MCCs. MG set 2RPM-MG1A is fed from normal MCC 2NHS-MCC008, and MG set 2RPM-MG1B is fed from normal MCC 2NHS-MCC009. The detail data for the induction motor, the synchronous generator, and the flywheel assembly are as follows:

Induction Motor Data

25 hp, 1,785 rpm at full load
575 V, 3 phase, 60 Hz
33.2 amps at full load
NEMA Design A
Class B insulation
Drip-proof enclosure
110-V rated space heaters
Designed for continuous operation
Service factor 1.15

Synchronous Generator Data

18.75 kVA, 120 V, 1 phase, 60 Hz
1,800 rpm, 70°C temperature rise
156 amps full load current
Class B insulation
Drip-proof enclosure
Integral brushless exciter
110-V rated space heater

Flywheel Assembly

Calculated net weight 880 lb
Calculated WK^2 700 lb/ft^2

The steady-state output voltage regulation of the synchronous generator is 2 percent from no load to full load with normal

input to the drive motor. With a 50-percent step load change, the voltage variation is limited to ±15 percent momentarily. Recovery to steady-state regulation for both voltage and frequency does not exceed 1 sec. During a 2-sec power interruption, output voltage and frequency remain within 5 percent of the normal operating values. During a power interruption exceeding 2 sec, voltage is maintained within ±5 percent until output frequency has dropped by 15 percent.

MG set 2RPM-MG1A is connected to auxiliary bus 2RPM-PNL1A. An alternate power supply from the plant normal 600-V power distribution system is also connected to this auxiliary bus via a 15-kVA, 600-120/240-V, 1-phase step-down transformer. The alternate source energizes the auxiliary bus when the MG set is taken out of service for maintenance. The auxiliary bus is connected to the MG set main distribution panel 2RPM*PNLA100 through two redundant EPAs connected in series. These EPAs are similar to those used with the UPS systems feeding RPS trip systems and consist of molded-case circuit breakers and overvoltage, undervoltage, and underfrequency devices. MG set 2RPM-MG1B and its auxiliary source are connected to auxiliary bus 2RPM-PNL1B and main distribution bus 2RPM*PNLB100 in the same manner. From each of the main distribution panels, four separate circuits are drawn to four groups of scram solenoids.

There are two dc backup scram valves, A and B, which are fed from the plant emergency 125-V dc power system. Backup scram valve A is fed from Division I emergency dc bus 2BYS*SWG002A(G) via emergency dc panel 2BYS*PNL201A(G). Backup scram valve B is fed from Division II emergency dc bus 2BYS*SWG002B(Y) via emergency dc panel 2BYS*PNL201B.

The UPS systems and MG sets used to supply power to the RPS are classified nonsafety related because the RPS is designed as fail-safe, i.e., the system operates in a safe mode (trips and causes a scram) in case of loss of electric power. The EPAs and the distribution systems downstream from the EPAs' panel boards, associated protective devices, and wiring are classified as safety related and are designed and qualified as Class 1E and Category I to ensure reliability of the tripping function. The EPAs protect the Class 1E RPS and other associated Class 1E systems and components powered by the nonsafety-related RPS power supply sources against the effects of possible sustained abnormal voltage or frequency conditions from the non-Class 1E RPS power sources. Any random undetectable or seismically-induced abnormal voltage or frequency conditions in the outputs of the MG sets or their associated alternate power supplies, or the UPS systems, would trip either one or both of the two EPAs, thereby producing a half scram on that channel and retaining full scram capability on the other channel.

The power distribution systems associated with separate channels of the RPS are segregated into separate divisions. These are color coded and are installed with adequate physical separation

between them so that no single failure in the RPS power supply system will jeopardize the safety function of the RPS. The methods of identification and physical separation of the power distribution system associated with different RPS channels are described in Sections 8.3.1.3 and 8.3.1.4.

8.3.1.1.4 Cables and Raceways

Insulated copper conductors are used for all onsite power distribution systems. The insulations used are thermosetting rubber-based elastomer or cross-linked polyethylene, which are heat, moisture, impact, ozone, and nuclear radiation-resistant and are suitable for a nuclear power plant environment. The material of the cable jacket is flame-resistant protective thermosetting, heavy-duty, black chlorosulfonated polyethylene (or hypalon) which is also moisture, heat, weather, oil, ozone, and nuclear radiation resistant and, as such, suitable for nuclear power plant application.

The cables are installed in cable trays, conduits, and duct lines, etc., and derated in accordance with applicable IPCEA publications. The cables and raceways for the emergency onsite power distribution system are routed to meet the physical separation requirements of RG 1.75 and IEEE-384-1974.

All safety-related cables are qualified for their appropriate environmental conditions (Section 3.11).

Description of Cables

The types of cables used in the onsite power distribution system are as follows:

1. Medium Voltage Power Cable - 15 kV Thermosetting rubber-based elastomer insulated stranded copper conductors with ground wire, rated at 15 kV, are used for the 13.8-kV distribution system. The conductor jacket is flame-resistant, protective thermosetting, heavy-duty, black chlorosulfonated polyethylene. The ground wire is jacketed only. The cable is either single conductor or triplexed. All 15-kV cables are shielded, each conductor having a shield between the insulation and jacket.

2. Medium Voltage Power Cable - 5 kV Thermosetting rubber-based elastomer insulated stranded copper conductors with ground wire, rated at 5 kV, are used for the 4.16-kV onsite distribution system. The conductor jacket is flame-resistant, protective thermosetting, heavy-duty, black chlorosulfonated polyethylene. The ground wire is jacketed only. The 5-kV cables are triplexed and nonshielded, or single conductor and nonshielded.

3. Low Voltage Power Cable - 600 V The 600-V power cables used in the 600-V onsite distribution system have thermosetting rubber-based elastomer insulation, and flame-resistant, protective thermosetting, heavy-duty, black chlorosulfonated polyethylene jacket. The 600-V cables are either single conductor quadruplexed or four conductor, stranded copper, nonshielded.

4. Control Cable - 1,000 V The 1,000-V grade control cables are used for 125-V dc control circuits associated with the 13.8-kV and 4.16-kV switchgear buses, 600-V load centers, switchyard, long runs of other 125-V dc control wiring, and current transformer connections. The cables are multiple conductor, stranded copper, having insulating and jacket material similar to that of the power cables. The minimum size of cable used in this grade is No. 12 AWG.

5. Control Cable - 600 V The 600-V grade control cables are used for wiring 120-V ac motor control circuits, miscellaneous 125-V dc (electronics) circuits, electrohydraulic control (EHC) circuits, and indicating and annunciator circuits. These are single or multiple conductor, stranded copper cables with cross-linked polyethylene insulation and hypalon jacket. The minimum size cable is No. 12 AWG for 120-V ac motor control circuits and 125-V dc (electronic) circuits. The minimum size cable for the EHC circuits and the 125-V dc annunciator circuits is No. 16 AWG.

6. Instrument Cable - 300 V The 300-V grade instrument cables are used for the wiring of analog input and output, instrument transmitters, and resistance temperature detectors. These are single or multiple, pair, triple or quadruple, twisted, stranded copper conductors with cross-linked polyethylene insulation and hypalon jacket. These conductors are pair-shielded, triple-shielded, quadruple-shielded, or overall-shielded.

7. Thermocouple Extension Cable Thermocouple extension cables are twisted-pair construction, solid copper-constantan, iron-constantan, or chromel-alumel cables with a 90°C flame-resistant thermosetting-type insulation and a chlorosulfonated polyethylene jacket. These cables are either pair-shielded or overall-shielded.

8. Communication System Cables The communication cables are used for the wiring of the plant page party/public address (PP/PA) communication system, and maintenance and calibration communication (M/CC) system. These are 600-V single- or multiple-pair, twisted, stranded

copper cables with cross-linked polyethylene insulation and hypalon jacket.

In addition, some serial bus connections utilize a two-conductor #20 AWG shielded twin-axial data communications cable, with a nominal 100 ohm impedance, 150-V Teflon insulation with Teflon jacket and rated for operation in a 200°C ambient temperature.

9. Special Cable A number of special types of cables are provided to interconnect equipment, such as the NMS, the rod position information system (RPIS), the rod drive control system, and the area and process radiation system. These cables are of the coaxial or twinax type, except for the RPIS cable.

   The coaxial cables consist of tin-coated copper or copper-clad steel conductors and tin-coated copper shields, radiation cross-linked modified polyolefin and polymer LE insulations, and radiation cross-linked, flame-retardant, noncorrosive modified polyolefin jackets. The RPIS cable consists of 11 tin-coated copper conductors and one pair of chromel-alumel, thermocouple conductors. The insulation and jacket material is cross-linked polyethylene.

10. PGCC Cable The cables used in PGCC are 600-V single- or multiple-shielded twisted pair, stranded copper cables insulated and jacketed with tefzel insulation. These are rated for continuous use at 115°C and conform to IPCEA S-61-402[1].

Cable Ampacities and Derating

Cable ampacities and derating factors are based on IPCEA Publications No. P-46-426 and P-54-440[2,3]. The criteria are as follows:

1. All cable ampacities are based on the following ambient conditions:

   a. 65.5°C (150°F) for all cables in the primary containment.

   b. 51.7°C (125°F) for all cables in the standby diesel generator buildings.

   c. 54.4°C (130°F) for all cables in the main steam tunnels.

   d. 40°C (105°F) for all cables other than a, b, and c, and secondary containment including auxiliary bays.

2. Cable ampacities given in NEC or IPCEA Publications are based on 40°C ambient[2,3]. To derate for other ambients, Equation 5-a (Page III) of Reference 2 is used:

THIS PAGE INTENTIONALLY BLANK

$$I' = I\sqrt{\frac{T_C - T_{a'}}{T_C - T_a}}\ amps$$

(8.3-1)

Where:

T_c = Conductor temperature, °C

T_a = Ambient temperature, °C

I = Cable ampacity at T_a

T_a' = New ambient temperature, °C

I' = Cable ampacity at T_a'

This gives a derating factor of 0.9 for 50°C ambient and 0.7 for a 65.5°C ambient over the 40°C ambient ampacity. When one cable passes through areas with different ambients, the highest ambient is used for derating.

3. Derating for cable tray fill is in accordance with IPCEA Table VII[2]. Since it does not provide any derating factor for quadruplexed cable, the derating factors for triplexed cable are used for this, which give conservative cable fill. Ampacities for continuous duty cables in "open top 4-in deep" trays are based on 50-percent tray fill and a calculated depth of cables in cable tray of 2.5 in[3].

4. For cables in duct lines, IPCEA tables are further derated by ampacity multipliers to yield more conservative results.

5. For cables in conduit, tables in IPCEA[2] are used. For cables in conduit, other than triplexed cables, IPCEA[2] ampacities are used and derated by 0.82.

   For single-conduit runs, no further derating is necessary; for groups of conduit, multipliers in accordance with Table IX of IPCEA are used[2].

   Ampacities for triplexed cable run in conduit are taken from IPCEA (tables for isolated conduit in air)[2].

6. Cables that are run in a combination of duct, wall sleeves, conduit, and tray, are analyzed for the ampacity limiting factor. If that part of the raceway that is the limiting factor for ampacity is more than

10 ft long, then this governs the cable rating for the entire run.

7. Selection of a cable for any particular load is decided on the basis of three parameters.

   a. Ampacity.

   b. Permissible voltage drop.

   c. Short-circuit capability.

8. Cables for feeding safety-related motors are sized at 180 percent of the motor full load current. Cables for nonsafety-related motors are sized at 125 percent of the full load current to take into account overloads and service factor loading. For ac or dc fire pump motors, the cables are sized to carry 100-percent locked rotor current in accordance with NFPA-20-1976, Paragraph 7-4.2.7, and NEC 1978, Article 230-90, Exception No. 5.

9. Cables for safety-related and nonsafety-related MOVs are sized at 55 percent of the manufacturer's special locked rotor current, and not exceeding 300 percent of the full load current, except for dc safety-related MOVs, where cables are sized at 100 percent locked rotor current.

Raceways

The raceways used to route the cables throughout the plant are generally as follows.

Cable Trays Solid-bottom or ladder-type galvanized steel trays with solid sides are generally used. Trays for power cables have 3- or 4-in inside depth, and trays for control and instrumentation cables have 4-in inside depth. In general, control and instrumentation cable trays are 30 in wide. The width of power cable trays varies according to the cable requirement from 12 to 30 in. The cable trays generally conform to the requirements of NEMA Standards Publication No. VE1, Cable Tray Systems.

Standard trays, splice devices, and fittings are hot-dipped galvanized after fabrication, in accordance with ASTM A386. Steel covers are fabricated of sheet steel pregalvanized in accordance with ASTM A525. Special adjustable fittings are coated with zinc-rich paint.

Nuts, bolts, and washers for steel trays are steel. Coatings, where required, are either hot-dipped galvanized in accordance with ASTM A153, or cadmium electroplated in accordance with ASTM

A165 to a minimum 0.2 mil thickness, followed by a dichromate finish.

Cable trays are installed in continuous runs, varying in lengths, in continuous beam or beam overhang configurations. Straight run seismic supports are spaced not more than 8 ft apart (10 ft, nonseismic), and fittings are supported. With this support system design, cable trays and fittings are capable of sustaining an allowable dynamic vertical working load of 165 lb/linear ft. However, the total weight of cable and attachment in trays located in seismic areas is limited to 50 lb/linear ft to provide an additional safety factor. The cable trays and fittings are designed to meet the requirements for the plant safe shutdown earthquake (SSE) and operating basis earthquake (OBE).

Metal Conduit Metal conduits used are zinc-coated rigid steel or electrical metallic tubing. All metal conduit, electrical metallic tubing and fittings bear the label of Underwriters Laboratories Inc. (UL). Steel conduit having zinc coating applied by electrogalvanizing, sherardizing, or metal spraying process has an additional outer acid-resisting coating. All steel conduit supporting members and hardware are protected against corrosion by galvanizing or by suitable corrosion-resisting paint. Where metal conduit is used for short direct burial runs without concrete encasement, it is rigid steel and the buried portion is coated with asphalt after assembly to protect against corrosion.

Nonmetallic Conduit Nonmetallic conduits are polyvinylchloride (PVC), high-density polyethylene, or reinforced fiberglass. All nonmetallic conduits meet the requirements of NEMA Publications TC6 - Underground Ducts; TC2 - Electrical Plastic Tubing (EPT) Conduit (EPC 40 and EPC 80) and Fittings; TC3 - Polyvinylchloride Fittings for Use with Rigid Polyvinylchloride Conduit and Tubing; TC4 - Polyethylene Fittings for Use With Rigid Polyethylene Conduit; and TC9 - Fittings for ABS and PVC Plastic Utility Duct for Underground Installation. Joints in concealed or direct-buried PVC conduit are threaded or of slip-on, solvent welded type.

Cable Tray Fill

The criteria for cable tray loading are given in Table 8.3-7.

8.3.1.1.5 Containment Electrical Penetrations

Modular-type electrical penetrations are used to carry electrical power, instrumentation, and control cables inside the containment. These are designed in accordance with RG 1.63, IEEE-317-1976, and ASME Boiler and Pressure Vessel Code, Section III, Subsection NE Class MC for metal containment components to maintain mechanical and electrical integrity under normal and DBA conditions of the plant. All electrical penetration assemblies are designed to withstand the maximum possible fault current for

the time sufficient for operation of the backup protective devices in case the primary protective devices fail to operate. Appropriate actions and surveillance requirements are described in Technical Requirements Manual (TRM) Section 3.8.2.2. The ac circuits inside primary containment that are not provided with primary and backup containment penetration conductor overcurrent protective devices are listed in Table 8.3-16. Technical Specifications and TRM Section 3.8.2.1 require that these circuits be de-energized in Operational Conditions 1, 2, and 3.

Two typical penetration assemblies are shown on Figure 8.3-8. Each penetration assembly consists of a stainless steel header plate that is bolted to the containment penetration nozzle flange and sealed with silicone O-ring aperture seals. The header plate holds the conductor modules which are sealed within the header plate using stainless steel compression fittings, and are sealed at the terminal bushings of the medium voltage penetrations with stainless steel compression fittings. Each conductor module is a stainless steel tube carrying an insulated single conductor or conductor group. The conductor modules are sealed at each end with resilient high-temperature thermoplastic sealants. The conductors inside the modules are continuous from inside containment termination to outside containment termination. There are no internal splices of cables. Inside the containment, the modules terminate on a support plate. All penetrations have continuous pressure-monitoring and leak-detection devices.

There are five different types of penetrations based on their service, as follows:

Type 1

Each Type 1 penetration assembly contains five conductor modules, three with 15-kV insulated cables, one jacketed ground conductor, and one shielding cable. This is used to feed the 13.8-kV reactor recirculation pumps. Type 1 penetrations have hermetically-sealed bushings on the outboard header plate and inboard support plate, and compression-type terminal lugs for field cable connections. Each of the Type 1 penetration assemblies has a dual-element copper-constantan thermocouple to monitor the temperature within the assembly at the hottest spot.

Type 2

Each Type 2 penetration assembly contains multiple conductor modules with 600-V insulated solid copper conductors and a jacketed ground conductor. This is used to feed 600-V power loads inside the containment. In certain cases where 120-V control loads are fed through Type 2 penetrations along with 600-V power feeds, they use separate feedthroughs. Pigtail terminations are provided for connecting field cables at inboard and outboard ends. Heat shrink tubing is used on all pigtail terminations. Inboard and outboard terminations are enclosed in terminal enclosures for all low-voltage penetrations. For

shielded conductors, the shield is carried through the penetration as a separate conductor.

THIS PAGE INTENTIONALLY BLANK

Type 3

Type 3 penetrations are similar to Type 2 penetrations, except that Type 3 does not have any ground conductor. Type 3 penetrations are used to feed 120-V power, instrumentation, and control loads inside the containment.

Type 4

Each Type 4 penetration assembly contains multiple conductor modules with 300-V insulated solid copper conductors, except for thermocouple cables. Penetration cables for thermocouples match the external thermocouple leads. In Type 4 penetrations, each module may contain multiple, twisted conductors. Pigtail terminations are used for terminating field cables. The terminations are enclosed in terminal enclosures at both ends. Type 4 penetrations are used for feeding 120-V instrument loads, thermocouples, resistance temperature detectors, etc.

Type 5

Type 5 penetrations contain shielded signal cables and are used to connect nuclear in-core instrumentation cables inside and outside the primary containment. Type 5 penetrations also use pigtail terminations and terminal enclosures.

All power and control feeders passing through electrical penetrations are provided with primary and backup protective devices which are capable of limiting the maximum heat produced by the fault current (I^2t) at the penetration to a value less than the thermal capability of the penetration.

For all instrumentation circuits, the penetrations can carry continuously the maximum short-circuit current available without exceeding their thermal limit. The primary and backup protective devices for safety-related circuits going through the penetrations are Class 1E. The primary and backup protective devices for the nonsafety-related circuits going through the penetrations are non-Class 1E; these are similar to the Class 1E protective devices and are of high quality. The MCCs and distribution panels housing the protective devices for the nonsafety-related circuits going through the penetrations are seismically mounted.

The two 13.8-kV feeders to the reactor recirculation pumps have two redundant circuit breakers in series in the 13.8-kV safety-related switchgear. The 13.8-kV circuit breakers are electrically operated. Their operating time has been assured as 30 cycles for the purpose of calculation. This is very conservative. The actual time is expected to be around 10 cycles. The two breakers receive trip signals from the two separate divisions of the RPS system (see Section 8.3.1.1.3). Figure 8.3-8B Sheet 13 gives the short-circuit decrement curve for the reactor recirculation pump LFMG set for a three-phase

asymmetrical short circuit under full load condition. This curve shows that the available short-circuit current from the LFMG set is insufficient to cause loss of the penetration mechanical integrity. Therefore, two overcurrent protective devices are not required in the LFMG feeder circuits to the penetration.

Each 600-V feeder from the MCCs has a backup thermal-magnetic circuit breaker in series with the primary thermal-magnetic breaker. The backup circuit breaker trip setting is the same as the primary circuit breaker. The 600-V circuit breakers are molded-case type with 1-cycle operating time. The calculated worst case I^2t for the different types of penetrations and corresponding penetration I^2t capability are given in the following table. This shows that the thermal capability of the electrical penetrations is not exceeded. Figure 8.3-8A gives a typical simplified one-line diagram indicating the location of the penetrations, the primary and backup breakers, and the data used for calculating the fault currents in the penetrations. For the purpose of calculating worst case I^2t, the fault is assumed to occur at the load side terminals of the penetrations. The feeders used for calculation are the shortest feeders for each cable size.

Cable Voltage Rating	Cable Size AWG/KCM	Penet. Thermal Capability (I^2t)	Calculated Worst Case I^2t (t for 600 V=.0166 Sec t for 13.8 kV=0.5 Sec)
600V	#10	9.42×10^5	4.61×10^5
600V	#8	2.30×10^6	9.00×10^5
600V	#6	5.72×10^6	1.53×10^6
600V	#4	1.47×10^7	2.24×10^6
600V	#2	2.83×10^7	1.09×10^6
13.8 kV	750 KCM	8.19×10^9	4.27×10^8

Figure 8.3-8B shows samples of penetration capability curves plotted with the primary and backup protection device characteristic curves. The figure also indicates the continuous current rating and maximum short-circuit current that may be available at the penetration of any particular size. The samples include all types and ratings of primary and backup protective devices and all sizes of the penetrations used.

Since the penetration capability curves and the primary and backup protection device characteristic curves are plotted with the maximum available short circuit current at any particular size of the penetration, the samples represent the worst-case conditions.

All electrical penetration assemblies are qualified for 40-yr service in the applicable environment in accordance with RG 1.63, IEEE-317-1976, and IEEE-323-1974.

The details of the qualification procedure, test results, and analysis are given in Section 3.11.

Refer to TRM Section 3.8.2.3 for specific requirements regarding emergency lighting system overcurrent protective devices.

8.3.1.1.6 Safety-Related Motors

All Class 1E motors are designed in accordance with NEMA Publications No. MG1. Motor sizes have been determined by the characteristic of the driven equipment so that the motor develops sufficient torque to start and accelerate the driven equipment to rated speed, under maximum expected flow and pressure, with the minimum specified motor terminal voltage. The minimum motor starting voltage is 75 percent of the motor-rated voltage for all Class 1E motors except the NSSS-supplied motors and MOVs, which have a minimum starting voltage of 80 percent of the motor-rated voltage. The actual available starting voltage under degraded voltage conditions for safety-related MOVs is calculated on a case-by-case basis and used in determining if the valve can develop sufficient torque to operate under design conditions. The Division I and II standby diesel generators have been designed to maintain at least 80 percent of nominal bus voltage during load sequencing. The acceleration time is less than the time to sequence each load group by the standby diesel generator. Class 1E motors have either Class B, F, or H insulation. Motors for inside containment service have Class H insulation. All Class 1E motors 1,500 hp and above have winding thermocouples embedded in the stator windings at locations uniformly distributed around the winding where the highest temperatures are expected. All vertical motors and horizontal motors with sleeve bearings have bearing thermocouples for monitoring the bearing temperature.

Class 1E motors are qualified as described in Section 3.11.

8.3.1.1.7 Criteria for Interrupting Capacity of Class 1E Switchgear, Load Centers, Motor Control Centers, and Distribution Panels

The interrupting capacity of the Class 1E switchgear, load centers, MCCs, and distribution panels are determined based on the maximum short-circuit current available at the respective buses. The available fault current is determined by short-circuit studies. All possible sources of fault current contribution have been considered. The interrupting ratings for 13.8-kV and 4.16-kV switchgear buses and 600-V load centers are then selected in accordance with ANSI Standards C37.06-1971 and C37.04-1969. The interrupting rating of the MCCs and the panel boards are selected in accordance with ANSI Standard C19.3-1973 and NEMA Publication PB-1, 1971. The interrupting ratings of the Class 1E switchgear buses, load centers, MCCs, and panel boards are given in Section 8.3.1.1.2.

8.3.1.1.8 Electric Circuit Protection

Motor feeders from 13.8-kV and 4.16-kV Class 1E switchgear buses are protected against short circuit by inverse time overcurrent relays with instantaneous elements in two phases. Each motor feeder also has an instantaneous ground overcurrent relay for ground fault protection. The Class 1E load center transformer feeders from Class 1E 4.16-kV switchgear are protected against short circuit and ground fault with time overcurrent relay with instantaneous elements in each of the three phases, and an instantaneous ground overcurrent relay. The time overcurrent relays on the bus incoming line provide protection against bus faults and backup protection to individual feeder circuits from the bus.

The Class 1E 600-V load center (Divisions I and II) buses are protected against bus faults by the incoming bus circuit breakers, which are the direct-acting, series trip type having short-time and long-time trips. The incoming breaker also provides backup protection for the load center feeder circuits. The feeders from load centers to the MCCs on the static loads are protected by circuit breakers with short-time and long-time trips. The motor feeders from the load centers are protected with circuit breakers with long-time and instantaneous trips.

The feeder circuits from the 600-V MCCs have overload and short-circuit protection. The motor circuits have combination starters containing thermal-magnetic breakers with inverse time and instantaneous trip elements and thermal overload relays for short-circuit and overload protection, respectively. Nonmotor circuits are provided with thermal-magnetic breakers with inverse time and instantaneous trip elements for overcurrent and short-circuit protection. No ITE-make, molded-case circuit breakers, type HE-3, manufactured before May 1974 are used.

Safety-related 120-V circuits from 120-V, 120-V/240-V distribution panels are protected by thermal-magnetic breakers or by fuses. The panels are directly connected to the secondary of the 600-V-120/240-V, 1-phase distribution transformers, the primary of which is protected by thermal-magnetic breakers. The instantaneous trip settings of these breakers are set high enough to trip only on faults on the panel bus, on the main feeder cable, or within the transformers, thus ensuring that faults in the branch circuits from the panels trip only the affected secondary breaker and not the transformer feeder breaker.

A list on non-Class 1E lighting fixtures which are powered from Class 1E emergency power systems is provided in Table 8.3-17. Technical Specifications provide operability requirements for these devices.

The 120-V circuits from 120-V Class 1E uninterruptible power distribution panels are protected by thermal-magnetic breakers or by fuses. The ac incoming feeders to each UPS are protected by

thermal-magnetic breakers. The 125-V dc incoming feeder is protected by an air circuit breaker. Each Class 1E UPS system is provided with necessary undervoltage and overcurrent protection to maintain its uninterruptible service.

No Westinghouse type BF and BFD relays or DB circuit breakers are used at Unit 2. Cutler-Hammer type M relays, with dc coils (Catalog No. D23MRD, manufactured before July 1976) are excluded in Unit 2 design. Also excluded are GE type STD relays and AK-2 circuit breakers.

All the protective devices are set to isolate the faulted circuit or equipment with minimum disruption of the system function. The criteria is to set the overcurrent trips at 125 percent of the full load current, and the alarms at 120 percent of the full load current (minimum). All protective device trip functions are coordinated, starting from the lowest downstream buses and moving upward for proper sequential tripping, thus providing backup protection with appropriate time delay.

The thermal overload on all safety-related ac MOVs is bypassed by any automatic safety signal or manually by the Operator holding the spring return control switch. Annunciation is provided in the control room for those overload control conditions. An example is shown on drawing nos. ESK-6CSL02 and ESK-6CSL03 in the drawing package.

There are no thermal overloads on dc safety-related MOVs with an active safety function. For dc safety-related MOVs with no active safety function, the thermal overload provides annunciation.

The relay trip setpoint drift problems are minimized by appropriate testing and preventive maintenance.

There are no cases within the Unit 2 design wherein power is disconnected from the control circuit of a valve (MOV, air-operated valve [AOV], solenoid-operated valve [SOV]) in order to satisfy a safety function. There are, however, designs within Unit 2 that require the opening of a contact within a control circuit to de-energize the coil of a SOV (AOV) to perform the valve's intended safety function. An example of this would be an AOV which must close to perform its safety function upon receipt of an initiation signal. This signal would de-energize the SOV which, in turn, would open, venting air from the AOV and causing it to close.

In all cases where the above discussion holds true, it has been verified by a FMEA that should this circuit fail due to a failure of any of the connections, a redundant valve system is available to ensure completion of the intended safety function. This ensures compliance to the single failure criteria.

Refer to Appendix 9B for valves which are de-energized from their power sources during normal plant operation to meet the requirements of Appendix R.

8.3.1.1.9 Grounding of Class 1E Systems

The 13.8-kV and 4.16-kV systems are low-resistance grounded. The 13.8-kV system is grounded through resistors connected to the neutral of the wye-connected secondary winding of the normal Station service transformer and the reserve Station service transformers. The Class 1E 4.16-kV system is grounded through grounding transformer and resistor combination connected to the tertiary winding of the reserve Station service transformers and the auxiliary boiler transformer. The 600-V and lower voltage distribution systems are solidly grounded at the auxiliary Station transformer neutrals. All major electrical equipment is directly connected to the ground grid by ground conductors. All components and hardware are grounded through the ground bus, which is in turn connected to the ground grid. The standby diesel generators are resistance grounded.

8.3.1.1.10 Periodic Testing and Maintenance

The equipment and systems associated with plant emergency onsite ac power system are designed to be testable during normal plant operation or during plant shutdown. The redundancy of the plant emergency onsite ac power system allows periodic testing and maintenance of equipment during normal plant operation. Periodic testing and maintenance are performed in accordance with the normal Station operating procedures to ascertain the status of the safety-related equipment operating during normal plant operation and to demonstrate capability of the equipment which is normally de-energized to perform its function when required. The periodic testing procedures will be in accordance with RG 1.118.

Testing of Offsite/Onsite Power System

Transfer of emergency 4.16-kV buses 2ENS*SWG101, 2ENS*SWG102, and 2ENS*SWG103 from offsite power sources to their respective standby diesel generators will be tested in accordance with the Technical Specifications.

Periodic Testing of Standby Diesel Generators

Preoperational and periodic testing of the standby diesel generators will be performed in accordance with provisions of RG 1.9, RG 1.108, and IEEE-387-1972. The standby diesel generators have a complete exercise mode for this purpose, including manual starting, manual synchronizing with the offsite power sources, and manual loading. The standby diesel generators are capable of operating in parallel with the offsite power sources.

Protective Systems and Actuating Devices

The protective systems associated with the plant onsite emergency ac power system are designed to permit periodic testing of the relays, actuating devices, and circuits during normal plant operation. Periodic testing of this equipment will be done in accordance with RG 1.22.

8.3.1.2 Analysis

The plant electric power systems have been designed, in accordance with the criteria provided in the general design criteria and the applicable regulatory guides, to ensure power supply to all systems and components required to mitigate the consequences of any DBA and/or safety shutdown of the reactor under all conditions of plant operation. The following analysis demonstrates the extent of compliance with the general design criteria, regulatory guides, and IEEE standards. All safety-related equipment is qualified to serve in its respective environment. (See Section 3.11.) Originally, the FMEA of the plant auxiliary power system was contained in the Unit 2 FMEA document, which is historical. FMEAs for plant systems are now performed and controlled by the design process.

For conformance to general design criteria and regulatory guides, see Sections 3.1 and 1.8.

For conformance to the Station Blackout Rule, 10CFR50.63, see Section 8.3.1.5.

8.3.1.3 Physical Identification of Safety-Related Equipment

Two methods of identification have been used to distinguish between Class 1E and non-Class 1E components and between the three independent divisions of the onsite power systems. These are color coding and alphanumeric coding. Color coding is applied to all safety-related equipment and systems for ready identification. The alphanumeric coding is applied, in addition to color coding, to all safety-related equipment including cables and raceways for specific identification.

8.3.1.3.1 Color Coding

The following color coding is applied to all safety-related components of the onsite power system. Nonsafety-related systems are not color coded and are generally black.

Division	Color Code
Division I LPCS, RHR-A, ADS-A, Service water A, C & E, EECW-A, safety related HVAC-A, safety related Onsite power system - Division I	Green
Division II RHR-B and C, ADS-B, Service water B, D and F, EECW-B, safety related HVAC-B, safety related Onsite power system - Division II	Yellow
Division III (HPCS system)	Purple

The following color coding is applied to the redundant channels of the RPS, NMS and primary containment and reactor vessel isolation control systems (PCRVICS).

System	Color
RPS	
Logic power supply	Noncolor
Input channel and logic	
RPS D1	Green
RPS D2	Yellow
RPS D3	Orange
RPS D4	Blue
RPS D1 Channel A1	Green/White
RPS D2 Channel B1	Yellow/White
RPS D3 Channel A2	Orange/White
RPS D4 Channel B2	Blue/White
Output and power supply	
Scram solenoid	
Group 1	Orange
Group 2	Yellow
Group 3	Green
Group 4	Blue
NMS	
Input channels	
Channel NA	Green
Channel NB	Yellow
Channel NC	Orange
Channel ND	Blue
Output channels	
Channel IA	Green
Channel IIA	Orange
Channel IB	Yellow

System	Color
Channel IIB	Blue
Power supply	Noncolor
PCRVICS	
Input channels	
MSLIV D1	Green
MSLIV D2	Yellow
MSLIV D3	Orange
MSLIV D4	Blue
MSLIV D1 Channel 2	Green/White
MSLIV D2 Channel 2	Yellow/White
Output and power supply	
MSLIV (Power)	Noncolor
MSLIV (Logic)	
Div. D1 Channel 1	Green
Div. D1 Channel 2	Green/White
Div. D2 Channel 1	Yellow
Div. D2 Channel 2	Yellow/White
MOV, SOV, Division I	Green
MOV, SOV, Division II	Yellow

Safety-related equipment has permanently affixed identification plates. Safety-related cables outside the control room are color coded through application of paint, colored tape, or colored wraparound split-sleeve markers. Cables in trays are color marked at each end, at intervals not exceeding 15 ft, at both sides of walls, and at partitions on floors separating areas prior to or during pulling of cables. All exposed safety-related raceways are color-marked at intervals not to exceed 15 ft and at both sides of walls and at partition or floor separating areas, prior to installation of cables. Flexible or rigid plastic color markers with pressure-sensitive adhesive backing are used for cable trays and conduits. All markers used are prequalified for the environmental conditions to which they may be exposed.

8.3.1.3.2 Alphanumeric Coding

Each piece of mechanical and electrical equipment that has an electrical cable routed to it, and all scheduled cable and raceway, is identified by an alphanumeric code number in addition to the color coding.

Equipment Alphanumeric Code

The alphanumeric code used to identify any piece of equipment has the following format:

2	ENS	*	SWG	101
1	2	3	4	5

Where:

1 = Unit number

2 = System code, e.g., ENS for 4.16-kV emergency system, EPS for 13.8-kV emergency system, etc.

3 = Divider which indicates whether the equipment is safety related or nonsafety related. Safety-related equipment is identified with asterisk (*) whereas the nonsafety-related equipment is identified with a dash (-).

4 = Equipment code indicating the type of the equipment, e.g., SWG for switchgear, US for unit substation, MCC for motor control center, etc.

5 = Equipment identifier, which identifies the particular equipment as part of the similar equipment in the system.

Cable Alphanumeric Code

The alphanumeric code used to identify any piece of cable has the following format:

2 EJS B Y L 600

1 2 3 4 5 6

Where:

1 = Unit number

2 = System code

3 = Part, a symbol which can be either an alpha or numeric character to designate, for example, a MCC cubicle section or one pump of a group (A,B,C, etc.).

4 = Color, an alpha symbol indicating whether the cable is safety related or nonsafety related.

5 = Service, an alpha character indicating the type of service for which the cable is utilized. The symbols used are as follows:

C Control
J 15-kV cables
H 4.16-kV cables
K 600-V derated power or less
L 600-V power or less
X Instrumentation

6 = Number, three characters assigned to specify each individual cable.

Raceway Alphanumeric Code

The alphanumeric code used to identify any raceway has the following format:

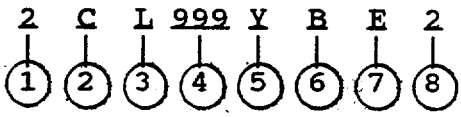

Where:

1 = Unit number

2 = Type of raceway. The following symbols are used:

A Armored cable or direct-burial cable

Direct-burial cables are given an alphanumeric raceway code to help engineering, design, and field installation personnel to completely identify the route the cables should follow to connect two points. There are, however, no directly buried Class 1E cables at Unit 2. Armored cables are used only to feed Class 1E bar rack heaters in the intake structure. These cables are routed in embedded conduit and duct banks.

C Conduit
D Duct and concealed conduit over 20 ft
F Floor sleeves and concealed conduit 20 ft or under
T Tray and troughs
U Trenches and blockouts
W Wall sleeves

3 = Service as explained under cable alphanumeric code.

4 = Number, three characters assigned to specify each individual raceway.

5 = Color code

6, 7,8 = When used for conduit, the eighth character (always an alpha character) identifies an individual conduit. The ninth character could be either an alpha character or a numeric character. As an alpha character the ninth character identifies an individual conduit; as a numeric character the ninth character identifies that conduit's branch. The last character (always a numeric character) identifies that conduit's branch.

For sleeve or duct, the eighth and ninth characters individually identify a sleeve or duct in a group.

The eighth through tenth characters are never used for tray identification numbers.

8.3.1.4 Independence of Redundant Systems

The plant Class 1E power systems are divided into three independent divisions. Any two out of the three divisions are capable of bringing the reactor to a safe shutdown in case of a DBA. The independence of the three divisions is ensured through electrical isolation and physical separation. The physical separation criteria are in compliance with the requirements of RG 1.75. The criteria are implemented through the Unit 2 electrical installation specification, physical layout drawings, and field QA procedures.

8.3.1.4.1 Electrical Isolation

The three divisions of the plant onsite power system are electrically independent of each other. This independence is maintained through the loads the divisions feed; each division feeds a separate load group and there is no chance of interconnecting independent divisions through the loads. Each division has its dedicated standby power source that is independent of the standby power source of any other division. There is no provision for paralleling the standby power sources of different divisions or for using the standby power source of one division to feed the loads of any other division. Each division uses its own control power sources for instrumentation and control, and the control power source of each division is independent of the control power of any other division. There is no provision for interconnecting these control power sources or for feeding the control circuits of one division from the control power sources of any other division.

Each division is also isolated from the associated nonsafety-related systems. Whenever a safety-related power or control circuit is connected with any nonsafety-related circuit, appropriate isolation devices as defined in RG 1.75 and IEEE-384 are used. In the case of control and instrument circuits, a combination of two interrupting devices actuated by fault current have been used to isolate non-Class 1E circuits from Class 1E circuits (see Section 1.8, RG 1.75 position for justification). Nonsafety power loads are not fed from safety buses except the stub bus loads (see Tables 8.3-1 and 8.3-2). The stub buses are tripped on LOCA signal.

Certain circuits become "associated" circuits by virtue of being connected to the Class 1E power system and are treated as Class 1E. They are identified and color coded as the Class 1E circuit with which they are associated and are isolated by appropriate

isolation devices. They are not routed with any division other than the one with which they are associated.

For UPS 2VBB-UPS1A, the normal ac supply (N) is taken from 2NJS-US3 or -US4; the backup dc supply (B) is taken from 125-V dc switchgear 2BYS-SWG001A. The battery charger connected to this dc switchgear is fed from stub bus 2NJS-US5. The alternate ac source (A) is also taken from 2NJS-US5. For UPS 2VBB-UPS1B, the normal ac supply (N) is taken from 2NJS-US3 or -US4; the backup dc supply (B) is taken from 125-V dc switchgear 2BYS-SWG001C. The battery charger connected to this dc switchgear is fed from stub bus 2NJS-US6.

The alternate ac source (A) also is taken from stub bus 2NJS-US6.

The UPSs are transferred to their backup dc sources (B) only in case of loss of the normal source (N). The UPSs are transferred to their alternate source (A) in case of loss of both normal and backup sources or a fault in the inverter. As such, there is no interconnection of 2NJS-US5 and -US6 through UPSs 2VBB-UPS1A and -UPS1B.

Dc power supply to 4.16-kV normal switchgear 2NNS-SWG016, -SWG017, and -SWG018; 600-V load centers 2NJS-US1 through -US10; and 13.8-kV switchgear 2NPS-SWG004 and -SWG005 is provided from both dc buses 2BYS-SWG001A and -SWG001B. One source serves as the normal source and the other as the standby source. Only one set of fuses is provided to connect either of the dc sources so that no interconnection of the two sources may occur.

For 4.16-kV switchgear 2NNS-SWG011 through -SWG015 and 13.8-kV switchgear 2NPS-SWG001 through -SWG003, one dc bus normally supplies control power to the main and tie breakers. The other dc bus supplies control power to the feeder breakers. In case of loss of one of the dc sources, the associated bus may be energized manually from the other source. There are only two sets of fuses to be used with four physically different fuse holders to avoid any interconnection of the two sources (see Figure 8.3-11).

Power supply to the fire protection panels is provided from both stub buses 2NJS-US5 and -US6. One serves as the normal source and the other serves as the standby; they are interlocked electrically to avoid interconnection of the two sources.

There are at least two overcurrent protection devices for each source to prevent failure of any of the load centers fed from the stub buses for any fault in the panel which may short or ground both sources.

8.3.1.4.2 Physical Separation

Physical Separation of the Class 1E Equipment

The items of equipment associated with each of the three independent divisions of the Class 1E onsite power systems are located in separate areas of seismic Category I structures to physically isolate them from each other. The Class 1E 4.16-kV switchgear buses of the three divisions are located in the Division I, II, and III emergency switchgear rooms in the control building at el 261 ft. The Class 1E 600-V load centers associated with Divisions I and II are located in the emergency switchgear room of the respective division. The Class 1E MCCs associated with Divisions I and II are located in the emergency switchgear rooms of the respective division, in separate rooms in the screenwell building (el 261 ft), and in the reactor auxiliary building auxiliary bays north and south (el 240 ft), respectively. The Division III MCC is located in the Division III emergency switchgear room.

The three standby diesel generators are located in the standby diesel generator building and are separated by Category I walls. Each room has an independent ventilation system. The Class 1E batteries are located in the respective divisional battery rooms in the emergency switchgear room. Each battery room has an independent ventilation system. The Class 1E UPS systems associated with Divisions I and II are located in the respective divisional emergency switchgear rooms. The physical separation of the major safety-related electrical equipment is shown on Figures 1.2-15 and 1.2-17.

Physical Separation of Cables and Raceways

The criteria followed for physical separation of the cables and raceways are as follows:

1. General Plant Areas

   a. Safety-related circuits associated with the different divisions are routed in separate cable trays, conduits, ducts, tunnels, penetrations, etc. These are never intermixed.

   b. Three-ft horizontal and/or 5-ft vertical separation is generally maintained between cable trays associated with redundant circuits or between safety-related and nonsafety-related circuits regardless of their voltage class except in cable spreading areas. In cable spreading areas, the minimum separation distance between redundant Class 1E cable trays and between safety-related and nonsafety-related circuits is 1-ft horizontal and/or 3-ft vertical.

c. Where 3-ft horizontal and/or 5-ft vertical, or 1-ft horizontal and/or 3-ft vertical separation is not practicable, enclosed steel tray or conduit is used or a barrier is installed. Where enclosed raceways are used, the minimum separation distance between the enclosed raceways of different colors, or between one color and nonsafety is 1 in. The minimum separation distance from 600-V or less nonsafety-related conduit to safety-related open cable trays and cable in free air for any service level is 1 in.

   Where a partition-type barrier is provided, the minimum separation distance between the barrier and the raceways is 1 in.

   The minimum separation between any Class 1E raceway and any lighting cord for drops to the lighting fixtures shall be 1 in.

   Aluminum sheath (ALS) cables used for low-energy 120-V ac system are considered enclosed raceways. These cables have flame-retardant cross-linked polyethylene insulation, chlorosulfonated polyethylene jacket, and polypropylene fillers enclosed in a continuous, impervious aluminum sheath which provides adequate protection. As such, the minimum separation between these cables and Class 1E raceways is 1 in.

d. Where vertical shafts are used between elevations, the same criteria for separation of redundant circuits and redundant and nonsafety-related circuits are followed.

e. Fire stops and seals are provided for cabling at walls, partitions, and floors separating areas.

f. Tray covers are provided on the first 6 ft of all vertical trays penetrating a floor where required for physical protection of the cable and on the top tray under grating in areas where water spray fire protection is not used.

g. Flexible conduit is not used as a barrier in non-NSSS systems. Flexible metallic conduit is used for connection of motors or fixed-equipment enclosures to rigid conduit systems to provide flexible connections for seismic considerations, or where installation of rigid conduit would be difficult due to numerous bends, etc. Where flexible conduit is used, the minimum separation distances maintained are as given in the following paragraph, which have been established by test.

h. Supplemental Physical Separation Criteria Where the minimum separation distances specified in Sections 1.a through 1.g cannot be maintained due to physical arrangements, the minimum separation distances specified below for cables and raceways, 600 V and below, shall be maintained (see RG 1.75 position in Table 1.8-1 for justification).

Cable tray to cable tray	10 in horizontal or 10 in vertical
Cable tray to conduit	1 in
Cable in free air to conduit	1/2 in
Cable in free air to cable in free air	10 in vertical or 10 in horizontal
Cable in free air to cable tray	10 in vertical or 10 in horizontal
Wrapped cable to unwrapped cable	0 in
Conduit to conduit	1/2 in

Where the minimum separation distances specified above cannot be maintained, enclosed raceways will be used or a separation barrier will be installed.

2. Hazardous Areas

a. Fire Hazard Areas Routing of divisional cables through any area where there is a potential for accumulation of large quantities of oil or other combustible material is avoided. Where such routing is unavoidable, cables belonging to only one division are allowed in any such area, and the cables are protected by conduits or tray covers or solid tray bottoms designed to prevent the combustible materials from reaching the cables. Separation requirements in such areas are in accordance with RG 1.120.

b. Mechanical and Flood Damage Areas In areas where large rotating equipment is operated or in areas containing high-pressure piping, divisional cables are separated by physical barriers or by additional distance over that specified in Criterion 1, so that a missile or flood cannot damage more than one division. In areas containing an operating crane, divisional cables are separated by a physical barrier or by adequate

distance so that the largest dropped load cannot damage more than one division.

3. Panels, Relay and Instrument Racks, and Control Boards

a. Instrumentation and control circuits associated with different divisions are terminated in separate panels, relay and instrument racks, control boards, or in panels having vertical separation barriers. In case it becomes necessary to terminate different divisional circuits in one control panel section, separate terminal boards with terminations separated by at least 6 in are used for terminating the different divisional circuits. Nonsafety-related circuits, terminated in a safety-related panel, are also separated in the same way as two different divisional circuits in the same panel. If a 6-in separation cannot be maintained, a fire-resistant barrier is provided between the terminals or an analysis is made to establish that a fire in one divisional circuit inside the panel will not disable both divisions.

Flexible conduit is used in NSSS panels as a barrier to achieve required separation. It is primarily used in areas where the minimum spatial separation distance of 6 in is not maintained due to circuit configuration. Further discussion is provided in Appendix 8A.

The scram solenoid and MSIV circuits are run in separate conduits. Cables from other circuits are not run in these conduits. Within the PGCC the conduit is flexible and is routed within nondivisional PGCC ducts. There is no mixing of divisions. Interconnection wiring between RPS subpanels is run in conduits to maintain separation from other wiring.

When redundant control switches are located in the same panel, Class 1E wiring of redundant divisions is separated by a 6-in minimum air space. In cases where this spacing is impractical, a barrier as defined by IEEE-384 (such as conduits and/or device enclosures) is used. The adequacy of lesser separations is shown by analysis based on the results of past tests concerning the flame-retardant characteristics of the insulating materials used for common devices and isolators.

Wiring for information outputs from Class 1E or associated signal sources, such as those to annunciators or data loggers, are treated as Class 1E associated and retain divisional classification

up to and including the isolation device input. The isolation device output is classified as nondivisional.

Internal wiring within panels, racks, and control boards is color coded for divisional separation except vendor-supplied panels.

Non-Class 1E instrumentation and control circuits not classified as Class 1E associated are treated as nondivisional and are separated from all divisional and associated divisional wiring.

Isolation devices are used at all interfaces between Class 1E divisions and between divisional and nondivisional circuits such as where displays, alarms, and computer circuits connect to Class 1E circuits.

b. Supplemental Physical Separation Criteria Where the minimum physical separation distance specified in Item 3.a cannot be maintained due to physical arrangements, the minimum separation distance between control/instrument cables of one color and noncolor inside control/instrument cabinets shall be 1 in (see RG 1.75 position in Table 1.8-1 and in Appendix 7B). Where the minimum separation distance of 1 in cannot be maintained, a separation barrier will be used.

4. Electrical Penetrations

a. Each penetration assembly carries only one divisional cable; no cables feeding non-Class 1E loads are run in penetrations carrying cables serving Class 1E loads.

b. Each penetration carries cables of one voltage class only, i.e., low-voltage instrument, control and power (below 1,000 V) cables, medium-voltage (13.8-kV) power cables, etc.

c. Division I cables are routed through penetrations on the two north quadrants of the primary containment at el 240 ft; Division II cables are routed through penetrations on the two south quadrants of the primary containment at el 240 ft. Division III cables are routed through one penetration on the 180- to 270-deg quadrant of the primary containment at el 261 ft. This results in a physical separation of more than 3-ft horizontal/5-ft vertical between circuits of different safety-related divisions. Non-Class 1E circuit penetrations are separated from Class 1E

circuit penetrations by 3-ft horizontal/5-ft vertical or more.

d. RPIS penetrations are divided into four groups and each group is located in one quadrant of the primary containment.

e. Penetrations carrying the four redundant NMS and RPS cables are located in four different quadrants of the reactor building.

f. NMS and RPS cables are run in separate penetrations. RPS or NMS penetrations are not shared with any other safety-related or nonsafety-related cables.

g. With the exception of the low-signal RPIS penetrations, located on el 240 ft, all penetrations carrying cables of non-Class 1E loads are located on el 261 ft and the suppression pool area below the el 240 ft of the reactor building.

5. Control Building Unit 2 does not have a conventional cable spreading room as it uses the PGCC design for the control room and the relay room. Generally, the safety-related cables belonging to different safety-related divisions are routed into the control room through two vertical cable chases. The Division I cable chase is located on the west side, and the Division II cable chase is located on the east side. Division III cables are routed in the east vertical chase, but these are run in conduit to meet the separation requirements. Fire stops are provided at each flow in the vertical chase.

   There is no high-energy equipment or piping in the areas where the vertical cable chases are located. The only power cables routed in the vertical cable chase areas are the low-voltage power supply feeders for the control room panels. These power cables are routed in their own conduits.

6. Reactor Building To accomplish the separation requirements, the reactor building is subdivided into four quadrants: northeast, northwest, southeast, and southwest. A cable tray system is provided in each quadrant to provide access from each floor to the vertical risers and to the tunnels between the control building and the reactor building. The two north quadrants carry predominantly Division I cables; two south quadrants carry predominantly Division II cables. The electrical penetration assemblies carrying Division I and II cables inside the containment are located in the same quadrants. Division III cables are run in

trays or conduits maintaining physical separation requirements. Division III electrical penetration assemblies are located in the southwest quadrant at a different elevation from Division I and II penetrations as stated in Item 4 above.

7. Electrical Tunnels Four tunnels are provided to carry cables between the reactor building and control building. One tunnel runs from the northeast quadrant of the reactor building, along the north and west sides of the reactor building, and enters the north side of the control building. This tunnel carries Division I (green) cables and all green cables associated with the RPS, NMS, and PCRVICS. The second tunnel runs from the northwest quadrant of the reactor building along the west side of the reactor building directly under the Division I tunnel and enters the north side of the control building. This tunnel carries all blue cables associated with the RPS, NMS, and PCRVICS. The third tunnel runs from the southwest quadrant of the reactor building and enters the north side of the control building. This tunnel carries all orange cables associated with the RPS, NMS, and PCRVICS. The fourth tunnel runs from the southeast quadrant of the reactor building and enters the east side of the control building. This tunnel carries Division II (yellow) cables and all yellow cables associated with the RPS, NMS, and PCRVICS. The nonsafety (black) cables are run in the second and third tunnels. Black cables are appropriately separated from the Class 1E cables in these tunnels which are run in their own enclosed raceways.

8. Separation of RPS, NMS and PCRVICS Circuits All wiring for the RPS, NMS and PCRVICS is segregated into four separate divisions as detailed in Section 8.3.1.3.1. All cables associated with RPS, NMS and PCRVICS are routed in enclosed raceways except the undervessel neutron monitoring cables. Cables of different divisions are routed in separate enclosed raceways. Within the same division, all fail-safe wiring is again separated from nonfail-safe wiring by routing those in separate enclosed raceways. Separation between different divisions (different colors) of RPS, NMS and PCRVICS are the same as that between raceways of different safety systems. For MSIV solenoids and limit switches which receive power from two different channels, the channel separation is maintained up to the junction box adjacent to the solenoids/limit switches.

8.3.1.5 Conformance with 10CFR50.63, Station Blackout Rule

Station blackout (SBO) is defined in 10CFR50.2. The SBO Rule requires that each light-water-cooled nuclear power plant be able to withstand and recover from a SBO of a specified duration. RG 1.155 describes a method acceptable to the NRC staff for meeting the requirements of 10CFR50.63.

NUMARC 87-00, "Guidelines and Technical Bases for NUMARC Initiatives Addressing Station Blackout at Light Water Reactors," also provides guidance that is in large part identical to the RG 1.155 guidance and is acceptable to the NRC staff for meeting these requirements. Table 1 of RG 1.155 provides a cross-reference between the regulatory guide and NUMARC 87-00, and notes where the regulatory guide takes precedence.

Unit 2 is evaluated against the requirements of the SBO Rule using guidance from NUMARC 87-00, and the supplemental guidance provided by NUMARC 87-00, Supplemental Questions/Answers, December 27, 1989, and NUMARC 87-00, Major Assumptions, December 27, 1989, except where RG 1.155 takes precedence. The results of this evaluation submitted to the NRC are documented in References 5, 6, 8, 10 and 12 (Section 8.3.4) and are summarized below. NRC evaluations and acceptance of NMPC's response to the SBO Rule are documented in References 7, 9 and 11 (Section 8.3.4). The effects of power uprate conditions on SBO evaluations are documented in Reference 13.

8.3.1.5.1 Station Blackout Duration

A SBO duration of 4 hr is based on the following plant factors:

1. The ac power design characteristic group is "P2" based on:

    a. Expected frequency of grid-related LOOP events does not exceed once per 20 yr.

    b. Estimated frequency of LOOP due to extremely severe weather (ESW) places the plant in ESW Group 1.

    c. Estimated frequency of LOOP due to severe weather (SW) places the plant in SW Group 3.

    d. The offsite power configuration is in the I 1/2 Group.

    e. Plant-specific prehurricane shutdown requirements and procedures are not required for Unit 2, nor are such procedures credited in the determination of the ac power design characteristic group.

2. The emergency ac power configuration group is "C" based on:

   a. There are two emergency ac power supplies not credited as alternate ac power sources.

   b. One emergency ac power supply is necessary to operate safe shutdown equipment following a LOOP.

3. The target emergency diesel generator (EDG) reliability is 0.975. A target EDG reliability of 0.975 is selected based on having a nuclear unit average EDG reliability for the last 20 demands greater than 0.90. An analysis showing the EDG reliability statistics for the last 20, 50, and 100 demands to support this target reliability is also performed.

8.3.1.5.2 Station Blackout Coping Capability

The following plant systems are reviewed to assure that the systems have the availability, adequacy, and capability to achieve and maintain a safe plant shutdown and to recover from a SBO for the 4-hr coping duration.

1. Condensate Inventory for Decay Heat Removal

   The minimum condensate storage tank (CST) level of 135,000 gal by the Technical Specification provides sufficient inventory to cool the core for the 4-hr coping duration. A water inventory of 125,000 gal of water required for decay heat removal for the 4-hr coping duration is calculated, including water usage due to plant depressurization and a leakage rate of 61 gpm (Reference 13). The CST inventory is verified daily, and CST low and low-low levels are alarmed in the control room.

2. Class 1E Battery Capacity

   A battery capacity calculation performed pursuant to NUMARC 87-00, Section 7.2.2, and IEEE-485-1978, verifies that the Class 1E batteries have sufficient capacity to meet SBO loads for 4 hr. Non-Class 1E batteries are also assessed. Nonessential loads must be shed from non-Class 1E batteries to cope with SBO duration of 4 hr. The shedding of the nonessential loads from batteries is identified in plant special operating procedures.

3. Compressed Air/Gas

   Compressed air-/gas-operated valves relied upon to cope with a SBO for a 4-hr period are the main steam safety relief valves (SRV). These SRVs can be manually

operated by the control room Operator using available relief or automatic depressurization system (ADS) mode of operation. The compressed gas available in the accumulator is determined to be adequate for the anticipated required SRVs opening function during the SBO coping duration. Therefore, no independent backup power source is required.

4. Effects of Loss of Ventilation

Based on the equipment used to respond to the SBO event, the key areas in which the loss of ventilation cooling causes a concern for equipment operability are identified as:

a. Control Room

b. Switchgear Room

c. Drywell

d. RCIC Room

Heatup calculations are performed for the above four areas.

The control room temperature calculation is based upon: 1) opening of the door between the control room and control building, 2) opening all control room panel access doors, 3) opening all relay room doors, and 4) opening all relay room panel access doors, to increase cooling by natural convection. Completion of these actions within 30 min of the onset of a SBO event maintains control room temperature below the maximum limit of 120°F during a SBO event as endorsed by NUMARC 87-00.

The drywell and the RCIC room are the key dominant areas of concern (DAC). The operability of SBO response equipment in the DAC is assessed using Appendix F to NUMARC 87-00 and no hardware modifications are needed for equipment operability in the DAC.

5. Containment Isolation

The containment isolation valves (CIV) evaluation in the SBO study determines which valves are normally open or closed and fail as-is upon loss of ac power, and cannot be excluded by the criteria listed in RG 1.155. The resulting list of CIVs is further reduced by applying additional exclusion criteria which provide adequate isolation (i.e., water seals, dc closure capability, valves interlocked closed and valves in

series with an excludable valve). The remaining CIVs of SBO concern are:

a. 2DER*MOV120

b. 2DFR*MOV120

c. 2DFR*MOV139

d. 2WCS*MOV112

The above four valves of SBO concern must be closed if "Containment isolation is required and core damage is imminent." A plant special operating procedure lists the CIVs of SBO concern and ensures confirmation of valve closure by position indication (local, mechanical, remote, process information, etc.).

6. Reactor Coolant Inventory

The ability to maintain adequate reactor coolant inventory required for core cooling is evaluated for the SBO duration. An analysis performed for the required inventory makeup includes water usage due to plant depressurization, and assumes a maximum leak rate of 61 gpm for 4 hr (based on 18 gpm per recirculation pump (2 pumps) and the maximum allowable (25 gpm) Technical Specification leak rate) (Reference 13). Based on RCIC system operation and on the reactor pressure vessel (RPV) makeup needs determined by RPV pressure and level indication, the usage of CST water supply estimated and compared with the CST capacity. The minimum capacity based on the plant Technical Specification for Unit 2 is 135,000 gal which is available to the RCIC system. Therefore, the expected rates of inventory loss under SBO conditions are adequately made up by the RCIC system and no core uncovery occurs during the SBO period.

To ensure that appropriate reactor coolant makeup water is provided under SBO conditions, procedures specify operation of the RCIC system in the manual flow control mode to maintain RPV level. This prevents the RCIC system from tripping on high RPV level and improves reliability of operation by avoiding repeated starts.

8.3.1.5.3 Procedure and Training

Plant procedures, SBO response guidelines and ac power restoration procedures implement an appropriate response to a SBO event, and incorporate changes necessary to meet NUMARC 87-00 Section 4 guidelines.

Personnel training to ensure an effective response to a SBO event is incorporated into the training program.

8.3.1.5.4 Quality Assurance

The nondivisional batteries 2BYS-BAT1A, 2BYS-BAT1B and 2BYS-BAT1C are assigned a "Q" classification and are covered under the Quality Related Program for Nine Mile Point Nuclear Station Operations, which is consistent with the guidance of RG 1.155 Appendix A. The remaining SBO equipment is safety related and is covered by existing quality assurance requirements in 10CFR50 Appendix B.

8.3.1.5.5 EDG Reliability Program

The EDG Reliability Program developed for Unit 2 conforms to the guidance of RG 1.155 Position C.1.2. The program includes a 0.975 EDG target reliability based on EDG reliability data for the last 20, 50 and 100 demands.

8.3.2 Dc Power System

8.3.2.1 Description

8.3.2.1.1 General

The plant dc power system includes equipment and systems required to supply dc power to all protection and control systems and other dc loads, under normal and emergency conditions of plant operation. The dc power system consists of the batteries, battery chargers, dc switchgear, various distribution panels, dc cables, and dc loads. The dc power system is divided into two distinct categories. The components of the dc system and the loads that are required to safely shut down the reactor in case of a DBA are designated nuclear safety related or Class 1E; the others are nonsafety related or non-Class 1E.

The nuclear safety-related dc power system is designed to meet the requirements of the general design criteria and the applicable regulatory guides. The system has adequate capacity, independence, redundancy, and testability to ensure dc power supply to all safety-related protection, control, and other loads under all conditions of plant operation. The safety-related dc system is divided into three independent divisions corresponding to the three divisions of the onsite ac power system.

Each division has its own dedicated battery and battery chargers which are physically independent of and electrically isolated from the battery and the battery chargers of any other division. The independence of the three divisions of the dc system is maintained throughout the distribution system and the dc loads. The emergency batteries, battery chargers, dc switchgear, and panel boards are qualified for operating in their respective environmental conditions (temperature, pressure, humidity, and

radiation) for the qualified service life, in accordance with the applicable regulatory guides. All emergency dc system equipment are Category I and are located in Category I structures. The Class 1E battery room ventilation is described in Section 9.4. The plant dc power system is illustrated on Figures 8.3-10 and 8.3-11.

8.3.2.1.2 Safety-Related Dc Systems

Identification

The three divisions of the emergency dc power system are designated Divisions I, II, and III, corresponding to the three divisions of the onsite emergency ac power system with which they are associated. The three divisions are identified by the same color coding as the color coding of the emergency onsite ac power system, i.e.:

Division I	Green
Division II	Yellow
Division III	Purple

The equipment and loads associated with each division are identified with the color coding of that division. The method of identification is described in Section 8.3.1.3.

Safety-Related Dc System Loads

The emergency dc loads fed by the battery and battery chargers of the three independent divisions are listed below. Divisions I and II feed the redundant emergency dc loads associated with Divisions I and II, respectively, of the emergency onsite ac system while Division III feeds the emergency dc loads associated with Division III (HPCS system) of the emergency onsite ac power system.

1. Division I (Green)

   a. Protection and control for 4.16-kV switchgear 2ENS*SWG101.

   b. Protection and control for 600-V load center 2EJS*US1 via 125-V dc switchgear 2BYS*SWG002A.

   c. UPS 2VBA*UPS2A.

   d. Reactor core isolation cooling (RCIC) system loads via 125-V dc MCC 2DMS*MCCA1.

   e. Division I standby diesel generator control panels via 125-V dc panel 2BYS*PNL204A.

f. Division I standby diesel generator field flashing.

g. Division I miscellaneous 125-V dc loads via 125-V dc panel 2BYS*PNL201A.

2. Division II (Yellow)

a. Protection and control for 4.16-kV switchgear 2ENS*SWG103.

b. Protection and control for 600-V load center 2EJS*US3 via 125-V dc switchgear 2BYS*SWG002B.

c. UPS 2VBA*UPS2B.

d. Division II standby diesel generator control panels via 125-V dc panel 2BYS*PNL204B.

e. Division II standby diesel generator field flashing.

f. Division II miscellaneous 125-V dc loads through 125-V dc panel 2BYS*PNL201B.

3. Division III (Purple)

a. Protection and control for 4.16-kV switchgear 2ENS*SWG102.

b. Division III standby diesel generator control panels via 125-V dc panel 2CES*IPNL414.

c. HPCS system solenoid valves.

d. HPCS relay panel.

e. Indicator lamps control room panel (HPCS).

f. Division III standby diesel generator standby fuel pump.

g. Division III standby diesel generator field flashing.

h. Turbocharger lube oil pump.

i. Lube oil circulating pump.

j. Division III transient analysis recorder.

Safety-Related Dc System Design Criteria

The safety-related dc system is designed to the following criteria:

1. The emergency 125-V dc system consists of three physically separate and electrically independent dc power divisions corresponding to the three divisions of the onsite ac power system. Each division feeds a separate emergency dc load group through a separate distribution system.

2. Each division of the emergency dc system has its own battery, primary and backup battery chargers, dc switchgear and distribution panels, which are all Class 1E and Category I.

3. Division I and II emergency batteries are sized in accordance with RG 1.32, IEEE-308-1974, and IEEE-485-1978. Division III emergency battery is sized in accordance with RG 1.32 and IEEE-308-1974. Each battery is capable of performing its duty cycle (Tables 8.3-8 through 8.3-10) following the loss of chargers after the battery had been floated between 130 and 135 V dc, is fully charged at 65°F, and with capacity deteriorated to 80 percent. Adequate design margin is included in sizing the battery to support future load growth and less than optimum operating conditions. Should both battery chargers for any particular battery be out of service at any point in the dc load cycle, the battery is capable of starting and operating its associated loads for 2 hr according to a precalculated load profile without the battery terminal voltage falling below minimum acceptable level: 105 V dc for Division I and II and 112.5 V dc for Division III. For Division I and II dc loads, the operating voltage range is 101 V to 140 V. The actual available starting voltage under degraded voltage conditions for safety-related MOVs is calculated on a case-by-case basis and is used in determining if the valve can develop sufficient torque to operate under design conditions. All the loads with their magnitudes and durations are given in Tables 8.3-8 through 8.3-10. The normal operating voltage range of the Division III dc loads listed in Table 8.3-10 is 110 to 135 V. The Division III 125 V dc battery terminal voltage is normally maintained by a battery float voltage of 135 V. The Division III battery is floated at 2.25 V/cell, (135 V dc) to minimize the periodic equalization of the batteries. Whenever equalization is required, the vendor recommends equalizing at 2.28-2.29 V/cell (137.5 V dc). However, during equalization state (137.5 V dc) and lightly loaded conditions, the voltage drop in the circuit brings the voltage at the load terminals within

the operating range. The maximum equalizing voltage will not jeopardize dc loads under all conditions. The

THIS PAGE INTENTIONALLY BLANK

battery is designed to supply power for 2 hr. Following this 2-hr period, if the battery terminal voltage drops to 112.5 V, then the dc control devices not already energized may fail to energize. At this point, the Division III dc system is not operable, and the Division III diesel generator may not be capable of responding to LOCA demand. At this point, the Technical Specifications limitations will be used, depending on availability of Division I and II diesel generators. The Division III dc bus is backed by two redundant chargers powered from two separate power sources. Probability is remote that both of these sources will fail simultaneously. This ensures the design adequacy of the 125 V dc power source.

4. Each emergency dc bus has a primary and a backup battery charger. Each emergency battery charger is capable of supplying the largest combined demands of the steady-state loads on the battery while recharging the battery from the design minimum charge state to the fully charged state within 24 hr.

5. All components of the emergency 125-V dc system are designed as Class 1E and Category I. The components of the three divisions are located in separate rooms in a Category I structure.

6. The emergency battery rooms are provided with exhaust ducts which discharge to the atmosphere limiting the hydrogen accumulation to less than 2 percent by volume, and maintain the battery room temperature between 65° and 104°F. Each battery room has smoke detection equipment located in 3-hr rated fire areas.

7. The installation design for the emergency batteries provides adequate space for inspection, maintenance, replacement, and testing of the batteries.

8. The emergency dc system is ungrounded.

Safety-Related Dc System Description

Emergency Batteries Division I and II emergency batteries 2BYS*BAT2A and 2BYS*BAT2B are calcium grid type lead-acid batteries having an amp-hr rating of 2,550 on an 8-hr basis at 77°F. The average float voltage is 2.22 V/cell; the average equalizing voltage is 2.33 V/cell. One minute rating of Division I and II batteries is 2,350 amps at 1.75 V per cell.

Division III emergency battery 2BYS*BAT2C consists of calcium grid lead-acid cells having an amp-hr rating of 100 on an 8-hr basis. The average float voltage is 2.22 V/cell. The average equalizing voltage range is 2.28-2.29 V/cell. One minute rating of Division III battery is 148 amps at 1.75 V per cell.

The battery cell containers are made of translucent plastic material. The cells are sealed type with covers fixed in place with permanent leakproof joints. High and low electrolyte level markers are provided on all four sides of the plastic containers. Cell covers have flash vent arrestor and sample tube openings. All Class 1E batteries are mounted on two-step Category I steel racks with restraining members arranged to prevent motion of the cells relative to each other or to the rack. The battery racks are grounded. The emergency batteries 2BYS*BAT2A, 2BYS*BAT2B, and 2BYS*BAT2C are located in three separate battery rooms in the control building on el 261 ft. The emergency batteries are qualified for their service environment in accordance with IEEE-323-1974. They are seismically qualified in accordance with IEEE-344-1975. The qualification procedures, test results, and analysis are detailed in Sections 3.10 and 3.11. Demineralized water is available within the battery rooms for eye wash. The Division I and II batteries and the battery racks have been procured as one package and seismically qualified together so that there are no chances of any incompatibility between the battery and the battery rack which may cause cracking of the battery case. The Division III batteries and battery racks are also procured as one package and seismically qualified together so that there are no chances of any incompatibility between the battery and the battery rack which may cause cracking of the battery case.

Emergency Battery Chargers Each Class 1E battery has two 100-percent capacity battery chargers. The battery chargers associated with Division I emergency battery 2BYS*BAT2A are designated 2BYS*CHGR2A1 and 2BYS*CHGR2A2. The battery chargers associated with Division II battery 2BYS*BAT2B are designated 2BYS*CHGR2B1 and 2BYS*CHGR2B2, and those associated with Division III battery 2BYS*BAT2C are designated 2BYS*CHGR2C1 and 2BYS*CHGR2C2.

The Division I and II emergency battery chargers are constant potential type rated for 300 amp continuous capacity with 575-V, 3-phase nominal ac input and 125-V dc nominal output. The Division III emergency battery chargers are constant potential chargers rated for 50 amp continuous capacity with 575-V, 3-phase nominal ac input and 125-V dc nominal output. Each charger is capable of automatically regulating the output voltage within ±1 percent of the rated value at any load between 0 and 100 percent, with ±10 percent variation in the ac input voltage. Each charger is capable of maintaining the connected battery in a fully charged condition by supplying float charge at 133 to 135 V or an equalizing charge at 139.8 V for Divisions I and II and 137.5 V for Division III while supplying the steady-state dc loads. Each charger can also recharge the battery from the designed minimum charge condition after an emergency discharge to full charge in 24 hr while supplying the steady-state dc loads.

Each emergency battery charger is fed from a 600-V emergency power source belonging to the same division. Division I battery

chargers 2BYS*CHGR2A1 and 2BYS*CHGR2A2 are fed from Division I 600-V emergency lighting panel 2LAC*PNL100A, and 600-V emergency distribution panel 2EJS*PNL100A, respectively. Division II battery chargers 2BYS*CHGR2B1 and 2BYS*CHGR2B2 are fed from Division II 600-V emergency lighting panel 2LAC*PNL300B and 600-V emergency distribution panel 2EJS*PNL300B, respectively. Division III battery chargers 2BYS*CHGR2C1 and 2BYS*CHGR2C2 are fed from Division III emergency MCC 2EHS*MCC201.

Each emergency battery charger has an input circuit breaker for protection against internal charger faults and for use as a manual disconnecting device. Each charger has an output circuit breaker for protection of the battery against the charger internal faults as well as for manual disconnection. Each charger has an ammeter and a voltmeter in the output circuit to indicate the output current and voltage. Each Division I and II charger has an overvoltage alarm circuit that alarms when the charger dc output voltage exceeds a manually preset value. Each Division III charger has an overvoltage shutdown circuit that disconnects the charger ac input when it exceeds a manually preset value. The chargers are current limiting; the current limit can be set between 110 and 125 percent of the rated output current.

The emergency battery chargers of the three divisions are floor mounted in the three emergency switchgear rooms in the control building at el 261 ft. The battery chargers are qualified for their service environments (temperature, pressure, humidity, and radiation) in accordance with IEEE-323-1974. They are seismically qualified in accordance with IEEE-344-1975. The qualification procedures, test results, and analysis are detailed in Sections 3.10 and 3.11.

Emergency 125-V Dc Switchgear Each emergency battery is connected to an emergency 125-V dc switchgear or distribution panel through a circuit breaker. Two emergency battery chargers associated with each emergency battery for Division I and II are also connected to the same switchgear through their appropriate circuit breakers. This is accomplished by using a breaker alternately between the battery charger switchgear cubicles or by installing a breaker in each of the battery charger switchgear cubicles. In the event there are breakers installed in both of the battery charger switchgear cubicles, one of the breakers shall be placed in the "Disconnect" position and locked-out while the other breaker is closed. This precludes more than one battery charger being connected to the Division I and II switchgear bus at any time. The Division I emergency battery and battery chargers are connected to emergency 125-V dc switchgear 2BYS*SWG002A. The Division II emergency battery and battery chargers are connected to emergency switchgear 2BYS*SWG002B. The Division III emergency battery and battery chargers are connected to emergency 125-V dc panel 2CES*IPNL414.

Division I and II emergency 125-V dc switchgear are metal enclosed, low-voltage type. The switchgear buses are arranged in a two-wire ungrounded configuration. The bus continuous rating is 2,000 amp. The main and feeder breakers are manually-operated air circuit breakers with either long time and short time, or long time and instantaneous overcurrent protective devices. The main breaker for the battery is rated for the maximum 1-min demand on the battery. All the circuit breakers are rated for 25-kA minimum interrupting capability. Each switchgear has ground detection and bus undervoltage alarms. There are two undervoltage relays in each switchgear. One relay energizes an alarm in the control room when the bus voltage drops below 125 V dc. The other relay annunciates if the bus voltage drops below 110 V dc. Each emergency switchgear also has local ammeters for indicating the battery and the charger currents and a voltmeter to indicate bus voltage. The currents and voltage also are indicated in the main control room for monitoring. The Division I and II emergency switchgear are located in the Division I and II emergency switchgear rooms in the control building at el 261 ft.

The Division III emergency 125-V dc panel is designated as 2CES*IPNL414. The bus is rated for 100 amp which is based on the maximum 1-min demand on the battery. The main and feeder breakers are molded-case circuit breakers with overcurrent protective devices. The main breaker for the battery is rated for the maximum 1-min demand on the battery. The circuit breakers are rated for 10-kA interrupting capability. The panel has ground detection and bus undervoltage alarm. Loss of power to the battery chargers and the bus undervoltage conditions is annunciated in the control room when the bus voltage falls below 125 V dc. The bus voltage and the battery current are indicated in the control room for monitoring. The Division III emergency 125-V dc panel is located in the Division III diesel generator control room in the EDG building at el 261 ft.

The Division I and II emergency 125-V dc systems utilize other emergency distribution panels connected to the dc switchgear for miscellaneous dc circuits. These panels are in NEMA 12 enclosures suitable for indoor application. These panels have fusible switches for branch circuit protection.

Safety-Related Dc System Instrumentation and Control

Remote indications and alarms are provided for all three divisions in the main control room for monitoring the status of the emergency dc system as follows:

1. Indications:

    a. Ammeter for the battery current.

    b. A common ammeter for the primary and backup charger output currents.

c. Voltmeters for the dc bus voltages.

2. Alarms:

a. Division I dc system trouble alarm, actuated by the Division I dc bus undervoltage/overvoltage bus ground, battery breaker open, and battery charger undervoltage.

b. Division II dc system trouble alarm, actuated by the Division II dc bus undervoltage/overvoltage, bus ground, battery breaker open, and battery charger undervoltage.

c. Division III dc system trouble alarm, actuated by the Division III dc bus undervoltage/overvoltage, bus ground, and battery breaker open. If the battery terminal voltage inadvertently drops to 125 V, control room alarm "Division 3 emergency dc bus 125 V dc system trouble" will be annunciated with no time delay. The same alarm also will be reannunciated at 115 V dc if the battery terminal voltage drops further. This will alert the Operator to take necessary action to restore the bus voltage. If the bus voltage is not restored, the battery will continue to supply all connected dc loads assuming that the battery chargers are not available.

d. One ground detection control switch with one test push button for each battery for ground detection.

Local indications are provided for each battery current and dc bus voltage on the associated dc switchgear (Divisions I and II) or distribution panel (Division III).

Safety-Related Dc System Testing and Maintenance

The emergency dc system has been designed to permit periodic inspection and testing of the system. Each battery cell has high and low electrolyte level markers on all four sides. The emergency battery rooms have adequate space to permit battery inspection, maintenance, removal, and testing. Each emergency battery is connectable to a battery test load for battery capacity testing.

The regular inspection and maintenance of the emergency batteries is performed in accordance with RG 1.129 (IEEE-450-1980). Preoperational and periodic testing of the batteries are performed in accordance with RG 1.32 (IEEE-308-1974), 1.128 (IEEE-484-1975 or IEEE-484-1987), and 1.129 (IEEE-450-1980) to ensure continued integrity and reliability of the emergency dc system. Provisions have been made in each Class 1E dc switchgear

(Division I and II), or dc panel (Division III) to connect the test load to the battery for battery capacity testing (See Figure 8.3-10). For each of Division I and Division II, a breaker cubicle has been provided for this purpose. There is only one breaker to be used with these two cubicles. This breaker is usually stored in the cubicle on Division I bus. For Division III, the battery breaker and the test load breaker are manually operated with position indication. These breakers are administratively controlled such that the test load is not connected during normal operation. The test load is a portable resistor bank. It is temporarily connected to the "test load" connections on the particular switchgear to be tested. It is moved from one switchgear to another for testing. The load bank is stored disconnected from the switchgear when testing is complete. The Division I and Division II service test is performed as part of the preoperational test after installation and will be repeated as part of the preoperational test or prior to startup if there is any significant change in the dc system design. A battery performance discharge test is performed in accordance with the schedule outlined in Technical Specifications.

All components of the emergency dc system are designed as Class 1E and Category I for their service environments (temperature, radiation, and humidity). The qualification procedures, test results, and analysis are given in Sections 3.10 and 3.11.

Originally, the FMEA for the dc power system was contained in the Unit 2 FMEA document, which is historical. FMEAs for plant systems are now performed and controlled by the design process.

8.3.2.1.3 Nonsafety-Related Dc Power System

Identification

The dc power system equipment and components required for normal operation of the plant, but not required for safe shutdown of the reactor in case of a DBA, are classified as nonsafety related, normal, or non-Class 1E. These items of equipment and components are identified by black color or no-color coding as are components of the nonsafety-related onsite ac power system. The nonsafety-related dc power system consists of the normal 125-V dc system and the normal ±24-V dc system. The normal 125-V dc system feeds all nonsafety-related dc instrumentation, control, and other dc loads, and consists of three 125-V batteries with associated battery chargers, dc switchgear, and distribution panels. The ±24-V dc system feeds all NMS loads, and consists of two 24-V batteries with associated battery chargers and distribution panels.

Nonsafety-Related Dc System Load

The loads connected to different nonsafety-related batteries and battery chargers are as follows:

1. 125-V normal battery 2BYS-BAT1A:

   a. Control power for all nonsafety-related 13.8-V and 4.16-kV switchgear, 600-V load centers, and associated relay and instrumentation control circuits.

   b. Fire protection system loads.

   c. Emergency bearing oil pump.

   d. Plant normal UPS systems 2VBB-UPS1A and 2VBB-UPS1C.

   e. Control power for main transformers 2MTX-XM1A and 2MTX-XM1C.

   f. Control power for generator field breaker.

   g. Control power for 115-kV circuit switchers.

   h. Control power for reserve Station service transformer 2RTX-XSRIA.

   i. Control power for normal Station service transformer 2STX-XNS1.

   j. Standby diesel generator fuel pump.

2. 125-V normal battery 2BYS-BAT1B:

   a. Control power for all nonsafety-related 13.8-kV and 4.16-kV switchgear, 600-V load centers, and associated relay and instrumentation control circuits.

   b. Fire protection system loads.

   c. Emergency seal oil pump.

   d. Plant normal UPS systems 2VBB-UPSID and 2VBB-UPS3B.

   e. Control power for main transformers 2MTX-XM1B and 2MTX-XM1D.

   f. Control power for generator field breaker.

   g. Control power for 115-kV circuit switchers.

   h. Control power for reserve Station service transformer 2RTX-XSRIB.

   i. Standby diesel generator fuel pump.

j. Energy management system remote terminal unit (EMS RTU).

3. 125-V normal battery 2BYS-BAT1C: plant computer UPS 2VBB-UPS1G, normal system UPS 2VBB-UPS1B and RPS UPS 2VBB-UPS3A.

4. 24-V normal batteries 2BWS-BAT3A and 2BWS-BAT3C: NMS.

5. 24-V normal batteries 2BWS-BAT3B and 2BWS-BAT3D: NMS.

The battery load profiles are given in Tables 8.3-11 through 8.3-15.

Nonsafety-Related 125-V Dc Power System Description

The nonsafety-related 125-V dc power system consists of three subsystems each consisting of its own battery, battery charger, and dc switchgear or distribution panel as follows:

125-V Dc Battery	Battery Charger	Dc Switchgear
2BYS-BAT1A	2BYS-CHGR1A1	2BYS-SWG001A
2BYS-BAT1B	2BYS-CHGR1B1	2BYS-SWG001B
2BYS-BAT1C	2BYS-CHGR1C1	2BYS-SWG001C

Each battery is sized in accordance with IEEE-485-1978 and capable of performing its duty cycle following the loss of charger after the battery had been floated between 130 and 135 V dc, while fully charged at 65°F, and with capacity deteriorated to 80 percent. Adequate design margin is included for various contingencies and future load growth. Each battery can start and operate all required loads for 2 hr according to the battery load profile without battery terminal voltage falling below 105 V dc should the battery charger be out of service at any point in the dc load cycle. The batteries are lead-acid with 5,100 amp-hr capacity. Each battery is connectable to a test load for battery load testing.

Each normal 125-V dc battery has a normal battery charger having a nominal output of 125-V dc with a nominal input of 575 V, 3 phase ac. Each battery charger can supply the continuous load on the battery excluding the UPS loads while recharging the battery from the design minimum charge state to the fully-charged state in 24 hr. The chargers are constant potential current-limiting type rated for 500 amps. Each charger is fed from one of the 600-V stub bus load centers that are connectable to the standby diesel generators in case of a LOOP without any DBA condition.

Each normal 125-V dc battery and its associated battery charger is connected to a dc switchgear via manually-operated air circuit breakers. The switchgear bus is arranged in a two-wire ungrounded configuration. The battery breaker and the bus are rated for the maximum 1-min demand on the battery. The feeder

circuit breakers are manually-operated air circuit breakers with long time, short time or long time instantaneous overcurrent protective devices. Each dc switchgear is equipped with local battery ammeters and a bus voltmeter. Two undervoltage relays are provided in each dc switchgear. One relay actuates an alarm in the control room when the bus voltage drops below 125 V dc. The other relay actuates an alarm when the bus voltage drops below 110 V dc. Each switchgear also has provided a ground fault relay that actuates an alarm in the control room.

Nonsafety-Related ±24-V Dc Power System

The ±24-V dc power system provides two redundant dc power sources for the NMS. The ±24-V dc system is illustrated on Figure 8.3-10. Each of the redundant systems consists of a three-wire bus, two 24-V dc batteries, and two 24-V dc battery chargers. One of the batteries is connected between the positive and the common ground wire; the other battery is connected between the negative and the common ground wire. Each charger is connected to the same buses as its associated battery.

The 24-V dc batteries 2BWS-BAT3A, 3B, 3C, and 3D are lead-acid batteries. The battery discharge rating is 100-amp/hr on an 8-hr basis. The batteries are sized in accordance with IEEE-485-1978. Each battery is capable of performing its duty cycle following the loss of charger after the battery had been floated between 26 and 27 V dc, while fully charged at 65°F, and with capacity deteriorated to 80 percent. Adequate design margin is provided for various contingencies and future load growth. Each battery can start and operate all required loads for 4 hr according to the battery load profile without battery terminal voltage falling below 21 V dc should the charger be out of service at any point of the dc load cycle.

Each 24-V dc battery has a normal battery charger with a nominal output of 24-V dc and a nominal input of 120/240-V 1-phase ac. The chargers are rated for 25 amps. The chargers are current limiting and protected against feedback. Each charger is capable of carrying the maximum continuous steady-state loads on the battery while recharging the battery from the design minimum charge state to the fully charged state in 24 hr. Each charger is fed from a 600-V stub bus distribution panel through a 600-120/240-V distribution transformer.

The ±24-V dc distribution panel boards are in NEMA 12 enclosure. The batteries and the battery chargers are connected to the panel through fusible disconnect switches. The feeder circuits are also protected by fusible disconnect switches.

The normal battery, battery chargers, dc switchgear, and distribution panels are located in the normal switchgear room in the control building. The battery rooms have sufficient ventilation to limit hydrogen accumulation to less than 2 percent by volume and to maintain battery room temperatures between 65°

and 104°F. The battery rooms have smoke detectors. They have adequate illumination and space to facilitate inspection, maintenance, testing, and replacement.

Nonsafety-Related Dc System Instrumentation and Control

Remote indications and alarms are provided in the control rooms for monitoring the status of each of the normal dc systems as follows:

1. Indications:

   a. Battery charging/discharging current.

   b. Battery charger supply current.

   c. Dc bus voltage.

2. Alarms:

   a. Station batteries 2BYS-BAT1A, -1B, and -1C 125-V dc system trouble alarm. This is actuated by bus undervoltage/overvoltage bus ground, battery breaker open, and battery charger undervoltage.

   b. Normal ±24-V dc distribution panel 2BWS-PNL300A undervoltage.

   c. Normal ±24-V dc distribution panel 2BWS-PNL300B undervoltage.

8.3.2.2 Analysis

The plant emergency dc power system is designed in accordance with the general design criteria and the applicable regulatory guides to meet the requirements of capacity, independence, redundancy, and testability. The method of conformance is described in the following paragraphs.

General Design Criterion 17

The plant emergency dc power system is divided into three divisions, each division feeding a separate safety-related load group. Each division has adequate capacity and capability to supply its connected dc loads under normal conditions of plant operation, and to perform its required duty cycle in case of a LOCA or any other DBA and LOOP. Each division is physically separate from and electrically independent of any other division. The components of each division are located in separate rooms in a Category I structure. The cables and raceways associated with each division are physically separated from the cables and raceways of the other divisions in accordance with the criteria outlined in Section 8.3.1.4. Thus, any failure in one division

of the plant dc power system will not jeopardize the safety function of any other division.

General Design Criterion 18

The emergency dc power system is designed to permit appropriate periodic inspection and testing to ensure continued integrity and reliability of the system. Each emergency battery includes a pilot cell with a thermometer and a hydrometer to measure the electrolyte temperature and specific gravity. Each emergency battery is connectable to a battery test load for periodic battery capacity testing. The periodic testing schedule is described in Section 8.3.2.1.2.

Regulatory Guide 1.6

The plant emergency dc loads are divided into three separate load groups described in Section 8.3.2.1.2. The Division I load group includes all emergency dc loads associated with Division I of the onsite ac power system. The Division II load group includes all emergency dc loads associated with Division II of the onsite ac power system. The Division III load group includes all emergency dc loads associated with Division III of the onsite ac power system. Since any two out of the three divisions of the onsite ac power system are capable of bringing the plant to a safe shutdown in case of a DBA, loss of any one group of the emergency dc loads will not jeopardize the capability of the onsite power system to safely shut down the reactor in case of a DBA.

Each of the three emergency dc load groups is energized by the emergency battery and the battery chargers of the respective divisions. The emergency battery and the battery chargers of each division are physically separated from and electrically independent of the battery and battery chargers of any other division. The emergency battery and battery chargers of one division are not permitted to be interconnected with the battery and battery chargers or the emergency dc load groups of any other division under any conditions of plant operation.

Regulatory Guide 1.32 and IEEE-308-1974

The emergency dc power system is designed to meet the requirements of adequate capacity, physical separation, and electrical isolation throughout the dc power sources, distribution system, and the connected loads. Each emergency battery is capable of starting and operating its required loads for the specified duration. Each battery is maintained in a fully-charged condition and is immediately available to its loads during both normal operations and following the loss of power from the ac system. Each emergency battery is connectable to a battery capacity test load for periodic battery capacity testing. Each emergency battery has two 100-percent chargers, each capable of supplying the largest combined demands of the various continuous steady-state dc loads while recharging the battery

from the design minimum charge to the fully-charged state in 24 hr. Each emergency battery charger has disconnecting devices in the input ac circuit and the output dc circuit. Each charger is current limiting and has feedback protective devices. Adequate local and remote instrumentation is provided to monitor the status of the dc power supply (Section 8.3.2.1.2).

Preoperational and periodic testing of the emergency dc system is performed in accordance with the requirements of RG 1.32 and 1.129. The battery testing schedule is described in Section 8.3.2.1.2.

Unit 2 consists of one unit only and the emergency dc systems are not shared with any other unit.

Regulatory Guide 1.47

The Division I and II emergency 125-V dc systems are each provided with control room "bypassed/inoperable" indication if the system is bypassed manually or if each of the emergency battery and battery charger breakers are in the open position. The Division III HPCS emergency 125-V dc system battery and battery charger breaker open position is annunciated in the control room in a common "trouble" window. Loss of Division III 125-V dc will cause a HPCS 4-kV emergency bus system level "inoperable/bypassed" annunciation in the control room. Each HPCS 4-kV breaker has an individual Class 1E "inoperable" status light in the control room.

Regulatory Guide 1.75 and IEEE-384-1977

The plant emergency dc distribution system is designed to comply with the physical separation and electrical isolation requirements specified in RG 1.75 and IEEE-384-1977. The method of conformance is described in Section 8.3.1.2.10. The criteria used for electrical isolation and physical separation are described in Section 8.3.1.4.

Regulatory Guide 1.81

Unit 2 does not share its electric power system with any other nuclear power unit and hence, this regulatory guide does not apply.

Regulatory Guide 1.106

This regulatory guide does not require valves to have thermal overload protection devices. For the dc MOVs with an active safety function, there are no thermal overload protection devices. During periodic testing, the valve's motor operator performance will be monitored and possible overload conditions investigated.

There are some safety-related dc MOVs that have overload heaters but do not have an active safety function. For these valves, the overload heaters will remain in the circuit to provide annunciation.

Regulatory Guide 1.118 and IEEE-338-1977

The emergency dc power system is designed to permit periodic testing of the components and the system. The periodic testing program is addressed in Technical Specifications.

Regulatory Guide 1.128 and IEEE-484-1975 or IEEE-484-1987

The emergency batteries are installed in accordance with the requirements of this regulatory guide and IEEE standard. The three emergency batteries are located in three emergency battery rooms in the control building (el 261 ft) which is a Category I structure. The emergency battery rooms are spacious enough to permit periodic inspection, testing and maintenance, and replacement. Each battery is adequately illuminated and independently ventilated to limit the hydrogen accumulation to less than 4 percent by volume at any location within the battery area. The batteries are mounted on two-step Category I racks with insulated restraining members arranged to prevent motion of the cells relative to each other or to the rack. Each emergency battery room has ventilation air flow sensors with alarms and smoke detectors with alarms.

Regulatory Guide 1.129 and IEEE-450-1980

The emergency batteries are designed to permit inspection, testing, and maintenance in accordance with RG 1.129 (Section 8.3.2.1.2).

8.3.2.3 Physical Identification of Safety-Related Dc System Equipment

The safety-related dc system equipment is identified by color coding and alphanumeric coding in the same manner as the safety-related onsite ac system equipment is identified (Section 8.3.1.3).

8.3.2.4 Independence of Redundant Systems

The three divisions of the emergency dc power system are completely independent of each other. The independence is maintained throughout the battery and battery chargers, the distribution system, and the loads as described in Section 8.3.1.4.

8.3.2.5 Station Blackout Capability

The capability of the Class 1E and non-Class 1E batteries to supply SBO loads is addressed in Section 8.3.1.5.

8.3.3 Fire Protection for Cable System

The measures employed for the prevention of and protection against fire in electrical cables are described in Section 9.5.1. Cable derating and cable tray fill, and fire barriers and separation between redundant trays, are described in Section 8.3.1.

8.3.4 References

1. Insulated Power Cable Engineers Association. Thermoplastic-Insulated Wire and Cables for the Transmission and Distribution of Electrical Energy. Publication No. S-61-402.

2. Insulated Power Cable Engineers Association. Power Cable Assemblies - Copper Conductors. Publication No. P-46-426, 1962.

3. Insulated Power Cable Engineers Association. Ampacities, Cables in Open-Top Cable Trays. Publication No. P-54-440, 1976.

4. NEDO-10905, High Pressure Core Spray System Power Supply Unit, May 1973, Class 1.

5. Letter No. NMP2L 1194 from C. D. Terry (NMPC) to NRC, dated April 13, 1989.

6. Letter No. NMP2L 1230 from C. D. Terry (NMPC) to NRC, dated April 3, 1990.

7. Letter from D. S. Brinkman (NRC) to B. R. Sylvia (NMPC), Station Blackout Rule Safety Evaluation - Nine Mile Point Nuclear Station Unit No. 2 (TAC No. 68571), dated May 29, 1991.

8. Letter No. NMP2L 1308 from C. D. Terry (NMPC) to NRC, dated July 1, 1991.

9. Letter from J. E. Menning (NRC) to B. R. Sylvia (NMPC), Station Blackout Rule Supplementation Safety Evaluation - Nine Mile Point Nuclear Station Unit No. 2 (TAC No. 68571), dated November 21, 1991.

10. Letter No. NMP2L 1331 from C. D. Terry (NMPC) to NRC, dated January 2, 1992.

11. Letter from R. A. Laura (NRC) to B. R. Sylvia (NMPC), Station Blackout Rule Supplemental Safety Evaluation Response Closure - Nine Mile Point Nuclear Station Unit 2 (TAC No. M68571), dated February 7, 1992.

12. Letter No. NMP2L 1365 from C. D. Terry (NMPC) to NRC, dated January 4, 1993.

13. Licensing Topical Report, Power Uprate Licensing Evaluation for Nine Mile Point Nuclear Power Station Unit 2, NEDC-31994P, Revision 1, May 1993.

UPDATED SAFETY ANALYSIS REPORT

NINE MILE POINT NUCLEAR STATION — UNIT 2

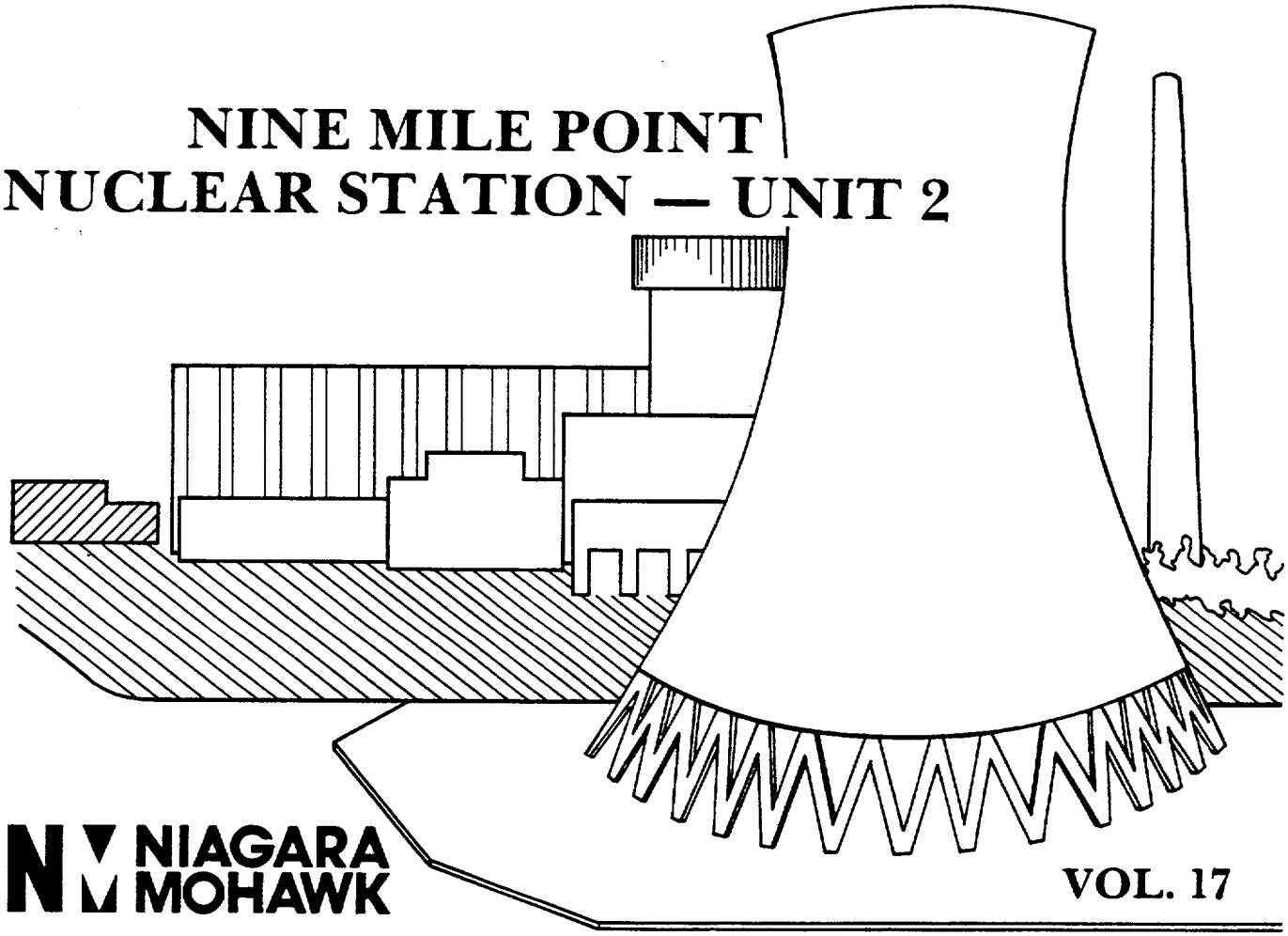

NIAGARA MOHAWK

VOL. 17

TABLE 8.3-1 (Cont'd.)

Power Source: 2EHS*MCC101

					Design Basis Accident Diesel Generator Loading Possibilities									Nonaccident Loading		
					Simultaneous LOOP & LOCA			LOOP With Delayed LOCA			LOCA With Delayed LOOP			LOOP With Unit Trip		
Equip ID	Desc.	Rating Units	Volts Phase	ST PF RUNPF	STKW1 STKVR1	STTIME1	RUNKW1 RUNKVR1	STKW2 STKVR2	STTIME2	RUNKW2 RUNKVR2	STKW3 STKVR3	STTIME3	RUNKW3 RUNKVR3	STKW4 STKVR4	STTIME4	RUNKW4 RUNKVR4
2SWP* MOV77A	Motor-Operated Gate Vlv	0.7 HP	575. 3	0.6 0.85	4.2 5.6	T = 0	1.2 0.74	4.2 5.6	T = 0	1.2 0.74	4.2 5.6	T = 0	1.2 0.74	4.2 5.6	T = 0	1.2 0.74
2SWP* SSR1A	Bar Rack Heater	2.8 KW	332. 1	1. 1.	2.8 0.	T = 0	2.8 0.	2.8 0.	T = 0	2.8 0.	2.8 0.	T = 0	2.8 0.	2.8 0.	T = 0	2.8 0.
2SWP* SSR2A	Bar Rack Heater	2.8 KW	332. 1	1. 1.	2.8 0.	T = 0	2.8 0.	2.8 0.	T = 0	2.8 0.	2.8 0.	T = 0	2.8 0.	2.8 0.	T = 0	2.8 0.
2SWP* SSR3A	Bar Rack Heater	2.8 KW	332. 1	1. 1.	2.8 0.	T = 0	2.8 0.	2.8 0.	T = 0	2.8 0.	2.8 0.	T = 0	2.8 0.	2.8 0.	T = 0	2.8 0.
2SWP* SSR4A	Bar Rack Heater	2.8 KW	332. 1	1. 1.	2.8 0.	T = 0	2.8 0.	2.8 0.	T = 0	2.8 0.	2.8 0.	T = 0	2.8 0.	2.8 0.	T = 0	2.8 0.
2SWP* SSR5A	Bar Rack Heater	2.8 KW	332. 1	1. 1.	2.8 0.	T = 0	2.8 0.	2.8 0.	T = 0	2.8 0.	2.8 0.	T = 0	2.8 0.	2.8 0.	T = 0	2.8 0.
2SWP* SSR6A	Bar Rack Heater	2.8 KW	332. 1	1. 1.	2.8 0.	T = 0	2.8 0.	2.8 0.	T = 0	2.8 0.	2.8 0.	T = 0	2.8 0.	2.8 0.	T = 0	2.8 0.
2SWP* STR4A	Strainer SW	3. HP	575. 3	0.35 0.85	6.3 16.9	T = 0	2.5 1.6	6.3 16.9	T = 0	2.5 1.6	6.3 16.9	T = 0	2.5 1.6	6.3 16.9	T = 0	2.5 1.6
2SWP* STR4C	Strainer SW	3. HP	575. 3	0.35 0.85	6.3 16.9	T=>10 min (MAN)	2.5 1.6	6.3 16.9	T=>10 min (MAN)	2.5 1.6	6.3 16.9	T=>10 min (MAN)	2.5 1.6	6.3 16.9	T=>10 min (MAN)	2.5 1.6
2SWP* STR4E	Strainer SW	3. HP	575. 3	0.35 0.85	6.3 16.9	T=>10 min (MAN)	2.5 1.6	6.3 16.9	T=>10 min (MAN)	2.5 1.6	6.3 16.9	T=>10 min (MAN)	2.5 1.6	6.3 16.9	T=>10 min (MAN)	2.5 1.6

TABLE 8.3-1 (Cont'd.)

Total Load On: 2EHS*MCC101

Design Basis Accident Diesel Generator Loading Possibilities									Nonaccident Loading		
Simultaneous LOOP & LOCA			LOOP With Delayed LOCA			LOCA With Delayed LOOP			LOOP With Unit Trip		
Starting KW KVAR	Running KW KVAR	Time Span	Starting KW KVAR	Running KW KVAR	Time Span	Starting KW KVAR	Running KW KVAR	Time Span	Starting KW KVAR	Running KW KVAR	Time Span
317 634	0 0	0<=T<6 sec	317 634	0 0	0<=T<6 sec	317 634	0 0	0<=T<6 sec	317 634	0 0	0<=T<6 sec
0 0	123 66	6<=T<120 sec	0 0	123 66	6<=T<120 sec	0 0	123 66	6<=T<120 sec	0 0	123 66	6<=T<120 sec
0 0	91 46	120<=T<600 sec	0 0	91 46	120<=T<600 sec	0 0	91 46	120<=T<600 sec	0 0	91 46	120<=T<600 sec
30 57	91 46	600<=T<606 sec	30 57	91 46	600<=T<606 sec	30 57	91 46	600<=T<606 sec	30 57	91 46	600<=T<606 sec
0 0	101 52	606<=T<720 sec	0 0	101 52	606<=T<720 sec	0 0	101 52	606<=T<720 sec	0 0	101 52	606<=T<720 sec
0 0	97 49	720 sec<=T	0 0	97 49	720 sec<=T	0 0	97 49	720 sec<=T	0 0	97 49	720 sec<=T

TABLE 8.3-1 (Cont'd.)

Power Source: 2EHS*MCC102

					Design Basis Accident Diesel Generator Loading Possibilities									Nonaccident Loading		
					Simultaneous LOOP & LOCA			LOOP With Delayed LOCA			LOCA With Delayed LOOP			LOOP With Unit Trip		
Equip ID	Desc.	Rating Units	Volts Phase	ST PF RUNPF	STKW1 STKVR1	STTIME1	RUNKW1 RUNKVR1	STKW2 STKVR2	STTIME2	RUNKW2 RUNKVR2	STKW3 STKVR3	STTIME3	RUNKW3 RUNKVR3	STKW4 STKVR4	STTIME4	RUNKW4 RUNKVR4
2EJS* PNL103 A	AB-N Emer. 600-V Panel	400. A	600. 3	0.35 0.85	73. 64.	T = 0	59.4 5.83	73. 64.	T = 0	59.4 5.83	73. 64.	T = 0	59.4 5.83	73. 64.	T = 0	59.4 5.83
2EJS* PNL104 A	AB-N Emer. 600-V Panel	400. A	600. 3	0.35 0.85	70.4 135.4	T = 0	40.4 12.72	70.4 135.4	T = 0	40.4 12.72	70.4 135.4	T = 0	40.4 12.72	70.4 135.4	T = 0	40.4 12.72
2FWS* MOV21A	Feedwtr to Reactor	26.4 HP	575. 3	0.6 0.85	158.4 211.2	T=>10 min (MAN)	44.9 28.	158.4 211.2	T=>10 min (MAN)	44.9 28.	158.4 211.2	T=>10 min (MAN)	44.9 28.	158.4 211.2	T=>10 min (MAN)	44.9 28.
2FWS* MOV21B	Feedwtr to Reactor	26.4 HP	575. 3	0.6 0.85	158.4 211.2	T=>10 min (MAN)	44.9 28.	158.4 211.2	T=>10 min (MAN)	44.9 28.	158.4 211.2	T=>10 min (MAN)	44.9 28.	158.4 211.2	T=>10 min (MAN)	44.9 28.
2GTS* FN1A	SGTS Filter Train Dischrg Fan	40. HP	575. 3	0.35 0.85	84. 225.	T = 0	34. 21.	84. 225.	T = 0	34. 21.	84. 225.	T = 0	34. 21.	84. 225.	T = 0	34. 21.
2GTS* MOV1A	HVR Mix Plenum to SGTS	0.33 HP	575. 3	0.6 0.85	2 2.6	T = 0	0.56 0.35	2. 2.6	T = 0	0.56 0.35	2. 2.6	T = 0	0.56 0.35	2. 2.6	T = 0	0.56 0.35
2GTS* MOV28A	Cross Bleed L Valve	2. HP	575. 3	0.6 0.85	12. 16.	T = 0	3.4 2.1	12. 16.	T = 0	3.4 2.1	12. 16.	T = 0	3.4 2.1	12. 16.	T = 0	3.4 2.1
2GTS* MOV2A	SGTS Filter Train A Inlet	2. HP	575. 3	0.6 0.85	12. 16.	T = 0	3.4 2.1	12. 16.	T = 0	3.4 2.1	12. 16.	T = 0	3.4 2.1	12. 16.	T = 0	3.4 2.1
2GTS* MOV3A	SGTS Filter Train A Dischrg	2. HP	575. 3	0.6 0.85	12. 16.	T = 0	3.4 2.1	12. 16.	T = 0	3.4 2.1	12. 16.	T = 0	3.4 2.1	12. 16.	T = 0	3.4 2.1
2GTS* MOV4B	Decay Heat Cooler to Train B	1. HP	575. 3	0.6 0.85	6. 8.	T = 0	1.7 1.	6. 8.	T = 0	1.7 1.	6. 8.	T = 0	1.7 1.	6. 8.	T = 0	1.7 1.

TABLE 8.3-1 (Cont'd.)

Power Source: 2EHS*MCC103

					Design Basis Accident Diesel Generator Loading Possibilities									Nonaccident Loading		
					Simultaneous LOOP & LOCA			LOOP With Delayed LOCA			LOCA With Delayed LOOP			LOOP With Unit Trip		
Equip ID	Desc.	Rating Units	Volts Phase	ST PF RUNPF	STKW1 STKVR1	STTIME1	RUNKW1 RUNKVR1	STKW2 STKVR2	STTIME2	RUNKW2 RUNKVR2	STKW3 STKVR3	STTIME3	RUNKW3 RUNKVR3	STKW4 STKVR4	STTIME4	RUNKW4 RUNKVR4
2RHS* MOV8A	Heat Exchgr A Bypass	1.6 HP	575. 3	0.6 0.85	9.6 12.8	T = 0	2.7 1.7	9.6 12.8	T = 0	2.7 1.7	9.6 12.8	T = 0	2.7 1.7	9.6 12.8	T=>10 min (MAN)	2.7 1.7
2RHS* MOV9A	RHR Pump A to Heat Exchgr A	0.7 HP	575. 3	0.6 0.85	4.2 5.6	T=>10 min (MAN)	1.2 0.74	4.2 5.6	T=>10 min (MAN)	1.2 0.74	4.2 5.6	T=>10 min (MAN)	1.2 0.74	4.2 5.6	T=>10 min (MAN)	1.2 0.74
2SWP* FV47A	SW to CWS Pumps	0.75 HP	575. 3	0.35 0.85	4.2 5.6	T=>10 min (MAN)	1.2 0.74	4.2 5.6	T=>10 min (MAN)	1.2 0.74	4.2 5.6	T=>10 min (MAN)	1.2 0.74	4.2 5.6	T=>10 min (MAN)	1.2 0.74
2SWP* FV54A	SWP A Header Press	0.75 HP	575. 3	0.35 0.85	4.2 5.6	T = 0	1.2 0.74	4.2 5.6	T = 0	1.2 0.74	4.2 5.6	T = 0	1.2 0.74	4.2 5.6	T = 0	1.2 0.74
2SWP* MOV599	SW to Dischrg Tunnel Isolat.	1.6 HP	575. 3	0.6 0.85	9.6 12.8	T = 0	2.7 1.7	9.6 12.8	T = 0	2.7 1.7	9.6 12.8	T = 0	2.7 1.7	9.6 12.8	T = 0	2.7 1.7
2SWP* MOV66A	SW to Standby Coolers EA	1. HP	575. 3	0.6 0.85	6. 8.	T = 0	1.7 1.	6. 8.	T = 0	1.7 1.	6. 8.	T = 0	1.7 1.	6. 8.	T = 0	1.7 1.
2SWP* MOV67A	SW to Control Relay Rm Chiller	0.66 HP	575. 3	0.6 0.85	4. 5.3	T=>10 min (MAN)	1.12 0.69	4. 5.3	T=>10 min (MAN)	1.12 0.69	4. 5.3	T=>10 min (MAN)	1.12 0.69	4. 5.3	T=>10 min (MAN)	1.12 0.69
2SWP* MOV93A	SW to Dischrg Tunnel Isolat.	1. HP	575. 3	0.6 0.85	6. 8.	T = 0	1.7 1.	6. 8.	T = 0	1.7 1.	6. 8.	T = 0	1.7 1.	6. 8.	T = 0	1.7 1.
2SWP* MOV95A	SW to Standby DG Coolers	1. HP	575. 3	0.6 0.85	6. 8.	T=>10 min (MAN)	1.7 1.	6. 8.	T=>10 min (MAN)	1.7 1.	6. 8.	T=>10 min (MAN)	1.7 1.	6. 8.	T=>10 min (MAN)	1.7 1.
2SWP* P2A	Reactor Bldg. Chiller SW Pump A	10. HP	575. 3	0.35 0.85	21. 56.	T = 0	8.5 5.3	21. 56.	T = 0	8.5 5.3	21. 56.	T = 0	8.5 5.3	21. 56.	T = 0	8.5 5.3

TABLE 8.3-1 (Cont'd.)

Total Load On: 2EHS*MCC103

Design Basis Accident Diesel Generator Loading Possibilities									Nonaccident Loading		
Simultaneous LOOP & LOCA			LOOP With Delayed LOCA			LOCA With Delayed LOOP			LOOP With Unit Trip		
Starting KW KVAR	Running KW KVAR	Time Span	Starting KW KVAR	Running KW KVAR	Time Span	Starting KW KVAR	Running KW KVAR	Time Span	Starting KW KVAR	Running KW KVAR	Time Span
586 1151	0 0	0<=T<5 sec	586 1151	0 0	0<=T<5 sec	586 1151	0 0	0<=T<5 sec	325 802	0 0	0<=T<5 sec
692 1435	0 0	5<=T<6 sec	692 1435	0 0	5<=T<6 sec	692 1435	0 0	5<=T<6 sec	431 1086	0 0	5<=T<6 sec
106 284	200 125	6<=T<9 sec	106 284	200 125	6<=T<9 sec	106 284	200 125	6<=T<9 sec	106 284	125 78	6<=T<9 sec
117 299	200 125	9<=T<11 sec	117 299	200 125	9<=T<11 sec	117 299	200 125	9<=T<11 sec	106 284	125 78	9<=T<11 sec
11 15	243 152	11<=T<12	11 15	243 152	11<=T<12	11 15	243 152	11<=T<12	0 0	168 105	11<=T<12
95 240	243 152	12<=T<15	95 240	243 152	12<=T<15	95 240	243 152	12<=T<15	84 225	168 105	12<=T<15
84 225	246 154	15<=T<18	84 225	246 154	15<=T<18	84 225	246 154	15<=T<18	84 225	168 105	15<=T<18
0 0	279 173	18<=T<120	0 0	279 173	18<=T<120	0 0	279 173	18<=T<120	0 0	202 125	18<=T<120
0 0	198 122	120<=T<600 sec	0 0	198 122	120<=T<600 sec	0 0	198 122	120<=T<600 sec	0 0	191 118	120<=T<600 sec
125 167	198 122	600<=T<606 sec	125 167	198 122	600<=T<606 sec	125 167	198 122	600<=T<606 sec	0 0	199 123	720<=T<1800 sec
0 0	234 144	606<=T<720 sec	0 0	234 144	606<=T<720 sec	0 0	234 144	606<=T<720 sec	4 6	199 123	1800<=T<1806 sec
0 0	203 126	720 sec<=T	0 0	203 126	720 sec<=T	0 0	203 126	720 sec<=T	0 0	200 124	1806<=T<1920 sec
0 0	0 0		0 0	0 0		0 0	0 0		0 0	199 123	1920 sec<=T

TABLE 8.3-1 (Cont'd.)

Power Source: 2NHS-MCC011

					Design Basis Accident Diesel Generator Loading Possibilities									Nonaccident Loading		
					Simultaneous LOOP & LOCA			LOOP With Delayed LOCA			LOCA With Delayed LOOP			LOOP With Unit Trip		
Equip ID	Desc.	Rating Units	Volts Phase	ST PF RUNPF	STKW1 STKVR1	STTIME1	RUNKW1 RUNKVR1	STKW2 STKVR2	STTIME2	RUNKW2 RUNKVR2	STKW3 STKVR3	STTIME3	RUNKW3 RUNKVR3	STKW4 STKVR4	STTIME4	RUNKW4 RUNKVR4
2DRS-UC2A	Drywell Cooler 2A	10. HP	575. 3	0.35 0.85	0. 0.	NOTE 1	0. 0.	-0- -0-	NOTE 1	-0- -0-	-0- -0-	NOTE 1	-0- -0-	21. 56.	T=30 min (MAN)	8.5 5.3
2DRS-UC2C	Drywell Cooler 2C	10. HP	575. 3	0.35 0.85	0. 0.	NOTE 1	0. 0.	-0- -0-	NOTE 1	-0- -0-	-0- -0-	NOTE 1	-0- -0-	21. 56.	T=30 min (MAN)	8.5 5.3
2DRS-UC3A	Drywell Cooler 3A	15. HP	575. 3	0.35 0.85	0. 0.	NOTE 1	0. 0.	-0- -0-	NOTE 1	-0- -0-	-0- -0-	NOTE 1	-0- -0-	31.5 84.6	T=30 min (MAN)	12.75 7.95
2HTS-XD108	Dist. Xfmr Ht. Tracing System	25. KVA	575. 3	1. 1.	0. 0.	NOTE 1	0. 0.	-0- -0-	NOTE 1	-0- -0-	-0- -0-	NOTE 1	-0- -0-	300. 0.	T = 0	25. 0.
2IAS-C2	ADS Valve Comp.	7.5 HP	575. 3	0.35 0.85	0. 0.	NOTE 1	0. 0.	-0- -0-	NOTE 1	-0- -0-	-0- -0-	NOTE 1	-0- -0-	0. 0.	Not Req'd	0. 0.
2RCS* MOV10A	Recirc. Pump A Suction Valve	4. HP	575. 3	0.6 0.85	0. 0.	NOTE 1	0. 0.	-0- -0-	NOTE 1	-0- -0-	-0- -0-	NOTE 1	-0- -0-	24. 32.	T = 0	6.8 4.24
2RCS* MOV18A	Recirc. Pump A Suction Valve	4. HP	575. 3	0.6 0.85	0. 0.	NOTE 1	0. 0.	-0- -0-	NOTE 1	-0- -0-	-0- -0-	NOTE 1	-0- -0-	24. 32.	T = 0	6.8 4.24
2SLS* CH1	SLCS Storage Tank Mix Htr.	40. KW	575. 3	1. 1.	0. 0.	NOTE 1	0. 0.	-0- -0-	NOTE 1	-0- -0-	-0- -0-	NOTE 1	-0- -0-	40. 0.	T = 0	40. 0.
2SLS-CH2	SLCS Storage Tank Oper Htr.	10. KW	575. 3	1. 1.	0. 0.	NOTE 1	0. 0.	-0- -0-	NOTE 1	-0- -0-	-0- -0-	NOTE 1	-0- -0-	10. 0.	T = 0	10. 0.
2WCS* MOV101	RCS to RWCU	0.7 HP	575. 3	0.6 0.85	0. 0.	NOTE 1	0. 0.	-0- -0-	NOTE 1	-0- -0-	-0- -0-	NOTE 1	-0- -0-	3.6 4.8	T = 0	1. 0.64

TABLE 8.3-1 (Cont'd.)

Power Source: 2NJS-US5

					Design Basis Accident Diesel Generator Loading Possibilities									Nonaccident Loading		
					Simultaneous LOOP & LOCA			LOOP With Delayed LOCA			LOCA With Delayed LOOP			LOOP With Unit Trip		
Equip ID	Desc.	Rating Units	Volts Phase	ST PF RUNPF	STKW1 STKVR1	STTIME1	RUNKW1 RUNKVR1	STKW2 STKVR2	STTIME2	RUNKW2 RUNKVR2	STKW3 STKVR3	STTIME3	RUNKW3 RUNKVR3	STKW4 STKVR4	STTIME4	RUNKW4 RUNKVR4
2BYS-CHGR1A	125-V Battery Charger	500. A	575. 3	0.85 0.85	0. 0.	NOTE 1	0. 0.	-0- -0-	NOTE 1	-0- -0-	-0- -0-	NOTE 1	-0- -0-	260. 1300.	T = 0	100. 62.35
2IAS-C1A	Inst. Air Comp. A	200. HP	575. 3	0.35 0.85	0. 0.	NOTE 1	0. 0.	-0- -0-	NOTE 1	-0- -0-	-0- -0-	NOTE 1	-0- -0-	420. 1124.	MAN. As Req'd.	170. 105.
2NJS-PNL500	Dist. Panel 600-V	225. A	575. 3	0.2 0.85	0. 0.	NOTE 1	0. 0.	-0- -0-	NOTE 1	-0- -0-	-0- -0-	NOTE 1	-0- -0-	268. 1344.	T = 0	95.2 59.4
2VBB-XD500	Isolat. Xfmr UPS	112.5 KVA	575. 3	0.2 0.85	0. 0.	NOTE 1	0. 0.	-0- -0-	NOTE 1	-0- -0-	-0- -0-	NOTE 1	-0- -0-	270. 1350.	T = 0	96. 59.6
2VBB-XD501	Isolat. Xfmr UPS	112.5 KVA	575. 3	0.2 0.85	0. 0.	NOTE 1	0. 0.	-0- -0-	NOTE 1	-0- -0-	-0- -0-	NOTE 1	-0- -0-	270. 1350.	T = 0	96. 59.6
2WCS-P1A	RWCU Pump A	150. HP	575. 3	0.35 0.85	0. 0.	NOTE 1	0. 0.	-0- -0-	NOTE 1	-0- -0-	-0- -0-	NOTE 1	-0- -0-	315. 843.	T = 0	127.5 79.5

TABLE 8.3-2 (Cont'd.)

Total Load On: 2EJS*US3

Design Basis Accident Diesel Generator Loading Possibilities									Nonaccident Loading		
Simultaneous LOOP & LOCA			LOOP With Delayed LOCA			LOCA With Delayed LOOP			LOOP With Unit Trip		
Starting KW KVAR	Running KW KVAR	Time Span	Starting KW KVAR	Running KW KVAR	Time Span	Starting KW KVAR	Running KW KVAR	Time Span	Starting KW KVAR	Running KW KVAR	Time Span
7200 36000	0 0	0<=T<0.1 sec	7200 36000	0 0	0<=T<0.1 sec	7200 36000	0 0	0<=T<0.1 sec	7200 36000	0 0	0<=T<0.1 sec
0 0	38 0	0.1<=T<5 sec	0 0	38 0	0.1<=T<5 sec	0 0	38 0	0.1<=T<5 sec	0 0	38 0	0.1<=T<5 sec
315 843	38 0	5<=T<11 sec	315 843	38 0	5<=T<11 sec	315 843	38 0	5<=T<11 sec	315 843	38 0	5<=T<11 sec
0 0	166 80	11<=T<30 sec	0 0	166 80	11<=T<30 sec	0 0	166 80	11<=T<30 sec	0 0	166 80	11<=T<30 sec
378 1012	166 80	30<=T<36 sec	378 1012	166 80	30<=T<36 sec	378 1012	166 80	30<=T<36 sec	378 1012	166 80	30<=T<36 sec
0 0	319 176	36<=T<9000 sec	0 0	319 176	36<=T<9000 sec	0 0	319 176	36<=T<9000 sec	0 0	319 176	36 sec<=T
120 0	319 176	9000<=T<9006 sec	120 0	319 176	9000<=T<9006 sec	120 0	319 176	9000<=T<9006 sec	0 0	0 0	0
0 0	439 176	9006 sec<=T	0 0	439 176	9006 sec<=T	0 0	439 176	9006 sec<=T	0 0	0 0	0

TABLE 8.3-2 (Cont'd.)

Power Source: 2EHS*MCC301

					Design Basis Accident Diesel Generator Loading Possibilities									Nonaccident Loading		
					Simultaneous LOOP & LOCA			LOOP With Delayed LOCA			LOCA With Delayed LOOP			LOOP With Unit Trip		
Equip ID	Desc.	Rating Units	Volts Phase	ST PF RUNPF	STKW1 STKVR1	STTIME1	RUNKW1 RUNKVR1	STKW2 STKVR2	STTIME2	RUNKW2 RUNKVR2	STKW3 STKVR3	STTIME3	RUNKW3 RUNKVR3	STKW4 STKVR4	STTIME4	RUNKW4 RUNKVR4
2SWP* MOV77B	Motor-Operated Gate Valve	0.7 HP	575. 3	0.6 0.85	4.2 5.6	T = 0	1.2 0.74	4.2 5.6	T = 0	1.2 0.74	4.2 5.6	T = 0	1.2 0.74	4.2 5.6	T = 0	1.2 0.74
2SWP* SSR1B	Bar Rack Heater	2.8 KW	332. 1	1. 1.	2.8 0.	T = 0	2.8 0.	2.8 0.	T = 0	2.8 0.	2.8 0.	T = 0	2.8 0.	2.8 0.	T = 0	2.8 0.
2SWP* SSR2B	Bar Rack Heater	2.8 KW	332. 1	1. 1.	2.8 0.	T = 0	2.8 0.	2.8 0.	T = 0	2.8 0.	2.8 0.	T = 0	2.8 0.	2.8 0.	T = 0	2.8 0.
2SWP* SSR3B	Bar Rack Heater	2.8 KW	332. 1	1. 1.	2.8 0.	T = 0	2.8 0.	2.8 0.	T = 0	2.8 0.	2.8 0.	T = 0	2.8 0.	2.8 0.	T = 0	2.8 0.
2SWP* SSR4B	Bar Rack Heater	2.8 KW	332. 1	1. 1.	2.8 0.	T = 0	2.8 0.	2.8 0.	T = 0	2.8 0.	2.8 0.	T = 0	2.8 0.	2.8 0.	T = 0	2.8 0.
2SWP* SSR5B	Bar Rack Heater	2.8 KW	332. 1	1. 1.	2.8 0.	T = 0	2.8 0.	2.8 0.	T = 0	2.8 0.	2.8 0.	T = 0	2.8 0.	2.8 0.	T = 0	2.8 0.
2SWP* SSR6B	Bar Rack Heater	2.8 KW	332. 1	1. 1.	2.8 0.	T = 0	2.8 0.	2.8 0.	T = 0	2.8 0.	2.8 0.	T = 0	2.8 0.	2.8 0.	T = 0	2.8 0.
2SWP* STR4B	Strainer SW	3. HP	575. 3	0.35 0.85	6.3 16.9	T = 0	2.5 1.6	6.3 16.9	T = 0	2.5 1.6	6.3 16.9	T = 0	2.5 1.6	6.3 16.9	T = 0	2.5 1.6
2SWP* STR4D	Strainer SW	3. HP	575. 3	0.35 0.85	6.3 16.9	T=>10 min (MAN)	2.5 1.6	6.3 16.9	T=>10 min (MAN)	2.5 1.6	6.3 16.9	T=>10 min (MAN)	2.5 1.6	6.3 16.9	T=>10 min (MAN)	2.5 1.6
2SWP* STR4F	Strainer SW	3. HP	575. 3	0.35 0.85	6.3 16.9	T=>10 min (MAN)	2.5 1.6	6.3 16.9	T=>10 min (MAN)	2.5 1.6	6.3 16.9	T=>10 min (MAN)	2.5 1.6	6.3 16.9	T=>10 min (MAN)	2.5 1.6

TABLE 8.3-2 (Cont'd.)

Total Load On: 2EHS*MCC301

Design Basis Accident Diesel Generator Loading Possibilities									Nonaccident Loading		
Simultaneous LOOP & LOCA			LOOP With Delayed LOCA			LOCA With Delayed LOOP			LOOP With Unit Trip		
Starting KW KVAR	Running KW KVAR	Time Span	Starting KW KVAR	Running KW KVAR	Time Span	Starting KW KVAR	Running KW KVAR	Time Span	Starting KW KVAR	Running KW KVAR	Time Span
317 634	0 0	0<=T<6 sec	317 634	0 0	0<=T<6 sec	317 634	0 0	0<=T<6 sec	317 634	0 0	0<=T<6 sec
0 0	123 65	6<=T<120 sec	0 0	123 65	6<=T<120 sec	0 0	123 65	6<=T<120 sec	0 0	123 65	6<=T<120 sec
0 0	91 48	120<=T<600 sec	0 0	91 48	120<=T<600 sec	0 0	91 48	120<=T<600 sec	0 0	91 48	120<=T<600 sec
30 57	91 48	600<=T<606 sec	30 57	91 48	600<=T<606 sec	30 57	91 48	600<=T<606 sec	30 57	91 48	600<=T<606 sec
0 0	101 55	606<=T<720 sec	0 0	101 55	606<=T<720 sec	0 0	101 55	606<=T<720 sec	0 0	101 55	606<=T<720 sec
0 0	97 52	720 sec<=T	0 0	97 52	720 sec<=T	0 0	97 52	720 sec<=T	0 0	97 52	720 sec<=T

TABLE 8.3-2 (Cont'd.)

Power Source: 2EHS*MCC302

					Design Basis Accident Diesel Generator Loading Possibilities									Nonaccident Loading		
					Simultaneous LOOP & LOCA			LOOP With Delayed LOCA			LOCA With Delayed LOOP			LOOP With Unit Trip		
Equip ID	Desc.	Rating Units	Volts Phase	ST PF RUNPF	STKW1 STKVR1	STTIME1	RUNKW1 RUNKVR1	STKW2 STKVR2	STTIME2	RUNKW2 RUNKVR2	STKW3 STKVR3	STTIME3	RUNKW3 RUNKVR3	STKW4 STKVR4	STTIME4	RUNKW4 RUNKVR4
2GTS* MOV4A	Decay Ht Cooler to Train A	1. HP	575. 3	0.6 0.85	6. 8.	T = 0	1.7 1.	6. 8.	T = 0	1.7 1.	6. 8.	T = 0	1.7 1.	6. 8.	T = 0	1.7 1.
2HCS* MOV1B	Wetwell Hydro Recomb. Iso Vlv	0.7 HP	575. 3	0.6 0.85	4.2 5.6	T=>10 min (MAN)	1.2 0.74	4.2 5.6	T=>10 min (MAN)	1.2 0.74	4.2 5.6	T=>10 min (MAN)	1.2 0.74	4.2 5.6	T=>10 min (MAN)	1.2 0.74
2HCS* MOV2B	Wetwell Hydro Recomb. Iso Vlv	0.33 HP	575. 3	0.6 0.85	2. 2.7	T=>10 min (MAN)	0.56 0.35	2. 2.7	T=>10 min (MAN)	0.56 0.35	2. 2.7	T=>10 min (MAN)	0.56 0.35	2. 2.7	T=>10 min (MAN)	0.56 0.35
2HCS* MOV3B	Wetwell Hydro Recomb. Iso Vlv	0.7 HP	575. 3	0.6 0.85	4.2 5.6	T=>10 min (MAN)	1.2 0.74	4.2 5.6	T=>10 min (MAN)	1.2 0.74	4.2 5.6	T=>10 min (MAN)	1.2 0.74	4.2 5.6	T=>10 min (MAN)	1.2 0.74
2HCS* MOV4B	Drywell Hydro Recomb. Iso Vlv	0.33 HP	575. 3	0.6 0.85	2. 2.7	T=>10 min (MAN)	0.56 0.35	2. 2.7	T=>10 min (MAN)	0.56 0.35	2. 2.7	T=>10 min (MAN)	0.56 0.35	2. 2.7	T=>10 min (MAN)	0.56 0.35
2HCS* MOV5B	Drywell Hydro Recomb. Iso Vlv	0.33 HP	575. 3	0.6 0.85	2. 2.7	T=>10 min (MAN)	0.56 0.35	2. 2.7	T=>10 min (MAN)	0.56 0.35	2. 2.7	T=>10 min (MAN)	0.56 0.35	2. 2.7	T=>10 min (MAN)	0.56 0.35
2HCS* MOV6B	Drywell Hydro Recomb. Iso Vlv	0.33 HP	575. 3	0.6 0.85	2. 2.7	T=>10 min (MAN)	0.56 0.35	2. 2.7	T=>10 min (MAN)	0.56 0.35	2. 2.7	T=>10 min (MAN)	0.56 0.35	2. 2.7	T=>10 min (MAN)	0.56 0.35

TABLE 8.3-2 (Cont'd.)

Power Source: 2EHS*MCC303

					Design Basis Accident Diesel Generator Loading Possibilities									Nonaccident Loading		
					Simultaneous LOOP & LOCA			LOOP With Delayed LOCA			LOCA With Delayed LOOP			LOOP With Unit Trip		
Equip ID	Desc.	Rating Units	Volts Phase	ST PF RUNPF	STKW1 STKVR1	STTIME1	RUNKW1 RUNKVR1	STKW2 STKVR2	STTIME2	RUNKW2 RUNKVR2	STKW3 STKVR3	STTIME3	RUNKW3 RUNKVR3	STKW4 STKVR4	STTIME4	RUNKW4 RUNKVR4
2RHS* MOV4C	RHR Min. Flow to Supp. Pool	1.9 HP	575. 3	0.6 0.85	11.4 15.2	T = 14 sec	3.23 2.	11.4 15.2	T = 14 sec	3.23 2.	11.4 15.2	T = 14 sec	3.23 2.	-0- -0-	Not Req'd	-0- -0-
2RHS* MOV67B	RHR Shutdown Bypass	0.33 HP	575. 3	0.6 0.85	2. 2.7	T = 0	0.56 0.35	2. 2.7	T = 0	0.56 0.35	2. 2.7	T = 0	0.56 0.35	2. 2.7	T=>10 min (MAN)	0.56 0.35
2RHS* MOV80B	Globe Valve	0.13 HP	575. 3	0.6 0.85	0.78 1.	T = 0	0.22 0.14	0.78 1.	T = 0	0.22 0.14	0.78 1.	T = 0	0.22 0.14	0.78 1.	T=>10 min (MAN)	0.22 0.14
2RHS* MOV8B	Heat Exchngr B Bypass	1.6 HP	575. 3	0.6 0.85	9.6 12.8	T = 0	2.72 1.69	9.6 12.8	T = 0	2.72 1.69	9.6 12.8	T = 0	2.72 1.69	9.6 12.8	T=>10 min (MAN)	2.72 1.69
2RHS* MOV9B	RHR Pump B to Heat Exchngr B	0.7 HP	575. 3	0.6 0.85	4.2 5.6	T=>10 min (MAN)	1.2 0.74	4.2 5.6	T=>10 min (MAN)	1.2 0.74	4.2 5.6	T=>10 min (MAN)	1.2 0.74	4.2 5.6	T=>10 min (MAN)	1.2 0.74
2RHS* P2	RHR Sys. Pressure System	10. HP	575. 3	0.35 0.85	21. 56.	T = 0	8.5 5.3	21. 56.	T = 0	8.5 5.3	21. 56.	T = 0	8.5 5.3	21. 56.	T = 0	8.5 5.3
2SWP* FV47B	SW to CWS Pumps	0.75 HP	575. 3	0.6 0.85	4.2 5.6	T=>10 min (MAN)	1.2 0.74	4.2 5.6	T=>10 min (MAN)	1.2 0.74	4.2 5.6	T=>10 min (MAN)	1.2 0.74	4.2 5.6	T=>10 min (MAN)	1.2 0.74
2SWP* FV54B	SWP B Header Pressure	0.75 HP	575. 3	0.6 0.85	4.2 5.6	T = 0	1.2 0.74	4.2 5.6	T = 0	1.2 0.74	4.2 5.6	T = 0	1.2 0.74	4.2 5.6	T = 0	1.2 0.74
2SWP* MOV66B	SW to Standby DG Coolers E3B	1. HP	575. 3	0.6 0.85	6. 8.	T = 0	1.7 1.	6. 8.	T = 0	1.7 1.	6. 8.	T = 0	1.7 1.	6. 8.	T = 0	1.7 1.
2SWP* MOV67B	SW to Control Relay Rm Chiller	0.66 HP	575. 3	0.6 0.85	4. 5.3	T=>10 min (MAN)	1.1 0.69	4. 5.3	T=>10 min (MAN)	1.1 0.69	4. 5.3	T=>10 min (MAN)	1.1 0.69	4. 5.3	T=>10 min (MAN)	1.1 0.69

TABLE 8.3-2 (Cont'd.)

Total Load On: 2EHS*MCC303

Design Basis Accident Diesel Generator Loading Possibilities									Nonaccident Loading		
Simultaneous LOOP & LOCA			LOOP With Delayed LOCA			LOCA With Delayed LOOP			LOOP With Unit Trip		
Starting KW KVAR	Running KW KVAR	Time Span	Starting KW KVAR	Running KW KVAR	Time Span	Starting KW KVAR	Running KW KVAR	Time Span	Starting KW KVAR	Running KW KVAR	Time Span
614 1189	0 0	0<=T<5 sec	614 1189	0 0	0<=T<5 sec	614 1189	0 0	0<=T<5 sec	314 788	0 0	0<=T<5 sec
698 1414	0 0	5<=T<6 sec	698 1414	0 0	5<=T<6 sec	698 1414	0 0	5<=T<6 sec	398 1013	0 0	5<=T<6 sec
84 225	208 129	6<=T<9 sec	84 225	208 129	6<=T<9 sec	84 225	208 129	6<=T<9 sec	84 225	112 70	6<=T<9 sec
95 240	208 129	9<=T<11 sec	95 240	208 129	9<=T<11 sec	95 240	208 129	9<=T<11 sec	84 225	112 70	9<=T<11 sec
11 15	242 150	11<=T<12 sec	11 15	242 150	11<=T<12 sec	11 15	242 150	11<=T<12 sec	0 0	146 90	11<=T<12 sec
117 299	242 150	12<=T<14 sec	117 299	242 150	12<=T<14 sec	117 299	244 151	12<=T<14 sec	106 284	146 90	12<=T<14 sec
128 314	242 150	14<=T<15 sec	128 314	242 150	14<=T<15 sec	128 314	242 150	14<=T<15 sec	106 284	146 90	14<=T<15 sec
117 299	245 152	15<=T<18 sec	117 299	245 152	15<=T<18 sec	117 299	245 152	15<=T<18 sec	106 284	146 90	15<=T<18 sec
11 15	288 179	18<=T<20 sec	11 15	288 179	18<=T<20 sec	11 15	288 179	18<=T<20 sec	0 0	189 117	18<=T<20 sec
0 0	291 181	20<=T<120 sec	0 0	291 181	20<=T<120 sec	0 0	291 181	20<=T<120 sec	0 0	189 117	20<=T<120 sec
0 0	199 123	120<=T<600 sec	0 0	199 123	120<=T<600 sec	0 0	199 123	120<=T<600 sec	0 0	189 117	120<=T<600 sec
160 242	199 123	600<=T<606 sec	160 242	199 123	600<=T<606 sec	160 242	199 243	600<=T<606 sec	316 449	189 117	606<=T<606 sec
0 0	247 153	606<=T<720 sec	0 0	247 153	606<=T<720 sec	0 0	247 153	606<=T<720 sec	0 0	281 174	606<=T<720 sec
0 0	212 131	720<=T sec	0 0	212 131	720<=T sec	0 0	212 131	720<=T sec	0 0	206 128	720<=T sec

TABLE 8.3-2 (Cont'd.)

Power Source: 2NHS-MCC009

					Design Basis Accident Diesel Generator Loading Possibilities									Nonaccident Loading		
					Simultaneous LOOP & LOCA			LOOP With Delayed LOCA			LOCA With Delayed LOOP			LOOP With Unit Trip		
Equip ID	Desc.	Rating Units	Volts Phase	ST PF RUNPF	STKW1 STKVR1	STTIME1	RUNKW1 RUNKVR1	STKW2 STKVR2	STTIME2	RUNKW2 RUNKVR2	STKW3 STKVR3	STTIME3	RUNKW3 RUNKVR3	STKW4 STKVR4	STTIME4	RUNKW4 RUNKVR4
2WCS-P6C	RWCU Filter Demin. Holdup Pump C	3. HP	575. 3	0.35 0.85	-0- -0-	NOTE 1	-0- -0-	-0- -0-	NOTE 1	-0- -0-	-0- -0-	NOTE 1	-0- -0-	6.3 16.86	T = 0	2.55 1.6
2WCS-P6D	RWCU Filter Demin. Holdup Pump D	3. HP	575. 3	0.35 0.85	-0- -0-	NOTE 1	-0- -0-	-0- -0-	NOTE 1	-0- -0-	-0- -0-	NOTE 1	-0- -0-	6.3 16.86	T = 0	2.55 1.6

TABLE 8.3-2 (Cont'd.)

Power Source: 2NHS-MCC012

					Design Basis Accident Diesel Generator Loading Possibilities									Nonaccident Loading		
					Simultaneous LOOP & LOCA			LOOP With Delayed LOCA			LOCA With Delayed LOOP			LOOP With Unit Trip		
Equip ID	Desc.	Rating Units	Volts Phase	ST PF RUNPF	STKW1 STKVR1	STTIME1	RUNKW1 RUNKVR1	STKW2 STKVR2	STTIME2	RUNKW2 RUNKVR2	STKW3 STKVR3	STTIME3	RUNKW3 RUNKVR3	STKW4 STKVR4	STTIME4	RUNKW4 RUNKVR4
2CCP-MOV1B	RBCLCW To Dry-well Cooler Outbrd Iso	0.13 HP	575. 3	0.6 0.85	-0- -0-	NOTE 1	-0- -0-	-0- -0-	NOTE 1	-0- -0-	-0- -0-	NOTE 1	-0- -0-	0.78 1.	T = 0	0.22 0.14
2CCP-MOV1D	RBCLCW To Dry-well Cooler Outbrd Iso	0.13 HP	575. 3	0.6 0.85	-0- -0-	NOTE 1	-0- -0-	-0- -0-	NOTE 1	-0- -0-	-0- -0-	NOTE 1	-0- -0-	0.78 1.	T = 0	0.22 0.14
2CCP-MOV2B	RBCLCW To Dry-well Cooler Outbrd Iso	0.13 HP	575. 3	0.6 0.85	-0- -0-	NOTE 1	-0- -0-	-0- -0-	NOTE 1	-0- -0-	-0- -0-	NOTE 1	-0- -0-	0.78 1.	T = 0	0.22 0.14
2CCP-MOV2D	RBCLCW To Dry-well Cooler Outbrd Iso	0.13 HP	575. 3	0.6 0.85	-0- -0-	NOTE 1	-0- -0-	-0- -0-	NOTE 1	-0- -0-	-0- -0-	NOTE 1	-0- -0-	0.78 1.	T = 0	0.22 0.14
2CCP-MOV3B	RBCLCW To Dry-well Cooler Outbrd Iso	0.13 HP	575. 3	0.6 0.85	-0- -0-	NOTE 1	-0- -0-	-0- -0-	NOTE 1	-0- -0-	-0- -0-	NOTE 1	-0- -0-	0.78 1.	T = 0	0.22 0.14
2CCP-P2B	RBCLCW Instr. Air Cprsr Cooling	10. HP	575. 3	0.35 0.85	-0- -0-	NOTE 1	-0- -0-	-0- -0-	NOTE 1	-0- -0-	-0- -0-	NOTE 1	-0- -0-	0. 0.	Not Req'd	0. 0.
2DER-MOV128	RPV Drain	0.33 HP	575. 3	0.6 0.85	-0- -0-	NOTE 1	-0- -0-	-0- -0-	NOTE 1	-0- -0-	-0- -0-	NOTE 1	-0- -0-	2. 2.6	T = 0	0.56 0.35
2DER-MOV129	RPV Drain	0.33 HP	575. 3	0.6 0.85	-0- -0-	NOTE 1	-0- -0-	-0- -0-	NOTE 1	-0- -0-	-0- -0-	NOTE 1	-0- -0-	2. 2.6	T = 0	0.56 0.35

TABLE 8.3-2 (Cont'd.)

Power Source: 2NHS-MCC012 (cont'd.)

					Design Basis Accident Diesel Generator Loading Possibilities									Nonaccident Loading		
					Simultaneous LOOP & LOCA			LOOP With Delayed LOCA			LOCA With Delayed LOOP			LOOP With Unit Trip		
Equip ID	Desc.	Rating Units	Volts Phase	ST PF RUNPF	STKW1 STKVR1	STTIME1	RUNKW1 RUNKVR1	STKW2 STKVR2	STTIME2	RUNKW2 RUNKVR2	STKW3 STKVR3	STTIME3	RUNKW3 RUNKVR3	STKW4 STKVR4	STTIME4	RUNKW4 RUNKVR4
2DRS-UC1B	Drywell Cooler 1B	20. HP	575. 3	0.35 0.85	-0- -0-	NOTE 1	-0- -0-	-0- -0-	NOTE 1	-0- -0-	-0- -0-	NOTE 1	-0- -0-	42. 112.4	T=>10 min (MAN)	17. 10.6
2DRS-UC1D	Drywell Cooler 1D	20. HP	575. 3	0.35 0.85	-0- -0-	NOTE 1	-0- -0-	-0- -0-	NOTE 1	-0- -0-	-0- -0-	NOTE 1	-0- -0-	42. 112.4	T=>10 min (MAN)	17. 10.6
2DRS-UC2B	Drywell Cooler 2B	10. HP	575. 3	0.35 0.85	-0- -0-	NOTE 1	-0- -0-	-0- -0-	NOTE 1	-0- -0-	-0- -0-	NOTE 1	-0- -0-	21. 56.	T=>10 min (MAN)	8.5 5.3
2DRS-UC2D	Drywell Cooler 2D	10. HP	575. 3	0.35 0.85	-0- -0-	NOTE 1	-0- -0-	-0- -0-	NOTE 1	-0- -0-	-0- -0-	NOTE 1	-0- -0-	21. 56.	T=>10 min (MAN)	8.5 5.3
2DRS-UC3B	Drywell Cooler 3B	15. HP	575. 3	0.35 0.85	-0- -0-	NOTE 1	-0- -0-	-0- -0-	NOTE 1	-0- -0-	-0- -0-	NOTE 1	-0- -0-	31.5 84.6	T=>10 min (MAN)	12.75 7.95
2MSS* MOV108	Vent Valve	0.33 HP	575. 3	0.6 0.85	-0- -0-	NOTE 1	-0- -0-	-0- -0-	NOTE 1	-0- -0-	-0- -0-	NOTE 1	-0- -0-	2. 2.6	T = 0	0.56 0.35
2MSS* MOV189	Main Steam Valve	0.33 HP	575. 3	0.6 0.85	-0- -0-	NOTE 1	-0- -0-	-0- -0-	NOTE 1	-0- -0-	-0- -0-	NOTE 1	-0- -0-	2. 2.6	T = 0	0.56 0.35
2MSS* MOV207	Main Steam Valve	0.33 HP	575. 3	0.6 0.85	-0- -0-	NOTE 1	-0- -0-	-0- -0-	NOTE 1	-0- -0-	-0- -0-	NOTE 1	-0- -0-	2. 2.6	T = 0	0.56 0.35
2RCS* MOV10B	Recirc. Pump B Suction Valve	4. HP	575. 3	0.6 0.85	-0- -0-	NOTE 1	-0- -0-	-0- -0-	NOTE 1	-0- -0-	-0- -0-	NOTE 1	-0- -0-	24. 32.	T = 0	6.8 4.2

TABLE 8.3-2 (Cont'd.)

Power Source: 2NJS-US6

					Design Basis Accident Diesel Generator Loading Possibilities									Nonaccident Loading		
					Simultaneous LOOP & LOCA			LOOP With Delayed LOCA			LOCA With Delayed LOOP			LOOP With Unit Trip		
Equip ID	Desc.	Rating Units	Volts Phase	ST PF RUNPF	STKW1 STKVR1	STTIME1	RUNKW1 RUNKVR1	STKW2 STKVR2	STTIME2	RUNKW2 RUNKVR2	STKW3 STKVR3	STTIME3	RUNKW3 RUNKVR3	STKW4 STKVR4	STTIME4	RUNKW4 RUNKVR4
2BYS-CHGR1 B1	125-V Battery Charger	500. A	575. 3	0.2 0.85	-0- -0-	NOTE 1	-0- -0-	-0- -0-	NOTE 1	-0- -0-	-0- -0-	NOTE 1	-0- -0-	260. 1274.	T = 0	100. 62.35
2BYS-CHGR1 C1	125-V Battery Charger	500. A	575. 3	0.2 0.85	-0- -0-	NOTE 1	-0- -0-	-0- -0-	NOTE 1	-0- -0-	-0- -0-	NOTE 1	-0- -0-	260. 1274.	T = 0	100. 62.35
2IAS-C1B	Inst. Air Comp. B	200. HP	575. 3	0.35 0.85	-0- -0-	NOTE 1	-0- -0-	-0- -0-	NOTE 1	-0- -0-	-0- -0-	NOTE 1	-0- -0-	420. 1124.	T = 0 MAN	170. 105.
2NJS-PNL600	Dist. Panel 600 V	225. A	600. 3	0.35 0.85	-0- -0-	NOTE 1	-0- -0-	-0- -0-	NOTE 1	-0- -0-	-0- -0-	NOTE 1	-0- -0-	231. 618.	T = 0	93.5 58.
2TMG-M1	Turb. Turning Gear	60. HP	575. 3	0.35 0.85	-0- -0-	NOTE 1	-0- -0-	-0- -0-	NOTE 1	-0- -0-	-0- -0-	NOTE 1	-0- -0-	126. 337.	T = 10 sec	51. 32.
2VBB-XD600	Isol. Xfrmr UPS	112.5 KVA	575. 3	0.2 0.85	-0- -0-	NOTE 1	-0- -0-	-0- -0-	NOTE 1	-0- -0-	-0- -0-	NOTE 1	-0- -0-	270. 1323.	T = 0	95.65 59.26
2VBB-XD601	Isol. Xfrmr UPS	112.5 KVA	575. 3	0.2 0.85	-0- -0-	NOTE 1	-0- -0-	-0- -0-	NOTE 1	-0- -0-	-0- -0-	NOTE 1	-0- -0-	270. 1323.	T = 0	95.65 59.26
2VBB-XD602	Isol. Xfrmr UPS	112.5 KVA	575. 3	0.2 0.85	-0- -0-	NOTE 1	-0- -0-	-0- -0-	NOTE 1	-0- -0-	-0- -0-	NOTE 1	-0- -0-	270. 1323.	T = 0	95.65 59.26
2WCS-P1B	RWCU Pump B	150. HP	575. 3	0.35 0.85	-0- -0-	NOTE 1	-0- -0-	-0- -0-	NOTE 1	-0- -0-	-0- -0-	NOTE 1	-0- -0-	315. 843.	T = 0	127.5 79.5

NOTE: Power supply to the panel 2LAS-PNL400 can be connected temporarily, for the outage duration, from 2NJS-US4 to 2NJS-US6. Reference Procedure N2-PM-@029, Safety Evaluation 96-080.

TABLE 8.3-4

LIST OF CLASS 1E SAFETY-RELATED LOADS BY POWER SOURCE

Equipment Identity No.	Description[1]	Division[2]	Rating	Volts	Phase	Amps Full Load	Amps Locked Rotor	Power Source Identity No.
2HVC*UC108A	Unit cooler CB standby switchgear room A	G	10 hp	575	3	10.80	64.3	2EJS*PNL102A
2SWP*FV54A	Motor-operated pressure valve	G	0.75 hp	575	3	1.1	29.20	2EHS*MCC103
2SWP*FV54B	Motor-operated pressure valve	Y	0.75 hp	575	3	1.04	29.20	2EHS*MCC303
2VBS*PNLA103	Control room RPS and NS4 distribution panel	G	200 A	120	1	100.0	-	2VBS*PNLA100
2VBS*PNLA104	RPS and N54 distribution panel	O	200 A	120	1	100.0	-	2VBS*PNLA100
2VBS*PNLA105	MSIV distribution panel	G	200 A	120	1	100.0	-	2VBS*PNLA100
2VBS*PNLA106	MSIV distribution panel	Y/W	200 A	120	1	100.00	-	2VBS*PNLA100
2VBS*PNLA110	Control room RPS distribution panel	B/W	200 A	120	1	100.00	-	2VBS*PNLA100
2VBS*PNLB103	Control room RPS distribution panel	Y	200 A	120	1	100.0	-	2VBS*PNLB100
2VBS*PNLB104	RPS and NS4 distribution panel	B	200 A	120	1	100.0	-	2VBS*PNLB100
2VBS*PNLB105	MSIV distribution panel	G/W	200 A	120	1	200.0	-	2VBS*PNLB100
2VBS*PNLB106	MSIV distribution panel	Y	200 A	120	1	200.0	-	2VBS*PNLB100
2VBS*PNLB110	Control room RPS distribution panel	O/W	200 A	120	1	100.0	-	2VBS*PNLB100
2EGS*EG1	DG Div. I	G	5,500 kVA	4,160	3	763.3	-	Diesel generator
2EGS*EG2	DG Div. III	P	3,250 kVA	4,160	3	451	-	Diesel generator
2EGS*EG3	DG Div. II	Y	5,500 kVA	4,160	3	763.3	-	Diesel generator
2BYS*SWG002A	125-V dc switchgear	G	2,000 A	125	0	229*	-	2BYS*BAT2A
2BYS*SWG002B	125-V dc switchgear	Y	2,000 A	125	0	182*	-	2BYS*BAT2B
2BYS*BAT2A	125-V 1E standby battery Div. I	G	2,500 AH	125	0	330	-	2BYS*CHGR2A1

* Average load between 1 min to 119 min.

TABLE 8.3-4 (Cont'd.)

Equipment Identity No.	Description[1]	Division[2]	Rating	Volts	Phase	Amps Full Load	Amps Locked Rotor	Power Source Identity No.
2SWP*SSR4A	Bar rack heater	G	3.15 kW	332	1	10.5	-	2EHS*MCC101
2SWP*SSR5A	Bar rack heater	G	3.15 kW	332	1	10.5	-	2EHS*MCC101
2SWP*SSR6A	Bar rack heater	G	3.15 kW	332	1	10.5	-	2EHS*MCC101
2SWP*STR4A	Strainer service water	G	3 hp	575	3	3.68	23.0	2EHS*MCC101
2SWP*STR4C	Strainer service water	G	3 hp	575	3	3.68	23.0	2EHS*MCC101
2SWP*STR4E	Strainer service water	G	3 hp	575	3	3.68	24.1	2EHS*MCC101
2EJS*PNL101A	Switchgear room A emergency 600-V panel	G	400 A	600	3	150	-	2EHS*MCC102A
2EJS*PNL103A	AB-N emergency 600-V panel	G	400 A	600	3	150	-	2EHS*MCC102A
2EJS*PNL104A	AB-N emergency 600-V panel	G	400 A	600	3	150	-	2EHS*MCC102A
2FWS*MOV21A	Feedwater to reactor	G	26.4 hp	575	3	29.9	297.0	2EHS*MCC102A
2FWS*MOV21B	Feedwater to reactor	G	26.4 hp	575	3	29.9	297.0	2EHS*MCC102C
2GTS*FN1A	SGTS filter train discharge fan	G	40 hp	575	3	38.5	285.0	2EHS*MCC102A
2GTS*MOV1A	Reactor building ventilation mix plenum to grates	G	0.33 hp	575	3	1.68	5.0	2EHS*MCC102A
2GTS*MOV2A	SGTS filter train A inlet	G	2.0 hp	575	3	2.5	-	2EHS*MCC102A
2GTS*MOV3A	SGTS filter train A discharge	G	2.0 hp	575	3	2.5	-	2EHS*MCC102A
2GTS*MOV4B	Decay heat cool to train B	G	1.0 hp	575	3	2.2	12.5	2EHS*MCC302B
2HCS*MOV1A	Wetwell hydrogen recombiner isolation valve	G	0.7 hp	575	3	1.9	10.0	2EHS*MCC102A
2HCS*MOV2A	Wetwell hydrogen recombiner isolation valve	G	0.33 hp	575	3	0.64	4.64	2EHS*MCC102A
2HCS*MOV3A	Wetwell hydrogen recombiner isolation valve	G	0.7 hp	575	3	1.9	10.0	2EHS*MCC102A
2CMS*P2A	H_2/O_2 analyzer pump	G	1.0 hp	575	3	1.70	-	2EHS*MCC102A

TABLE 8.3-4 (Cont'd.)

Equipment Identity No.	Description[1]	Division[2]	Rating	Volts	Phase	Amps Full Load	Amps Locked Rotor	Power Source Identity No.
2DFR*MOV120	Reactor building floor drain discharge isolation valve	G	1.4 hp	575	3	1.75	8.0	2EHS*MCC102C
2DFR*MOV139	Reactor plant floor drain vent isolation valve	G	0.33 hp	575	3	0.64	4.5	2EHS*MCC102C
2ICS*MOV121	Turbine steam supply isolation outboard	G	7.8 hp	575	3	9.10	76.3	2EHS*MCC102C
2ICS*P2	RCIC system pressure pump A	G	10 hp	575	3	10.30	56.2	2EHS*MCC102C
2SLS*MOV1A	Standby liquid control	G	0.33 hp	575	3	0.7	4.8	2EHS*MCC102C
2SLS*MOV5A	SLCS outboard isolation valve	G	0.70 hp	575	3	1.90	10.6	2EHS*MCC102A
2SLS*P1A	Standby liquid pump A	G	40 hp	575	3	38.8	253	2EHS*MCC102C
2WCS*MOV112	RWCU system outboard steam isolation valve	G	7.8 hp	575	3	9.1	76.3	2EHS*MCC102C
2WCS*MOV200	RWCU return isolation valve	G	1.6 hp	575	3	3.20	20.0	2EHS*MCC102A
2CCP*MOV124	Domestic water cooler to RBCLCW outboard I	G	1 hp	575	3	2.2	12.5	2EHS*MCC103A
2CCP*MOV14A	RBCLCW to SFC heat exchanger A	G	1.6 hp	575	3	3.20	20.0	2EHS*MCC103A
2CCP*MOV18A	SFC heat exchanger A to RBCLCW	G	1.6 hp	575	3	3.20	20.00	2EHS*MCC103A
2CCP*MOV265	Isolation valve containment	G	1 hp	575	3	2.2	12.5	2EHS*MCC103A
2CCP*MOV15A	RBCLCW to RCS pump A outboard I	G	0.33 hp	575	3	0.64	4.5	2EHS*MCC103A
2CCP*MOV15B	RBCLCW to RCS pump B outboard I	G	0.33 hp	575	3	0.64	4.5	2EHS*MCC103A
2CCP*MOV17A	To RBCLCW RCS pump A outboard I	G	0.33 hp	575	3	0.64	4.5	2EHS*MCC103A
2CCP*MOV17B	To RBCLCW RCS pump A outboard I	G	0.33 hp	575	3	0.64	4.5	2EHS*MCC103A
2EGA*M1A	DG 1 air comp 1A motor	G	15 hp	575	3	15.80	84.0	2EHS*MCC103A
2EGA*M2A	DG 1 air comp 2A motor	G	15 hp	575	3	15.80	84.0	2EHS*MCC103A
2EGF*P1A	DG 1 fuel oil transfer pump A	G	1.5 hp	575	3	1.82	9.04	2EHS*MCC103A

TABLE 8.3-4 (Cont'd.)

Equipment Identity No.	Description[1]	Division[2]	Rating	Volts	Phase	Amps Full Load	Amps Locked Rotor	Power Source Identity No.
2EGF*P1C	DG 1 fuel oil transfer pump C	G	1.5 hp	575	3	1.76	9.04	2EHS*MCC103A
2EGO*P1A	Lube oil circulation pump	G	15 hp	575	3	14.9	83.5	2EHS*MCC103A
2EGS*P1A	Jacket water circulation pump	G	5 hp	575	3	5.6	34.2	2EHS*MCC103A
2EGT*CH2	Lube oil heater	G	12 kW	575	3	12	-	2EHS*MCC103A
2EGT*CH4	Jacket water heater	G	18 kW	575	3	18	-	2EHS*MCC103A
2HVC*ACU1A	Control room A/C unit 1A	G	40 hp	575	3	39.5	219.0	2EHS*MCC103A
2HVC*ACU2A	Relay room A/C unit 2A	G	40 hp	575	3	39.5	219.0	2EHS*MCC103A
2HVC*ACU3A	Remote shutdown on room A/C unit	G	2 hp	575	3	2.48	16.30	2EHS*MCC103A
2HVC*FN11A	Makeup air switchgear floor	G	7.5 hp	575	3	8.2	48.0	2EHS*MCC103A
2HVC*FN2A	Control room A/C booster fan A	G	10 hp	575	3	10.5	65	2EHS*MCC103A
2HVC*FN4A	Battery room A exchange fan	G	3 hp	575	3	3.7	23.4	2EHS*MCC103A
2HVC*MOV1A	Control room A/C special filter bypass	G	0.25 hp	575	3	0.4	4.5	2EHS*MCC103A
2HVR*CHL1A	Auxiliary oil pump	G	0.75 hp	575	3	0.9	4.83	2EHS*MCC103A
2HVK*P1A	Control building chilled water circulating pump A	G	15 hp	575	3	14.8	94.8	2EHS*MCC103A
2SWP*FV47A	Service water to CWS pumps	G	0.75 hp	575	3	1.0	29.20	2EHS*MCC103A
2SWP*MOV66A	Service water to standby DG coolers E3A	G	1 hp	575	3	2.2	12.8	2EHS*MCC103A
2SWP*MOV67A	Service water to control DG relay room coil	G	0.66 hp	575	3	0.86	4.5	2EHS*MCC103A
2SWP*MOV599	Service water to discharge tunnel isolation	G	1.6 hp	575	3	3.2	20.0	2EHS*MCC103A
2SWP*MOV93A	Service water to discharge tunnel isolation	G	1 hp	575	3	2.20	12.50	2EHS*MCC103A
2SWP*MOV95A	Service water to standby DG coolers	G	1 hp	575	3	2.2	12.5	2EHS*MCC103A

TABLE 8.3-4 (Cont'd.)

Equipment Identity No.	Description[1]	Division[2]	Rating	Volts	Phase	Amps Full Load	Amps Locked Rotor	Power Source Identity No.
2SWP*MOV50B	Service water pump discharge header	Y	9.9 hp	575	3	15.60	104.00	2EHS*MCC301
2SWP*MOV74B	Service water discharge block valve	Y	2.6 hp	575	3	4.7	30.0	2EHS*MCC301
2SWP*MOV74D	Service water pump discharge block valve	Y	2.6 hp	575	3	4.7	30.0	2EHS*MCC301
2SWP*MOV74F	Service water pump discharge block valve	Y	2.6 hp	575	3	4.7	30.0	2EHS*MCC301
2SWP*MOV77B	Motor-operated gate valve	Y	0.7 hp	575	3	1.9	10.0	2EHS*MCC301
2SWP*SSR1B	Bar rack heater	Y	3.15 kW	332	1	10.5	-	2EHS*MCC301
2SWP*SSR2B	Bar rack heater	Y	3.15 kW	332	1	10.5	-	2EHS*MCC301
2SWP*SSR3B	Bar rack heater	Y	3.15 kW	332	1	10.5	-	2EHS*MCC301
2SWP*SSR4B	Bar rack heater	Y	3.15 kW	332	1	10.5	-	2EHS*MCC301
2SWP*SSR5B	Bar rack heater	Y	3.15 kW	332	1	10.5	-	2EHS*MCC301
2SWP*SSR6B	Bar rack heater	Y	3.15 kW	332	1	10.5	-	2EHS*MCC301
2SWP*STR4B	Strainer service water	Y	3 hp	575	3	3.68	23.0	2EHS*MCC301
2SWP*STR4D	Strainer service water	Y	3 hp	575	3	3.68	23.0	2EHS*MCC301
2SWP*STR4F	Strainer service water	Y	3 hp	575	3	3.68	23.0	2EHS*MCC301
2EJS*PNL302B	AB-S emergency 600-V panel	Y	400 A	600	3	150	-	2EHS*MCC302B
2EJS*PNL303B	AB-S emergency 600-V panel	Y	400 A	600	3	150	-	2EHS*MCC302B
2EJS*PNL304B	AB-S emergency 600-V panel	Y	400 A	600	3	150	-	2EHS*MCC302B
2GTS*FN1B	GTS filter train discharge fan	Y	40 hp	575	3	39.20	232.00	2EHS*MCC302B
2GTS*MOV1B	HVP mix plenum to GTS	Y	0.33 hp	575	3	1.68	5.0	2EHS*MCC302B
2CMS*P2B	H_2/O_2 analyzer pump	Y	1 hp	575	3	1.70	-	2EHS*MCC302B

TABLE 8.3-4 (Cont'd.)

Equipment Identity No.	Description[1]	Division[2]	Rating	Volts	Phase	Amps Full Load	Amps Locked Rotor	Power Source Identity No.
2GTS*MOV4A	Decay heat cooler to train A	Y	1.0 hp	575	3	2.2	12.8	2EHS*MCC102A
2HCS*MOV1B	Wetwell hydrogen recombiner isolation valve	Y	0.7 hp	575	3	1.9	10.0	2EHS*MCC302B
2HCS*MOV2B	Wetwell hydrogen recombiner isolation valve	Y	0.33 hp	575	3	0.64	4.64	2EHS*MCC302B
2HCS*MOV3B	Wetwell hydrogen recombiner isolation valve	Y	0.7 hp	575	3	1.9	10.0	2EHS*MCC302B
2HCS*MOV4B	Drywell hydrogen recombiner isolation valve	Y	0.33 hp	575	3	0.64	4.64	2EHS*MCC302B
2HCS*MOV5B	Drywell hydrogen recombiner isolation valve	Y	0.33 hp	575	3	0.64	4.64	2EHS*MCC302B
2HCS*MOV6B	Drywell hydrogen recombiner isolation valve	Y	0.33 hp	575	3	0.64	4.64	2EHS*MCC302B
2SWP*MOV17B	Service water to RBCLCW	Y	1.6 hp	575	3	3.2	20.00	2EHS*MCC302B
2SWP*MOV18B	RBCLCW to service water	Y	1.6 hp	575	3	3.2	20.0	2EHS*MCC302B
2SWP*MOV19B	Service water to RBCLCW heat exchanger	Y	1.0 hp	575	3	2.2	12.5	2EHS*MCC302B
2SLS*MOV5B	SLCS inboard isolation valve	Y	0.70 hp	575	3	1.90	10.00	2EHS*MCC302B
2SWP*MOV21B	RBCLCW to SFC cooling pool	Y	0.33 hp	575	3	0.64	4.5	2EHS*MCC302B
2SWP*MOV33B	RHR heat exchanger B to discharge tunnel	Y	0.83 hp	575	3	3.5	10.3	2EHS*MCC302B
2SWP*MOV90B	RHR heat exchanger inlet	Y	0.83 hp	575	3	3.5	10.3	2EHS*MCC302B
2DER*MOV119	Containment isolation valve	Y	0.66 hp	575	3	0.86	4.5	2EHS*MCC302D
2DER*MOV130	Der TK1 vent	Y	0.33 hp	575	3	0.64	4.5	2EHS*MCC302D
2DFR*MOV121	Drywell floor drain discharge isolation valve	Y	1.4 hp	575	3	1.7	8.0	2EHS*MCC302D

TABLE 8.3-4 (Cont'd.)

Equipment Identity No.	Description[1]	Division[2]	Rating	Volts	Phase	Amps Full Load	Amps Locked Rotor	Power Source Identity No.
2EGT*CH3	Lube oil heater	Y	12 kW	575	3	12	-	2EHS*MCC303B
2EGT*CH5	Jacket water heater	Y	18 kW	575	3	18	-	2EHS*MCC303B
2HVC*ACU1B	Control room A/C unit 1B	Y	40 hp	575	3	39.5	219.0	2EHS*MCC303B
2HVC*ACU2B	Relay room A/C unit 2B	Y	40 hp	575	3	39.5	219.0	2EHS*MCC303B
2HVC*ACU3B	Remote shutdown on room A/C unit	Y	2 hp	575	3	2.48	16.3	2EHS*MCC303B
2HVC*FN11B	Makeup air switchgear floor	Y	7.5 hp	575	3	8.2	48.0	2EHS*MCC303B
2HVC*FN2B	Control room A/C booster fan B	Y	10 hp	575	3	10.5	65.6	2EHS*MCC303B
2HVC*FN4B	Battery room B exchange fan	Y	3 hp	575	3	3.7	23.4	2EHS*MCC303B
2HVC*MOV1B	Control room A/C special filter bypass	Y	0.25 hp	575	3	4.5	28.1	2EHS*MCC303B
2EGA*M1B	DG 3 air comp 1B motor	Y	15 hp	575	3	15.8	84.00	2EHS*MCC303B
2EGA*M2B	DG 3 air comp 2B motor	Y	15 hp	575	3	15.8	84.00	2EHS*MCC303B
2HVK*P1B	Control building chilled water circulating pump B	Y	15 hp	575	3	14.8	94.8	2EHS*MCC303B
2SWP*FV47B	Service water to CWS pumps	Y	0.75 hp	575	3	1.0	29.2	2EHS*MCC303B
2SWP*MOV66B	Service water to standby DG coolers E3B	Y	1 hp	575	3	2.2	12.5	2EHS*MCC303B
2SWP*MOV67B	Service water to cont ground relay room coil	Y	0.66 hp	575	3	0.86	4.5	2EHS*MCC303B
2SWP*MOV93B	Service water to discharge tunnel isolation	Y	1.0 hp	575	3	2.2	12.5	2EHS*MCC303B
2SWP*MOV95B	Service water to standby DG coolers	Y	1 hp	575	3	2.2	12.5	2EHS*MCC303B
2SWP*P2B	Catch basin chiller service water pump B	Y	10 hp	575	3	10.5	63.2	2EHS*MCC303B
2HVP*FN1B	DG 3 exhaust fan 1B	Y	30 hp	575	3	32.0	232.0	2EHS*MCC303D
2HVP*FN1D	DG 3 exhaust fan 1D	Y	30 hp	575	3	32.0	232.0	2EHS*MCC303D
2RHS*FV38B	Test line B to suppression pool	Y	0.33 hp	575	3	0.66	3.8	2EHS*MCC303D

TABLE 8.3-5

DIVISION I STANDBY DIESEL GENERATOR 2EGS*EG1
LOAD SUMMARY

SIMULTANEOUS LOOP AND LOCA, LOCA WITH DELAYED LOOP

	Start KW	Start KVAR	Run KW	Run KVAR	Total KW	Total KVAR
0 <= T < 0.1 sec	9651	43000	0	0	9651	43000
0.1 <= T < 0.9 sec	1741	3160	163	75	1904	3235
0.9 <= T < 2.9 sec	2846	8692	176	75	3022	8767
2.9 <= T < 5.0 sec	1728	3160	898	383	2622	3543
5.0 <= T < 5.5 sec	1834	3444	898	383	2732	3827
5.5 <= T < 6.0 sec	3045	10915	898	383	3943	11298
6.0 <= T < 8.8 sec	1317	7755	1651	744	2968	8499
8.8 <= T < 9.0 sec	106	284	2728	1186	2834	1470
9.0 <= T < 11 sec	117	299	2728	1186	2845	1485
11 <= T < 12 sec	11	15	2771	1213	2782	1228
12 <= T < 15 sec	95	240	2771	1213	2866	1453
15 <= T < 18 sec	84	225	2774	1215	2858	1440
18 <= T < 30 sec	0	0	2807	1234	2807	1234
30 <= T < 32 sec	378	1012	2807	1234	3185	2246
32 <= T < 36 sec	1092	3811	2807	1234	3899	5045
36 <= T < 38 sec	714	2799	2960	1330	3674	4129
38 <= T < 50 sec	0	0	3403	1560	3403	1560
50 <= T < 56 sec	315	843	3403	1560	3718	2403
56 <= T < 70 sec	0	0	3530	1640	3530	1640
70 <= T < 76 sec	714	2799	3530	1640	4244	4439
76 <= T < 98 sec	0	0	3972	1870	3972	1870
98 <= T < 104 sec	86	228	3972	1870	4058	2098

TABLE 8.3-5 (Cont'd.)

SIMULTANEOUS LOOP AND LOCA, LOCA WITH DELAYED LOOP (Cont'd.)

	Start KW	Start KVAR	Run KW	Run KVAR	Total KW	Total KVAR
104 <= T < 2 min	0	0	4007	1891	4007	1891
2 min <= T < 10 min	0	0	3833	1783	3833	1783
10 min <= T < 10.1 min	537	736	3833	1783	4370	2519
10.1 min <= T < 12 min	0	0	3988	1879	3988	1879
12 min <= T < 2 hr	0	0	3856	1797	3856	1797
2 hr <= T < 2 hr 6 sec	590	2018	3856	1797	4446	3815
2 hr 6 sec <= T < 2.5 hr	0	0	4186	1935	4186	1935
T => 2.5 hr	0	0	4306	1935	4306	1935

TABLE 8.3-5 (Cont'd.)

LOOP WITH DELAYED LOCA#

	Start KW	Start KVAR	Run KW	Run KVAR	Total KW	Total KVAR
0 <= T < 0.1 sec	9638	43000	1165	538	10803	43538
0.1 <= T < 5 sec	1741	3160	1341	613	3082	3773
5.0 <= T < 5.5 sec	1834	3444	1341	613	3175	4057
5.5 <= T < 6.0 sec	3045	10915	1341	613	4386	11528
6 <= T < 8.8 sec	1317	7755	2094	974	3411	8729
8.8 <= T < 9 sec	106	284	3171	1417	3277	1701
9.0 <= T < 11 sec	117	299	3171	1417	3288	1716
11 <= T < 12 sec	11	15	3214	1443	3225	1458
12 <= T < 15 sec	95	240	3214	1443	3309	1683
15 <= T < 18 sec	84	225	3217	1445	3301	1670
18 <= T < 30 sec	0	0	3250	1465	3250	1465
30 <= T < 36 sec	378	1012	3250	1465	3628	2477
36 <= T < 50 sec	0	0	3403	1560	3403	1560
50 <= T < 56 sec	315	843	3403	1560	3718	2403
56 <= T < 70 sec	0	0	3530	1640	3530	1640
70 <= T < 76 sec	714	2799	3530	1640	4244	4439
76 <= T < 98 sec	0	0	3972	1870	3972	1870
98 <= T < 104 sec	86	228	3972	1870	4058	2098
104 <= T < 2 min	0	0	3407	1891	4007	1891
2 min <= T < 10 min	0	0	3833	1783	3833	1783
10 min <= T < 10.1 min	537	736	3833	1783	4370	2519
10.1 min <= T < 12 min	0	0	3988	1879	3988	1879
12 min <= T < 2 hr	0	0	3856	1797	3856	1797

TABLE 8.3-5 (Cont'd.)

LOOP WITH DELAYED LOCA#

	Start KW	Start KVAR	Run KW	Run KVAR	Total KW	Total KVAR
2 hr <= T < 2 hr 6 sec	590	2018	3856	1797	4446	3815
2 hr 6 sec <= T < 2.5 hr	0	0	4186	1935	4186	1935
T => 2.5 hr	0	0	4306	1935	4306	1935

TABLE 8.3-5 (Cont'd.)

LOOP WITH UNIT TRIP

	Start KW	Start KVAR	Run KW	Run KVAR	Total KW	Total KVAR
0 <= T < 0.1 sec	9330	42578	0	0	9330	42578
0.1 <= T < 5 sec	1433	2738	176	75	1596	2813
5.0 <= T < 6 sec	1526	3022	176	75	1702	3097
6 <= T < 11 sec	106	284	841	381	947	665
11 <= T < 12 sec	0	0	880	407	880	407
12 <= T < 18 sec	84	225	880	407	964	632
18 <= T < 30 sec	0	0	918	428	918	428
30 <= T < 32 sec	378	1012	918	428	1296	1440
32 <= T < 36 sec	1092	3811	918	428	2010	4239
36 <= T < 38 sec	714	2799	1071	523	1785	3322
38 <= T < 50 sec	0	0	1514	753	1514	753
50 <= T < 56 sec	315	843	1514	753	1829	1596
56 <= T < 70 sec	0	0	1641	833	1641	833
70 <= T < 76 sec	714	2799	1641	833	2355	3632
76 <= T < 2 min	0	0	2083	1064	2083	1064
120 <= T < 10 min	0	0	1992	1007	1992	1007
10 min <= T < 10.1 min	693	943	1992	1007	2685	1950
10.1 min <= T < 12 min	0	0	2190	1131	2190	1131
12 min <= T < 30 min	0	0	2017	1022	2017	1022
30 min <= T < 30.1 min	4	6	2017	1022	2021	1028
30.1 min <= T < 32 min	0	0	2018	1023	2018	1023
32 min <= T < 1 hr	0	0	2017	1022	2017	1022
1 hr <= T < 1 hr 2 sec	1118	5532	2017	1022	3135	6554
1 hr 2 sec <= T < 2 hr	0	0	2739	1329	2739	1329

TABLE 8.3-5 (Cont'd.)

LOOP WITH UNIT TRIP (Cont'd.)

	Start KW	Start KVAR	Run KW	Run KVAR	Total KW	Total KVAR
2 hr <= T < 2 hr 6 sec	590	2018	2739	1329	3329	3347
2 hr 6 sec <= T	0	0	3069	1467	3069	1467

NOTES:

600-V loads (HVAC and other small loads) not loaded at T=0 sec are for system requirements and not diesel loading requirements.

Under the scenario of a LOOP with a subsequent LOCA, the Class 1E loads on the standby diesel generators will be administratively controlled by Unit 2 Station Blackout operating procedures.

* Time, T, is measured from the instant the diesel generator attains its rated voltage and frequency and is connected to its bus by closing the supply breaker 101-1 (2ENS*SWG101).

TABLE 8.3-6

DIVISION II STANDBY DIESEL GENERATOR 2EGS*EG3
LOAD SUMMARY

SIMULTANEOUS LOOP AND LOCA, LOCA WITH DELAYED LOOP

	Start KW	Start KVAR	Run KW	Run KVAR	Total KW	Total KVAR
0 <= T < 0.1 sec	9567	42560	0	0	9567	42560
0.1 <= T < 0.9 sec	1567	2809	141	50	1708	2859
0.9 <= T < 2.9 sec	2672	8341	154	50	2826	8391
2.9 <= T < 5.0 sec	1602	2872	874	358	2476	3230
5.0 <= T < 5.5 sec	2001	3940	874	358	2875	4298
5.5 <= T < 6.0 sec	3119	9472	874	358	3993	9830
6 <= T < 7.5 sec	1565	6663	1558	700	3123	7363
7.5 <= T < 9 sec	447	1131	2278	1008	2725	2139
9 <= T < 11 sec	410	1083	2292	1016	2702	2099
11 <= T < 12 sec	11	15	2454	1117	2465	1132
12 <= T < 14 sec	117	299	2454	1117	2571	1416
14 <= T < 15 sec	128	314	2454	1117	2582	1431
15 <= T < 18 sec	117	299	2457	1119	2574	1418
18 <= T < 20 sec	11	15	2500	1146	2511	1161
20 <= T < 30 sec	0	0	2507	1148	2507	1148
30 <= T < 32 sec	378	1012	2507	1148	2885	2160
32 <= T < 36 sec	1092	3811	2507	1148	3599	4959
36 <= T < 38 sec	714	2799	2657	1244	3371	4043
38 <= T < 70 sec	0	0	3100	1474	3100	1474
70 <= T < 76 sec	714	2799	3100	1474	3814	4273
76 <= T < 98 sec	0	0	3542	1704	3542	1704
98 <= T < 104 sec	86	228	3542	1704	3628	1932

TABLE 8.3-6 (Cont'd.)

SIMULTANEOUS LOOP AND LOCA, LOCA WITH DELAYED LOOP (Cont'd.)

	Start KW	Start KVAR	Run KW	Run KVAR	Total KW	Total KVAR
104 <= T < 120 sec	0	0	3576	1726	3576	1725
120 <= T < 218 sec	0	0	3419	1630	3419	1630
218 <= T < 10 min	0	0	3418	1630	3418	1630
10 min <= T < 10.1 min	240	369	3418	1630	3658	1999
10.1 min <= T < 12 min	0	0	3490	1676	3490	1676
12 min <= T < 1 hr	0	0	3439	1643	3439	1643
1 hr <= T < 1 hr 6 sec	4	6	3439	1643	3443	1649
1 hr 6 sec <= T < 1 hr 2 min	0	0	3440	1643	3440	1643
1 hr 2 min <= T < 2 hr	0	0	3439	1643	3439	1642
2 hr <= T < 2 hr 6 sec	590	2018	3439	1643	4029	3660
2 hr 6 sec <= T < 2.5 hr	0	0	3769	1780	3769	1780
T => 2.5 hr	0	0	3889	1780	3889	1780

TABLE 8.3-6 (Cont'd.)

LOOP WITH DELAYED LOCA#

	Start KW	Start KVAR	Run KW	Run KVAR	Total KW	Total KVAR
0 <= T < 0.1 sec	9567	42560	1165	538	10732	43098
0.1 <= T < 0.9 sec	1567	2809	1306	588	2873	3397
0.9 <= T < 2.9 sec	2672	8341	1311	588	3983	8929
2.9 <= T < 5.0 sec	1602	2872	2033	896	3635	3768
5.0 <= T < 6.0 sec	2001	3940	2033	896	4034	4836
6 <= T < 9 sec	447	1131	2721	1238	3168	2369
9 <= T < 11 sec	410	1083	2735	1246	3145	2329
11 <= T < 12 sec	11	15	2897	1347	2908	1362
12 <= T < 14 sec	117	299	2897	1347	3014	1648
14 <= T < 15 sec	128	314	2897	1347	3025	1661
15 <= T < 18 sec	117	299	2900	1349	3017	1648
18 <= T < 20 sec	11	15	2943	1376	2954	1391
20 <= T < 30 sec	0	0	2946	1378	2946	1378
30 <= T < 36 sec	378	1012	2946	1378	3324	2390
36 <= T < 70 sec	0	0	3099	1474	3099	1474
70 <= T < 76 sec	714	2799	3099	1474	3813	4273
76 <= T < 98 sec	0	0	3542	1704	3542	1704
98 <= T < 104 sec	86	228	3542	1704	3628	1932
104 <= T < 120 sec	0	0	3576	1725	3576	1725
120 <= T < 218 sec	0	0	3419	1630	3419	1630
218 <= T < 10 min	0	0	3418	1630	3418	1630
10 min <= T < 10.1 min	240	369	3418	1630	3658	1999
10.1 min <= T < 12 min	0	0	3490	1676	3490	1676
12 min <= T < 1 hr	0	0	3439	1643	3439	1943

TABLE 8.3-6 (Cont'd.)

LOOP WITH DELAYED LOCA# (Cont'd.)

	Start KW	Start KVAR	Run KW	Run KVAR	Total KW	Total KVAR
1 hr <= T < 1 hr 6 sec	4	6	3439	1643	3443	1649
1 hr 6 sec <= T < 1 hr 2 min	0	0	3440	1643	3440	1643
1 hr 2 min <= T < 2 hr	0	0	3439	1642	3439	1642
2 hr <= T < 2 hr 6 sec	590	2018	3439	1642	4029	3660
2 hr 6 sec <= T < 2.5 hr	0	0	3769	1780	3769	1780
T => 2.5 hr	0	0	3889	1780	3889	1780

TABLE 8.3-6 (Cont'd.)

LOOP WITH UNIT TRIP

	Start KW	Start KVAR	Run KW	Run KVAR	Total KW	Total KVAR
0 <= T < 0.1 sec	9267	42159	0	0	9267	42159
0.1 <= T < 5 sec	1267	2408	154	50	1421	2458
5 <= T < 6 sec	1666	3476	154	50	1820	3526
6 <= T < 11 sec	399	1068	748	338	1147	1406
11 <= T < 12 sec	0	0	910	439	910	439
12 <= T < 18 sec	106	284	910	439	1016	723
18 <= T < 30 sec	0	0	953	466	953	466
30 <= T < 32 sec	378	1012	953	466	1331	1478
32 <= T < 36 sec	1092	3811	953	466	2045	4277
36 <= T < 38 sec	714	2799	1106	562	1820	3361
38 <= T < 70 sec	0	0	1549	792	1549	792
70 <= T < 76 sec	714	2799	1549	792	2263	3591
76 <= T < 2 min	0	0	1992	1022	1992	1022
120 <= T < 10 min	0	0	1917	978	1917	978
10 min <= T < 10.1 min	386	562	1917	978	2303	1540
10.1 min <= T < 12 min	0	0	2031	1050	2031	1050
12 min <= T < 1 hr	0	0	1942	995	1942	995
1 hr <= T < 1 hr 2 sec	1118	5532	1942	995	3060	6527
1 hr 2 sec <= T < 1 hr 6 sec	4	6	2665	1303	2669	1309
1 hr 6 sec <= T < 1 hr 2 min	0	0	2665	1303	2665	1303
1 hr 2 min <= T < 2 hr	0	0	2665	1303	2665	1306
2 hr <= T < 2 hr 6 sec	590	2018	2665	1303	3255	3321
2 hr 6 sec <= T	0	0	2995	1441	2995	1441

TABLE 8.3-6 (Cont'd.)

NOTES:

Power supply to the panel 2LAS-PNL400 can be connected temporarily, for the outage duration, from 2NJS-US4 to 2NJS-US6. Reference Procedure N2-PM-@029, Safety Evaluation #96-080.

600-V loads (HVAC and other small loads) not loaded at T=0 sec are for system requirements and not diesel loading requirements.

Under the scenario of a LOOP with a subsequent LOCA, the Class 1E loads on the standby diesel generators will be administratively controlled by NMP2 Station Blackout operating procedures.

* Time, T, is measured from the instant the diesel generator attains its rated voltage and frequency and is connected to its bus by closing the supply breaker 103-14 (2ENS*SWG103).

CHAPTER 9

TABLE OF CONTENTS (Cont'd.)

Section	Title	Page
9.2.5.2.1	Intake System	9.2-28
9.2.5.2.2	Discharge System	9.2-30
9.2.5.2.3	Fish Bypass System	9.2-31
9.2.5.2.4	Tempering System	9.2-31
9.2.5.3	Safety Evaluation	9.2-32
9.2.5.3.1	Compliance with Regulatory Guide 1.27	9.2-32
9.2.5.3.2	Recirculation of Effluents	9.2-35
9.2.5.3.3	Effect of Failure of the St. Lawrence Power Project on Low Lake Levels	9.2-37
9.2.5.3.4	Evaluation of Effects of Transportation Accidents on Operation of the Ultimate Heat Sink	9.2-39
9.2.5.3.5	Evaluation of Effects of Accidental Releases of Oil on the Intake Structure	9.2-39
9.2.5.4	Inspection and Testing Requirements	9.2-39
9.2.5.5	Instrumentation Requirements	9.2-39
9.2.6	Condensate Storage Facilities	9.2-41
9.2.6.1	Design Bases	9.2-41
9.2.6.1.1	Safety Design Bases	9.2-41
9.2.6.1.2	Power Generation Design Bases	9.2-41
9.2.6.2	System Description	9.2-42
9.2.6.3	Safety Evaluation	9.2-43
9.2.6.4	Test and Inspection	9.2-44
9.2.6.5	Instrumentation Requirements	9.2-44
9.2.7	Turbine Building Closed Loop Cooling Water System	9.2-45
9.2.7.1	Design Bases	9.2-45
9.2.7.1.1	Safety Design Bases	9.2-45
9.2.7.1.2	Power Generation Design Bases	9.2-45
9.2.7.2	System Description	9.2-46
9.2.7.3	Safety Evaluation	9.2-46
9.2.7.4	Testing and Inspection Requirements	9.2-46
9.2.7.5	Instrumentation Requirements	9.2-47
9.2.8	References	9.2-48
9.3	PROCESS AUXILIARIES	9.3-1
9.3.1	Compressed Air Systems	9.3-1
9.3.1.1	Instrument Air System	9.3-1
9.3.1.1.1	Design Bases	9.3-1
9.3.1.1.2	System Description	9.3-2
9.3.1.1.3	Safety Evaluation	9.3-3
9.3.1.1.4	Inspection and Testing Requirements	9.3-4
9.3.1.1.5	Instrumentation Requirements	9.3-4
9.3.1.2	Service Air System	9.3-5

CHAPTER 9

TABLE OF CONTENTS (Cont'd.)

Section	Title	Page
9.3.1.2.1	Design Bases	9.3-5
9.3.1.2.2	System Description	9.3-6
9.3.1.2.3	Safety Evaluation	9.3-6
9.3.1.2.4	Inspection and Testing Requirements	9.3-6
9.3.1.2.5	Instrumentation Requirements	9.3-6
9.3.1.3	Breathing Air System	9.3-7
9.3.1.3.1	Design Bases	9.3-7
9.3.1.3.2	System Description	9.3-7
9.3.1.3.3	Safety Evaluation	9.3-8
9.3.1.3.4	Testing and Inspection	9.3-8
9.3.1.3.5	Instrumentation Requirements	9.3-8
9.3.1.4	Automatic Depressurization System	9.3-9
9.3.1.4.1	Design Bases	9.3-9
9.3.1.4.2	System Description	9.3-10
9.3.1.4.3	Safety Evaluation	9.3-11
9.3.1.4.4	Inspection and Testing Requirements	9.3-11
9.3.1.4.5	Instrumentation Requirements	9.3-12
9.3.1.5	Instrument Nitrogen System	9.3-14
9.3.1.5.1	Design Bases	9.3-14
9.3.1.5.2	System Description	9.3-15
9.3.1.5.3	Safety Evaluation	9.3-16
9.3.1.5.4	Inspection and Testing Requirements	9.3-17
9.3.1.5.5	Instrumentation Requirements	9.3-17
9.3.2	Process and Post-accident Sampling Systems	9.3-18
9.3.2.1	Design Bases	9.3-18
9.3.2.2	System Description	9.3-19
9.3.2.3	Safety Evaluation	9.3-21
9.3.2.4	Inspection and Testing Requirements	9.3-21
9.3.2.5	Instrumentation Requirements	9.3-21
9.3.2.5.1	Reactor Plant Sample System	9.3-21
9.3.2.5.2	Turbine Plant Sample System	9.3-22
9.3.2.5.3	Radwaste Sample System	9.3-23
9.3.3	Equipment and Floor Drain Systems	9.3-24
9.3.3.1	Design Basis	9.3-24
9.3.3.2	System Description	9.3-27
9.3.3.3	Safety Evaluation	9.3-28
9.3.3.4	Testing and Inspection Requirements	9.3-29
9.3.3.5	Instrumentation Requirements	9.3-29
9.3.4	Not Applicable	9.3-33
9.3.5	Standby Liquid Control System	9.3-33
9.3.5.1	Design Bases	9.3-33
9.3.5.2	System Description	9.3-34
9.3.5.3	Safety Evaluation	9.3-36
9.3.5.4	Testing and Inspection Requirements	9.3-38
9.3.5.5	Instrumentation Requirements	9.3-39

CHAPTER 9

LIST OF TABLES (Cont'd.)

Table Number	Title
9.3-3	SLCS COMPONENT MATERIAL AND SPECIFICATIONS
9.4-1	ENVIRONMENTAL AND SYSTEM DESIGN PARAMETERS FOR HVAC SYSTEMS
9.4-2	DESIGN DATA OF PRINCIPAL EQUIPMENT - CONTROL BUILDING AND NORMAL SWITCHGEAR BUILDING HVAC SYSTEMS (HISTORICAL)
9.4-3	DESIGN DATA OF PRINCIPAL EQUIPMENT - REACTOR BUILDING HVAC SYSTEM (HISTORICAL)
9.4-4	DESIGN DATA OF PRINCIPAL EQUIPMENT - RADWASTE BUILDING HVAC SYSTEM (HISTORICAL)
9.4-5	DATA OF PRINCIPAL EQUIPMENT - TURBINE BUILDING HVAC SYSTEM (HISTORICAL)
9.4-6	DESIGN DATA OF PRINCIPAL EQUIPMENT - SERVICE BUILDING HEATING AND VENTILATING SYSTEM (HISTORICAL)
9.4-7	DESIGN DATA OF PRINCIPAL EQUIPMENT - DIESEL GENERATOR BUILDING HVAC SYSTEM (HISTORICAL)
9.4-8	DESIGN DATA OF PRINCIPAL EQUIPMENT - MISCELLANEOUS BUILDINGS HVAC SYSTEMS (HISTORICAL)
9.4-9	DESIGN DATA OF PRINCIPAL EQUIPMENT - AUXILIARY BOILER BUILDING HEATING AND VENTILATING SYSTEM (HISTORICAL)
9.4-10	DESIGN DATA OF PRINCIPAL EQUIPMENT - AUXILIARY SERVICE BUILDING HVAC SYSTEM (HISTORICAL)
9.4-11	DESIGN DATA OF PRINCIPAL EQUIPMENT - PLANT CHILLED WATER SYSTEM (HISTORICAL)
9.4-12	DESIGN DATA FOR THE PLANT GLYCOL AND HOT WATER HEATING SYSTEMS (HISTORICAL)
9.5-1	LIGHTING SYSTEM POWER SOURCE, PERCENTAGE, AND TYPE OF DISTRIBUTION
9.5-2	LIGHTING SYSTEM FIXTURE TYPE AND LIGHTING INTENSITY

CHAPTER 9

LIST OF TABLES (Cont'd.)

Table Number	Title
9.5-3	DEVIATIONS FROM NFPA STANDARDS
9.5-3a	DEVIATION TO NFPA STANDARD 14-3-2.1

CHAPTER 9

LIST OF FIGURES (Cont'd.)

Figure Number	Title
9.4-7	CONTROL BUILDING HVAC SYSTEM - MISCELLANEOUS ROOMS AND AREAS LOGIC DIAGRAM (SHEETS 1 THROUGH 14)
9.4-8	REACTOR BUILDING VENTILATION AND CATEGORY I AREA COOLERS, DRYWELL COOLING, PRIMARY CONTAINMENT PURGE AND STANDBY GAS TREATMENT (SHEETS A THROUGH M)
9.4-9	REACTOR BUILDING HVAC SYSTEM LOGIC DIAGRAM (SHEETS 1 THROUGH 26)
9.4-10	RADWASTE BUILDING VENTILATION (SHEETS A THROUGH E)
9.4-11	RADWASTE BUILDING HVAC SYSTEM LOGIC DIAGRAM (SHEETS 1 THROUGH 17)
9.4-12	TURBINE BUILDING VENTILATION (SHEETS A THROUGH D)
9.4-13	TURBINE BUILDING HVAC SYSTEM LOGIC DIAGRAM (SHEETS 1 THROUGH 12)
9.4-14	SERVICE BUILDING HEATING AND VENTILATING SYSTEM LOGIC DIAGRAM (SHEETS 1 THROUGH 3)
9.4-15a	DIESEL GENERATOR BUILDING HVAC SYSTEM
9.4-16	DIESEL GENERATION BUILDING HVAC SYSTEM LOGIC DIAGRAM (SHEETS 1 THROUGH 9)
9.4-17	MISCELLANEOUS BUILDINGS HVAC SYSTEMS LOGIC DIAGRAM (SHEETS 1 THROUGH 13)
9.4-18	AUXILIARY BOILER ROOM HEATING AND VENTILATING SYSTEM LOGIC DIAGRAM (SHEETS 1 THROUGH 4)
9.4-19	AUXILIARY SERVICE BUILDING HVAC SYSTEM LOGIC DIAGRAM (SHEETS 1 THROUGH 3)
9.4-20	CONTROL BUILDING CHILLED WATER SYSTEM LOGIC DIAGRAM (SHEETS 1 THROUGH 5)
9.4-21	VENTILATION CHILLED WATER SYSTEM LOGIC DIAGRAM (SHEETS 1 THROUGH 4)
9.4-22	PLANT HOT WATER HEATING AND GLYCOL HEATING SYSTEMS (SHEETS A THROUGH E)

CHAPTER 9

LIST OF FIGURES (Cont'd.)

Figure Number	Title
9.4-23	PLANT HEATING SYSTEM - HOT WATER HEATING LOGIC DIAGRAM (SHEETS 1 THROUGH 7)
9.5-1	FIRE PROTECTION WATER SYSTEM (SHEETS A THROUGH H)
9.5-2	FIRE PROTECTION FOAM (SHEETS A AND B)
9.5-3	FIRE PROTECTION CO_2 SYSTEM (SHEETS A THROUGH C)
9.5-4a	FIRE PROTECTION HALON SYSTEM
9.5-5	COMMUNICATIONS PLAN NORMAL STANDBY & HPCS SWITCHGEAR ROOMS (SHEETS 1 AND 2)
9.5-6	COMMUNICATIONS PLAN CONTROL BUILDING RELAY & COMPUTER ROOM EL 288'-0"
9.5-7	COMMUNICATIONS PLAN MAIN CONTROL ROOM EL 306'-0"
9.5-8	COMMUNICATION PLAN TURBINE BUILDING EL 250'-0" (SHEETS 1 AND 2)
9.5-9	COMMUNICATION PLAN TURBINE BUILDING EL 277'-0" (SHEETS 1 AND 2)
9.5-10	COMMUNICATION PLAN TURBINE BUILDING EL 306'-0" (SHEETS 1 AND 2)
9.5-11	COMMUNICATION PLAN REACTOR BUILDING EL 175'-0"
9.5-12	COMMUNICATION PLAN REACTOR BUILDING EL 196'-0"
9.5-13	COMMUNICATION PLAN REACTOR BUILDING EL 215'-0"
9.5-14	COMMUNICATION PLAN REACTOR BUILDING EL 240'-0"
9.5-15	COMMUNICATION PLAN REACTOR BUILDING EL 261'-0"
9.5-16	COMMUNICATION PLAN REACTOR BUILDING EL 289'-0"
9.5-17	COMMUNICATION PLAN REACTOR BUILDING EL 306'-0"
9.5-18	COMMUNICATIONS PLAN REACTOR BUILDING EL 328'-10"
9.5-19	COMMUNICATION PLAN REACTOR BUILDING EL 353'-10"

effectively contained vertically by a bar at the bottom of the poison. This bar is welded to one of the adjacent box walls. It is equal or slightly less thick than the poison sheet. Between adjacent racks at the east-west interface, poison sheets are held in place on one of the two adjacent box walls by a 0.031-in thick sheet of stainless steel which is welded to the box wall. Poison installation throughout the design is vented.

No poison material is provided in the north-south interface between racks and on the periphery of the rack array. At the north-south interface a 2 3/4-in minimum water gap, instead of poison, is provided. It is maintained by spacer blocks welded to both adjacent racks. The periphery of the rack array is provided with 2 3/4-in minimum standoffs, where needed, welded to the sides of the racks. They prevent any fuel assembly from being placed closer to the stored fuel than is criticality safe.

The neutron poison material is Boraflex, a silicon polymer containing uniformly distributed B_4C which contains a minimum B^{10} loading of 0.028 g/cm^2. Extensive testing of this material has proven that there is no significant deterioration of the material when subjected to $1x10^{11}$ rads gamma, in a water environment, which is in excess of that which the material will be subjected to in the spent fuel pool. The material is controlled through an extensive QA program which ensures that it is the proper material with the correct composition and the correct amount of B^{10}. Visual examination of the finished rack provides the assurance that all poison sheets are in place. The Boraflex Poison Surveillance Program is an accelerated test of the ability of the poison material to withstand high-energy radiation in the spent fuel storage pool. This program consists of two special surveillance assemblies which contain coupons made from Boraflex obtained from the original lots for the Nine Mile Point Nuclear Station - Unit 2 (Unit 2) production. One assembly contains 13 small coupons (5 1/4 in x 10 in) each attached to the surveillance assembly with a coverplate and two bolts. The other assembly houses a full-size (5 1/4 in x 138 1/2 in) sheet of Boraflex attached to the assembly with a stainless steel coverplate and eight bolts. The method of retention is similar to the Boraflex retained in the Unit 2 spent fuel racks.

Both surveillance assemblies are to be located in the spent fuel pool such that eight freshly discharged fuel assemblies from each discharge batch of fuel are positioned in the eight closest adjacent storage cells after each refueling outage. The fuel assemblies selected for placement in these eight closest locations will be the highest powered bundles that are being discharged. By placing freshly discharged fuel next to this assembly, the rate at which the coupons accumulate exposure to gamma radiation is accelerated relative to the average rate at which the Boraflex in the spent fuel racks accumulates gamma radiation exposure.

Periodically, short coupons are to be removed from the surveillance assembly and subjected to laboratory testing and examination for changes in physical properties. At a different frequency, the assembly housing the full-length coupon is to be removed from the spent fuel pool and the coverplate removed for inspection of the Boraflex. The frequency for coupon removal/inspection has been established to assure that any unanticipated changes in properties of Boraflex will be evident from the testing or inspection of the coupons.

All coupons were tested prior to the fourth refueling outage. Future testing/inspection of the short-length coupons will be conducted on a schedule keyed to refueling outages at Unit 2. Short-length coupons were tested prior to the sixth and seventh refueling outages. A single short-length coupon will be removed from the surveillance assembly for physical testing at a qualified laboratory prior to each refueling outage from this point forward. The values for the test sample are compared to its original values and an unirradiated control sample. Neutron transmissibility testing will be performed and documented. The full-length panel shall be inspected once every 5 yr, except if any of the short-length coupons fail to meet the acceptance criteria. Should any of the short-length coupons fail to meet the acceptance criteria, the full-length coupon will be inspected, even if less than 5 yr has elapsed since its last inspection.

Each storage cell has a welded-in bottom plate with a tapered central hole that supports the stored fuel assembly. The fuel assembly is positioned in this hole which provides for water flow through and around the stored fuel assembly.

The fuel storage racks are freestanding in the spent fuel storage pool. At least four screw-type adjustable pedestals are provided on the bottom of each rack to support it to the floor and provide adequate space beneath for coolant water flow. The pedestals are adjustable for leveling purposes.

The fully-loaded array of stored fuel assemblies is calculated to maintain $K_{eff} \leq 0.95$ assuming the pool to be filled with nonborated water at 68°F. The geometric array is considered as the worst possible for these calculations, when considering mechanical tolerances and abnormal conditions. The racks are designed to maintain the subcritical array when subjected to the maximum earthquake conditions and dropped load accident conditions.

All nonsafety-related systems in the vicinity of the spent fuel storage facility are seismically supported and, therefore, will not fail and cause an increase in K_{eff} beyond the allowable.

The 8x8 and 9x9 criticality analysis is performed with the MERIT code package. The additional 9x9 and 10x10 analysis is performed with the KENO/CASMO code package. These codes have been

benchmarked against critical experiments in the range of pellet diameters, water-to-fuel ratios, and enrichments that encompass the Unit 2 design. This benchmarking demonstrates that the calculation model is capable of determining the multiplication factor within 1 percent reactivity change at the 95 percent confidence level. Calculations for the effect of Boraflex neutron-absorbing material have been included using fundamental techniques that have been successfully applied in the past to thin heavily-absorbing mediums.

The effects of various mechanical and thermal uncertainties have been analyzed. These included pool water temperature, placement of assemblies in storage cells, stainless steel and poison thickness variations, and UO_2 pellet density.

The basic cell geometry is shown on Figure 9.1-4. The reactivity of the basic cell is a function of B^{10} loading in the Boraflex. The B^{10} loading used for the criticality analysis is the minimum to be incorporated into the design and corresponds to 0.028 grams of B^{10} per square centimeter of cross-sectional area. The initial 8x8 and 9x9 analysis (Reference 3) used a nominal Boraflex thickness of 0.106 in. The thickness tolerance of +0.010 is addressed as one of the perturbations to the multiplication factor of the basic cell. The additional analysis for 9x9 and 10x10 fuel used a minimum Boraflex thickness of 0.096 in without a thickness tolerance perturbation.

The reactivity perturbation effect of the Zircaloy fuel channel around the bundle when located in the spent fuel rack is positive. As an added conservatism, the assumption is made that all fuel assemblies are stored with channels.

All reactivity perturbation effects are included in the criticality analysis. The final result, excluding accident, Boraflex shrinkage/gaps, and dissolution effects, shows that the worst-case multiplication factor $K\infty \leq 0.9137$.

The racks, on their pedestals, provide adequate space underneath for relatively unrestricted coolant water flow. The holes in the cell bottom plate allow sufficient flow through and around each fuel assembly.

The spent fuel pool is cooled by the spent fuel pool cooling and cleanup (SFC) system (Section 9.1.3).

9.1.2.3 Safety Evaluation

The design of the spent fuel storage racks provides for a subcritical effective multiplication factor K_{eff} less than 0.95 for both normal and abnormal storage conditions.

Normal conditions exist when the fuel storage racks are located in the pool and are covered with a normal depth of water (approximately 23 ft above the top of stored fuel), and with the

fuel assemblies in their design storage positions. The spent fuel is sufficiently covered with water to meet the radiation zone requirements in Section 12.3 under this condition. The spent fuel pool is designed to prevent any inadvertent drainage and/or siphoning of water. There are no permanent drains in the spent fuel pool.

The reactor cavity and internals storage pools contain piping which, were it to leak, could result in loss of water from the spent fuel pool during refueling. However, the leakage rate from a crack in these low-pressure (moderate energy) lines would be slow. Sufficient time would be available for the plant Operators to initiate makeup water and stop the leak prior to any significant decrease in the spent fuel pool level.

An abnormal condition may result from accidental dropping of equipment or damage caused by the horizontal movement of fuel handling equipment without first disengaging the fuel from the hoisting equipment. To ensure that the design criteria are met, the following normal and abnormal spent fuel storage conditions are analyzed:

1. Normal positioning in the spent fuel storage array.
2. Eccentric positioning in the spent fuel storage array.
3. Pool water temperature increases to 212°F.
4. Normal storage array of ruptured fuel.
5. Moving fuel bundle between work area rack and storage area.

The spent fuel storage racks are designed to meet Category I requirements (Section 9.1.2.2). The maximum uplift forces that can be developed by the fuel grapple hoist of the refueling platform, the auxiliary hoist of the refueling platform, or the refueling jib cranes, do not exceed the weight of an empty spent fuel storage rack.

The storage rack structure is assessed to withstand the impact resulting from a falling weight possessing 13,545 ft-lb of kinetic energy. When subjected to this impact, those members that maintain spacing to ensure $k_{eff} \leq 0.95$ remain intact. The fuel handling accident evaluation (Section 15.1) is based on the dropping of a raised fuel assembly onto the top of the core. Since the fuel assembly density in the core exceeds that in the spent fuel pool, the accident evaluation in Section 15.7.4 bounds the conditions that could result from a fuel assembly dropping in the spent fuel pool.

The spent fuel storage racks are made of Type 304 stainless steel. Materials used for construction are specified in accordance with the latest issue of applicable ASTM

could be reached after 1 hr even if located in the secondary containment break area. Plant operating procedures describe how to utilize the cross-connect capability of the SFC system. These crossties permit each SFC pump to take suction from either skimmer surge tank and to discharge back to the fuel pool through either heat exchanger. Figure 9.1-5 shows the SFC system and the cross-connect capability.

For the full-core offload condition, with the spent fuel pool isolated from the reactor cavity (Case 2), described in Section 9.1.3.2, two trains of SFC will maintain the spent fuel pool temperature at or below 125°F. Should one loop of SFC be lost under this condition, it would take approximately 2 hr for the temperature of the spent fuel pool to approach its maximum design temperature of 150°F. This 2-hr duration includes taking credit for heat loss from the surface of the spent fuel pool by evaporation. Two hr is a sufficient amount of time for SFC to be restored under this condition. All that is required to restore spent fuel pool cooling in this situation is to start one loop of the RHR system (SFC assist mode) or one loop of ADH, whichever is available.

In addition to the redundancy provided in the SFC system, it is possible to remove more heat than the design heat removal capabilities of the heat exchangers by virtue of cooling with service water instead of RBCLCW due to the lower service water temperature.

The SFC system, in combination with natural circulation, is capable of providing an alternate method of decay heat removal and circulation of reactor coolant when the plant is in the refueling mode. This requires a portion of the SFC return flow to be directed to the reactor cavity spargers and a portion of the fuel to remain in the vessel. Other restrictions apply to this use of SFC, such as time after shutdown, cooling water temperature available to the heat exchangers, and reactor power level at time of shutdown.

During refueling outages when the spent fuel pool is open to the reactor cavity, spent fuel pool cooling is performed in conjunction with reactor cavity cooling. Operation in this mode is administratively controlled. Cavity cooling is not designed for single-active failure. SFC is required to meet single failure requirements. For the worst-case heat load conditions during refueling (54.9×10^6 Btu/hr, 96 hr after shutdown from 100-percent power operation), either one RHR shutdown cooling loop in conjunction with one SFC loop, or one ADH loop in conjunction with one SFC loop, would maintain the spent fuel pool temperature below 125°F and the reactor coolant temperature below 140°F. The other SFC would be maintained available. If one operating loop of either SFC or the shutdown cooling loop (i.e., ADH or RHR) is lost, it would take a minimum of 2 hr before the spent fuel pool temperature or the reactor coolant temperature

approaches 140°F. Under normal conditions, 2 hr is sufficient time to place the idle available system into service.

Since the SWP system is always available and provisions are included to use service water as makeup water for the spent fuel pool, adequate water coverage of spent fuel in the spent fuel pool is assured at all times. Design features of the SFC system also include siphon breakers in the SFC return lines to preclude the potential for pool drainage from a broken line.

Due to the time available for required Operator actions following a faulted (i.e., line break) condition and the redundancy of the SFC system, spent fuel pool cooling is assured for any single-active or passive failure. Therefore, the integrity of the spent fuel pool can be maintained.

Originally, the failure modes and effects analysis (FMEA) of the SFC system was contained in the Unit 2 FMEA document, which is historical. FMEAs for plant systems are now performed and controlled by the design process.

During refueling outages, the SFC system is capable of maintaining the average reactor core coolant temperature below 140°F, in the event the ADH removal system is lost and RHR is out of service for maintenance. Under the maximum heat load conditions of 54.9×10^6 Btu/hr described in Section 9.1.6, two trains of SFC with 77°F cooling water will achieve the required core coolant temperatures provided the SFC trains are placed into service before the pools heat up to surface temperature of 131°F. A minimum of 4 hr are available to place SFC in service following loss of the ADH removal system during spring and fall outages when outdoor wet-bulb temperatures are 64°F or less. During summer outages, when the wet-bulb temperature is 74°F (design), ADH will maintain the pool at a higher temperature and, therefore, the time available before the pool heats up to 131°F is reduced to a minimum of 2 hr. These durations do not include taking credit for the loss from the surface of the pools by evaporation and convection. These durations are also based on worst-case conditions, including a heat load of 54.9×10^6 Btu/hr, which corresponds to a filled spent fuel pool heat load and core heat load after shutdown from 100-percent reactor uprated power.

9.1.3.4 Inspection and Testing

No special equipment tests are required because at least one pump of each system, one heat exchanger, and one filter/demineralizer are normally in continuous operation while fuel is stored in the pool. Operating and standby components are alternated periodically to verify operability of all equipment. Routine visual inspection of the system components and instrumentation is adequate to verify system operability. The spent fuel storage pool level alarms are periodically tested. Isolation valves are

also tested on a periodic basis, when the respective system is not operating, to ensure their operability.

THIS PAGE INTENTIONALLY BLANK

The head strongback carousel (Figure 9.1-27) is used for suspending the stud tensioners and for lifting the pressure vessel head. The head strongback carousel has dual-load attaching points providing a redundant lifting design.

The strongback is designed to support three times the rated load (static and dynamic) in accordance with NUREG-0554. All welding is in accordance with the ASME Boiler and Pressure Vessel Code Section IX. The completed assembly is proof tested at 125 percent rated load. After the load test, all structural welds are magnetic particle inspected.

Lifting Slings and Strongbacks

Three types of lifting devices will be used to lift and transport critical loads during refueling:

1. Solid bar slings in conjunction with the primary and redundant strongbacks (Figure 9.1-19).

2. Wire rope slings attached directly to the polar crane main hook (Figure 9.1-19a).

3. Kevlar slings attached directly to the polar crane main hook (Figure 9.1-19a).

Each pair of slings and strongbacks are designed to withstand three times the rated load without any permanent deformation. The slings are designed to withstand the rated load without exceeding 20 percent of the material tensile stress allowables.

A complete set of four slings, either solid bar, wire rope, or Kevlar, will be used when lifting and transporting the shield plugs, drywell head, reactor vessel head insulation frame, RPV head, fuel transfer shielding bridge, SFC and reactor water cleanup (WCS) filter removal plugs, storage pool gate, service platform, and other critical loads identified in Appendix 9C, Figure 5-2.

A separator sling set and lifting rig consisting of four wire rope or solid bar slings and two spreader beams will be used when lifting the dryer and separator (Figures 9.1-20 and 9.1-20a). The dryer/separator sling assembly (Figure 9.1-20a) which utilizes Kevlar slings and a strongback may also be used to handle the dryer and separator. These slings (i.e., wire rope, solid bar, or Kevlar) and spreader beams/strongback are designed for underwater service. The spreader beams/strongbacks are designed to the same criteria as the slings.

Each completed sling assembly (solid bar, wire rope or Kevlar) and the spreader beam/strongback are proof tested at 150 percent of the rated load. All welds after load testing are subjected to nondestructive testing (NDT) inspection.

During use, slings and lifting rigs shall be maintained in accordance with ANSI 14.6-1978.

Service Platform

The service platform (Figure 9.1-21) is provided to facilitate maintenance work on reactor internals. It provides a working platform for people and hand-guided tools, and it also can support a jib crane. The service platform is supported by four wheels that run on a circular track resting on the vessel flange and confined by the vessel closure studs.

The physical size of the device is such that it cannot enter the RPV. The structure design is in accordance with the AISC Manual of Steel Construction. Materials are in accordance with ASTM Standards. Welding is in accordance with ASME Boiler and Pressure Vessel Code Section IX or AWS D1.1 structural welding. The electrical system is in accordance with ANSI/ANS C1, National Electrical Code, and NEMA Publications No. IC1 and MG1. Painting and surface preparation are in conformance with SSPC and RG 1.54.

Service Platform Support

The service platform support serves both as a sealing surface protector for the reactor vessel flange and as a track for the service platform. It has continuous vertical support on the vessel flange, and horizontally it is confined by the vessel studs by strapping to the outer edge of the flange. The service platform support is made from aluminum and all welding is done in accordance with AWS Code D1.0.

Service Pole Caddy System

The service pole caddy system is an auxiliary platform attached to the refueling platform. It is used to carry service poles to desired locations over the reactor cavity to perform underwater servicing activities on reactor equipment, such as shroud head bolts removal and installation, steam line plugs installation and removal, and underwater camera manipulation.

Steam Line Plug Installation Tool

The steam line plugs are designed to be installed using the installation tool under water from the refuel bridge. The installation tool is used for transporting and installing the steam line plugs in the steam line nozzles of the reactor vessel. This tool is made of aluminum; it is designed for a safety factor of 5, and is in accordance with Aluminum Construction Manual.

9.1.4.2.6 In-Vessel Servicing Equipment

The instrument strongback attached to the RBPC auxiliary hoist is used for servicing the local power range monitor (LPRM), source range monitor (SRM), and intermediate range monitor (IRM) dry

tubes should they require replacement. The strongback initially supports the dry tube into the vessel. The in-core dry tube is then decoupled from the strongback and is guided into place while being supported by the instrument handling tool (Figure 9.1-22).

Final in-core insertion is accomplished from below the reactor vessel. The instrument handling tool is attached to the refueling platform auxiliary hoist and is used for removing and installing LPRM fixed in-core dry tubes as well as handling the SRM and IRM dry tubes.

Each in-core instrumentation guide tube is sealed by an O-ring on the flange. In case the seal needs replacing, an in-core guide tube sealing tool is provided. The tool is inserted into an empty guide tube and sits on the beveled guide tube entry in the vessel. When the drain on the water seal cap is opened, hydrostatic pressure seats the tool. The flange can then be removed for seal replacement.

The auxiliary hoist on the refueling platform is used with appropriate grapples to handle control rods, flux monitor dry tubes, sources, and other internals of the reactor. Interlocks on both the grapple hoists and auxiliary hoist are provided for safety purposes; the refueling interlocks are described and evaluated in Section 7.7.1.13.

9.1.4.2.7 Refueling Equipment

Fuel movement and reactor servicing operations are performed from a platform that spans the refueling, servicing, and storage cavities.

Refueling Platform

The refueling platform (Figure 9.1-7) is a gantry crane that is used to transport fuel and reactor components to and from pool storage and the reactor vessel. The platform spans the fuel storage and vessel pools on rails embedded in the refueling floor. A telescoping mast and grapple suspended from a trolley system are used to lift and orient fuel bundles for core, storage rack, or shipping cask placement. Control of the platform is from an Operator station on the main trolley with a position-indicating system provided to position the grapple over core locations. The platform control system includes interlocks to verify hook engagement and grapple load, prevent unsafe operation over the vessel during control rod movements, and limit vertical travel of the grapple. Two 1,000-lb capacity auxiliary hoists, one main trolley mounted and one auxiliary trolley mounted, are provided for in-core servicing such as LPRM replacement, fuel support piece replacement, jet pump servicing, and control rod replacement. The grapple in its fully retracted position provides approximately 7 ft 7 1/2 in minimum water shielding over the active fuel during transit. The refueling

platform has an auxiliary platform installed to accommodate the service pole caddy system.

Fuel Transfer Shielding Bridge

The portable radiation shield (Figure 9.1-23) is a temporary shielding device that is installed prior to the transfer of the spent fuel bundles from the reactor to the fuel storage pool. The fuel bundles are passed through the shield to reduce radiation levels in the upper drywell area. The shield is handled by the RBPC. When installed, one end of the shield is supported by the reactor vessel flange and the other end is supported by the refueling floor at el 329 ft 7 in. Following its use the shield is decontaminated and stored in the reactor building.

Auxiliary Service Platform

The auxiliary service platform (Figure 9.1-24) is used as a work area by personnel performing refuel outage-related activities. The auxiliary service platform's framed bridge rides on the refueling platform rails in the reactor building.

Reactor Cavity Dewatering

The dewatering of the reactor cavity, by using the reactor internals storage pool gate, may be performed during a plant outage for the purpose of accessing the reactor cavity and vessel.

A. The following steps dewater the reactor cavity (with the spent fuel pool gates installed). Basic sequence may be altered to accommodate underwater transfer of the steam dryer.

   1. Remove steam dryer and place in the storage pit with the sprinklers on.

   2. Flood up the reactor refueling cavity.

   3. Remove the moisture separator while ensuring the separator is continuously submerged (Section 1.12, Item 40, "Generic Licensing Issues").

   4. After the moisture separator and the steam dryer are in the storage pit, the reactor internals storage pool gate can be installed.

   5. Dewater the reactor cavity by opening the reactor cavity drains.

   The following steps refill the reactor cavity and return reactor equipment (with the spent fuel pool gates installed).

1. With reactor cavity drains closed, open reactor cavity fill system.

2. On completion of reactor cavity filling, remove reactor internals storage pool gate.

3. Return moisture separator to the reactor vessel.

4. Lower water level in the storage and reactor cavity pools.

5. As water level lowers, return steam dryer to reactor vessel.

B. Restrictions on the Use of the Reactor Internals Storage Pool Gate

Operating procedures and maintenance procedures shall contain restrictions on the use of the reactor internals storage pool gate to explicitly prevent the draining of the reactor internals storage pool during two situations when the reactor cavity is filled.

1. Any time that the reactor cavity is flooded and the spent fuel pool gates are removed, the reactor internals storage pool will be flooded, thus the reactor internals storage pool gate will not perform a safety-related function. Consequently, at no time could a failure of the reactor internals storage pool gate or seal result in lowering water level to unacceptable levels in the spent fuel pool. The reactor internals storage pool gate and gate seals are classified nonsafety related as they do not perform a safety function of maintaining water level in the spent fuel storage pool.

   In addition, if the storage pit must be drained, then the reactor cavity shall be drained prior to the storage pool draining or occur in parallel to the storage pool draining but not ahead of the storage pool. These restrictions are necessary primarily due to the design of the storage pool gate.

   The gate was designed to withstand the combined loads from seismic and hydrostatic concurrently but only with the hydrostatic load being on the reactor internals storage pool side of the storage pool gate.

2. Also, any time that reactor cavity is flooded, the reactor internals storage pool shall be flooded. This eliminates the possibility of a personnel and/or radiological hazard or safety problem from occurring in the event of a gate failure resulting from nondesigned load combinations.

9.1.4.2.8 Storage Equipment

Specially designed equipment storage racks are provided. Additional storage equipment is listed in Table 9.1-4. For a description of fuel storage racks and fuel arrangement, see Sections 9.1.1 and 9.1.2.

Defective fuel assemblies are placed in special fuel storage containers which are stored in the defective fuel storage rack, both of which are designed for the defective fuel. These may be used to isolate leaking or defective fuel while in the fuel pool and during shipping. Channels can also be removed from the fuel bundle while in a defective fuel storage container.

The fuel pool sipper may be used for out-of-core wet sipping at any time. It is used to detect a defective fuel bundle while circulating water through the fuel bundle in a closed system. The containers cannot be used for transporting a fuel bundle. The bail on the container head is not designed to fit into the fuel grapple.

9.1.4.2.9 Refueling Seal

During refueling operations, it will be required to isolate the space above the reactor vessel flange from the drywell atmosphere. To permit flooding of the reactor cavity for refueling, two separate air gaps will have to be closed: first, the inner annular air space between the reactor vessel flange and the primary containment, refueling bulkhead, and second, the outer air space between the reactor primary containment and the reactor head cavity liner. The inner space will be sealed with a steel bellows expansion joint. The outer space will be closed with an elastomer seal. The design consists of an inflatable elastomer seal used with a broad top flange which serves as a secondary seal in case of failure of the inflated section. Because the seismic adequacy of surrounding structures and qualification of the RPV response under accident loading are dependent on the stiffness of the seal, the predictable value of zero stiffness for the seal makes it possible to qualify the seal.

9.1.4.2.10 Under Reactor Vessel Servicing Equipment

The functions of the under reactor vessel servicing equipment are to remove and install control rod drives (CRDs), thermal sleeves, and the SRM/IRM detectors and to perform work associated with LPRM maintenance. Table 9.1-3 lists the equipment and tools required for servicing. Of the equipment listed, the CRD service platform is powered electrically and pneumatically.

The weight of the CRD handling tool is not to exceed 3,000 lb. When required, the CRD handling tool will be installed during refueling outages and shall be removed from the primary

containment prior to startup. The CRD handling tool is equipped with adequate brakes or gearing to prevent uncontrolled movement.

The CRD service platform provides a working surface for equipment and personnel performing work in the under vessel area. It is a polar platform capable of rotating in both forward and reverse directions for 360 deg. This equipment is designed in accordance with the applicable requirements of OSHA (Vol. 37, No. 202, Part 1910N), AISC, and ANSI-C-1 (National Electric Code).

The spring reel is used to pull the in-core guide tube seal or in-core detector into the in-core guide tube during in-core servicing.

The thermal sleeve installation tool locks, unlocks, and lowers and raises the thermal sleeve from the CRD guide tube.

The in-core flange seal test plug, used to determine the pressure integrity of the in-core flange O-ring seal, is constructed of noncorrosive material.

The key bender is designed to facilitate installation and removal of the antirotation key that is used on the thermal sleeve.

9.1.4.2.11 Description of Fuel Transfer

The fuel handling system provides a safe and effective means for transporting and handling fuel from the time it reaches the plant until it leaves the plant after post-irradiation cooling. The following sections describe the design bases of the fuel handling system. The requirements of RG 1.13 are satisfied.

Fuel handling procedures are described below. A typical refueling floor layout is shown on Figure 9.1-25.

The fuel handling process takes place primarily on the refueling floor above the reactor. The principal locations and equipment are shown on Figure 9.1-25. The reactor, fuel pool, internals pool, and shipping cask pool are connected to each other by canals. The fuel canal is open during reactor fueling, and Canal B is open during spent fuel shipping. At other times the canals are closed by means of canal liner gates, which make watertight barriers.

Receipt and Inspection of New Fuel The incoming new fuel is delivered to a receiving station in the reactor building. The crates are unloaded from the transport vehicle and examined for damage during shipment. The crate dimensions are approximately 32 in x 32 in x 18 ft. Each crate contains two fuel bundles supported by an inner metal container. The shipping weight of each unit is approximately 3,000 lb. The receiving station includes a separate area where the crate covers and the inner

metal containers can be removed from the crates. Both inner and outer shipping containers are reusable. Handling during uncrating is accomplished either by use of the RBPC extending down from the refueling floor through the equipment hatch or by a separate receiving area crane.

The reactor building 25-ton auxiliary hoist will lift the inner container up through the equipment hatch to the refueling floor. The fuel bundle will not be handled horizontally without support. The top and front of the crate are opened, and the bundles removed in a vertical position.

Either the 25-ton auxiliary or the 1/2-ton hoist of the RBPC equipped with general purpose grapple is used to transfer the new fuel bundles to either the new fuel storage vault or the new fuel inspection stand.

The new fuel inspection stand holds two bundles in vertical position. The inspector(s) ride up and down on a platform, and the bundles are manually rotated on their axes. Thus the inspectors can observe all visible surfaces on the bundles. After inspection, a new channel is usually installed on the bundle before transfer to the new fuel storage vault by the auxiliary hoist of the RBPC. The auxiliary hoist is also used with a general-purpose grapple to transfer new fuel from the new fuel vault or inspection stand to a storage rack position in the fuel pool. From this point on, the fuel is handled by the telescoping grapple on the refueling platform.

The refueling platform uses a grapple on a telescoping mast for lifting and transporting fuel bundles or assemblies. The telescoping mast can extend to the proper work level and, in its fully retracted state, maintains adequate water shielding over the fuel being handled.

Channeling Fuel

Two fuel preparation machines are located in the spent fuel pool.

When a new channel is used on new fuel that has not been previously channeled, the procedure is as follows: Either by using the refueling platform grapple, the bundle is placed in a fuel preparation machine. The fuel preparation machine carriage is lowered to its lowest position. A new fuel channel is lowered into the fuel preparation machine and attached to a channel handling tool at the top of the channel. The fuel preparation machine is raised lifting the fuel bundle up into the new channel. The channel is then bolted to the bundle using a channel fastener bolt and the channel bolt wrench. Or, the new channel can be lowered over the fuel bundle while the fuel bundle is in the fuel inspection stand.

If a new channel is to be used on irradiated fuel which will be returned to the reactor, the procedure is as follows: Using the

The ADH components located in the yard are evaluated for commitments in Section 2.4 regarding protection of safety-related facilities, systems and components against flood damage resulting from probable maximum precipitation (PMP) and historical maximum lake level. The evaluation concludes the ADH components will not impact external flood protection features.

The ADH equipment and piping heat loads are evaluated for impact on the reactor building heating, ventilating and air conditioning (HVAC) system. The reactor building HVAC system is capable of performing the design functions of Section 9.4.2 with the ADH heat loads.

The ADH piping is evaluated for flooding in the reactor building. The ADH piping is moderate-energy piping. The evaluation concludes the flood height in the reactor building resulting from a postulated crack in the moderate-energy ADH piping is below the level which results from the limiting case 18-in RHS line. Therefore, existing flood protection features are unaffected by the ADH piping.

9.1.6.4 Inspection and Testing

No special equipment tests are required for the nonsafety-related ADH system. The ADH plate heat exchangers will be leak tested prior to utilizing the ADH system during an outage, or any other time its use may be required, if the system has not been in operation for more than 30 days. This test is provided to ensure heat exchanger pressure boundary integrity and to minimize the potential for primary to secondary side leakage. The piping and check valves which form secondary containment pressure boundary will be tested for leakage prior to use of the ADH system. When the ADH system is not in use, spectacle flanges located between the check valves and secondary containment boundary may be used to provide the necessary isolation. Other than the above, routine visual inspections during operation are adequate to verify system operability.

Postmodification testing to verify that installation meets design standards includes system pressure tests, secondary containment isolation valve leak testing, and component operability testing. Startup testing included system hydraulic and thermal testing.

9.1.6.5 Instrumentation Requirements

<u>Description</u>

Instruments and controls are provided for manual control of the ADH system. The controls and monitors described in the following paragraphs are located local to the major pumps, heat exchangers and cooling towers.

All outdoor 480-V motor services are provided with local controls on the MCC. These controls have a start-stop switch for each

secondary loop pump and each cooling tower fan. No interlocks are provided for the secondary loop pumps. The cooling tower fans are provided with vibration trip switches and reducer gear oil level protective switches.

The primary loop pumps located in the reactor building have local controls mounted near the pumps to start and stop these pumps. An interlock from a differential pressure indicating switch will trip these pumps on low differential pressure across the heat exchanger boundary to maintain any leakage directed into the primary loop. This interlock circuit is designed to electrically fail in the low differential pressure direction.

Operation

The ADH valves are opened and closed manually.

The ADH pumps and cooling towers are placed into service manually from local remote switches. Interlocks prevent operation of the primary loop pumps whenever secondary loop pressure is less than 10 psi greater than primary loop pressure.

City water makeup to the cooling towers opens automatically when the cooling tower basin water level is low and closes automatically on high water level.

Monitoring

Local indicators (no control room indication) are provided for:

1. primary pump suction pressure
2. primary pump discharge pressure
3. primary pump flow
4. secondary pump suction pressure
5. secondary pump discharge pressure
6. secondary pump flow
7. heat exchanger inlet temperature (process)
8. heat exchanger outlet temperature (process)
9. heat exchanger inlet temperature (service)
10. heat exchanger outlet temperature (service)

TABLE 9.1-3

UNDER-REACTOR VESSEL SERVICING EQUIPMENT AND TOOLS

Equipment/Tool	Safety Class	Seismic Category	Quality Assurance Category
CRD handling tool	O	NA	NA
Equipment handling platform	O	NA	NA
Spring reel	O	NA	NA
Thermal sleeve removal tool	O	NA	NA
In-core flange seal test plug	O	NA	NA
Key bender	O	NA	NA

KEY: O = Other
NA = Not applicable

TABLE 9.1-4

TOOLS AND SERVICING EQUIPMENT

<u>Fuel Servicing Equipment</u>
Fuel preparation machines
New fuel inspection stand
Channel bolt wrenches
Channel handling tool
Fuel pool sipper
Channel gauging fixture
General purpose grapples
Fuel inspection fixture
Jib cranes
<u>Servicing Aids</u>
Pool tool accessories
Actuating poles
General area underwater lights
Local area underwater lights
Drop lights
Underwater TV monitoring system
Underwater vacuum cleaner
Viewing aids
Light support brackets
In-core detector cutter
In-core manipulator
<u>Reactor Vessel Servicing Equipment</u>
Reactor vessel servicing tools
Steam line plugs
Shroud head bolt wrenches
Head holding pedestals
Head stud rack
Head strongback carousel
Lifting strongback
Lifting slings
Service platform
Service platform support
Steam line plug/installation tool
Vessel nut handling tool
Head nut and washer storage racks
Service pole caddy system
<u>In-Vessel Servicing Equipment</u>
Auxiliary service platform
Instrument strongback
Control rod grapple

TABLE 9.1-4 (Cont'd.)

Control rod guide tube grapple
Fuel support grapple
Grid guide
Control rod latch tool
Instrument handling tool
Control rod guide tube seal
In-core guide tube seals
Fuel bundle sampler
Blade guides
Peripheral orifice grapple
Orifice holder
Peripheral fuel support plug
Fuel bail cleaner

Refueling Equipment

Refueling equipment servicing tools
Refueling platform
Fuel transfer shielding bridge
CAVSPAN system

Storage Equipment

Spent fuel storage racks
Channel storage racks
Control rod storage racks
In-vessel racks
New fuel storage rack
Defective fuel storage rack
Control rod guide tube storage rack

Under-Reactor Vessel Servicing Equipment

Control rod drive servicing tools
CRD hydraulic system tools
Neutron monitoring system servicing tools
Spring reels
Control rod drive handling tool
Equipment handling platform
Thermal sleeve installation tool
In-core flange seal test plug
Key bender

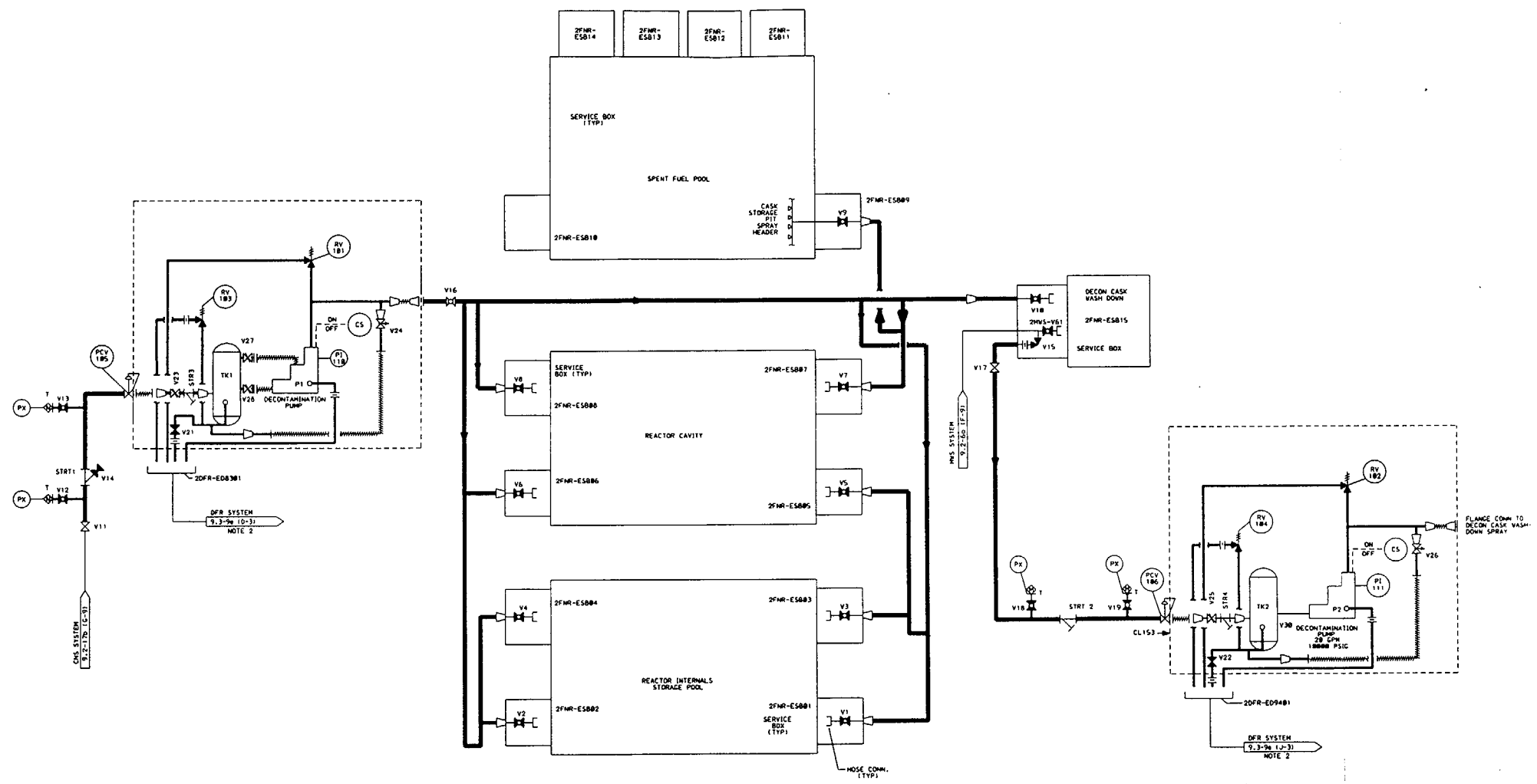

NOTES:
1. ALL INSTRUMENT & EQUIPMENT NUMBERS TO BE PREFIXED WITH "2DCS-" EXCEPT WHERE A DIFFERENT PREFIX IS SHOWN.
2. NO FLAG SHOWN ON CORRESPONDING DOCUMENT. COORDINATES PROVIDE INTERFACE LOCATION.

THIS DRAWING WAS PRODUCED ELECTRONICALLY. DO NOT TRACE AND CHANGES MANUALLY.

SOURCE: PID-102A-12
TITLE: DECONTAMINATION SYSTEM DCS

FIGURE 9.1-26a

DECONTAMINATION SYSTEM
DCS

NIAGARA MOHAWK POWER CORPORATION
NINE MILE POINT-UNIT 2
UPDATED SAFETY ANALYSIS REPORT