UPDATED SAFETY ANALYSIS REPORT

NINE MILE POINT NUCLEAR STATION — UNIT 2

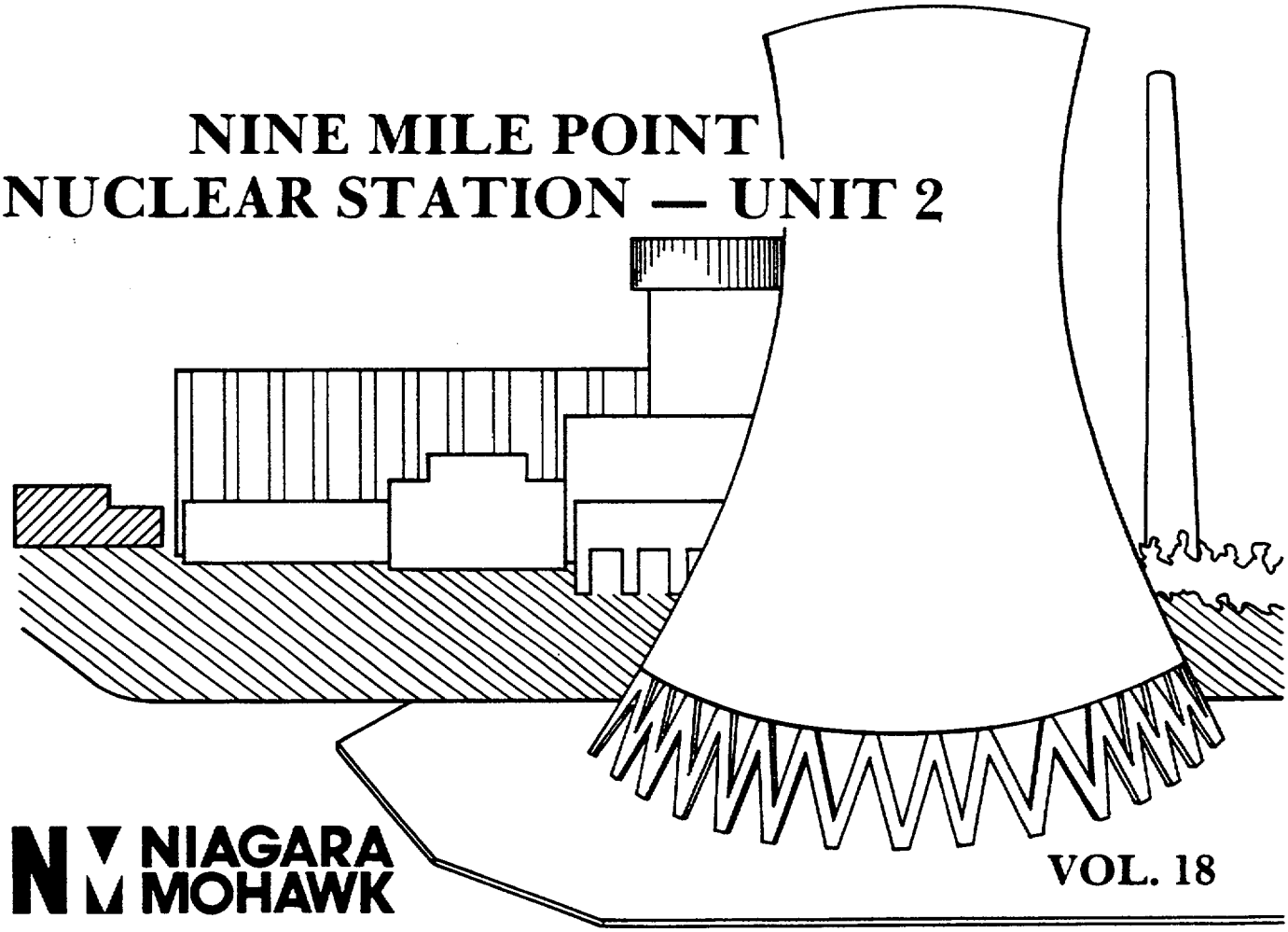

NIAGARA MOHAWK

VOL. 18

each of the reactor building supply lines is routed to essential components in the control and diesel generator buildings. One takeoff from the A loop reactor building supply line supplies service water to reactor building nonessential components during normal plant operation. One takeoff from the A loop portion of the common screenwell header supplies service water to the turbine building nonessential components during normal plant operation. Refer to Tables 9.2-1 and 9.2-2 for tabulations of essential and nonessential components that are cooled by the SWP system and cooling water flow rates.

Service water discharge from all buildings is combined outside the buildings in two separate, redundant discharge headers. A tap-off from each discharge header is routed to the CWS to supply makeup water. The service water discharges at el 279'-9". This discharge and the blowdown from the CWS are returned to Lake Ontario through a discharge tunnel and diffuser system.

Each of the main supply and return lines that supply service water to the reactor and turbine building nonessential components is provided with two isolation valves located in series. The discharge headers that supply CWS makeup water each contain two hydraulically-operated isolation valves and one check valve in series.

Two cross-connections have been provided between the B loop reactor building supply line and the service water supply lines to nonessential reactor and turbine building components. These components normally receive cooling water from the A loop. The two cross-connections allow the B loop to supply these loads whenever the A loop is unavailable during unit outages or for periodic inservice pressure testing required by ASME Section XI (Section 6.6). In addition, a cross-connect exists between two nonessential discharge headers downstream of the outlet from the nonessential loads in the reactor and turbine buildings, which may be used to direct flow through the available loop discharge piping. Each of the cross-connections contains a normally closed manual isolation valve.

The high-pressure core spray (HPCS) diesel generator (Division III) and associated switchgear room unit cooler receive a redundant supply of cooling water from either A or B loop of the SWP system. Service water to these components also returns through either A or B loop. The SWP system is sized so that if one loop is lost, the remaining loop is capable of providing necessary cooling water flow through these components.

Service water to each control building chilled water condenser contains a recirculation loop with a pump (2SWP*P2A and 2SWP*P2B). These pumps work in conjunction with the temperature control valves located in the chiller return lines to maintain the service water inlet temperature to the chillers above 53°F.

Each of the SWP return lines from the RHR heat exchangers has radiation monitors to detect any radioactivity resulting from a postulated tube leak. Radiation monitors are also provided on each of the service water discharge headers to the discharge bay (Section 11.5).

During normal plant operation and the initial phase of normal unit shutdown, four of the six SWP pumps are required to satisfy the plant heat load. The remaining pumps are spares to accommodate periodic maintenance.

The SWP system at Unit 2 is a once-through system which utilizes raw lake water from Lake Ontario. Since fall of 1989, zebra mussels were found in Lake Ontario. Most recently the mollusks have been confirmed at Unit 1 and Unit 2. Zebra mussels are capable of rapid reproduction causing plugging and serious damage to plant equipment if not treated; therefore, a service water raw water treatment program has been implemented. This is consistent with NRC Information Notice 89-76 and Generic Letter 89-13.

The biocide is stored in storage containers located onsite. The laydown area for the storage hoppers and pumps is enclosed in a portable environmental berm designed to retain the entire volume of the chemical. The biocide is pumped from the storage hoppers and added into the lake water inlet piping in the screenwell just north of the trash rakes, or directly into the intake structure. The intake structure injection may be done from shore via temporary piping or from boat or barge using temporary piping attached to the heater bars. Both methods ensure adequate mixing of the biocide.

During the treatment, the treated water is pumped through the systems taking feed from Lake Ontario water using the system pumps (e.g., service water, fire water, screenwash, fish jet pump system), and by the SWP system makeup to the CWS and the chilled water (HVK) system. The chemical is fed through the service water side of the following components/systems provided they are in service during the treatment:

1. Standby diesel generator cooling system.
2. RHR system heat exchangers.
3. Various unit coolers.
4. Control building HVK chillers.
5. Condensate air removal system (ARC) heat exchangers.
6. Auxiliary boiler system heat exchangers.
7. Lithium bromide cooling system heat exchangers.
8. TBCLC system heat exchangers.

the biocide, is injected into the SWP discharge lines just upstream of the discharge bay.

The SCT system consists of three pump skids which draw off of three storage tanks, and a local control panel located in the acid storage area (northwest corner) of the screenwell building.

Carrier water is used to provide prompt delivery of the biocide and detoxicant to the appropriate points in the SWP system. Automatic control provisions allow for a preset treatment schedule.

In addition, a SWP corrosion monitoring station is installed near the trash rakes in the screenwell building. The Station allows for sample coupon analysis of the intake and discharge streams to monitor the performance of the biocide treatment. The monitoring station includes a pump which draws pretreated service water from the intake channel. Treated service water is provided off a tie-in into the nonsafety-related portion of the SWP system. The sample water is then run through a closed monitoring loop which includes sample coupons of representative system materials and sessile beads.

The SWP system is designed with a margin for the following allowances:

1. Fouled pipe.
2. Heat transfer fouling factors.
3. Pressure drop across fouled equipment.
4. Piping and component corrosion allowance.
5. Margin for minor component leakage.

To detect leakage the system has the following provisions:

1. Low flow alarms.
2. Area leakage alarms.

These alarms alert the Control Room Operator of leakage. The Operator will then take appropriate action to investigate the leakage.

9.2.1.3 Safety Evaluation

The SWP system provides cooling water to essential components through two separate redundant supply and return headers. Each supply header provides sufficient cooling water for the following minimum components essential for the safe shutdown of the reactor and mitigates the consequences of a design basis LOCA:

1. One RHR heat exchanger and its associated RHR pump seal cooler.

2. One division of the reactor building, control building, diesel generator building, and SWP pump bay unit space coolers.

3. One standby diesel generator and the HPCS diesel generator, and their associated unit space coolers.

4. One control building chilled water condenser.

5. One reactor building ventilation recirculation cooling coil.

6. One DBA hydrogen recombiner.

7. One spent fuel pool heat exchanger.

8. Emergency makeup to the spent fuel pool.

A LOCA with offsite power available and a trip (single failure) of one of the four operating SWP pumps is the limiting design basis for the SWP system. This event is limiting because the SWP supply header cross-tie valves do not close automatically and the nonsafety-related components/systems are not isolated from the SWP system. During the initial phase of recovery from a LOCA, three SWP pumps satisfy cooling requirements of the above components except the RHR heat exchanger. When this heat exchanger is required, either the SWP flow to the turbine building nonessential loads is isolated or an additional SWP pump, if available, is used.

Following a LOOP or a LOCA coincident with a LOOP and a single failure of the Division 1 or Division 2 emergency diesel generator, the operating SWP pumps trip, the SWP cross-tie isolation valves close automatically, and the nonsafety-related components/systems required for normal operation are isolated from the SWP system. In this case, during the initial phase of recovery from a LOCA, one SWP pump satisfies cooling requirements of the above components except the RHR heat exchanger. When this heat exchanger is required, two SWP pumps are used.

Essential piping and components are located in Category I structures. These structures protect the SWP system from adverse environmental occurrences including SSE (Section 3.7) and tornadoes (Section 3.3). In the Unit 2 SWP system, there is no Category I pipe buried in the soil. Therefore, there is not a concern of failure of safety-related buried pipe resulting from soil erosion caused by failure of nonsafety-related piping. Two redundant loops of the SWP system have sufficient protection and physical and electrical separation to ensure that one loop is always available to permit safe shutdown of the plant in the event of:

1. Flooding (Section 3.4).

2. Pipe whip and jet impingement resulting from line breaks (Section 3.6).

3. Missiles that may result from equipment failures or tornadoes (Section 3.5).

4. Fire (Section 9.5.1 and Appendix 9A).

Originally, the FMEA of the SWP system was contained in the Unit 2 FMEA document, which is historical. FMEAs for plant systems are now performed and controlled by the design process.

No single-active failure coincident with a LOOP can prevent the SWP system from achieving its intended safety function.

THIS PAGE INTENTIONALLY BLANK

18. Service water pumps motor/feeder electrical fault.

19. Service water pumps motor overload.

20. Service water valves motor overload.

21. Service water strainer motor overload.

22. Chiller condensing water pumps motor overload.

23. Radiation monitoring trouble/manual out of service.

9.2.2 Reactor Building Closed Loop Cooling Water System

The RBCLCW system provides cooling water to reactor auxiliary system equipment and accessories during normal plant operating conditions. The RBCLCW system is not required to operate during emergency or faulted plant conditions. However, during this condition, portions of the system provide a Category I pressure boundary for backup cooling from the SWP system to cool the SFC heat exchangers and RHR pump seal coolers. The RBCLCW system is shown on Figure 9.2-3. Auxiliary equipment cooled by this system is listed in Table 9.2-3. Major RBCLCW system components are described in Table 9.2-4.

9.2.2.1 Design Bases

The RBCLCW system is designed to comply with the following design bases:

1. The RBCLCW system is designed to remove heat from various auxiliary equipment housed in the reactor building and turbine building during normal plant operation. The RBCLCW system is cooled by the SWP system, and makeup water is supplied from the MWS system.

2. In the event of a mechanical failure to the RBCLCW system or upon loss of offsite electrical power, the essential components that are normally cooled by the RBCLCW system will be automatically and/or remote manually isolated from the RBCLCW system and will be connected to the safety-related SWP system.

3. The major components of the RBCLCW system, including pumps, piping, heat exchangers, expansion tank, and valves, do not perform a safety function. These components are classified as Safety Class 4. These portions of the RBCLCW system are designed to ANSI, TEMA, HIS, NEMA, and ASME codes and standards as applicable.

4. Safety-related portions of the RBCLCW system are designed to Category I and Safety Class 2 or 3 criteria

to ensure compliance with 10CFR50 Appendix A, GDC 2, 4, 5, 44, 45, 46, 54, and 56, and RG 1.26, 1.29, 1.46, and 1.53 as applicable. Figure 9.2-3 shows the safety-related portions of the RBCLCW.

5. Isolation between nonnuclear safety and safety-related portions of the RBCLCW system is provided by remote manually-actuated motor or air-operated valves (AOVs).

6. During normal plant operation, the RBCLCW system provides an intermediate barrier between systems containing radioactive products and the SWP system, which transfers RBCLCW heat load to the ultimate heat sink (UHS). This design precludes a direct release of radioactive products into the environment.

7. Surveillance of system radioactivity is provided by continuous monitoring of the return line from the system heat exchangers.

9.2.2.2 System Description

The RBCLCW system is a closed loop system that provides cooling to auxiliary equipment located in the primary containment, reactor building, and turbine building.

The RBCLCW system consists of a primary loop with three 50-percent capacity main cooling water pumps, three 50-percent capacity booster pumps, three 50-percent capacity heat exchangers, one expansion tank, piping, valves, and instrumentation. A secondary loop dedicated to cooling the instrument air compressors is provided with two 100-percent capacity pumps, two 100-percent capacity heat exchangers, one expansion tank, piping, valves, and instrumentation. The secondary loop rejects heat to the primary loop. RBCLCW water is circulated through the shell side of the RBCLCW heat exchangers, where the system heat load is transferred to the SWP system, which flows through the heat exchanger tubes. The system capacity is based on the maximum heat loads that can occur during normal plant operations. The system is designed to remove 74×10^6 Btu/hr from the components listed in Table 9.2-3. Normally, a combination of any two main pumps, two booster pumps, and two heat exchangers is capable of providing this maximum heat removal capacity while maintaining a cooling water temperature of about 90°F with service water temperature up to about 72°F. With the service water temperature above 72°F, it may be necessary to shed/reduce system heat loads or place the standby heat exchanger in service.

The RBCLCW system is not a nuclear safety-related system and is not required to operate to assure the safe shutdown of the plant. However, some components and portions of the RBCLCW system pressure boundary are needed for post-accident operation. Those components that are needed to operate during this plant condition

are identified in Table 9.2-3. The SFC heat exchangers and the RHR system pump seal coolers are capable of remote manual alignment to the SWP system from the control room. The need to remote manually isolate the RBCLCW and connect the SWP system to the SFC heat exchangers is determined by fuel pool temperature. The RHR pump seals receive cooling water from the SWP system prior to starting the RHR pumps. The components, piping, valving, and instrumentation needed to ensure such isolation capability are nuclear safety related.

Equipment that is cooled by the RBCLCW system during normal operation includes:

1. SFC heat exchangers.
2. RWCU nonregenerative heat exchanger.
3. RWCU pump bearings, coolers, seal jackets, and pedestals.
4. Reactor building equipment drain coolers.
5. Drywell equipment drain cooler.
6. Drywell unit space coolers.
7. Reactor recirculation pump seal coolers, motor winding coolers, and motor bearing coolers.
8. Instrument air compressors.
9. RHR pump seal coolers.
10. CRD pump seal coolers and speed increasers.
11. Reactor plant sample panel.
12. Reactor recirculation sample cooler.
13. RHR sample coolers.
14. SFC and RWCU off-line radiation monitors.
15. Post-accident piping station panel.

During normal plant operations, two main pumps, two booster pumps, and two heat exchangers are in operation, and the third main pump, booster pump, and heat exchanger are in standby.

Makeup water for the RBCLCW system is supplied from the demineralized water storage tank by the makeup water transfer pumps to the expansion tanks. The expansion tanks serve as surge and makeup tanks for the system. The RBCLCW system expansion tanks' levels are automatically controlled. The expansion tanks

accommodate system volume changes resulting from coolant expansion and contraction and are physically located above the RBCLCW pumps to provide the pumps with sufficient NPSH.

In the event of a loss of cooling, the SFC heat exchangers and the RHR pump seal heat exchangers, normally supplied by the RBCLCW, can be supplied with cooling water by means of parallel supply and return connections from the SWP system headers.

The RBCLCW supply and return headers are connected to the SWP system through normally closed isolation valves. The safety-related RBCLCW supply headers are isolated from the nonsafety portion of the RBCLCW system by means of check valves (one in each header) in series with normally open motor- or air-operated isolation valves. The safety-related return headers are isolated from the nonsafety-related portion of the RBCLCW system by a motor- or air-operated isolation valve.

RBCLCW system temperature is controlled by bypassing part of the component cooling water flow around the RBCLCW heat exchangers. A temperature control valve is provided to regulate flow through the heat exchangers to maintain the desired temperature. The temperature control valve nominal setpoint is about 85°F. The RBCLCW temperature range, with plant in operation, is between 75°F to 90°F. A normally closed, manually-operated butterfly valve is provided to bypass the temperature control valve in the event of control valve malfunction.

The standby RBCLCW system pump starts automatically on low pressure in the pump discharge header.

System components and piping include corrosion-resistant materials or sufficient wall thickness to preclude degradation of system performance by long-term corrosion. No chemical additives are used to inhibit corrosion, as sufficient corrosion allowance is provided on all equipment and piping.

Thermal relief valves are provided on all equipment that might be overpressurized due to thermal expansion of fluid when equipment is isolated. The shell side of the SFC heat exchangers is protected from overpressure by relief valves based on tube failure criteria.

Radioactivity in the RBCLCW system is continuously monitored in the return line from the RWCU nonregenerative heat exchanger and in the branch return header that serves the SFC heat exchangers.

In addition to the normal modes of operation of the RBCLCW system, connections have been added to the inlet and outlet piping inside of the drywell, and piping has been added through the reactor building wall, such that a temporary source of chilled water can be supplied utilizing hoses connected to this piping for control of the drywell ambient air temperature during plant outages. The source of the chilled water will be a

skid-mounted chiller brought on site each outage and located outside of the reactor building. In this case, the RBCLCW temperature is allowed to go below 75°F. The operation of the chilled water unit is administratively controlled as to maintain the drywell area temperature above the minimum requirements. Secondary containment will be assured in the event of a hose break by use of redundant spring-activated check valves inside of the reactor building at each penetration.

THIS PAGE INTENTIONALLY BLANK

During normal plant operation, secondary containment integrity will be maintained by safety-related blind flanges on the outboard side of the reactor building penetrations.

9.2.2.3 Safety Evaluation

Those essential portions of the RBCLCW system that are required to function during accident conditions are designed to provide cooling for safety-related components in combination with a single active or passive failure.

The power supply for the safety-related components in the RBCLCW system is provided from the redundant emergency standby power source during LOOP. Essential equipment receives cooling from the safety-related redundant SWP system. The SWP system is completely redundant and powered from separate emergency buses (Section 8.3).

During normal plant operating conditions, the RBCLCW system is capable of removing the design basis heat load with the use of any two main pumps, booster pumps, and heat exchangers. During transient or accident conditions, the safety-related SWP system will remove the design basis heat load from those components discussed in Section 9.2.2.2, with the exception of the reactor recirculation pump seal coolers, motor winding coolers, and motor bearing coolers. The standby pump and heat exchanger provide redundancy in the event of a pump or heat exchanger failure.

A radiation monitor RE115 is provided in the return header of the system which serves both SFC heat exchangers. The monitor is placed downstream of the heat exchanger return branch lines that connect into the return header. An additional radiation monitor is provided in the return header of the RWCU nonregenerative heat exchanger.

Leakage into the RBCLCW system is detected by the following:

1. Expansion tank level increase.

2. Flow measurement in the RWCU nonregenerative heat exchangers return line.

3. Temperature detection in the return lines of components.

4. Radiation monitors (Section 11.5).

5. Conductivity analysis.

Leakage out of the RBCLCW system is detected by the following:

1. Excessive makeup cycles to the expansion tank.

2. Expansion tank level alarms.

3. Flow indication from the recirculation pumps and motors.

4. Differential flow measurement across the drywell unit space coolers.

The RBCLCW system serves as intermediate pressure boundary between components that could contain radioactive fluids and the SWP system. The design feature mitigates the possibility of a direct release to the plant environment during normal plant operation. Should leakage occur from the RBCLCW system to the SWP system during normal operation, the additional feature of radiation monitoring in the service water effluent is provided to detect any possible radiation leaks.

The portions of the RBCLCW system that penetrate the primary containment have motor-operated isolation valves that are capable of remote manual operation from the control room and will close automatically during an accident condition. The location and number of isolation valves comply with the requirements of GDC 56.

Major components of the RBCLCW system are housed within a Category I structure that provides protection from earthquake (Section 3.7), tornado (Section 3.3), and flooding (Section 3.4). Those portions of the RBCLCW system that are required to operate during accident conditions are additionally protected from the effects of internally-generated missiles (Section 3.5), pipe whip, and jet impingement (Section 3.6).

The transfer of cooling water from the RBCLCW system to the SWP system can occur remote manually for the SFC heat exchangers and RHR pump coolers. The presence of this service water crossover capability and the instrumentation used to actuate and/or monitor the need for crossover, in conjunction with the system redundancy, protection from adverse internal and external environmental hazards, and the high reliability of the SWP system assure that the safety-related requirements are satisfied.

Originally, a FMEA for the RBCLCW system was contained in the Unit 2 FMEA document, which is historical. FMEAs for plant systems are now performed and controlled by the design process.

9.2.2.4 Testing and Inspection Requirements

Initial construction tests such as hydrostatic leak tests are conducted in accordance with the applicable code requirements. Tests for initial system flow distribution, valve operability, alarm setpoints, and instrumentation and control loop checks will be done in accordance with the preoperational test program (Chapter 14).

Heat exchanger performance is observed during normal plant operations. Availability of the RBCLCW standby pump will be

20. RBCLCW to drywell unit cooler Division I and Division II containment isolation valves LOCA override.

9.2.3 Makeup Water Treatment System

9.2.3.1 Design Bases

9.2.3.1.1 Safety Design Bases

The makeup water treatment (WTS) system is not required to effect or support the safe shutdown of the reactor or to perform in the operation of reactor safety features.

9.2.3.1.2 Power Generation Design Bases

The WTS system is designed to remove dissolved and suspended solids from raw lake water to produce the demineralized water quality described in Table 9.2-5. The WTS system has the capability of producing 220,000 gpd of demineralized water based on mean values of inlet impurity and 190,000 gpd based on maximum values of inlet water impurity. These mean and maximum inlet impurities are listed in Table 9.2-6.

Pressurized tanks, including water-treating filters and ion exchangers, meet the design requirements of ASME Boiler and Pressure Vessel Code, Section VIII, Division 1. All piping and valves in the system are designed in accordance with ANSI B31.1.

9.2.3.2 System Description

The WTS system is shown on Figure 9.2-5. Raw lake water, supplied to the WTS system by the SWP system, is passed through a single train of filters and ion exchangers where both organic and inorganic materials are removed to produce the required quality of demineralized water. The WTS system supplies all the water requirements initially used in the power plant, with the exception of service water and circulating water. Demineralized water is used during plant operation as makeup or washdown by various systems in the turbine, reactor, and radwaste buildings.

Service water is supplied to two fiberglass waste water recovery tanks. Each tank has a 30,000-gal capacity. Two filter pumps, one on standby, take suction from the waste water recovery tanks and deliver 310 gpm to the filtered water storage tank, a 30,000-gal fiberglass tank, through a water-treating filter. This filter is made up of graded anthracite which removes suspended solids from the water. Provisions have been made for backwashing the filter.

Water is then pumped by the filtered water transfer pumps at 210 gpm from the filtered water storage tank through the activated carbon filter. Filtered water is also pumped by the circulating water seal pumps at 40 gpm to the circulating water pump seals and various users throughout the plant. Water from the city of

Oswego may also be used as a source of water to the filtered water storage tanks.

The activated carbon filter, which removes suspended solids, is made up of a graded anthracite supporting bed topped with a carbon filter material. The filter also can be backwashed. The backwash flow from both the anthracite and activated carbon filters is directed to the sewage treatment plant via underground piping.

Water passing through the activated carbon filter enters the ion exchanger train consisting of weak and strong acid cation exchanger demineralizers, forced draft degasifier, degasified water pumps, weak and strong base anion exchanger, and mixed bed ion exchanger demineralizer. Table 9.2-7 lists the physical characteristics and capacity of each ion exchanger.

The filters and weak and strong acid cation vessels are designed for an internal pressure of 100 psig. The weak and strong base anion vessels and mixed bed exchangers are designed for an internal pressure of 125 psig. All the pressurized vessels are hydrostatically tested at 1 1/2 times their design pressure. The vessel internals are made of corrosion-resistant materials with adequate distribution of flow and collection without channeling and bypassing.

The system includes a forced-draft degasifier to remove carbon dioxide (CO_2) from the system. The degasifier is located between the cation and anion exchangers. The CO_2 is vented to the atmosphere through a roof vent. The decationized water is repressurized by the degasified water pumps located downstream of the degasifier before passing through the weak and strong base anion vessels and the mixed bed exchanger. The demineralized water is then supplied directly to the two demineralized water storage tanks located in the screenwell building. These tanks constitute part of the MWS system.

Upon depletion of exchanger capacity, the resins are chemically regenerated. The regeneration process is automatic following manual initiation. The anion and mixed bed exchangers are regenerated with sodium hydroxide (NaOH). NaOH is pumped to the exchangers from the caustic day tank. Dilution of the NaOH is accomplished by mixing makeup water supplied from the caustic dilution water tank with the caustic. Separate pumps are used to pump caustic to the mixed bed exchanger and the strong base anion exchanger. The caustic solution is directed to the weak base anion exchanger following regeneration of the strong base anion exchanger. The cation and mixed bed ion exchangers are regenerated with sulfuric acid (H_2SO_4). H_2SO_4 is pumped to each ion exchanger from the acid day tank by pumps associated with the specific exchanger. The acid is diluted with makeup water prior to regeneration.

Fourteen heaters are required to be operating on each intake structure to prevent the formation of anchor ice and thus ensure safe shutdown flows. The design of the electrical heating elements is based on a flow rate of 18.1 cfs across each face of the intake structure or 48,740 gpm total intake flow through each structure. These flow rates result in a design velocity of 0.96 fps through each bar rack. The design of the electrical heater is based on a 2-in x 3-in rectangular bar which is conservatively treated as a circular cylinder with an equivalent diameter (for the Reynolds and Mussett numbers calculations). Based on these values, a 32°F intake water temperature and a 2°F rise in the bar temperature, the required electrical heating element capacity for each bar is 346 W. The heating elements are specified for a required minimum of 400 W and are conservatively rated at 450 W each. The electrical supply facilities are designed to provide a minimum of 396 W with the lowest voltage conditions and longest circuit length. The heating elements are powered by two separate Class 1E electrical buses. Both buses power the heating elements on three faces of each intake structure with each face separately wired. Therefore, at least one-half of the area of the bars is always heated providing sufficient flow area for safe shutdown flows. In addition, the intake structure has an inherent safety feature in that less than one-half the area of the openings on both structures is required for normal operation.

Four temperature elements in the onshore screenwell shafts, one on each electrical division in each shaft, energize the heating elements on the offshore intake structures. Because of the rapid fluctuations in temperature sometimes experienced in the lake, the heating elements are activated at a lake temperature of 38°F or less. Operation of the heating elements is monitored in the control room.

Each structure is independently connected to the onshore screenwell by a 4.5-ft diameter concrete intake encasement. The encasements are located within two 13 1/2 by 13 ft shotcreted tunnels (Figure 1.2-29). In addition to the intake encasement, tunnel no. 1 (the west tunnel) contains electrical conduits and has a cross-sectional area to accommodate plant discharge flow with a minimum of 60 sq ft. Tunnel no. 2 (the east tunnel) contains a 3.5-ft diameter fiberglass fish return pipe and electrical conduits for the heating elements in the bar racks in addition to the encased intake pipe. Both tunnels and the intake pipes are sloped downward toward the shoreline at a minimum of 0.01 ft/ft.

At the onshore screenwell, each intake encasement connects to a separate vertical shaft. The bottom of each shaft extends 10 ft below the invert of the 4.5-ft diameter encasement at the point where the intake encasement intersects the shaft. This provides a sediment trap just below the point where the maximum velocity decreases from approximately 3 fps in the 4.5-ft diameter horizontal intake encasement to approximately 1.0 fps in the vertical shafts. Access to these traps is provided through the

operating deck above each shaft for periodic cleaning, when necessary.

After passing through the two vertical shafts, the water enters the onshore screenwell building, which has a floor elevation of 224 ft. The screenwell arrangement is shown on Figure 9.2-13. Two motor-operated, rectangular rotary gates, arranged in series and normally open, are located between the north shaft and the intake bay. Each gate is powered from a separate Class 1E electrical bus. When these gates are closed, no water enters the intake bay through the north shaft.

Downstream of the rotary gates, water from both vertical shafts merges into a common bay and then is divided into two 4-ft wide screenbays. An angled, flush-mounted traveling water screen and two trash racks, one upstream and one downstream of the traveling water screens, are located in each screenbay. The two traveling water screens are angled 25 deg to the upstream direction of flow with their downstream ends converging. The trash racks upstream of the traveling water screens are cleaned by a motorized rake. The traveling water screens are cleaned by a water spray wash system that is actuated by a timer or a high differential pressure across the traveling water screens. The debris washed from the screens is directed into a trash trough that empties into a perforated trash basket.

Trash racks are provided upstream of the traveling water screens. Following a SSE, these trash racks would prevent floating debris, which might otherwise enter the flow path if the screens were dislodged, from reaching the service water pumps.

Water passes through the traveling water screens to the two screenbays which merge into a common bay. The service water and fire protection pumps take suction from this bay. Two motor-operated, rectangular rotary gates, arranged in parallel and normally closed, are located upstream of the two screenbays to provide a traveling water screen bypass flow path to the service water pumps. Each rotary gate is powered from a separate Class 1E electrical bus. A trash rack is located downstream of these gates.

9.2.5.2.2 Discharge System

The discharge consists of service water bypass (service water not utilized as CWS system makeup), CWS system blowdown, WTS system discharge, and liquid radwaste.

The discharge system consists of an onshore bay, a portion of one intake tunnel, a discharge tunnel, and a two-port diffuser (Figure 1.2-29). All discharge is conveyed to the discharge bay located on the west side of the two intake shafts and separated from them by a wall extending up to el 279 ft that acts as a weir (Figure 9.2-13). Stop-log slots are provided from the top of each weir (el 279 ft) to the operating deck (el 285 ft) with a

Flow in the St. Lawrence River is characterized by its extreme regularity. The maximum flow (320,000 cfs) is less than twice the minimum flow (162,000 cfs). This condition existed before construction of the St. Lawrence Power Project, and would continue today if the project did not exist. In the improbable event of the simultaneous failure of the Iroquois Dam and the Moses-Saunders Power Dam or Long Sault Dam, the actual level to which Lake Ontario would fall would be governed by supplies of water to the lake during the period following such failure and the natural resistance of the lakes to sudden changes in levels and flows. These effects would guarantee that the actual minimum still water level of the lake would be well above the design minimum water level elevation of the site during any period necessary to reestablish control of the lake.

9.2.5.3.4 Evaluation of Effects of Transportation Accidents on Operation of the Ultimate Heat Sink

Evaluation of the effects of collisions with the intake and discharge structures is provided in Section 2.2.3.1.5.

The accidental beaching of any watercraft on the plant site will not present a threat to safe operation since the unit is set back approximately 300 ft from the shoreline and both the intake and discharge tunnels are safely located well below ground (Figure 1.2-29).

9.2.5.3.5 Evaluation of Effects of Accidental Releases of Oil on the Intake Structure

The Unit 2 intake structures are designed to protect unit operations from the effects of accidental releases of oil in Lake Ontario near the site. Evaluation of the effects of such spills is discussed in Section 2.2.3.1.6.

9.2.5.4 Inspection and Testing Requirements

The four Category I rectangular rotary gates and associated control and instrumentation are tested in accordance with Technical Specification requirements. The bar rack heating elements on each intake structure face are monitored to determine heating element failure. If more than 7 elements on three faces of each structure powered from the same electrical bus are out of service, replacement heating elements will be installed (Technical Specifications).

9.2.5.5 Instrumentation Requirements

Description

Safety-related instrumentation and controls are provided to automatically or manually maintain service water pump suction bay water level, service water discharge bay water level, and service water intake tunnel water temperature. Instrumentation and

controls automatically control service water intake channel water temperature.

The controls and monitors described below are located in the main control room. The control logic is shown on Figure 9.2-2.

Operation

Sufficient service water pump suction bay water level is assured automatically by the intake screenwell rotary bypass gate valves. These valves automatically open on low-low pump suction bay water level, allowing intake water to bypass the normal channel. In addition, they may be controlled manually by opening or closing either intake screenwell bypass gate valve switch. Failure of the normal discharge path increases discharge bay water level. The intake gate valve will close if the water level exceeds high-high, redirecting the discharge flow through intake shaft no. 1.

The service water intake channel may be tempered. Tempering flow may be controlled automatically or manually using the temperature control valve. Tempering operation is governed by the restrictions or limitations in the facility's Environmental Protection Plan (Nonradiological). Fish that enter the intake shaft are returned to Lake Ontario via the jet motive pump.

Monitoring

Indicators are provided for:

1. Service water pump suction bay and discharge bay water levels.
2. Intake shafts inlet tempering water flow.
3. Jet motive pump flow.

Alarms are provided for:

1. Service water intake bay low water level.
2. Service water discharge bay high water level.
3. Intake shaft gate valve closed.
4. Service water intake tunnel water temperature low.
5. Jet motive pump motor electrical fault.
6. Service water intake system trouble.

9.2.6 Condensate Storage Facilities

9.2.6.1 Design Bases

9.2.6.1.1 Safety Design Bases

The condensate storage facility condensate makeup and drawoff (CNS) system is not required to effect or support safe shutdown of the reactor or to support the operation of any nuclear safety system.

9.2.6.1.2 Power Generation Design Bases

The purpose of the CNS system is to provide makeup water to various systems in the plant, to serve as a source of water during refueling operations and as a reserve for the HPCS and reactor core isolation cooling (RCIC) systems, and to provide for condenser hotwell level control. For additional information concerning refueling water, refer to Section 9.1.3.

Each of two CSTs is designed to hold 450,000 gal based on the following:

50 percent of refueling water requirement	287,000 gal
50 percent of normal water usage	25,000 gal
HPCS and RCIC reserve	135,000 gal

The design objective water quality for the condensate makeup is as follows:

Conductivity	≤1.0 umho/cm @ 25°C*
Chlorides (as Cl)	≤0.05 ppm
Soluble silica	≤0.2 ppm
Sodium (as Na)	≤0.02 ppm
Insolubles	≤0.30 ppm

System piping is designed to ANSI B31.1. Condensate transfer pumps are designed to the standards of the Hydraulic Institute.

* This limit applies after correction for dissolved CO_2.

9.2.6.2 System Description

The CNS system consists of two storage tanks, each with a nominal capacity of 450,000 gal, two parallel condensate transfer pumps, and necessary piping and instrumentation. The piping and instrumentation drawing (P&ID) is given on Figure 9.2-17. The storage tanks and pumps are housed in the condensate storage building. The tanks are vented by the condensate building exhaust fans to the main stack; therefore, any discharge of airborne radiation is monitored. Minimum operating temperature of the tanks is 40°F with a design temperature of 180°F.

Condensate is supplied from the storage tank to the makeup and drawoff system for distribution to various systems throughout the plant. Pressurized distribution is accomplished by the condensate transfer pumps. Unpressurized distribution (i.e., direct suction from the storage tank) is also supplied.

The CNS system serves the following systems:

System or Use	Purpose
RHR	Initial fill and flushing
CRD	CRD pump supply as a backup to the condensate system
Decontamination area	Washdown and decontamination
Spent fuel pool	Makeup and supply
HPCS	Testing, flushing, and reserve supply to the suppression pool
RCIC	Testing, flushing, and reserve supply to the suppression pool
LPCS	Flushing
Condensate system	Makeup
Refueling volume	Makeup and fill
CND system	Regeneration and resin sluicing
RWCU	Filter demineralizer backwash precoating
Turbine building services	Makeup, supply, and sample dilution
Radwaste building services	Makeup, supply, and sample dilution

TABLE 9.2-1A

DIVISION I COMPONENTS REQUIRED SERVICE WATER FLOWS (GPM)
ASSUMING COMPLETE FAILURE OF DIVISION II

The flow rates listed below correspond to the originally specified flows (in the corresponding equipment specifications) but are not the flow rates required for the equipment to achieve the required heat removal capacity.

Equipment Identification Number	Division	LOCA[1]	LOCA & LOOP	Shutdown[1]	LOOP	Notes
Reactor Building						
2HVR*UC401A	I	29	29	29	29	
2HVR*UC401B	II	0	0	0	0	
2HVR*UC401C	II	0	0	0	0	
2HVR*UC401D	I	29	29	29	29	
2HVR*UC401E	II	0	0	0	0	
2HVR*UC401F	II	0	0	0	0	
2HVR*UC402A	I	54	54	54	54	
2HVR*UC402B	I	54	54	54	54	
2HVR*UC403A	I	77	77	77	77	(5)
2HVR*UC403B	II	0	0	0	0	(5)
2HVR*UC404A	I	21	21	21	21	
2HVR*UC404B	I	21	21	21	21	
2HVR*UC404C	II	0	0	0	0	
2HVR*UC404D	II	0	0	0	0	
2HVR*UC405	I	13	13	13	13	
2HVR*UC406	II	0	0	0	0	
2HVR*UC407A	I	16	16	16	16	
2HVR*UC407B	I	16	16	16	16	
2HVR*UC407C	I	16	16	16	16	
2HVR*UC407D	II	0	0	0	0	
2HVR*UC407E	II	0	0	0	0	
2HVR*UC408A	I	29	29	29	29	(5)
2HVR*UC408B	I	0	0	0	0	(5)
2HVR*UC409A	II	0	0	0	0	
2HVR*UC409B	II	0	0	0	0	
2HVR*UC410A	I	16	16	16	16	
2HVR*UC410B	II	0	0	0	0	
2HVR*UC410C	II	0	0	0	0	
2HVR*UC411A	I	21	21	21	21	
2HVR*UC411B	II	0	0	0	0	
2HVR*UC411C	II	0	0	0	0	
2HVR*UC412A	I	21	21	21	21	
2HVR*UC412B	II	0	0	0	0	
2HVR*UC413A	I	350	350	0	0	(5)
2HVR*UC413B	II	0	0	0	0	(5)
2HVR*UC414A	I	26	26	26	26	(5)
2HVR*UC414B	II	0	0	0	0	(5)
2HVR*UC415A	I	20	20	20	20	(5)
2HVR*UC415B	II	0	0	0	0	(5)
2RHS*E1A	I	7,400[2]	7,400[2]	7,400[2]	7,400[2]	

TABLE 9.2-1A (Cont'd.)

Equipment Identification Number	Division	LOCA[1]	LOCA & LOOP	Shutdown[1]	LOOP	Notes
Reactor Building (Cont'd.)						
2RHS*E1B	II	0	0	0	0	
2RHS*P1A	I	20[3]	20[3]	20[3]	20[3]	
2RHS*P1B	II	0	0	0	0	
2RHS*P1C	II	0	0	0	0	
2SFC*E1A	I	2,410[3]	2,410[3]	2,410[3]	2,410[3]	(5)
2SFC*E1B	II	0	0	0	0	(5)
2HCS*RBNR1A	I	10	10	0	0	
2HCS*RBNR1B	II	0	0	0	0	
Control Building						
2HVK*CHL1A	I	340	340	340	340	(5)
2HVK*CHL1B	II	0	0	0	0	(5)
2HVC*UC101A	I	29	29	29	29	
2HVC*UC101B	II	0	0	0	0	
2HVC*UC102	II	19	19	19	19	(7)
2HVC*UC103A	I	11	11	11	11	
2HVC*UC103B	II	0	0	0	0	
2HVC*104	I	29	29	29	29	
2HVC*105	II	0	0	0	0	
2HVC*106	I	52	52	52	52	
2HVC*107	II	0	0	0	0	
2HVC*108A	I	50	50	50	50	
2HVC*108B	II	0	0	0	0	
Diesel Generator Building						
2EGS*EG1	I	800	800	0	800	
2EGS*EG2	III	600	600	0	600	
2EGS*EG3	II	0	0	0	0	
2HVP*UC1A	I	11	11	0	11	
2HVP*UC1B	II	0	0	0	0	
2HVP*UC2	III	11	11	0	11	
Screenwell Building						
2HVY*UC2A	I	85	85	85	85	(6)
2HVY*UC2B	II	0	0	0	0	(6)
2HVY*UC2C	I	0	0	0	0	(6)
2HVY*UC2D	II	0	0	0	0	(6)
Total Flow (GPM)		12,687	12,687	10,905	12,327	

TABLE 9.2-1B

DIVISION II COMPONENTS REQUIRED SERVICE WATER FLOWS (GPM)
ASSUMING COMPLETE FAILURE OF DIVISION I

The flow rates listed below correspond to the originally specified flows (in the corresponding equipment specifications) but are not the flow rates required for the equipment to achieve the required heat removal capacity.

Equipment Identification Number	Division	LOCA[1]	LOCA & LOOP	Shutdown[1]	LOOP	Notes
Reactor Building						
2HVR*UC401A	I	0	0	0	0	
2HVR*UC401B	II	29	29	29	29	
2HVR*UC401C	II	29	29	29	29	
2HVR*UC401D	I	0	0	0	0	
2HVR*UC401E	II	29	29	29	29	
2HVR*UC401F	II	29	29	29	29	
2HVR*UC402A	I	0	0	0	0	
2HVR*UC402B	I	0	0	0	0	
2HVR*UC403A	I	0	0	0	0	5
2HVR*UC403B	II	77	77	77	77	5
2HVR*UC404A	I	0	0	0	0	
2HVR*UC404B	I	0	0	0	0	
2HVR*UC404C	II	21	21	21	21	
2HVR*UC404D	II	21	21	21	21	
2HVR*UC405	I	0	0	0	0	
2HVR*UC406	II	13	13	13	13	
2HVR*UC407A	I	0	0	0	0	
2HVR*UC407B	I	0	0	0	0	
2HVR*UC407C	I	0	0	0	0	
2HVR*UC407D	II	16	16	16	16	
2HVR*UC407E	II	16	16	16	16	
2HVR*UC408A	I	0	0	0	0	5
2HVR*UC408B	I	0	0	0	0	5
2HVR*UC409A	II	29	29	29	29	
2HVR*UC409B	II	0	0	0	0	
2HVR*UC410A	I	0	0	0	0	
2HVR*UC410B	II	16	16	16	16	
2HVR*UC410C	II	16	16	16	16	
2HVR*UC411A	I	0	0	0	0	
2HVR*UC411B	II	21	21	21	21	
2HVR*UC411C	II	21	21	21	21	
2HVR*UC412A	I	0	0	0	0	
2HVR*UC412B	II	21	21	21	21	
2HVR*UC413A	I	0	0	0	0	5
2HVR*UC413B	II	350	350	0	0	5
2HVR*UC414A	I	0	0	0	0	5
2HVR*UC414B	II	26	26	26	26	5
2HVR*UC415A	I	0	0	0	0	5
2HVR*UC415B	II	20	20	20	20	5
2RHS*E1A	I	0	0	0	0	
2RHS*E1B	II	7,400[2]	7,400[2]	7,400[2]	7,400[2]	

TABLE 9.2-1B (Cont'd.)

Equipment Identification Number	Division	LOCA[1]	LOCA & LOOP	Shutdown[1]	LOOP	Notes
Reactor Building (Cont'd.)						
2RHS*P1A	I	0	0	0	0	
2RHS*P1B	II	20[3]	20[3]	20[3]	20[3]	
2RHS*P1C	II	20[3]	20[3]	20[3]	20[3]	
2SFC*E1A	I	0	0	0	0	5
2SFC*E1B	II	2,410[3]	2,410[3]	2,410[3]	2,410[3]	5
2HCS*RBNR1A	I	0	0	0	0	
2HCS*RBNR1B	II	10	10	0	0	
Control Building						
2HVK*CHL1A	I	0	0	0	0	5
2HVK*CHL1B	II	340	340	340	340	5
2HVC*UC101A	I	0	0	0	0	
2HVC*UC101B	II	29	29	29	29	
2HVC*UC102	II	19	19	19	19	7
2HVC*UC103A	I	0	0	0	0	
2HVC*UC103B	II	11	11	11	11	
2HVC*104	I	0	0	0	0	
2HVC*105	II	13	13	13	13	
2HVC*106	I	0	0	0	0	
2HVC*107	II	52	52	52	52	
2HVC*108A	I	0	0	0	0	
2HVC*108B	II	50	50	50	50	
Diesel Generator Building						
2EGS*EG1	I	0	0	0	0	
2EGS*EG2	III	600	600	0	600	
2EGS*EG3	II	800	800	0	800	
2HVP*UC1A	I	0	0	0	0	
2HVP*UC1B	II	11	11	0	11	
2HVP*UC2	III	11	11	0	11	
Screenwell Building						
2HVY*UC2A	I	0	0	0	0	6
2HVY*UC2B	II	85	85	85	85	6
2HVY*UC2C	I	0	0	0	0	6
2HVY*UC2D	II	0	0	0	0	6
Total Flow (gpm)		12,681	12,681	10,899	12,321	

TABLE 9.2-3

DESIGN DATA OF COMPONENTS SUPPLIED WITH
REACTOR BUILDING CLOSED LOOP COOLING WATER

Description	Quantity	Mode of Operation	Total Flow Requirements (gpm)	Process Heat Load (10^6 Btu/hr)
Spent fuel pool heat exchangers	2	Normal/accident[1]	2,400	16
RWCU nonregenerative heat exchanger	1	Normal	1,404	39
RWCU pump bearings, pedestals, and seal jackets coolers	2	Normal	108	0.8
Reactor building equipment drain coolers	3	Normal	317	3.3
Drywell equipment drain cooler	1	Normal	104	1.1
Drywell unit space coolers[2]	10	Normal	1,295	7
Reactor recirculation motor winding coolers, motor bearing coolers, and pump seal coolers	2	Normal	750	3.7
CCP heat exchangers for instrument air compressors	2	Normal	135	1.4
RHR pump seal coolers	3	Normal/accident[1]	60	*
Control rod drive pump bearing and seal coolers	2	Normal	50	*
Reactor plant sampling panel	1	Normal	33	*
Reactor recirculation sample cooler	1	Normal	15	*
RHR sample cooler	2	Normal	30	*
SFC and RWCU heat exchanger off-line radiation monitors	2	Normal	17	*
Post-accident piping station panel[3]	1	Accident	10	*

* The combined heat load for these components is ~1.3 x 10^6 Btu/hr.

(1) Supplied with service water for safety-related function.
(2) Only 9 out of 10 drywell unit space coolers are normally in operation.
(3) Post-accident piping station panel's heat load is normally isolated.

TABLE 9.2-6

INFLUENT WATER QUALITY[1]

Constituent	Concentration[2][3] Max mg/l	Mean mg/l
Alkalinity (as $CaCO_3$)	106	88.5
Calcium (as Ca)	54	45.64
Magnesium (as Mg)	9.6	6.67
Chloride (as Cl)	70	37.78
Iron (as Fe)	0.36	0.134
Ortho-P (as P)	0.05	0.0106
(as PO_4)	0.15	0.0325
Sulfate (as SO_4)	39	29.4
Suspended solids	3	<3
Silica (as Si)	5	0.25
(as SiO_2)	10.71	0.56
Total dissolved solids	370	175
Copper (as Cu)	0.41	0.0667
Zinc (as Zn)	0.638	0.0628
pH	8.8	8.0

(1) Influent expected at outlet of the activated carbon filter.
(2) These values are based on filtered lake water.
(3) Except pH.

TABLE 9.2-7

DEMINERALIZER DATA

Equipment	Diameter		Bed Depth		Height		Resin Volume		Exchanger Capacity	
	in	cm	in	cm	in	cm	in	cm	kg/ft^3	lg/l
Weak acid cation	54	137.16	39	99.06	75	190.50	50	1.415	28.8	1.3
Strong acid cation	84	213.36	43	109.22	87	220.98	141	3.99	12.1	0.55
Weak base anion	72	182.88	39	99.06	81	205.74	88	2.49	19.0	0.86
Strong base anion	48	121.92	40	101.60	87	220.98	40	1.132	9.15	0.42
Mixed bed exchanger	48	121.92			99	251.46				
Cation resin			24	60.96			24	0.679	16.1	0.73
Anion resin			24	60.96			24	0.679	7.1	0.32

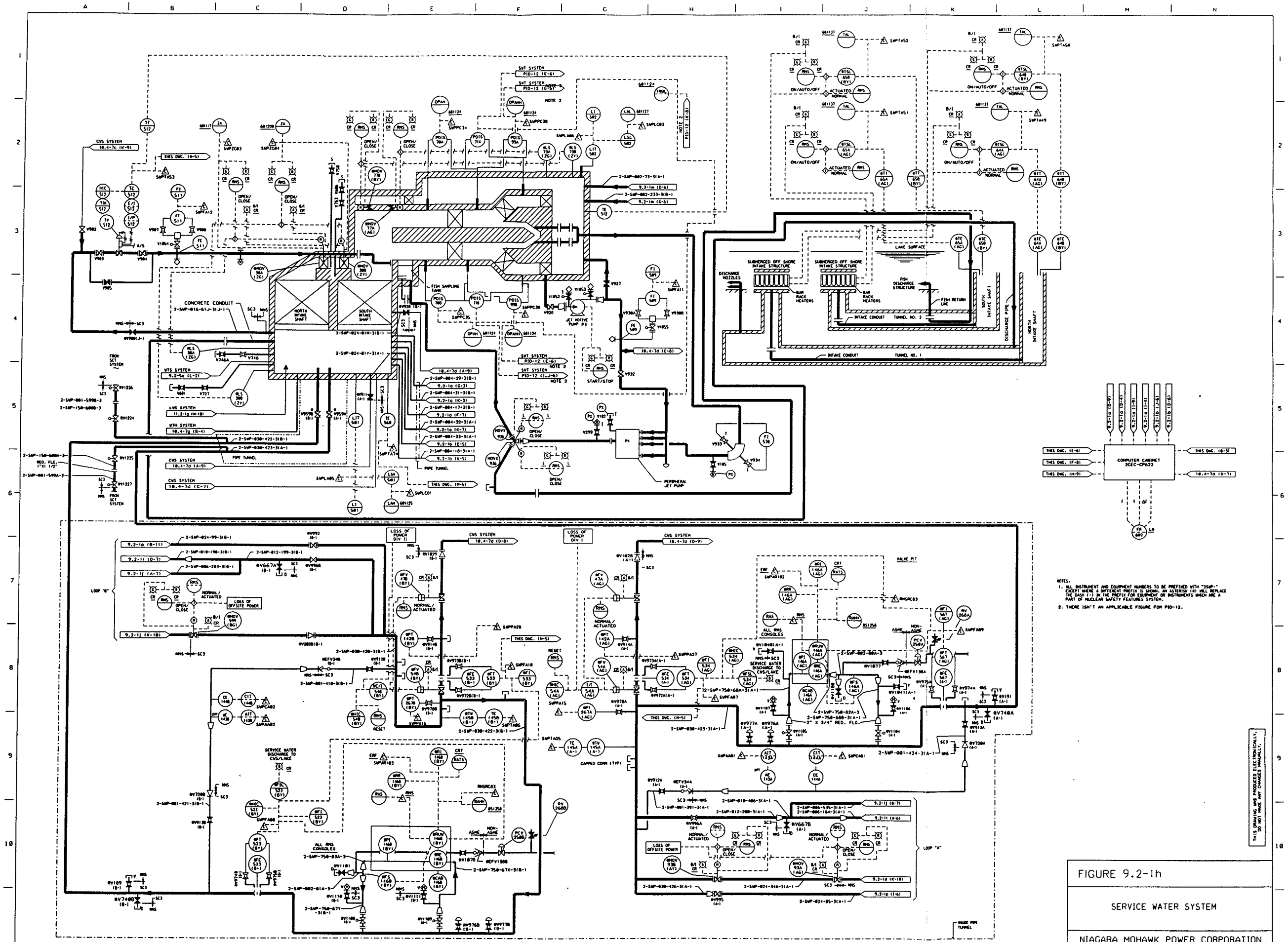

NOTES:

1. ALL INSTRUMENT AND EQUIPMENT NUMBERS TO BE PREFIXED WITH "2SWP-" EXCEPT WHERE A DIFFERENT PREFIX IS SHOWN. AN ASTERISK (*) WILL REPLACE THE DASH (-) IN THE PREFIX FOR EQUIPMENT OR INSTRUMENTS WHICH ARE A PART OF NUCLEAR SAFETY FEATURES SYSTEM.
2. THERE ISN'T AN APPLICABLE FIGURE FOR PID-12.

THIS DRAWING WAS PRODUCED ELECTRONICALLY. DO NOT MAKE ANY CHANGES MANUALLY.

SOURCE. PID-11H-26
TITLE. SERVICE WATER

FIGURE 9.2-1h

SERVICE WATER SYSTEM

NIAGARA MOHAWK POWER CORPORATION
NINE MILE POINT-UNIT 2
UPDATED SAFETY ANALYSIS REPORT

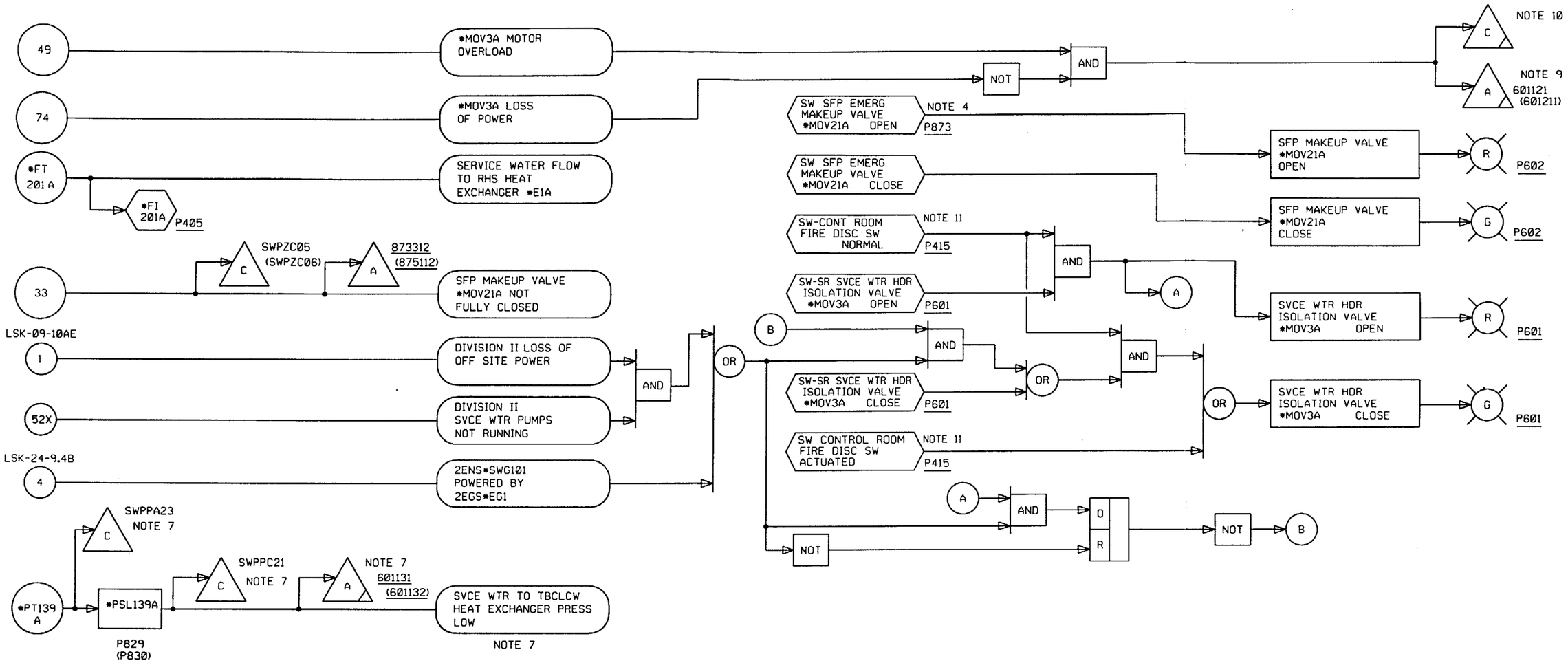

NOTES:

1. ALL INSTRUMENT AND EQUIPMENT NUMBERS TO BE PREFIXED WITH "2SWP-" EXCEPT WHERE A DIFFERENT PREFIX IS SHOWN. AN ASTERISK (*) WILL REPLACE THE DASH (-) IN THE PREFIX FOR EQUIPMENT OR INSTRUMENTS WHICH ARE A PART OF NUCLEAR SAFETY FEATURES SYSTEM.
2. LOGIC IS SHOWN FOR *FT201A. LOGIC IS SIMILAR FOR *FT201B.
3. LOGIC IS SHOWN FOR VALVE *MOV21A. LOGIC IS SIMILAR FOR VALVE *MOV21B.
4. KEY OPERATED SWITCHES TO PREVENT INADVERTENT OPERATION OF *MOV21A AND *MOV21B.
5. LOGIC IS SHOWN FOR ISOLATION VALVE *MOV3A. LOGIC FOR *MOV3B, *MOV19A & B, *MOV599 AND *MOV93A & B IS SIMILAR.
6. ASSOCIATED EQUIPMENT MARK NUMBERS:

MOV3A, B	PT139A, B
MOV19A, B	PT140A, B
MOV599	PT139A
MOV93A, B	PT140A, B

7.

PRESSURE TRANSMITTER	COMPUTER POINT	ANNUNCIATOR WINDOW	COMPUTER POINT
*PT139A	SWPPC21	601131	SWPPA23
*PT139B	SWPPC22	601131	SWPPA24
*PT140A	SWPPC23	601132	SWPPA25
*PT140B	SWPPC24	601132	SWPPA26

8. LOGIC IS SHOWN FOR *MOV3A MOTOR OVERLOAD. LOGIC FOR *MOV3B, 19A,19B,21A,21B,67A,67B,599,93A & 93B MOTOR OVERLOAD IS SIMILAR.
9. COMMON ANNUNCIATOR WINDOW FOR ALL SERVICE WATER VALVE MOTOR OVERLOADS IN EACH DIVISION.
10.

VALVE	COMPUTER PT.	VALVE	COMPUTER PT.
*MOV3A	SWPTC11	*MOV599	SWPTC17
*MOV3B	SWPTC12		
*MOV19A	SWPTC15	*MOV93A	SWPTC17
*MOV19B	SWPTC16	*MOV93B	SWPTC18
*MOV21A	SWPTC15		
*MOV21B	SWPTC16		
*MOV67A	SWPTC17		
*MOV67B	SWPTC18		

11. CONTROL ROOM FIRE DISCONNECTING SW IS SHOWN FOR ISOLATION VALVES *MOV3A, *MOV19A AND *MOV93A ONLY.

SOURCE: LSK-9-10F

FIGURE 9.2-2

SERVICE WATER SYSTEM
LOGIC DIAGRAM SHEET 6 OF 27

SETPOINTS SHOWN ON LOGIC DIAGRAMS ARE FOR LOGIC CLARIFICATION ONLY AND MAY BE ONLY APPROXIMATIONS OF THE ACTUAL PROCESS SETPOINT. REFER TO SETPOINT DATA SHEETS FOR ACTUAL PROCESS SETPOINTS.

NIAGARA MOHAWK POWER CORP.
NINE MILE POINT-UNIT 2
UPDATED SAFETY ANALYSIS REPORT

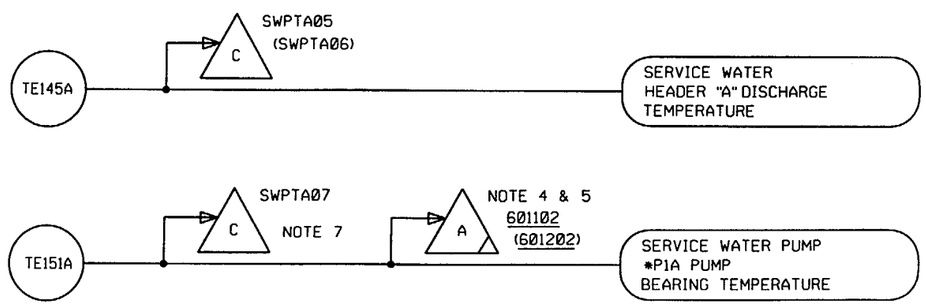

NOTES:

1. ALL INSTRUMENT AND EQUIPMENT NUMBERS TO BE PREFIXED WITH "2SWP-" EXCEPT WHERE A DIFFERENT PREFIX IS SHOWN. AN ASTERISK (*) WILL REPLACE THE DASH (-) IN THE PREFIX FOR EQUIPMENT OR INSTRUMENTS WHICH ARE A PART OF NUCLEAR SAFETY FEATURES SYSTEM.
2. LOGIC IS SHOWN FOR TE145A-HEADER "A". LOGIC FOR TE145B-HEADER "B" IS SIMILAR.
3. LOGIC IS SHOWN FOR TE151A. LOGIC FOR TE151B, C, D, E & F, 152A, B, C, D, E & F, 155A, B, C, D, E & F, 150A, B, C, D, E & F IS SIMILAR.
4. COMMON ANNUNCIATOR FOR ALL SERVICE WATER PUMP IN EACH DIVISION.
5. COMPUTER GENERATED ALARM FOR "HIGH TEMPERATURE".
6. INSTRUMENTS ARE QA CAT I FOR MAINTAINING PRESSURE BOUNDARY ONLY.
7. ASSOCIATED EQUIPMENT MARK NUMBERS:

PUMP	PUMP INBOARD		PUMP OUT BOARD		MOTOR INBOARD		MOTOR OUTBOARD	
	TE	CMPTR PT	TE	CMPTR PT	TE	CMPTR PT	TE	CMPTR PT
*P1A	TE151A	SWPTA07	TE155A	SWPTA13	TE152A	SWPTA19	TE150A	SWPTA25
*P1B	TE151B	SWPTA08	TE155B	SWPTA14	TE152B	SWPTA20	TE150B	SWPTA26
*P1C	TE151C	SWPTA09	TE155C	SWPTA15	TE152C	SWPTA21	TE150C	SWPTA27
*P1D	TE151D	SWPTA10	TE155D	SWPTA16	TE152D	SWPTA22	TE150D	SWPTA28
*P1E	TE151E	SWPTA11	TE155E	SWPTA17	TE152E	SWPTA23	TE150E	SWPTA29
*P1F	TE151F	SWPTA12	TE155F	SWPTA18	TE152F	SWPTA24	TE150F	SWPTA30

SOURCE: LSK-9-10L

FIGURE 9.2-2

SERVICE WATER SYSTEM
LOGIC DIAGRAM SHEET 11 OF 27

SETPOINTS SHOWN ON LOGIC DIAGRAMS ARE FOR LOGIC CLARIFICATION ONLY AND MAY BE ONLY APPROXIMATIONS OF THE ACTUAL PROCESS SETPOINT. REFER TO SETPOINT DATA SHEETS FOR ACTUAL PROCESS SETPOINTS.

NIAGARA MOHAWK POWER CORP.
NINE MILE POINT-UNIT 2
UPDATED SAFETY ANALYSIS REPORT

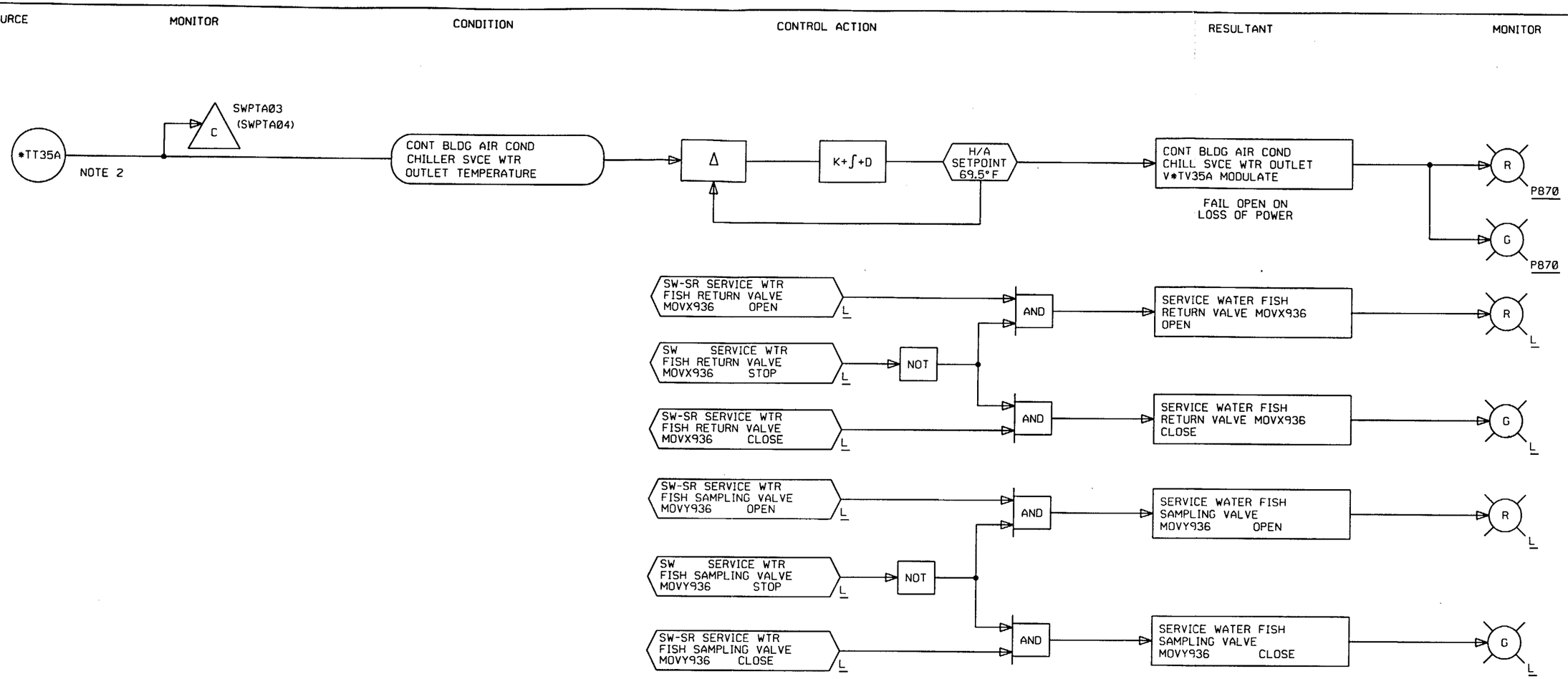

NOTES:

1. ALL INSTRUMENT AND EQUIPMENT NUMBERS TO BE PREFIXED WITH "2SWP-" EXCEPT WHERE A DIFFERENT PREFIX IS SHOWN. AN ASTERISK (*) WILL REPLACE THE DASH (-) IN THE PREFIX FOR EQUIPMENT OR INSTRUMENTS WHICH ARE A PART OF NUCLEAR SAFETY FEATURES SYSTEM.
2. LOGIC IS SHOWN FOR VALVE *TV35A. LOGIC FOR VALVE *TV35B IS SIMILAR.

SETPOINTS SHOWN ON LOGIC DIAGRAMS ARE FOR LOGIC CLARIFICATION ONLY AND MAY BE ONLY APPROXIMATIONS OF THE ACTUAL PROCESS SETPOINT. REFER TO SETPOINT DATA SHEETS FOR ACTUAL PROCESS SETPOINTS.

SOURCE: LSK-9-10Q

FIGURE 9.2-2

SERVICE WATER SYSTEM
LOGIC DIAGRAM SHEET 14 OF 27

NIAGARA MOHAWK POWER CORP.
NINE MILE POINT-UNIT 2
UPDATED SAFETY ANALYSIS REPORT

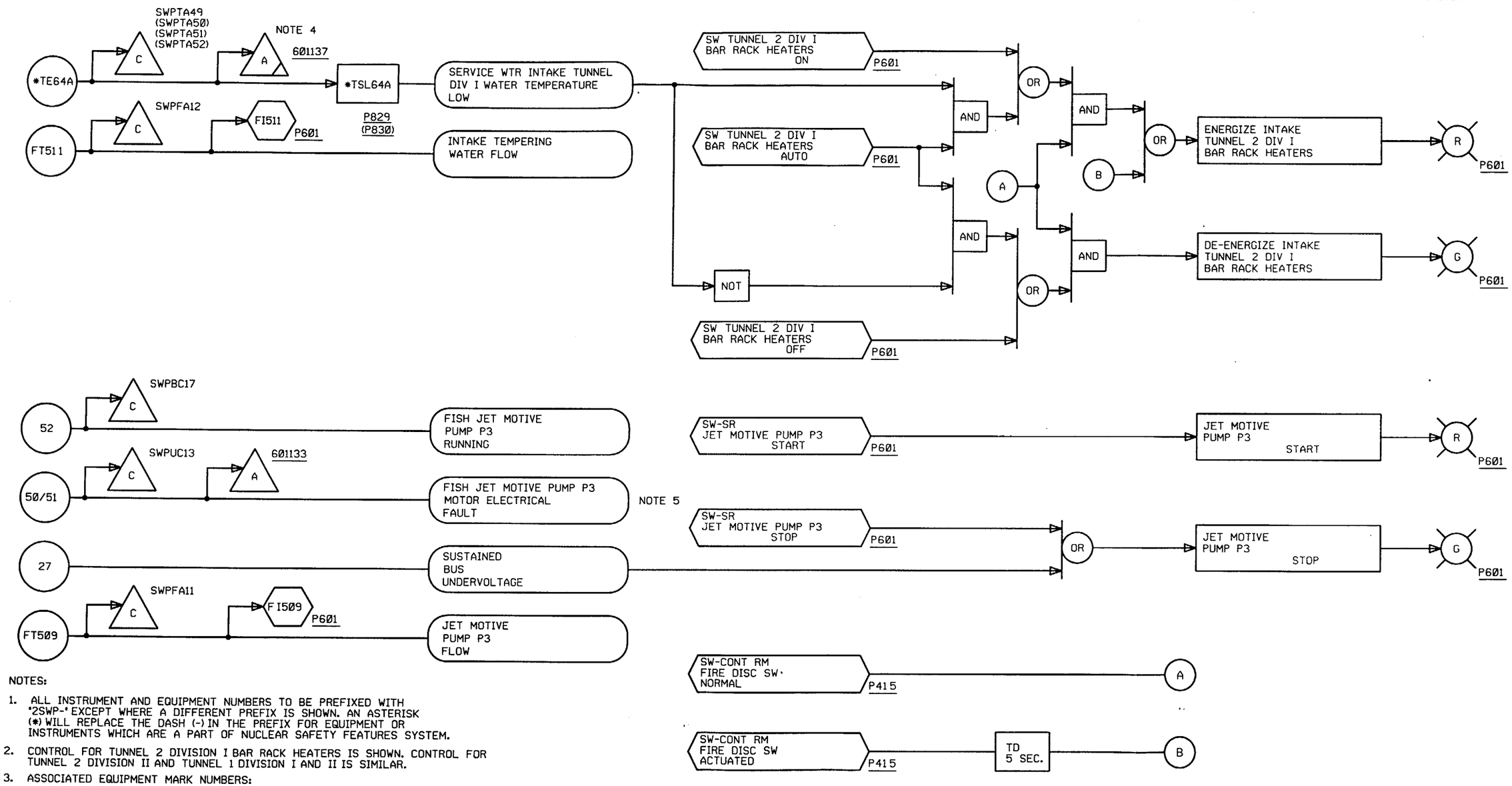

NOTES:

1. ALL INSTRUMENT AND EQUIPMENT NUMBERS TO BE PREFIXED WITH "2SWP-" EXCEPT WHERE A DIFFERENT PREFIX IS SHOWN. AN ASTERISK (*) WILL REPLACE THE DASH (-) IN THE PREFIX FOR EQUIPMENT OR INSTRUMENTS WHICH ARE A PART OF NUCLEAR SAFETY FEATURES SYSTEM.
2. CONTROL FOR TUNNEL 2 DIVISION I BAR RACK HEATERS IS SHOWN. CONTROL FOR TUNNEL 2 DIVISION II AND TUNNEL 1 DIVISION I AND II IS SIMILAR.
3. ASSOCIATED EQUIPMENT MARK NUMBERS:

TUNNEL 2		TUNNEL 1	
DIVISION I	DIVISION II	DIVISION I	DIVISION II
*TE64A	*TE64B	*TE65A	*TE65B
2CES*PNL415	2CES*PNL416	2CES*PNL415	2CES*PNL416

4. COMPUTER GENERATED ALARM FOR LOW INTAKE TUNNEL WATER TEMPERATURE. SETPOINT IS ABOUT 2°F ABOVE TECH. SPEC. REQUIREMENT.
5. THIS IS A DIRECT ACTING TRIP AND AUTOMATIC LOCKOUT WITH A MANUAL RESET FEATURE.

SETPOINTS SHOWN ON LOGIC DIAGRAMS ARE FOR LOGIC CLARIFICATION ONLY AND MAY BE ONLY APPROXIMATIONS OF THE ACTUAL PROCESS SETPOINT. REFER TO SETPOINT DATA SHEETS FOR ACTUAL PROCESS SETPOINTS.

SOURCE: LSK-9-10U

FIGURE 9.2-2

SERVICE WATER SYSTEM
LOGIC DIAGRAM SHEET 18 OF 27

NIAGARA MOHAWK POWER CORP.
NINE MILE POINT-UNIT 2
UPDATED SAFETY ANALYSIS REPORT

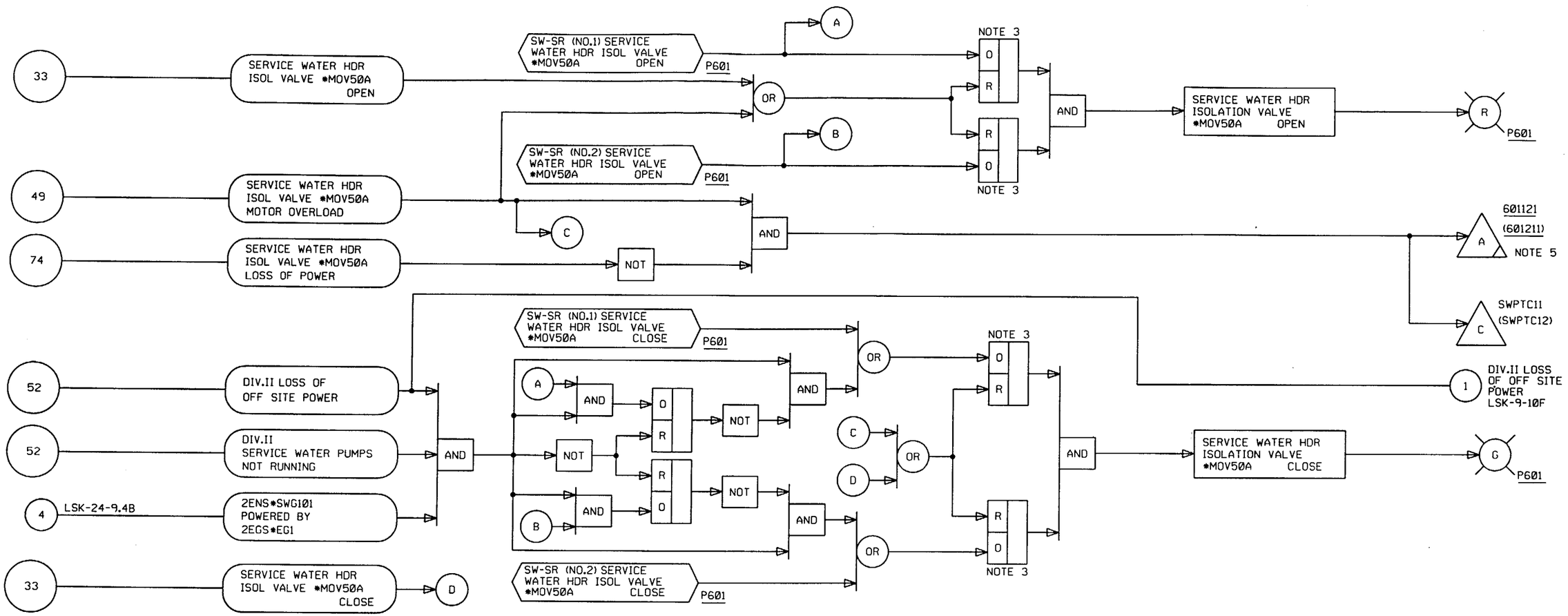

NOTES:

1. ALL INSTRUMENT AND EQUIPMENT NUMBERS TO BE PREFIXED WITH "2SWP-" EXCEPT WHERE A DIFFERENT PREFIX IS SHOWN. AN ASTERISK (*) WILL REPLACE THE DASH (-) IN THE PREFIX FOR EQUIPMENT OR INSTRUMENTS WHICH ARE A PART OF NUCLEAR SAFETY FEATURES SYSTEM.
2. LOGIC IS SHOWN FOR ISOLATION VALVE *MOV50A. LOGIC FOR ISOLATION VALVE *MOV50B IS SIMILAR.
3. THIS REPRESENTS A MOTOR STARTER.
4. TWO MOTOR STARTERS AND CONTROL SWITCHES ARE USED FOR EACH VALVE TO PREVENT INADVERTENT VALVE CLOSURE DUE TO SINGLE FAILURE OR OPERATIONAL ERRORS.
5. COMMON ANNUNCIATOR WINDOW FOR ALL SERVICE WATER VALVE MOTOR OVERLOADS IN EACH DIVISION.
6. ASSOCIATED EQUIPMENT MARK NUMBERS:

DIV.I	DIV.II
*MOV50A	*MOV50B
(52) DIV.II LOOP	(52) DIV.I LOOP
(52) DIV.II SVCE WTR PUMPS	(52) DIV.I SVCE WTR PUMPS
(4) 2ENS*SWG101 POWERED BY 2EGS*EG1	(4) 2ENS*SWG103 POWERED BY 2EGS*EG3

SETPOINTS SHOWN ON LOGIC DIAGRAMS ARE FOR LOGIC CLARIFICATION ONLY AND MAY BE ONLY APPROXIMATIONS OF THE ACTUAL PROCESS SETPOINT. REFER TO SETPOINT DATA SHEETS FOR ACTUAL PROCESS SETPOINTS.

SOURCE: LSK-9-10AE

FIGURE 9.2-2

SERVICE WATER SYSTEM
LOGIC DIAGRAM SHEET 27 OF 27

NIAGARA MOHAWK POWER CORP.
NINE MILE POINT-UNIT 2
UPDATED SAFETY ANALYSIS REPORT

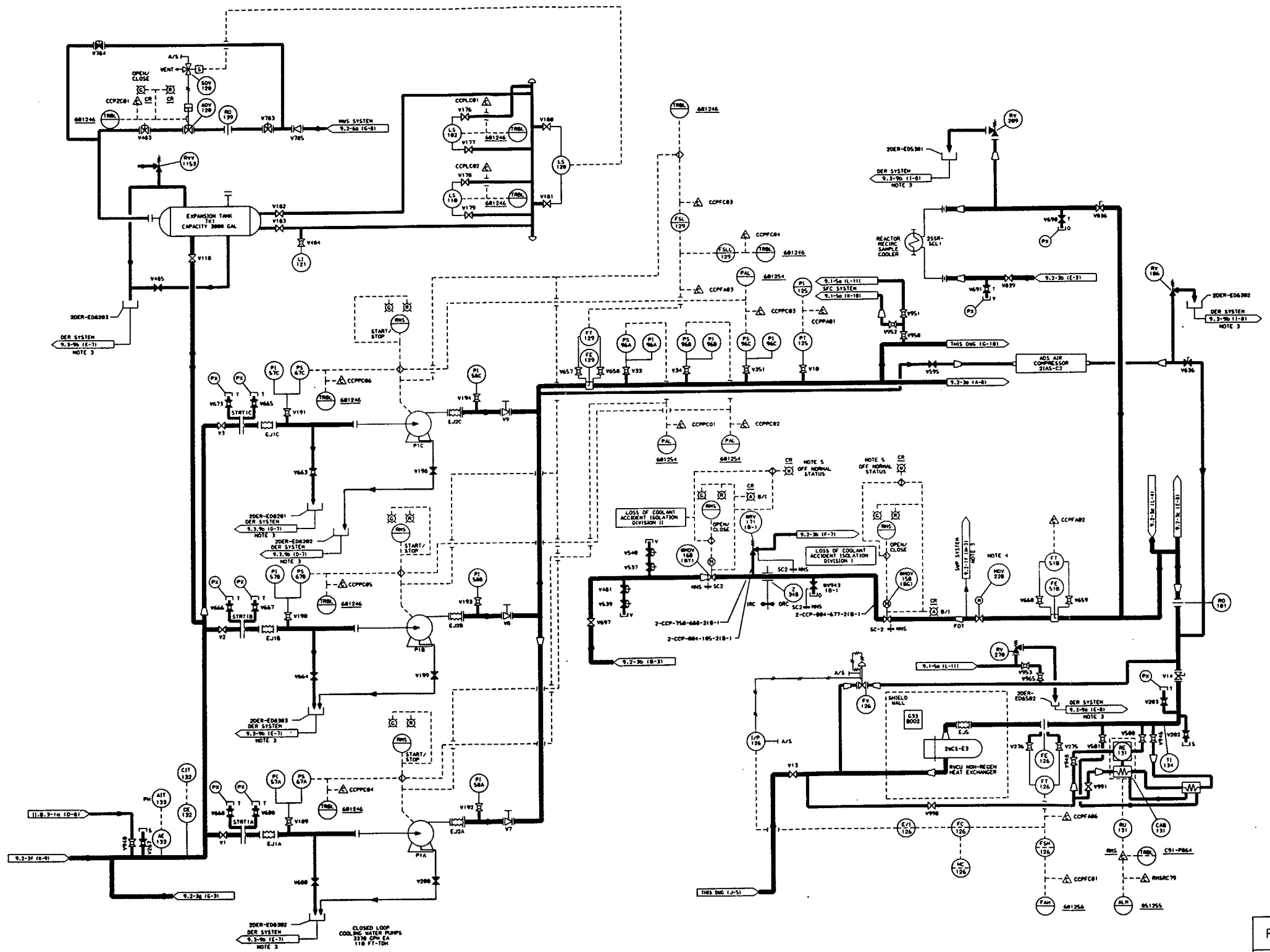

NOTES.

1. ALL INSTRUMENTS AND EQUIPMENT NUMBERS TO BE PREFIXED WITH "2CCP-" EXCEPT WHERE A DIFFERENT PREFIX IS SHOWN. AN ASTERISK (*) WILL REPLACE THE DASH (-) IN THE PREFIX FOR EQUIPMENT OR INSTRUMENTS WHICH ARE A PART OF NUCLEAR SAFETY FEATURES SYSTEM.
2. G.E. IDENTIFICATION NUMBERS ARE SHOWN IN SQUARES.
3. NO FLAG SHOWN ON CORRESPONDING DOCUMENT. COORDINATES PROVIDE INTERFACE LOCATION.
4. VALVE IS NON-FUNCTIONAL. POWER SUPPLY IS DISCONNECTED.
5. OFF-NORMAL STATUS DISPLAY SYSTEM IS ABANDONED IN PLACE.

THIS DRAWING WAS PRODUCED ELECTRONICALLY. DO NOT MAKE MANUAL CHANGES.

FIGURE 9.2-3a

REACTOR BUILDING CLOSED LOOP COOLING WATER

NIAGARA MOHAWK POWER CORPORATION
NINE MILE POINT-UNIT 2
UPDATED SAFETY ANALYSIS REPORT

SOURCE: PID-13A-15
TITLE: REACTOR BUILDING CLOSED LOOP COOLING WATER

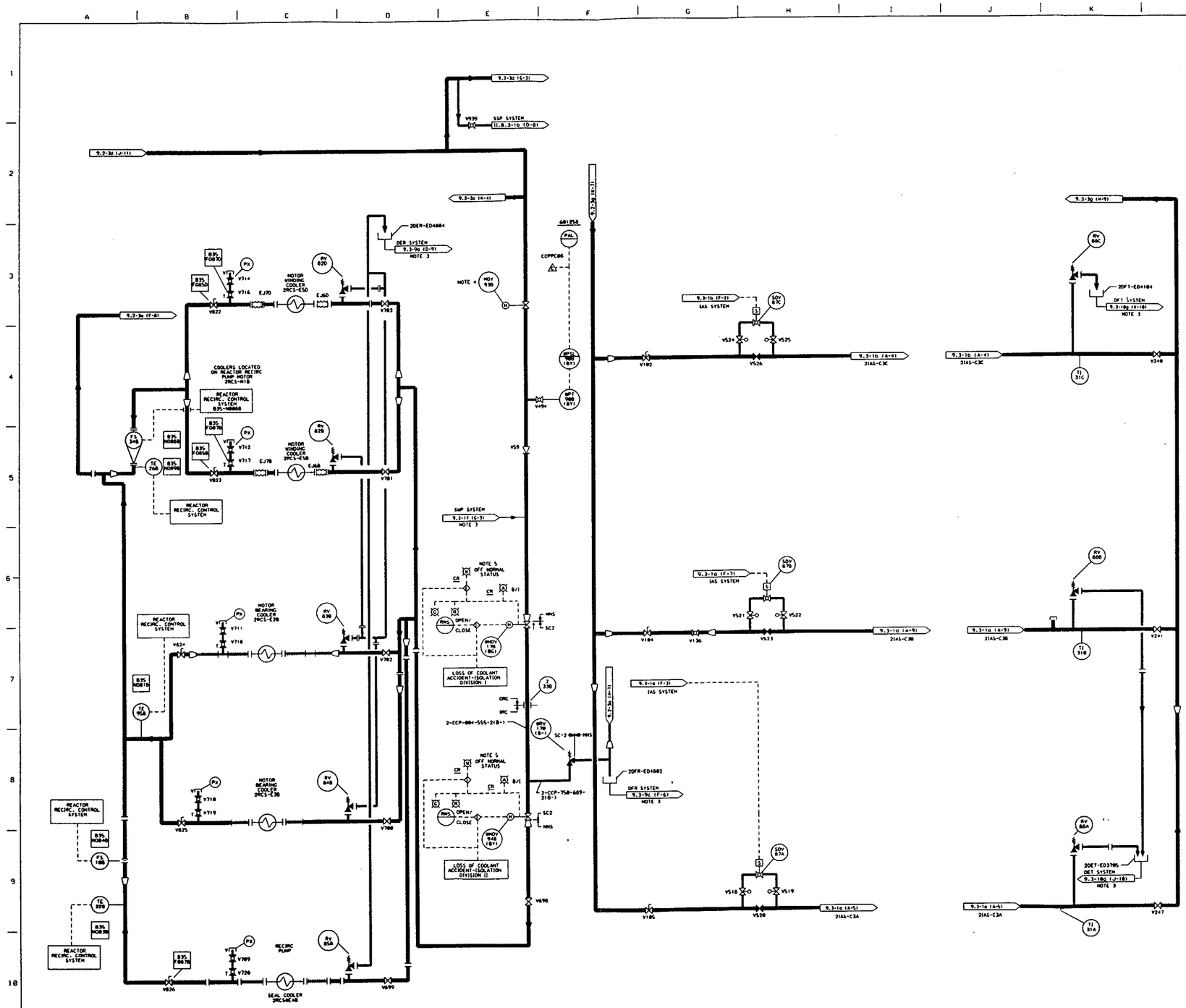

NOTES.

1. ALL INSTRUMENTS AND EQUIPMENT NUMBERS TO BE PREFIXED WITH "2CCP-" EXCEPT WHERE A DIFFERENT PREFIX IS SHOWN. AN ASTERISK (*) WILL REPLACE THE DASH (-) IN THE PREFIX FOR EQUIPMENT OR INSTRUMENTS WHICH ARE A PART OF NUCLEAR SAFETY FEATURES SYSTEM.
2. C.E. IDENTIFICATION NUMBERS ARE SHOWN IN SQUARES.
3. NO FLAG SHOWN ON CORRESPONDING DOCUMENT. COORDINATES PROVIDE INTERFACE LOCATION.
4. VALVE IS NON-FUNCTIONAL, POWER SUPPLY IS DISCONNECTED.
5. OFF-NORMAL STATUS DISPLAY SYSTEM IS ABANDONED IN PLACE.

THIS DRAWING WAS PRODUCED ELECTRONICALLY. DO NOT MAKE ANY CHANGES MANUALLY.

FIGURE 9.2-3b

REACTOR BUILDING CLOSED LOOP COOLING WATER

NIAGARA MOHAWK POWER CORPORATION
NINE MILE POINT-UNIT 2
UPDATED SAFETY ANALYSIS REPORT

SOURCE. PID-13B-14
TITLE. REACTOR BUILDING CLOSED LOOP COOLING WATER

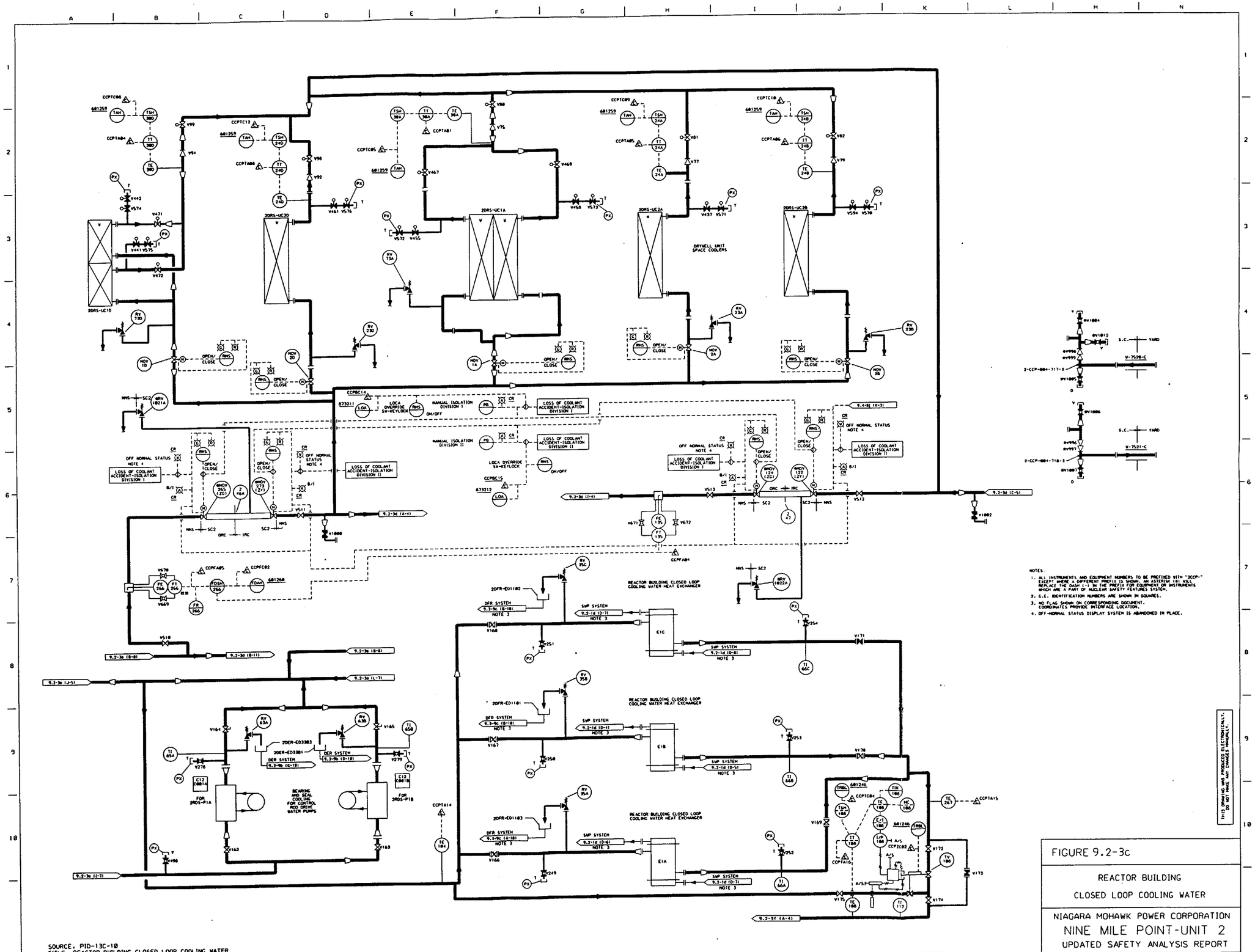

SOURCE: PID-13C-10
TITLE: REACTOR BUILDING CLOSED LOOP COOLING WATER

FIGURE 9.2-3c

REACTOR BUILDING
CLOSED LOOP COOLING WATER

NIAGARA MOHAWK POWER CORPORATION
NINE MILE POINT-UNIT 2
UPDATED SAFETY ANALYSIS REPORT

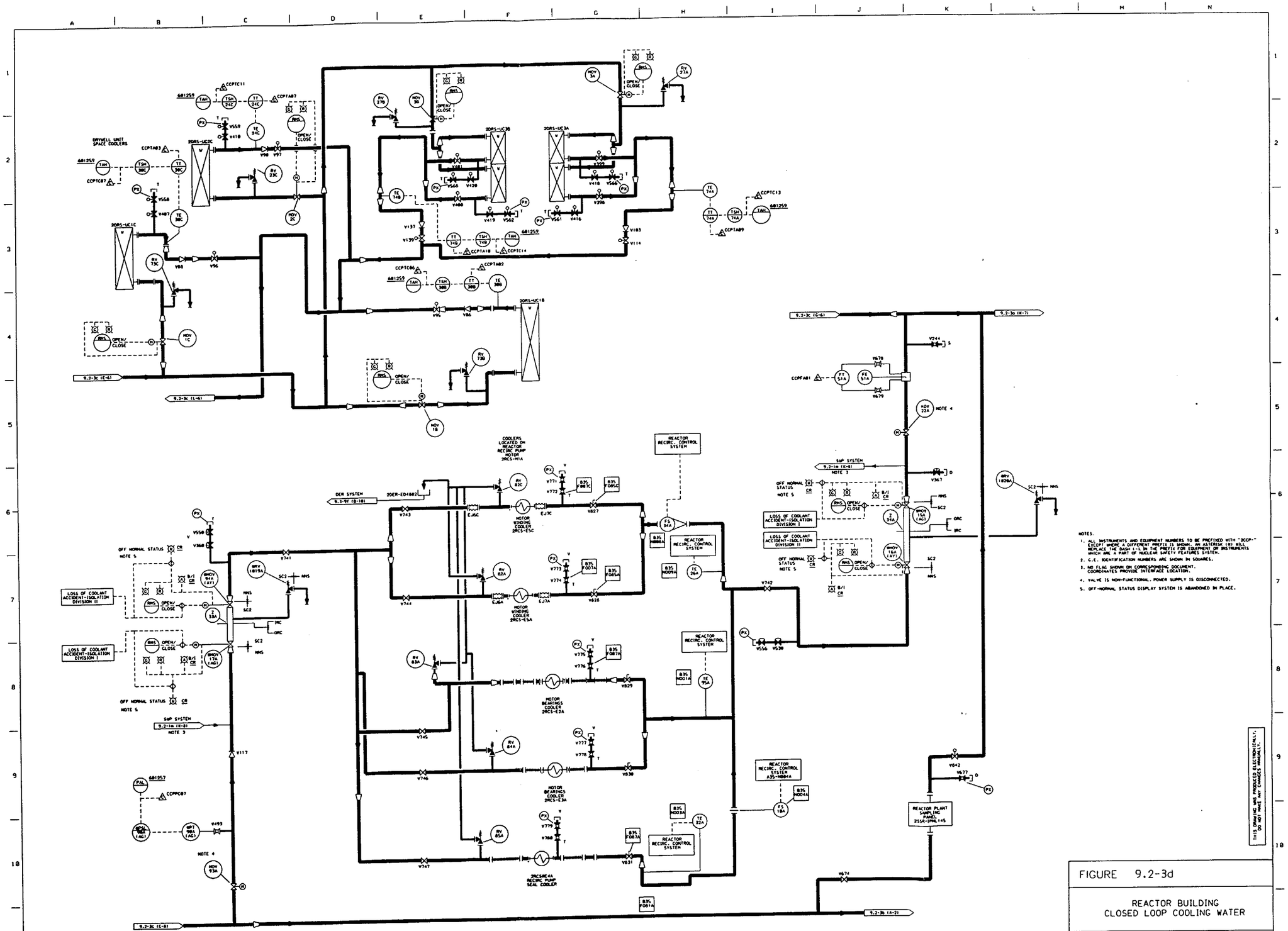

NOTES.

1. ALL INSTRUMENTS AND EQUIPMENT NUMBERS TO BE PREFIXED WITH "2CCP-" EXCEPT WHERE A DIFFERENT PREFIX IS SHOWN. AN ASTERISK (*) WILL REPLACE THE DASH (-) IN THE PREFIX FOR EQUIPMENT OR INSTRUMENTS WHICH ARE A PART OF NUCLEAR SAFETY FEATURES SYSTEM.
2. G.E. IDENTIFICATION NUMBERS ARE SHOWN IN SQUARES.
3. NO FLAG SHOWN ON CORRESPONDING DOCUMENT. COORDINATES PROVIDE INTERFACE LOCATION.
4. VALVE IS NON-FUNCTIONAL. POWER SUPPLY IS DISCONNECTED.
5. OFF-NORMAL STATUS DISPLAY SYSTEM IS ABANDONED IN PLACE.

FIGURE 9.2-3d

REACTOR BUILDING
CLOSED LOOP COOLING WATER

NIAGARA MOHAWK POWER CORPORATION
NINE MILE POINT-UNIT 2
UPDATED SAFETY ANALYSIS REPORT

SOURCE. 12177-PID-13D-12
TITLE. REACTOR BUILDING CLOSED LOOP COOLING WATER

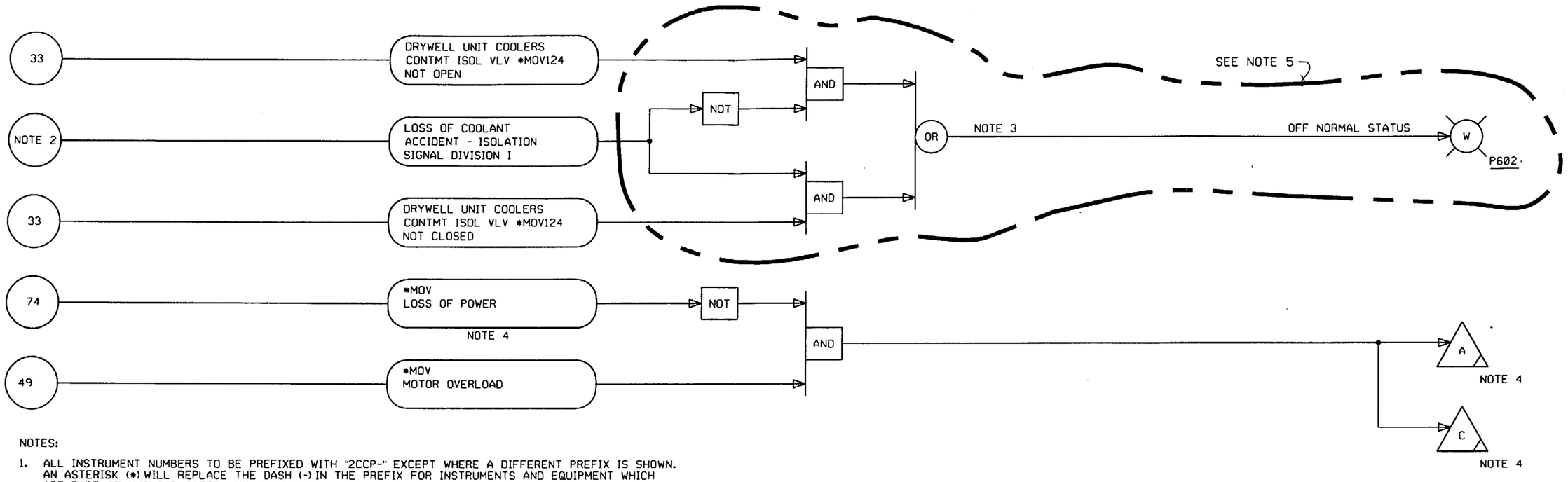

NOTES:

1. ALL INSTRUMENT NUMBERS TO BE PREFIXED WITH "2CCP-" EXCEPT WHERE A DIFFERENT PREFIX IS SHOWN. AN ASTERISK (*) WILL REPLACE THE DASH (-) IN THE PREFIX FOR INSTRUMENTS AND EQUIPMENT WHICH ARE PART OF NUCLEAR SAFETY FEATURES SYSTEM.
2. SEE LSK-27-19 FOR LOSS OF COOLANT ACCIDENT - ISOLATION SIGNAL LOGIC DEVELOPMENT.
3. LOGIC FOR OFF NORMAL STATUS DIVISION I, *MOV124 IS DESCRIBED. LOGIC IS SIMILAR FOR FOLLOWING *MOV'S:

DIVISION I	DIVISION II
*MOV265	*MOV122
*MOV17A	*MOV273
*MOV17B	*MOV16A
*MOV15A	*MOV16B
*MOV15B	*MOV94A
	*MOV94B

4. ASSOCIATED EQUIPMENT, COMPUTER AND ANNUNCIATOR WINDOW NUMBERS:

DIVISION I VALVE	COMPUTER PT	WINDOW	DIVISION II VALVE	COMPUTER PT	WINDOW
*MOV14A	CCPTC39	873424	*MOV14B	CCPTC40	875424
*MOV18A	CCPTC39	873424	*MOV18B	CCPTC40	875424
*MOV265	CCPTC49	873223	*MOV273	CCPTC50	873223
*MOV124	CCPTC49	873223	*MOV122	CCPTC50	873223
*MOV22A	CCPTC41	602221	*MOV22B	CCPTC42	602221
*MOV93A	CCPTC41	602221	*MOV93B	CCPTC42	602221
*MOV17A	CCPTC41	602221	*MOV94A	CCPTC42	602221
*MOV17B	CCPTC41	602221	*MOV94B	CCPTC42	602221
*MOV15A	CCPTC41	602221	*MOV16A	CCPTC42	602221
*MOV15B	CCPTC41	602221	*MOV16B	CCPTC42	602221

5. OFF-NORMAL STATUS DISPLAY SYSTEM IS ABANDONED IN PLACE.

SOURCE: LSK- 9-1J

FIGURE 9.2-4

REACTOR BUILDING CLOSED LOOP COOLING WATER SYSTEM LOGIC DIAGRAM SHEET 9 OF 12

SETPOINTS SHOWN ON LOGIC DIAGRAMS ARE FOR LOGIC CLARIFICATION ONLY AND MAY BE ONLY APPROXIMATIONS OF THE ACTUAL PROCESS SETPOINT. REFER TO SETPOINT DATA SHEETS FOR ACTUAL PROCESS SETPOINTS.

NIAGARA MOHAWK POWER CORP.
NINE MILE POINT-UNIT 2
UPDATED SAFETY ANALYSIS REPORT

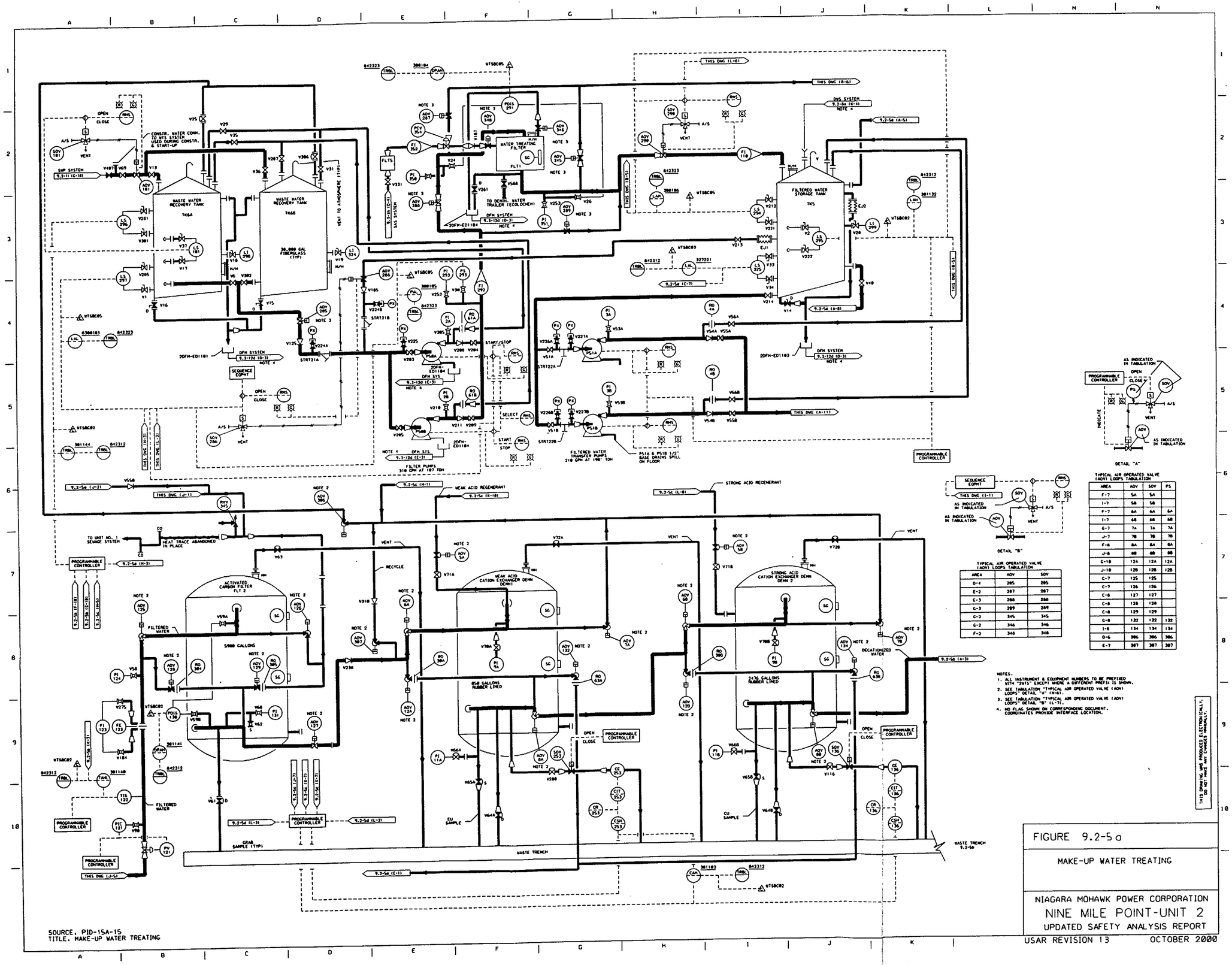

TYPICAL AIR OPERATED VALVE (AOV) LOOPS TABULATION

AREA	AOV	SOV	PS
F-7	5A	5A	
I-7	5B	5B	
F-7	6A	6A	6A
I-7	6B	6B	6B
G-7	7A	7A	7A
J-7	7B	7B	7B
F-6	8A	8A	8A
J-6	8B	8B	8B
C-10	12A	12A	12A
J-10	12B	12B	12B
C-7	125	125	
C-7	126	126	
C-8	127	127	
C-8	128	128	
C-8	129	129	
G-8	132	132	132
I-8	134	134	134
D-6	386	386	386
E-7	387	387	387

TYPICAL AIR OPERATED VALVE (AOV) LOOPS TABULATION

AREA	AOV	SOV
D-4	285	285
E-2	287	287
E-3	288	288
G-3	289	289
C-2	345	345
G-2	346	346
F-2	348	348

NOTES.
1. ALL INSTRUMENT & EQUIPMENT NUMBERS TO BE PREFIXED WITH "2WTS" EXCEPT WHERE A DIFFERENT PREFIX IS SHOWN.
2. SEE TABULATION "TYPICAL AIR OPERATED VALVE (AOV) LOOPS" DETAIL "A" (H-6).
3. SEE TABULATION "TYPICAL AIR OPERATED VALVE (AOV) LOOPS" DETAIL "B" (L-7).
4. NO FLAG SHOWN ON CORRESPONDING DOCUMENT. COORDINATES PROVIDE INTERFACE LOCATION.

THIS DRAWING WAS PRODUCED ELECTRONICALLY. DO NOT MODIFY MANUALLY.

SOURCE. PID-15A-15
TITLE. MAKE-UP WATER TREATING

FIGURE 9.2-5a

MAKE-UP WATER TREATING

NIAGARA MOHAWK POWER CORPORATION
NINE MILE POINT-UNIT 2
UPDATED SAFETY ANALYSIS REPORT

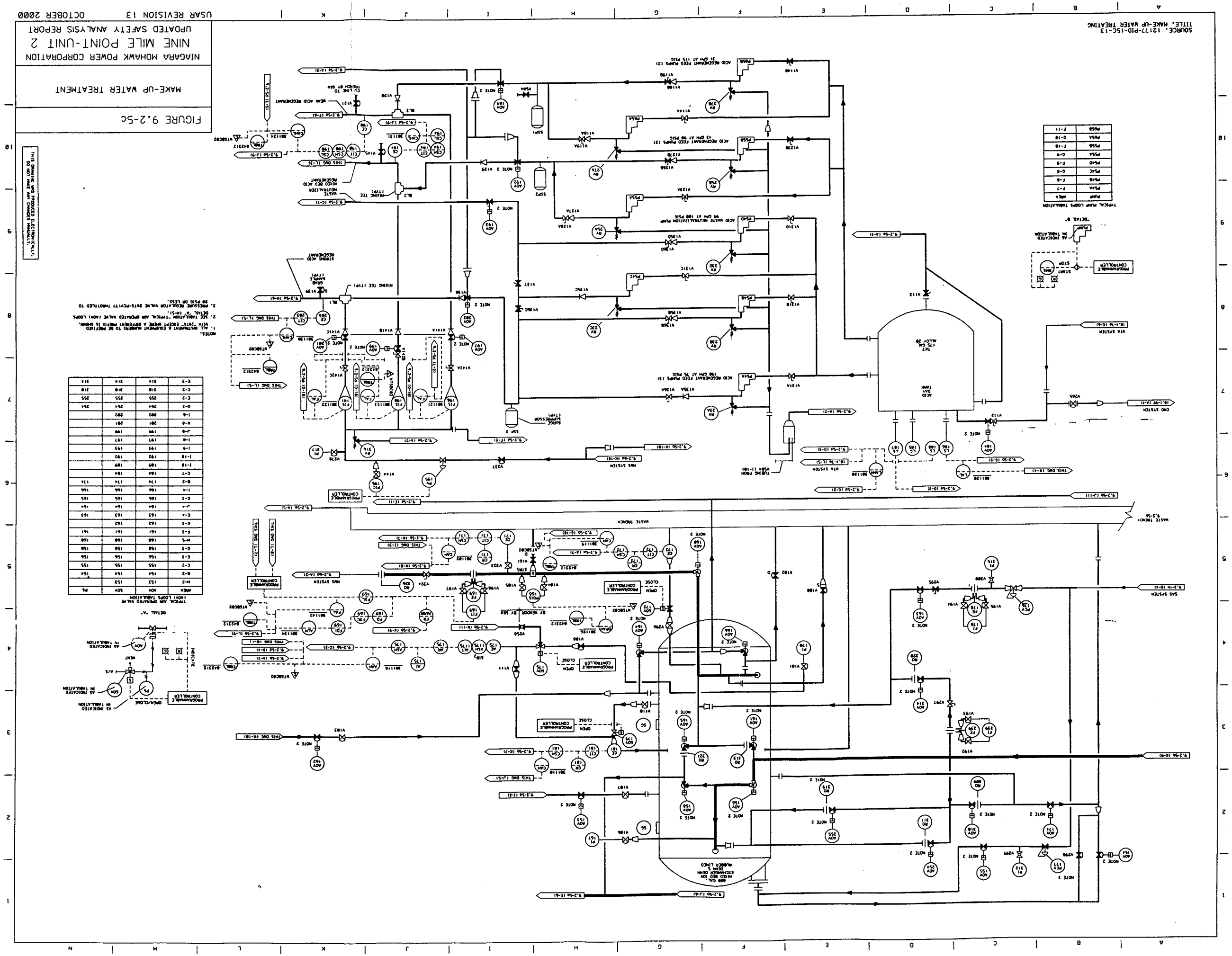

THIS DRAWING WAS PRODUCED ELECTRONICALLY. DO NOT MAKE ANY CHANGES MANUALLY.

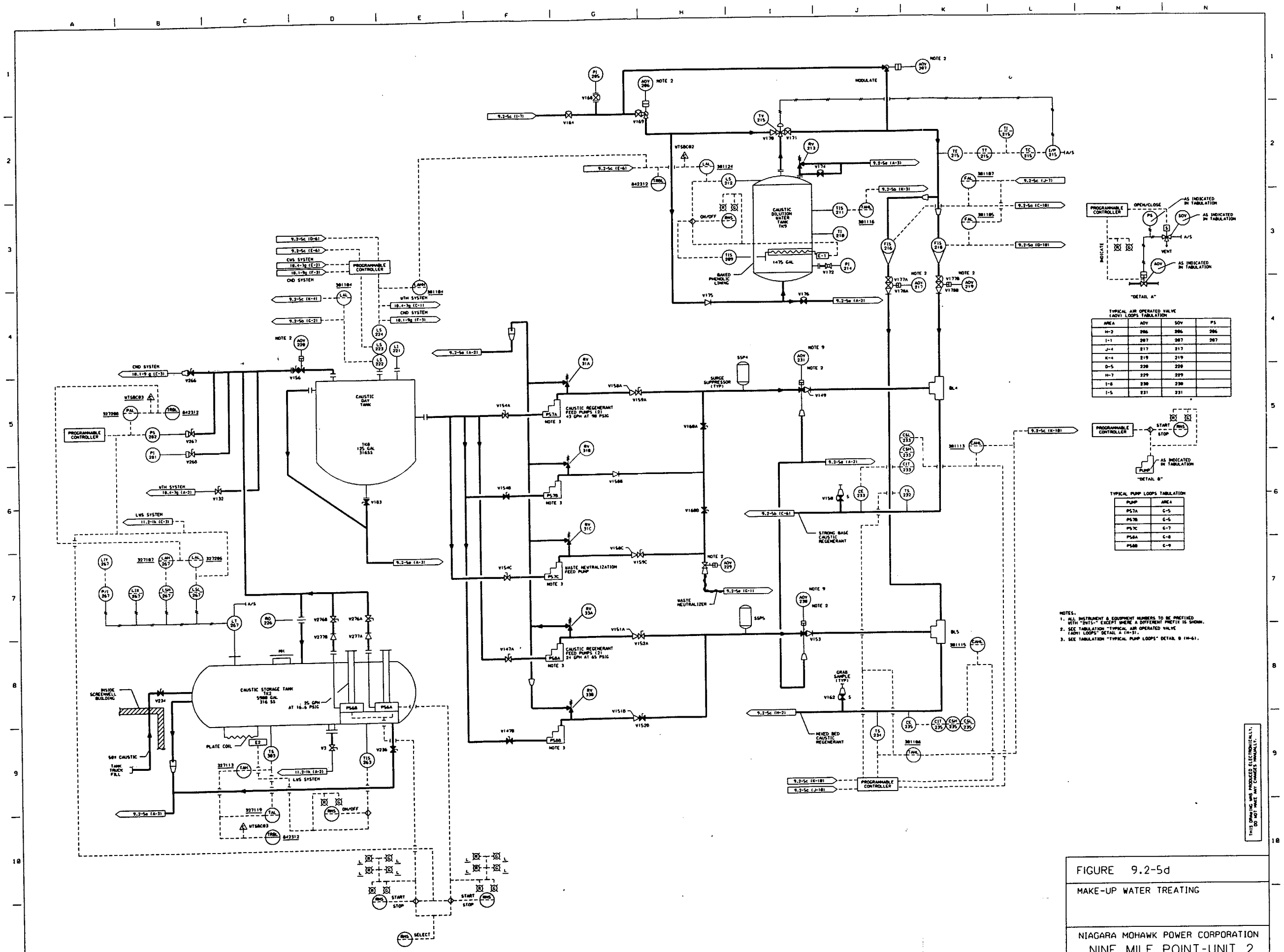

SOURCE. PID-150-9
TITLE. MAKE-UP WATER TREATING

FIGURE 9.2-5d

MAKE-UP WATER TREATING

NIAGARA MOHAWK POWER CORPORATION
NINE MILE POINT-UNIT 2
UPDATED SAFETY ANALYSIS REPORT

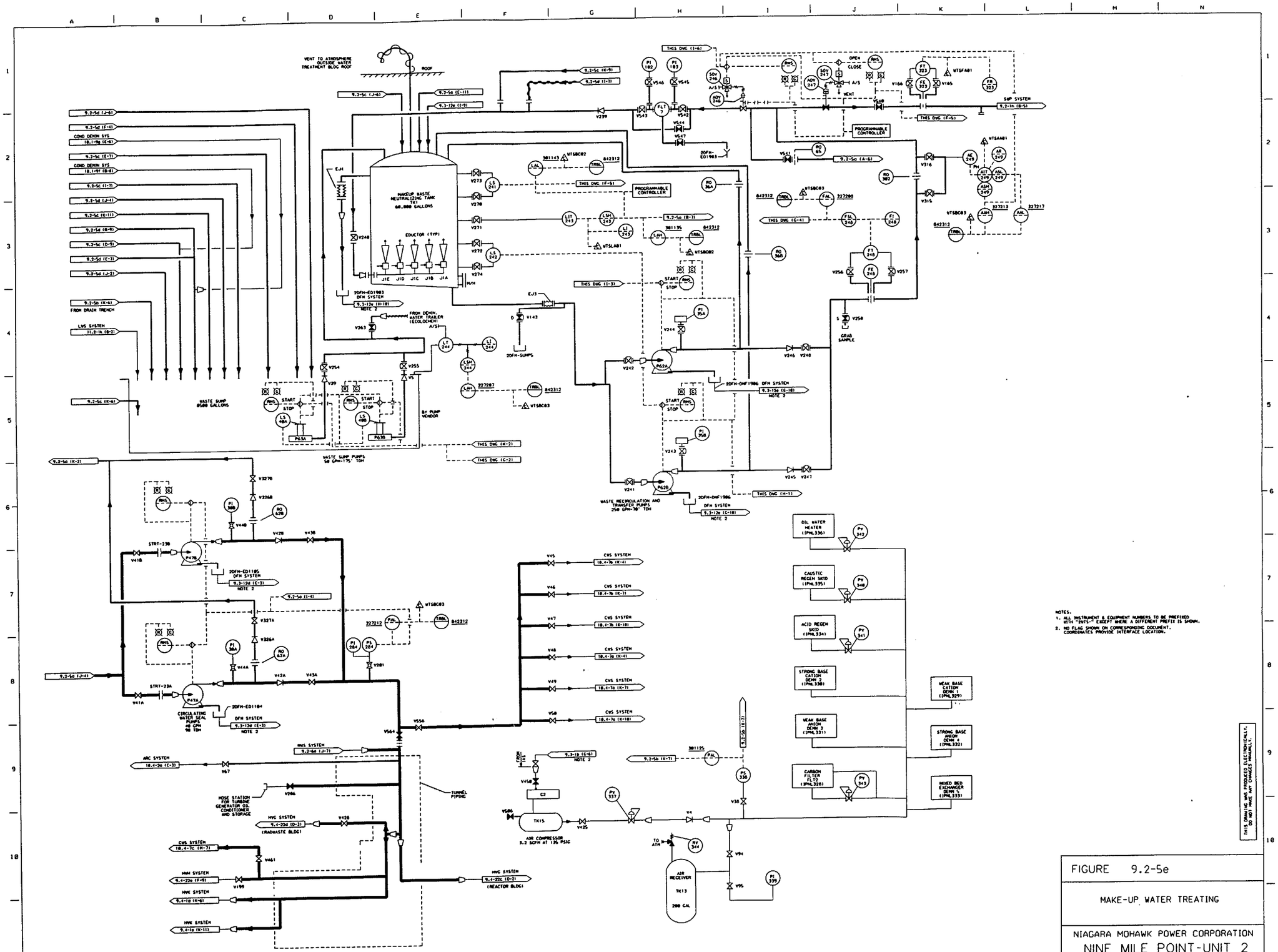

NOTES:
1. ALL INSTRUMENT & EQUIPMENT NUMBERS TO BE PREFIXED WITH "2VTS-" EXCEPT WHERE A DIFFERENT PREFIX IS SHOWN.
2. NO FLAG SHOWN ON CORRESPONDING DOCUMENT. COORDINATES PROVIDE INTERFACE LOCATION.

THIS DRAWING WAS PRODUCED ELECTRONICALLY. DO NOT MAKE ANY CHANGES MANUALLY.

SOURCE: PID-15E-19
TITLE: MAKE-UP WATER TREATING

FIGURE 9.2-5e

MAKE-UP WATER TREATING

NIAGARA MOHAWK POWER CORPORATION
NINE MILE POINT-UNIT 2
UPDATED SAFETY ANALYSIS REPORT

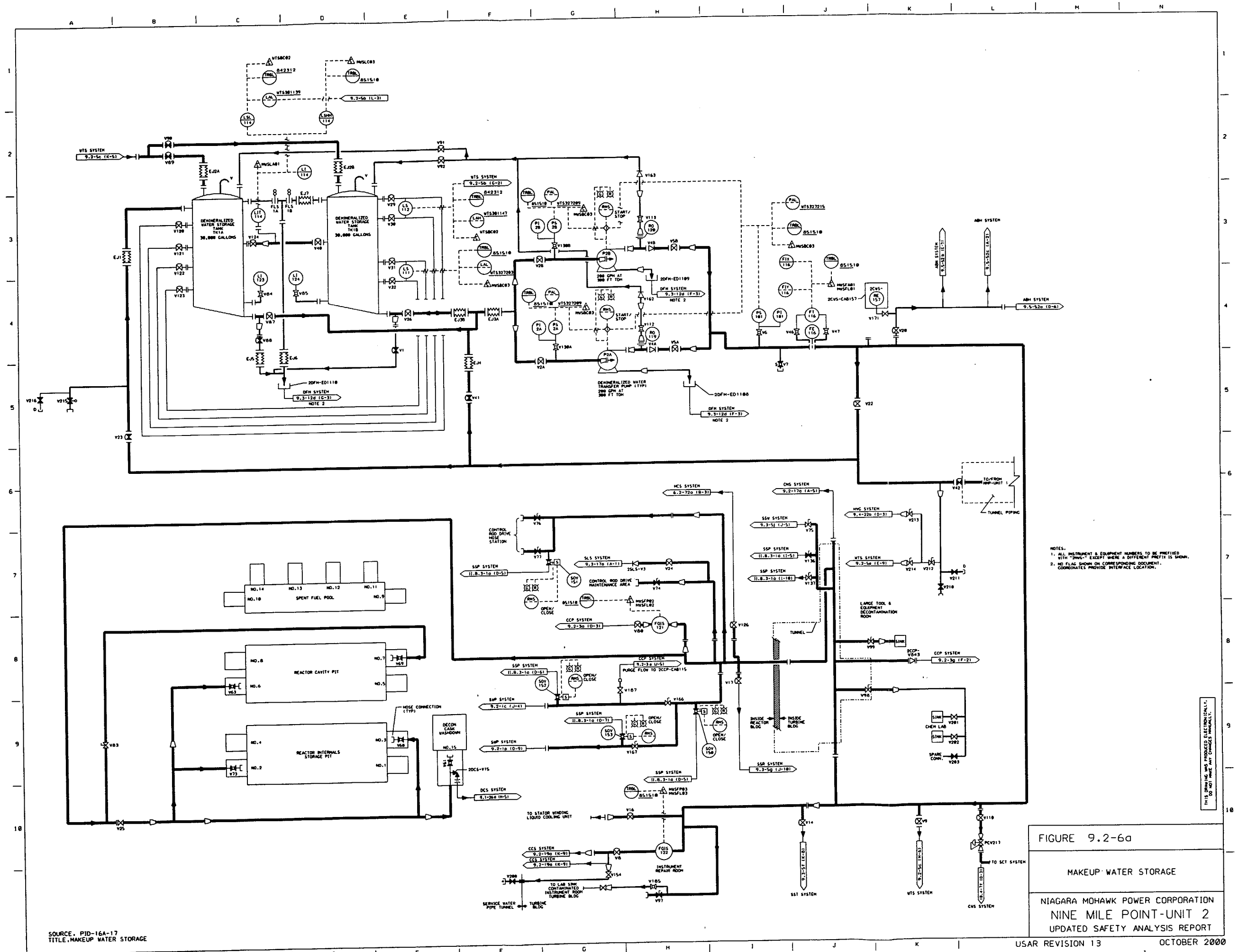

SOURCE: P1D-16A-17
TITLE: MAKEUP WATER STORAGE

FIGURE 9.2-6a

MAKEUP WATER STORAGE

NIAGARA MOHAWK POWER CORPORATION
NINE MILE POINT-UNIT 2
UPDATED SAFETY ANALYSIS REPORT

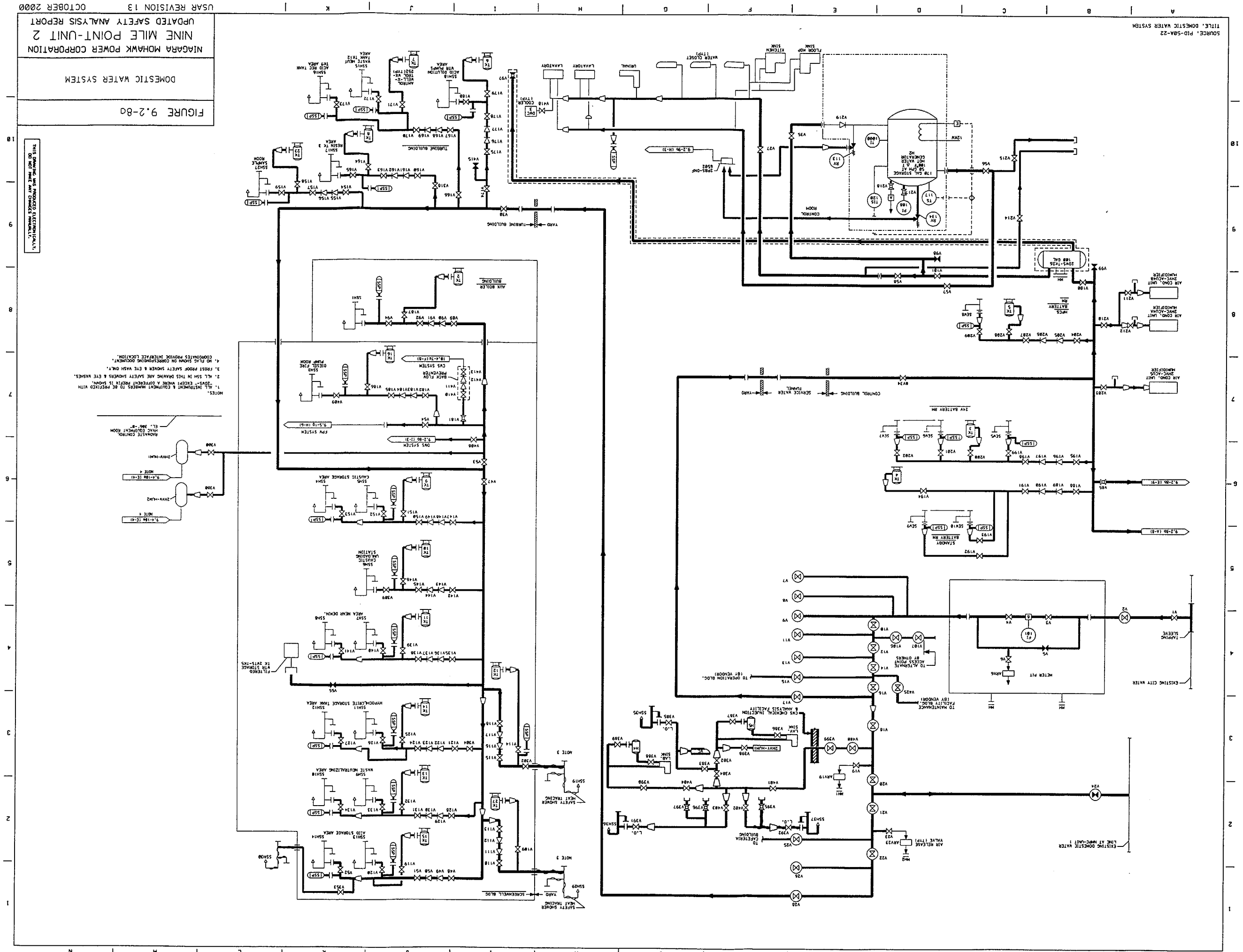
NIAGARA MOHAWK POWER CORPORATION
NINE MILE POINT-UNIT 2
UPDATED SAFETY ANALYSIS REPORT
DOMESTIC WATER SYSTEM
FIGURE 9.2-8a
THIS DRAWING WAS PRODUCED ELECTRONICALLY. DO NOT MAKE ANY CHANGES MANUALLY.
NOTES:
1. ALL INSTRUMENT & EQUIPMENT NAMEPLATES TO BE PREFIXED WITH "20VS-" EXCEPT WHERE A DIFFERENT PREFIX IS SHOWN.
2. ALL SSH IN THIS DRAWING ARE SAFETY SHOWERS & EYE WASHES.
3. FROST PROOF SAFETY SHOWER & EYE WASH ONLY.
4. DUE NO PLAN SHOWN ON COMPRESSOR/AIR DOCUMENT, COORDINATES PROVIDE INTERFACE LOCATION.
TURBINE BUILDING
CONTROL ROOM
CONTROL BUILDING
SERVICE WATER TUNNEL
YARD
SCREENHOUSE BLDG.
AUX BOILER BUILDING
DWS SYSTEM
FPW SYSTEM
CWS SYSTEM
BACK FLOW PREVENTER
DIESEL FIRE PUMP ROOM
24V BATTERY RM
STANDBY BATTERY RM
HPCS BATTERY RM
CAUSTIC STORAGE AREA
CAUSTIC UNLOADING STATION
HYPOCHLORITE STORAGE TANK AREA
WASTE NEUTRALIZING AREA
ACID STORAGE AREA
FILTERED WTR STORAGE TK 2VTS-TK5
SAFETY SHOWER NEAR TRACING
EXISTING CITY WATER
EXISTING DOMESTIC WATER LINE AT NMPC-UNIT 1
METER PIT
TO MAINTENANCE FACILITY BLDG. (BY VENDOR)
TO OPERATION BLDG. (BY VENDOR)
TO ALTERNATE ACCESS POINT BY OTHERS
CWS CHEMICAL INJECTION & ANALYSIS FACILITY
TO CAFETERIA BUILDING
AIR RELEASE VALVE (TYP)
LAVATORY
URINAL
WATER CLOSET
KITCHEN SINK
FLOOR MOP SINK
COOLER (TYP)
TITLE: DOMESTIC WATER SYSTEM
SOURCE: PID-SOA-22

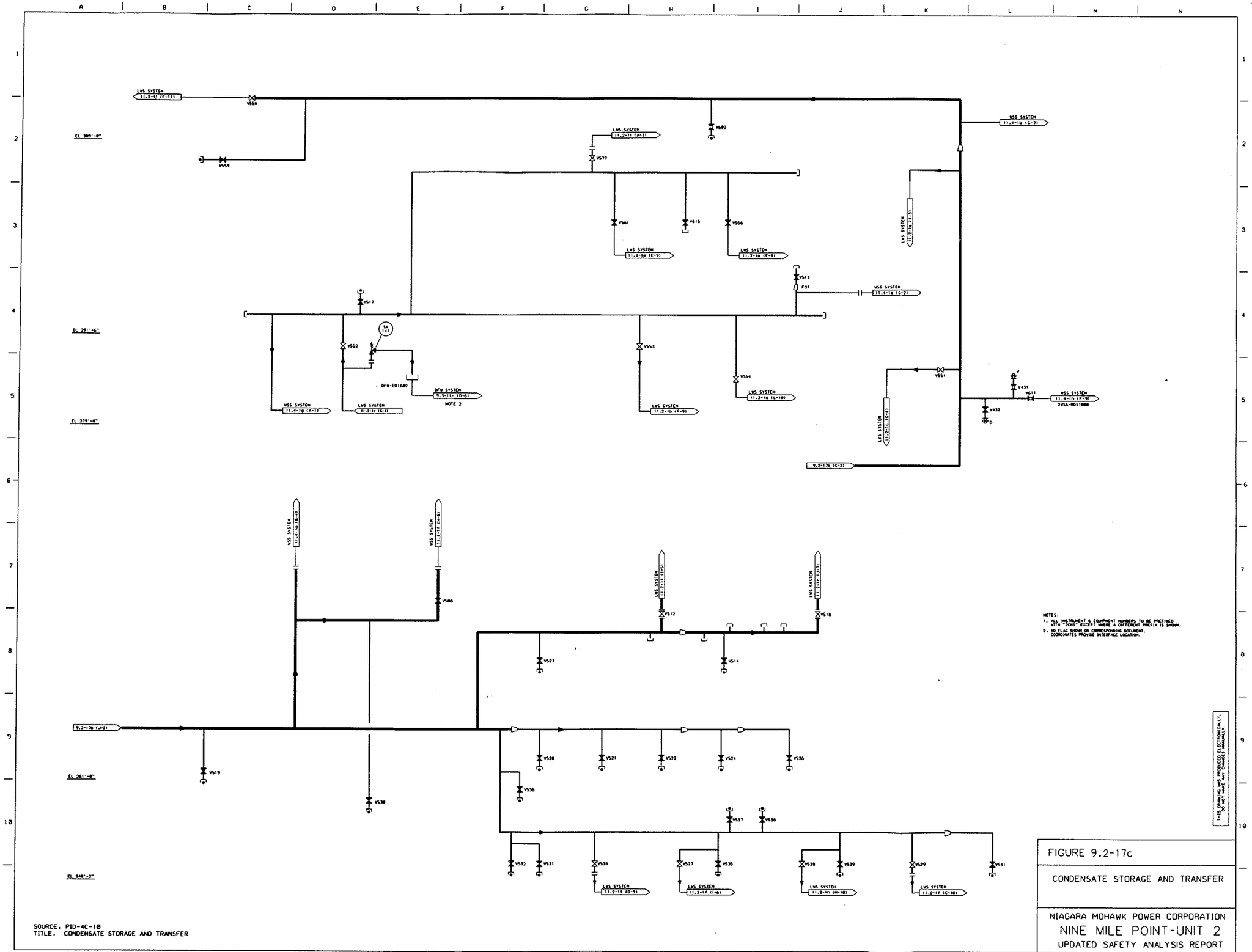

NOTES:
1. ALL INSTRUMENT & EQUIPMENT NUMBERS TO BE PREFIXED WITH "2CNS" EXCEPT WHERE A DIFFERENT PREFIX IS SHOWN.
2. NO FLAG SHOWN ON CORRESPONDING DOCUMENT. COORDINATES PROVIDE INTERFACE LOCATION.

THIS DRAWING WAS PRODUCED ELECTRONICALLY. DO NOT MAKE ANY CHANGES MANUALLY.

SOURCE: PID-4C-10
TITLE: CONDENSATE STORAGE AND TRANSFER

FIGURE 9.2-17c

CONDENSATE STORAGE AND TRANSFER

NIAGARA MOHAWK POWER CORPORATION
NINE MILE POINT-UNIT 2
UPDATED SAFETY ANALYSIS REPORT

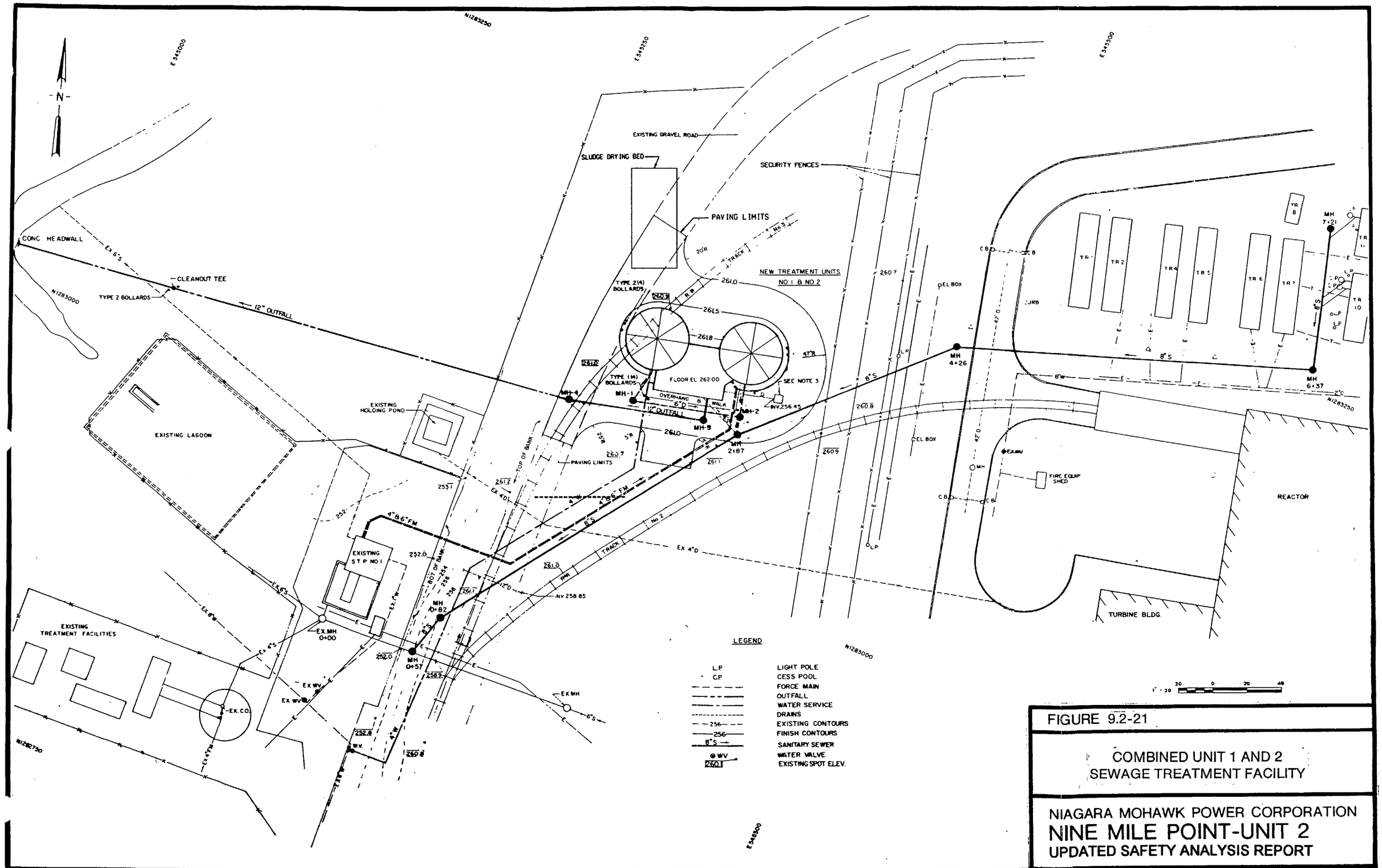

FIGURE 9.2-21

COMBINED UNIT 1 AND 2
SEWAGE TREATMENT FACILITY

NIAGARA MOHAWK POWER CORPORATION
NINE MILE POINT-UNIT 2
UPDATED SAFETY ANALYSIS REPORT

UPDATED SAFETY ANALYSIS REPORT

NINE MILE POINT NUCLEAR STATION — UNIT 2

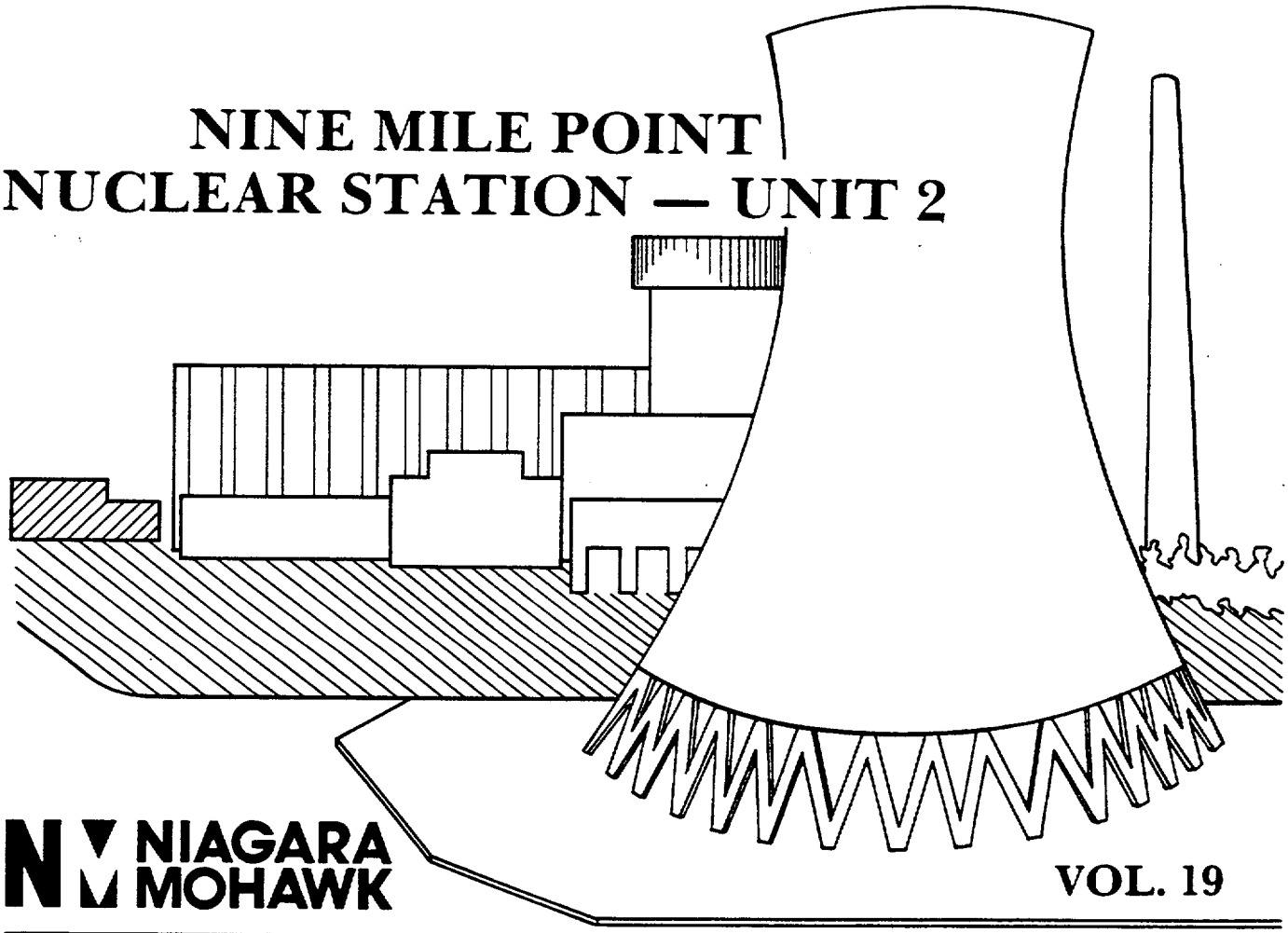

NIAGARA MOHAWK

VOL. 19

two units in the automatic mode as the lag and backup units. The lag compressor will automatically start when the compressed air supply header pressure decays to the low-pressure setpoint. Similarly, the backup compressor will automatically start when the air supply header pressure decreases to the low-low setpoint.

The instrument air compressors can be stopped manually. An automatic compressor stop signal is initiated by any of the following: high HP inlet air temperature, high oil temperature, high LP outlet air temperature, high HP outlet air temperature, low lubrication oil pressure after a 15-sec time delay, drive motor overload, vent fan motor overload, sustained power bus undervoltage, instantaneous/time overcurrent electrical fault.

Monitoring

Control room indicators and alarms are provided as follows:

1. Running (red) and stopped (green) indicating lights for instrument air compressors.

2. Pressure indicator for the IAS instrument air receiving tank.

3. Annunciators for the following:

   a. Instrument air compressor autotrip/fail to start.

   b. Instrument air compressor autostart.

   c. Instrument air trouble.

   d. Instrument air TK2 pressure low.

   e. Instrument air TK3 pressure low.

9.3.1.2 Service Air System

9.3.1.2.1 Design Bases

Safety Design Basis

The SAS is not required to effect or support the safe shutdown of the reactor or to perform in the operation of reactor safety features. However, all items contained within Category I areas are seismically analyzed and supported for SSE conditions so that failures will not damage safety-related equipment. For the containment penetrations, see Section 3.2.

Power Generation Design Basis

The SAS is designed to provide service air to plant services at 80 to 100 psig.

9.3.1.2.2 System Description

The compressed air supply to the SAS is provided by the same three air compressors that supply the IAS (Section 9.3.1.1). Service air is supplied from the common compressed air supply header upstream of or downstream from the instrument air refrigerant dryers. This allows service air to be supplied with dry air from the dryers or with air that has not been through the dryers to lessen the air dryer load.

Service air is distributed to various plant areas by supply branch headers, each fitted with normal root valves. The service air piping at each building is designed in a loop arrangement. Typically piping terminals at the service air stations are provided with a ball valve and a 1/2-in or larger hose coupling. There are swing-type check valves at all interfaces between the IAS and the SAS to prevent reverse flow. Primary containment penetrations have one isolation valve inside the primary containment and one outside, in accordance with 10CFR50 Appendix A. Flexible hoses with quick disconnect couplings are part of the design arrangement. When the unit is on-line, the SAS is disconnected from the primary containment by way of these flexible hoses. This ensures that air cannot enter the containment.

9.3.1.2.3 Safety Evaluation

During normal power plant operation, the primary containment isolation valves are closed and the flexible hoses are disconnected from the service air supply. As a result, the piping within the containment will be isolated. In an accident condition the containment temperature may rise, increasing the piping internal pressures. Therefore, piping inside the primary containment is protected by thermal relief valves. The piping outside the primary containment is protected by the air compressor and receiver relief valves. Piping in Category I areas has been designed so that its failure will prevent damage to safety-related equipment. With the exception of the containment penetrations and isolation valves, the SAS is nonsafety related.

9.3.1.2.4 Inspection and Testing Requirements

No special inspection and testing are required following preoperational testing except for Appendix J testing (Section 6.2) and ISI of the containment penetrations (Section 6.6).

9.3.1.2.5 Instrumentation Requirements

Description

The air supply for the SAS is provided by the IAS. The only controls and monitors for the SAS are an instrument air/service air-operated isolation (globe) valve and its associated alarm

which is located in the main control room. The control logic is shown on Figure 9.3-2.

Operation

In the normal mode, the SAS isolation valve can be opened locally at LCS738 only if a low-low pressure condition does not exist. The valve will close automatically on low-low pressure. The valve can be opened and closed manually.

Monitoring

An alarm is provided for SAS isolation valve closure.

9.3.1.3 Breathing Air System

The AAS provides clean, dry, oil-free air to various areas throughout the plant for breathing.

9.3.1.3.1 Design Bases

Safety Design Bases

The AAS is not required to effect or support safe shutdown of the reactor or to perform in the operation of reactor safety features. However, all items contained in Category I areas are seismically analyzed and supported for SSE conditions so that their failure will not damage safety-related equipment. For containment penetrations, see Section 3.2.

Operational Design Basis

The AAS has been designed to provide air suitable for breathing at selected breathing air stations for use by unit personnel during potential or actual airborne contamination situations.

9.3.1.3.2 System Description

Compressed air is supplied to the AAS by the same three air compressors that supply the IAS (Section 9.3.1.1). Breathing air is supplied from the common compressed air supply header upstream of the instrument air refrigerant dryers.

Air quality is maintained by an in-line, four-stage filtration unit that removes oil, water, particulates, and carbon monoxide, and delivers clean air that meets OSHA requirements for breathing air.

During normal unit power operation, breathing air piping within the primary containment will be physically disconnected by a flexible hose connection and isolated by valves inside and outside the containment.

Each breathing air station consists of an isolation valve, a pressure regulator with a pressure gauge, a particulate filter with a relief valve, a manifold assembly, and one-way shutoff couplings.

9.3.1.3.3 Safety Evaluation

The AAS is not required to effect or support safe shutdown of the reactor. The piping within the containment is protected from overpressure by thermal relief valves as are the piping and equipment outside the containment. All items contained within Category I areas are supported so that their failure during a SSE will not damage any safety-related equipment.

Originally, the FMEA for the containment penetrations and isolation valves of the AAS was contained in the Unit 2 FSAR FMEA document, which is historical. FMEAs for plant systems are now performed and controlled by the design process.

9.3.1.3.4 Testing and Inspection

Equipment is inspected and system performance is verified periodically and after maintenance. In addition, the containment penetrations are subject to Appendix J testing (Section 6.2) and ISI (Section 6.6).

9.3.1.3.5 Instrumentation Requirements

Description

Instruments are provided for the AAS. The monitors are located in the main control room. The logic is shown on Figure 9.3-4.

Operation

The AAS is supplied by the IAS through a pressure-reducing station. The pressure-reducing station includes manual isolation valves, a pressure-reducing valve, and a manual bypass valve. When the AAS is required, the normally closed manual isolation valves will be opened. The pressure-reducing valve is manually set to deliver 85 psig air to the AAS. The air will be filtered and routed through dryers to ensure proper air quality is maintained. In addition, a receiver tank is provided near the tie-in from the IAS to ensure that the pressure of the breathing air is maintained as designed.

Monitoring

An indicator is provided for breathing air header pressure.

Alarms are provided for:

1. Breathing air and header pressure high or low (common alarm).

2. Reactor building accumulator tank pressure low (common alarm).

THIS PAGE INTENTIONALLY BLANK

9.3.1.4 Automatic Depressurization System

9.3.1.4.1 Design Bases

Safety Design Bases

The ADS is required to effect or support the safe shutdown of the reactor or to perform operational functions associated with the reactor safety system.

Main steam blowdown from a selected group of seven designated ADS SRVs, consisting of three or four SRVs in each of two subgroups. The operation of ADS, with the low-pressure coolant injection (LPCI) mode of the RHR system and/or LPCS system, functions as an alternate to the operation of the HPCS system for protection against fuel cladding damage upon LOCA. The blowdown of the main steam SRVs provides depressurization of the RPV, permitting the operation of the LPCI mode and/or the LPCS. Blowdown is activated automatically upon a signal of low reactor vessel water level (trip level-1) by the ADS. The ADS can be manually initiated or automatic initiation disabled from the Station main control room at any time.

The ADS is independently supplied with nitrogen gas (although the IAS system designation has been retained) from the high-pressure GSN system. All pressure-retaining components, piping, valves, and fittings in the ADS are seismically analyzed and supported in accordance with SSE design requirements. The system is designed to be functional in the event of a SSE.

The ADS is safety related, and all pressure-retaining components of the system are designed, constructed, and inspected in accordance with the applicable requirements of ASME Section III, Division 1, Subsection ND for Class 3 components, and Subsection NC for Class 2 components. Not included in this safety-related classification are the nitrogen gas storage tanks, equipment, and components located in the yard outside the reactor building.

Piping segments that penetrate the primary containment and serve as a containment boundary are designed to Safety Class 2, Category I requirements.

The loss of nitrogen gas for instrumentation and controls causes gas-operated valves to fail to appropriate safe positions. In the event that the nitrogen gas supply from the nitrogen gas storage tanks is lost, a 5-day supply is available to the accumulators from ADS nitrogen receiver tanks 2IAS*TK4(Z-) and 2IAS*TK5(Z-). In addition, there are provisions for recharging the ADS nitrogen receiver tanks through its individual supply lines located in a missile-protected area outside the standby gas treatment building from special emergency tube trailer supply connections. These special, emergency recharging lines are part of the GSN system and are classified seismic Category I, Safety Class 3.

Power Generation Bases

The ADS requires clean, dry, oil-free nitrogen gas at approximately 170 psig to be supplied to the selected group of seven main steam SRVs and their respective accumulators located inside the reactor primary containment. This designated group of ADS SRVs and accumulators is divided into two subgroups with three or four valves and accumulators in each subgroup. Each subgroup is supplied with nitrogen gas from one of two separate ADS receiver tanks. Each ADS receiver tank is supplied with nitrogen gas at 355 psig from a bank of six horizontal, high-pressure nitrogen gas storage tanks located outside the reactor building. Nitrogen gas supplied for instrumentation and controls meets or exceeds the equivalent air quality requirements established for safety-related control air systems (SRCAS) by ANSI MC11.1-1975 (approved January 15, 1976) (ISA-S7.3), Quality Standard for Instrument Air.

NOTE: Since all safety-related components that use air or nitrogen have a particle size limit of no greater than 40 microns, Unit 2 will take exception to the ANSI MC11.1-1976 particle size limit. The new Unit 2 limit for particle size is 40 microns.

All piping, valves, and fittings associated with the ADS are of stainless steel materials. Also, the system will be given a complete preoperational cleaning until the applicable acceptance cleanliness levels are established and verified. In addition, since the piping system materials are corrosion-resistance, the cleanliness levels achieved during preoperational cleaning are expected to be maintained and controlled to within acceptable limits.

Each of the six high-pressure nitrogen gas storage vessels is designed, fabricated, tested, and stamped in accordance with the ASME Unfired Pressure Vessel Code, Section VIII, and conforms to Code Case No. 1205 for seamless integrally forged vessels. The six-vessel modular assembly is provided with manifold isolation valves which separate three active vessels and three reserve vessels. A fill stanchion is provided for refueling from a high-pressure tube trailer.

9.3.1.4.2 System Description

The ADS is supplied with nitrogen gas from a bank of six horizontal, high-pressure nitrogen gas storage tanks located outside the reactor building. Nitrogen gas is supplied to two ADS nitrogen receiver tanks at 355 psig. Each ADS nitrogen receiver tank supplies nitrogen gas to its corresponding subgroup of either three or four ADS valves and accumulators through a 355/170 psig pressure-reducing station. These two ADS nitrogen receiver tanks provide makeup nitrogen to compensate for valve leakage losses and to maintain the required pressure at the accumulators.

A diaphragm-type ADS air compressor, originally provided to supply instrument quality air for testing purposes, has been abandoned in place.

9.3.1.4.3 Safety Evaluation

The two ADS nitrogen receiver tanks supplied by the bank of six horizontal nitrogen gas storage tanks will operate to maintain the ADS valve accumulator pressure at approximately 170 psig. The maximum/minimum analytical values for the pneumatic system are 186/160 psig, respectively (Three Mile Island [TMI] Issue II.K.3.28).

Each nitrogen gas accumulator provides a passive safeguard which automatically supplies a motive source for the operation of each SRV in the ADS. The failure of a pilot control valve in the valve actuators can only affect a single SRV. This is due to the independence of the other, and a postulated single failure does not prevent the operation of the remaining units. The design bases covering the SRVs include additional allowances for the malfunction of any one valve.

For inventory threatening events requiring ADS, once the reactor vessel has been depressurized by the ADS and the core has been reflooded, three operable ADS valves are sufficient to maintain the system pressure below the shutoff pressure of the emergency core cooling system (ECCS) pumps. Therefore, breaks outside the primary containment that result in reactor isolation and small line breaks require the full ADS for the longest period of time. Based on a review of the Unit 2 LOCA analysis, it was determined that the full ADS is required for 30 min following a LOCA.

The ADS is designed to withstand an accident environment and still perform its safety-related functions for 100 days following an accident. An emergency nitrogen tube trailer supply connection is provided in the system to ensure that this long-term ADS operational requirement is met.

Long-term post-accident operation requires only three of the seven valves to be operable. A single failure in one of the nitrogen gas supply lines will not prevent the ADS from performing its safety-related function in either the immediate or long-term modes.

Originally, the FMEA of the ADS was contained in the Unit 2 FMEA document, which is historical. FMEAs for plant systems are now performed and controlled by the design process.

9.3.1.4.4 Inspection and Testing Requirements

The ADS is normally available for operation. The required system operating pressures are maintained and monitored, and abnormal conditions are alarmed during normal plant operation.

The ADS will be tested in accordance with Table 14.2-52. To verify that the loss of nitrogen gas will not prevent the ADS from performing its safety-related function, a loss-of-nitrogen gas-supply test will be performed.

9.3.1.4.5 Instrumentation Requirements

Description

Instrumentation and controls are provided for the manual and automatic operation of the ADS system. The controls and monitors described below are located in the main control room.

Operation

The ADS primary containment isolation valves will close when any of the following exists: the control switch is placed in closed position, a LOCA isolation signal occurs and the LOCA keylock manual override control switch is in the reset position, or the manual isolation switch is activated.

The ADS primary containment isolation valves can be opened manually when both of the following exist: a LOCA isolation signal is absent or the LOCA keylock manual override is activated, and the primary containment manual isolation switch is in the reset position. Additionally, two ADS primary containment isolation valves which supply ADS accumulator tanks are controlled from the remote shutdown panel (RSP).

The ADS low flow solenoid-operated nitrogen gas supply valve, installed in parallel with the high flow solenoid-operated valve (SOV) at each of the two supply headers to the SRV accumulators, can be manually opened and closed. These low flow valves compensate for nitrogen gas losses from small, normal leakages in the ADS system and will automatically open when its header pressure decreases below the low-pressure setpoint and close when the header pressure is restored above the low-pressure setpoint.

Operation of the low flow control valve provides the assurance that a full inventory of nitrogen gas is available at the accumulators at all times to cycle the ADS SRVs, if required.

The ADS high flow SOV, installed in parallel with the low flow SOV at each of the two air supply headers to the SRV accumulators, can be manually opened and closed. The high flow air supply valve will automatically open when its header pressure decays below the high flow setpoint and close when the pressure is increased above the high flow setpoint.

Monitoring

Control room indicators and alarms are provided as follows:

1. Running (red) and stopped (green) indicating lights for the ADS air compressor (not used during normal plant operation).

2. Open (red) and closed (green) indicating lights for the following:

   a. ADS primary containment isolation valves.

   b. ADS header high flow valves.

   c. ADS header low flow valves.

3. Inoperable (amber) indicating lights for the following:

   a. ADS isolation valves bypass/inoperable.

   b. ADS control valve power failure.

   c. ADS systems manually out of service.

4. Pressure indicators for the following:

   a. ADS nitrogen supply headers.

   b. ADS nitrogen receiver tanks.

5. Annunciators for the following:

   a. ADS air compressor autotrip/fail to start (not used during normal plant operation).

   b. ADS air compressor autostart (not used during normal plant operation).

   c. Primary containment isolation valve power failure.

   d. ADS supply nitrogen systems bypassed or inoperable.

   e. Keylock LOCA override.

   f. ADS trouble.

   g. ADS nitrogen supply header pressure low.

   h. ADS primary containment manual isolation.

   i. Nitrogen to inboard MSIV/SRV pressure low.

9.3.1.5 Instrument Nitrogen System

9.3.1.5.1 Design Bases

Safety Design Basis

Instrumentation and control systems located inside the reactor primary containment are supplied with nitrogen gas at 120 psig from the GSN system. The IAS designation is retained for these systems which are nitrogen gas exclusively during normal plant operation.

Instrumentation and control systems located inside the reactor primary containment, except as described in Section 9.3.1.4.5, are not safety related. However, all piping, valves, and fittings located in Category I areas are seismically analyzed and supported in accordance with SSE design requirements so that their failure will not damage safety-related equipment. For containment penetrations and items within the containment areas, see Section 3.2.

Power Generation Design Bases

Nitrogen gas for instrumentation and control systems located inside the reactor primary containment areas is supplied from the vapor spaces of two 11,000-gal liquid nitrogen vertical storage tanks maintained under a constant pressure of approximately 200 psig. The liquid nitrogen tanks are located in the yard area, north-northeast of the reactor building, alongside the railroad access lock. From the liquid nitrogen tanks, nitrogen flows through an active bank of finned ambient vaporizers, a trim heater for heating to 100°F, and a pressure-reducing station that reduces the nitrogen gas pressure to 120 psig. An instrument nitrogen receiver is provided inside the reactor building for additional storage capacity. Nitrogen gas for instrumentation and controls inside the primary containment is distributed from this nitrogen receiver.

A nitrogen gas backup supply connection is provided from the high-pressure nitrogen gas storage cylinders to the instrument nitrogen receiver through a 355/100 psig pressure-reducing station.

Although instrumentation and control systems within the reactor primary containment are nonsafety related, the nitrogen gas supplied for these systems meets or exceeds the quality requirements of ANSI MC11.1-1975 (approved January 15, 1976) (ISA-S7.3), Quality Standard Instrument Air.

NOTE: Since all safety-related components that use air or nitrogen have a particle size limit of no greater than 40 microns, Unit 2 will take exception to the ANSI MC11.1-1976 particle size limit. The new Unit 2 limit for particle size is 40 microns.

Additionally, these piping systems will receive a preoperational cleaning for the removal of contaminants and to provide the required cleanliness level required. Also, all piping associated with these systems is of stainless steel, which eliminates the potential for particulate contamination coming from the piping material.

The pressure-retaining components of the instrumentation and control systems located inside the reactor primary containment are designed, constructed, and inspected in accordance with the applicable requirements of ASME Section III, Division 1, Subsection ND for Class 3 components, and Subsection NC for Class 2 components. Piping segments that penetrate the primary containment boundary are designed to Safety Class 2, seismic Category I requirements.

Each 11,000-gal liquid nitrogen storage tank contains the equivalent gas capacity of 1,024,000 SCF of nitrogen. Each storage vessel consists of a Type 304 stainless steel inner tank fabricated to Section VIII of the ASME Code requirements, an outer carbon steel jacket, and an annular space under vacuum filled with superinsulation for maintaining a low normal evaporation rate of approximately 0.15 percent per day. The normal operating pressure of the liquid nitrogen storage tank is 190 psig.

9.3.1.5.2 System Description

The nitrogen gas supply for instrumentation and controls within the reactor primary containment areas is provided by the two 11,000-gal liquid nitrogen vertical storage tanks located in the yard area (see Figure 9.3-20 for system P&IDs). These two liquid nitrogen storage tanks also supply nitrogen gas for inerting the primary containment when required. Additionally, a low-pressure slipstream from the nitrogen gas system maintains the reactor primary containment atmosphere inerted during normal plant operations. A nitrogen gas backup connection to the GSN system is provided from the high-pressure nitrogen gas storage cylinders through a 355/100 psig pressure-reducing station during off-normal conditions for instrument nitrogen supply.

The nitrogen gas supply for instrumentation and controls is normally drawn off the vapor spaces of the liquid nitrogen storage tanks, absorbs heat energy from the surrounding environment across an active bank of finned ambient vaporizers, heated to 100°F through one of two electric trim heaters, and its pressure reduced from 190 psig to 120 psig.

The GSN system is provided with all necessary pressure and temperature indicators, alarms, and safety relief devices for safe and reliable operation. A solenoid-operated temperature control valve installed in the main supply header is set to close if the nitrogen gas temperature drops to the low temperature

setpoint. This is a safeguard feature that prevents the flow of low temperature nitrogen gas into the piping distribution system in the event of a trim heater failure.

An instrument nitrogen receiver is provided inside the reactor building for additional storage capacity. Nitrogen gas is distributed throughout the instrumentation and control systems piping network within the reactor primary containment areas from this receiver.

9.3.1.5.3 Safety Evaluation

The Station nitrogen systems operate to supply the instrumentation and control systems inside the reactor primary containment with instrument quality nitrogen gas at 120 psig.

The liquid nitrogen storage tanks and the six modular nitrogen gas cylinders, nitrogen gas receivers, and accumulators have sufficient capacities to supply the requirements of the instrumentation and control systems within the reactor primary containment.

The principal gas-operated valves supplied with instrument nitrogen gas inside the primary containment areas are the inboard MSIVs, the main steam SRVs, and the drywell vacuum breakers. The selected main steam SRVs in the ADS are independently supplied with nitrogen gas from the high-pressure nitrogen gas storage cylinders described in the previous section, Section 9.3.1.4.

Each accumulator in the GSN system provides a passive safeguard which automatically supplies a motive power source for the operation of each SRV. The failure of a pilot control valve in the valve actuators is limited to that particular single SRV, as each SRV is independent of the others; and a postulated single failure does not interfere with the operation of the remaining units. The design bases covering the total number of SRVs include additional allowances for the malfunction of any one valve. Nitrogen gas availability to the SRVs following a SBO is addressed in Section 8.3.1.5.

Originally, the FMEA of the GSN systems, as part of the overall IAS systems, was contained in the Unit 2 FMEA document, which is historical. FMEAs for plant systems are now performed and controlled by the design process.

To prevent introducing cold (less than 40°F) nitrogen into the primary containment, the nitrogen temperature for normal inerting is controlled to 100°F and monitored upstream of the normal vent and purge lines. The inerting piping located in the yard area is provided with electric heat tracing to maintain the nitrogen inerting piping temperature at 100°F as shown on Figure 9.3-20. Low nitrogen temperature (70°F) is alarmed in the control room. Should the temperature continue to fall to 40°F at the outlet of the vaporizer, an independent temperature device will trip the

outlet control valve closed. The nitrogen supply to the GSN system is fed from nitrogen storage bottles and the ambient vaporizer is followed by trim heaters to hold the temperature at 100°F. The supply is fed to an accumulator prior to any containment penetration, thus essentially precluding any cold nitrogen from entering the containment. In addition, a temperature-sensing device just downstream of the trim heater will trip the downstream valve closed if the temperature drops below 40°F. In addition, there is no equipment or piping in the direct path of the injected nitrogen in either the drywell or wetwell, and the nitrogen system is normally isolated from the primary containment. Inerting is controlled administratively, and the valves are returned to a closed position after inerting.

9.3.1.5.4 Inspection and Testing Requirements

The GSN system is operated on a continuous basis. It is maintained and monitored, with off-normal conditions alarmed during normal plant operation.

The instrumentation and control systems within the reactor primary containment will be tested in accordance with the requirements of the applicable regulatory positions of RG 1.68.3, as discussed in Table 1.8-1.

9.3.1.5.5 Instrumentation Requirements

Description

Instrumentation and controls are provided for the manual and automatic operation of the GSN systems within the reactor primary containment areas. These controls and monitors are described below.

The nitrogen gas system is placed in operation manually, including the trim heaters. In normal operation, only one of two trim heaters is used to control the nitrogen gas temperature. The other trim heater is held on standby.

The GSN systems primary containment isolation valve closes when any of the following conditions exist: the control switch is placed in the close position, a LOCA isolation signal is present, or the manual isolation switch is activated. The isolation valve can be manually opened when a LOCA isolation signal is not present and the manual isolation switch is not activated.

Monitoring

Control room indications are provided for the following functions:

1. Open (red) and closed (green) indicating lights for the GSN system primary containment isolation valve.

2. Power failure (amber) indicating light for the GSN system primary containment isolation valve.

3. Annunciators for the following:

   a. GSN system trouble.

   b. Primary containment nitrogen gas purge temperature low.

9.3.2 Process and Post-accident Sampling Systems

The plant process sampling system consists of three subsystems: the reactor plant sample system, the turbine plant sample system, and the radwaste sample system. Miscellaneous sample points are provided on individual process systems where needed. These sample points and their associated equipment are considered as part of the parent process system, not the subsystems. The post-accident sampling system (PASS) is discussed in Section 1.10, Section II.B.3. This system will not be fully tested and operational prior to fuel load. The system will be appropriately tested prior to exceeding 5 percent of full reactor power. Since relatively low amounts of radioactivity and decay heat are generated from testing up to 5 percent power, the system is not needed in advance of this.

9.3.2.1 Design Bases

The plant process sampling systems are designed:

1. To continuously monitor selected plant process streams.

2. To provide grab sample points to back up the continuous analyzers and allow laboratory analysis of other process streams.

3. To provide representative samples.

4. To minimize coolant loss in case of a leak by using small diameter tubing.

5. To ensure tank samples are representative by sampling tank bulk volumes and not low points or sediment traps.

6. To ensure that piping and valves between the sample source and the outer isolation valve conform to ASME Section III, Safety Classes 1, 2, and 3 as appropriate, and that tubing and valves downstream of the outer containment isolation valve are designed in accordance with ANSI B31.1 requirements.

The equipment and floor drain systems serving buildings that house safety-related equipment have sufficient capacity to prevent excessive drain buildup that could affect the operability of the equipment. The discharge piping from each sump pump contains a check valve to prevent backflow from one pump to another.

The LPCS, RHR (RHR-A,B,C), RCIC, and HPCS pump cubicles in the reactor building each have a sump and duplex pumps which discharge to a common header located outside the cubicles whose walls are waterproofed. In the event that one of the cubicles should flood, transfer of water to other cubicles is prevented by additional check valves installed in each sump pump discharge line, prior to connection with the common header at a point outside the cubicle. The reactor building general area at el 175 ft and each cubicle have a safety-related high water level switch, wall-mounted near the floor, to detect flooding condition and to annunciate an alarm in the main control room.

All equipment drain and floor drain piping in the reactor building and control building are either seismically supported or evaluated as not requiring seismic support in order to preserve the operability of adjacent safety-related components.

Originally, the FMEA of the reactor building equipment and floor drain systems was contained in the Unit 2 FMEA document, which is historical. FMEAs for plant systems are now performed and controlled by the design process.

9.3.3.4 Testing and Inspection Requirements

All drain piping systems are tested for defects and leaks after installation and all leaks in pipes and joints are repaired. All sump pumps and sump pump discharge piping are analyzed for stress and tested to ensure that their performance meets the required design flow rates.

9.3.3.5 Instrumentation Requirements

Description

Instrumentation and controls are provided to control the sump levels by manual or automatic operation of the sump pumps when sump level is high. Safety-related instrumentation and controls are provided for automatic or manual control of the drywell equipment and floor drain system containment isolation valves. The controls and monitors described in the following sections are located in the main control room. The control logic is shown on the following figures:

9.3-13 Reactor Building Equipment and Floor Drains

9.3-14 Turbine Building Equipment and Floor Drains

9.3-15 Radwaste Building Equipment and Floor Drains

THIS PAGE INTENTIONALLY BLANK

9.3-16 Miscellaneous Buildings Equipment and Floor Drains

Operation

The operation of the reactor building and turbine building equipment and floor drain systems is similar. Operation of the radwaste building drain sump pumps and miscellaneous buildings (auxiliary boiler building, CST building, main stack, control building, and screenwell building) sump pumps is also similar.

A manual selector switch is provided for each pair of floor drain sump pumps and each pair of equipment or floor drain pumps to select one pump as lead pump each time the corresponding tank high level switch is actuated. The lead pump starts automatically when the corresponding sump or drain tank level is high. The backup pump starts automatically when the sump or drain tank level is high-high. Both pumps stop automatically when the sump or drain tank level is low.

The drywell floor drain and the drywell equipment drain containment isolation valves close automatically on a LOCA isolation signal or manual containment isolation signal. Interlocks prevent the isolation valves from opening unless all of the following conditions exist: the LOCA isolation signal is removed, the isolation signal is reset, and the valves are opened manually.

Controls are provided for manual operation for each of the following:

1. Reactor building sump pump (local control).
2. Drywell floor drain pump.
3. Drywell floor drain containment isolation valve.
4. Reactor water drain isolation valve.
5. Reactor building equipment drain pump (local control).
6. Drywell equipment drain pump.
7. Drywell equipment drain containment isolation valve.
8. Reactor water drain control valve.
9. Turbine building floor drain sump pump (local control).
10. Condenser pit sump pump (local control).
11. Turbine building equipment drain pump.
12. Radwaste building drain sump pumps (local control).

number of independent control rods available to shut down the reactor. Since the SLCS is functionally redundant to the CRD system, it is not required to meet the single-failure criterion.

To assure the availability of the SLCS, two divisional sets of the components required to actuate the system, including pumps and explosive valves, are provided in parallel so that no single failure in these components will prevent initiation of the SLCS.

The system is designed to bring the reactor from rated power to cold shutdown at any time in core life. The reactivity compensation provided will reduce reactor power from rated to zero level and allow cooling the nuclear system to room temperature, with the control rods remaining withdrawn in the rated power pattern. It includes the reactivity gains that result from complete decay of the rated power xenon inventory. It also includes the positive reactivity effects from eliminating steam voids, changing water density from hot to cold, reduced Doppler effect in uranium, reducing neutron leakage from boiling to cold, and decreasing control rod worth as the moderator cools. The shutdown capability of the SLCS is evaluated for each fuel cycle and is reported in the cycle-specific Supplemental Reload Licensing Report (SRLR).

The minimum average concentration of natural boron required in the reactor core to provide adequate shutdown margin after operation of the SLC is 660 ppm. Calculation of the minimum quantity of sodium pentaborate to be injected into the reactor is based on the required 660 ppm average concentration in the reactor coolant, including recirculation loops, at 68°F and reactor water level at level 8. The result is increased by 20 percent to allow for imperfect mixing and leakage. Additional sodium pentaborate is provided to accommodate dilution by the RHR system in the shutdown cooling mode.

Cooldown of the nuclear system will require a minimum of several hours to remove the thermal energy stored in the reactor, cooling water, and associated equipment. The controlled limit for the reactor vessel cooldown is 100°F/hr, and normal operating temperature is approximately 547°F. Use of the main condenser and various shutdown cooling systems requires about 6 hr to lower the reactor vessel to a subcooled 70°F condition. This condition requires the minimum 660 ppm boron concentration. The specified normal boron injection rate is minimum 82.4 gpm with two pumps in operation. With both pumps operating, it will take 1 hr to inject sufficient boron to achieve the minimum required boron concentration.

The SLC equipment required for injection of neutron absorber solution into the reactor is designed as Category I for withstanding the specified earthquake loadings (Chapter 3). The SLCS is protected from the effects of tornadic forces (including tornado-generated missiles) by housing the system in a tornado-protected structure as listed in Table 3.2-1. The system

piping and equipment are designed, installed, and tested in accordance with requirements stated in Section 3.9B.

The SLCS is powered normally from offsite power sources. In the event of a plant offsite power failure, the pumps, valves, and controls necessary to assure boron injection are powered from the standby diesel generators. Heater electrical supply can be manually transferred to the Division I standby diesel generator in the event of loss of the normal ac source. The pumps and valves are powered and controlled from separate divisional buses and circuits.

The SLC pumps have sufficient pressure margin, up to the system relief valve setting of 1,387 psig with no backpressure to assure solution injection into the reactor above the normal pressure in the bottom of the reactor. The reactor SRVs begin to relieve pressure above approximately 1,100 psig. Therefore, the SLC positive displacement pumps cannot overpressurize the nuclear system.

Only one of the two SLC loops is needed for backup shutdown system operation. If a redundant component (e.g., pump) in one of the two parallel loops is found to be inoperable, there is no immediate threat to shutdown capability, and reactor operation can continue during repairs. The time during which one of the two parallel loops may be out of operation is given in the Technical Specifications.

9.3.5.4 Testing and Inspection Requirements

Testability of one pump at a time is possible while the reactor is in service. While one pump is being tested during reactor operation, the other pump is capable of injecting the borated solution if it receives an initiation signal. For integrated system testing during reactor shutdown, the SLCS is designed so that the pumps and all automatic valves of both loops can be tested for system performance. The system will function as if for an anticipated transient without scram (ATWS) event except that the process fluid is demineralized water from the system test tank.

Operational testing of the SLCS is performed in at least two parts to avoid inadvertently injecting boron into the reactor. With the valves to the reactor and from the storage tank closed, and the valves to and from the test tank opened, demineralized water in the test tank can be recirculated by starting either pump utilizing keylock switches in the main control room. This test can be accomplished with the reactor operating without affecting the operability of the other pump. During a refueling or maintenance outage, the injection portion of the system can be functionally tested by valving the suction line to the test tank and actuating the system from the main control room. System operation is indicated in the main control room.

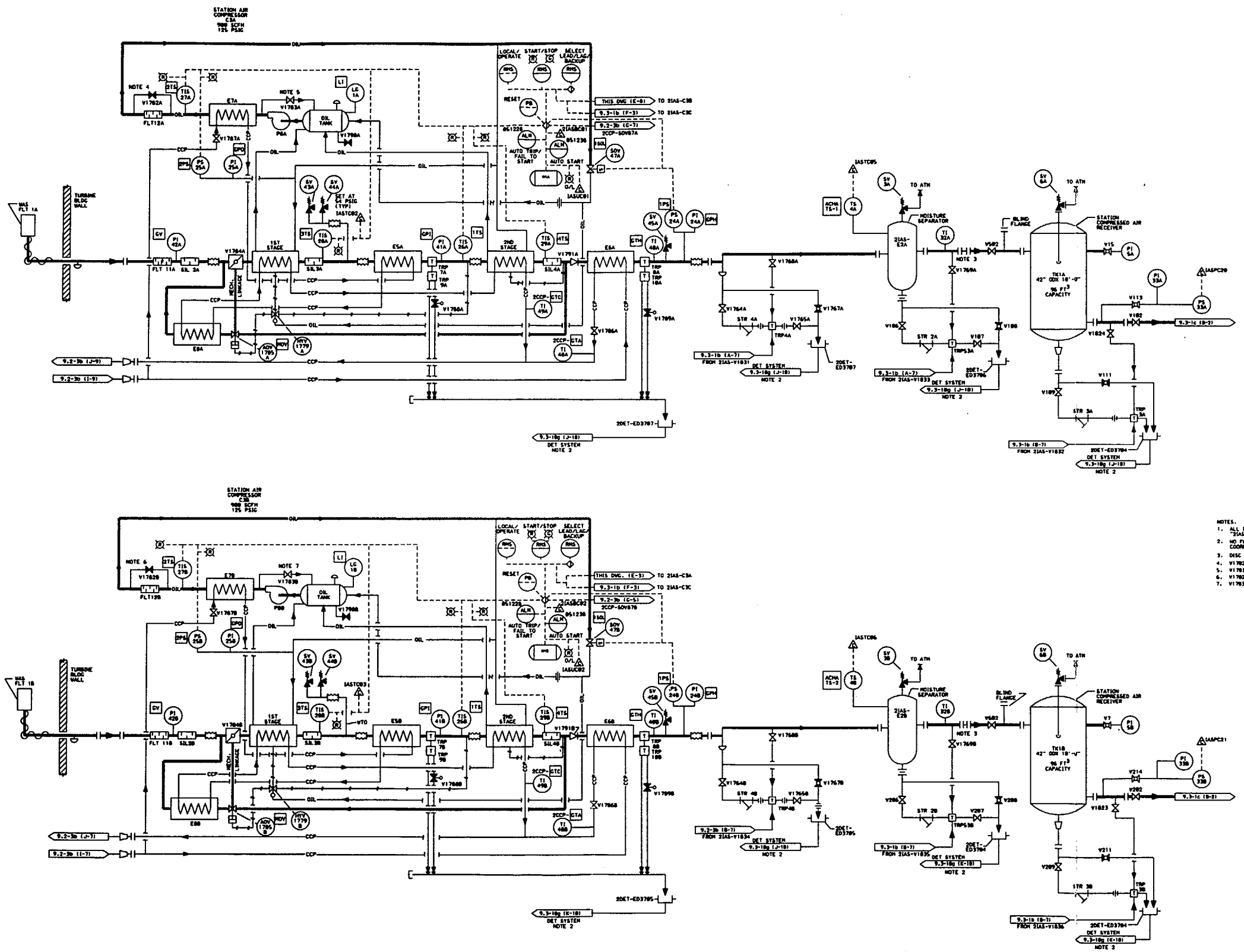

NOTES.

1. ALL INSTRUMENT AND EQUIPMENT NUMBERS TO BE PREFIXED WITH "21AS-" EXCEPT WHERE A DIFFERENT PREFIX IS SHOWN.
2. NO FLAG SHOWN ON CORRESPONDING DOCUMENT. COORDINATES PROVIDE INTERFACE LOCATION.
3. DESC HAS BEEN REMOVED.
4. V1782A IS INTERNAL TO FLT12A.
5. V1783A IS INTERNAL TO P8A.
6. V1782B IS INTERNAL TO FLT12B.
7. V1783B IS INTERNAL TO P8B.

THIS DRAWING WAS PRODUCED ELECTRONICALLY. DO NOT MAKE ANY CHANGES MANUALLY.

FIGURE 9.3-1a

INSTRUMENT AND SERVICE AIR

NIAGARA MOHAWK POWER CORPORATION
NINE MILE POINT-UNIT 2
UPDATED SAFETY ANALYSIS REPORT

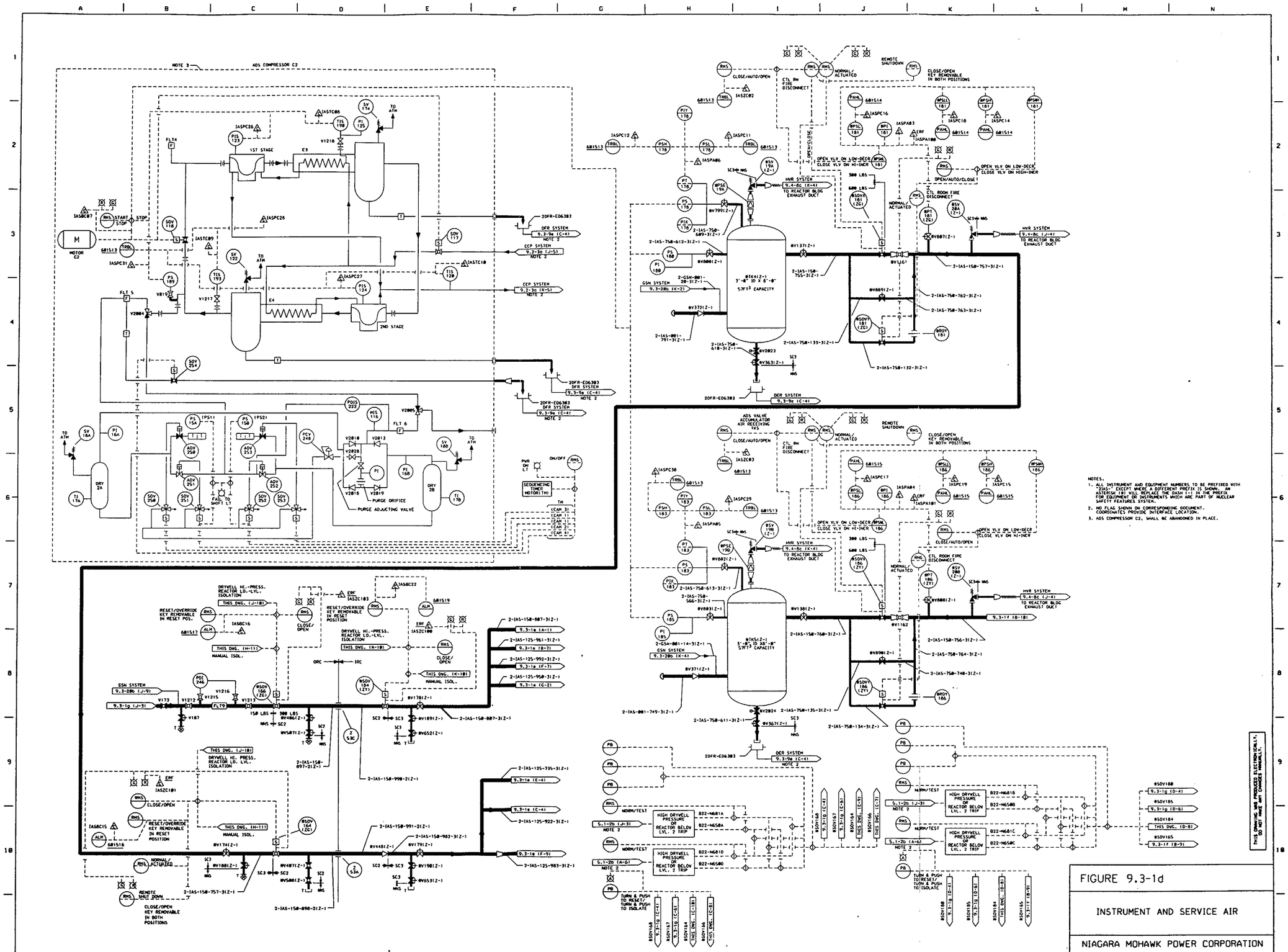

NOTES:

1. ALL INSTRUMENT AND EQUIPMENT NUMBERS TO BE PREFIXED WITH "2IAS-" EXCEPT WHERE A DIFFERENT PREFIX IS SHOWN. AN ASTERISK (*) WILL REPLACE THE DASH (-) IN THE PREFIX FOR EQUIPMENT OR INSTRUMENTS WHICH ARE PART OF NUCLEAR SAFETY FEATURES SYSTEM.
2. NO FLAG SHOWN ON CORRESPONDING DOCUMENT. COORDINATES PROVIDE INTERFACE LOCATION.
3. ADS COMPRESSOR C2, SHALL BE ABANDONED IN PLACE.

SOURCE: PID-19D-19
TITLE: INSTRUMENT & SERVICE AIR

FIGURE 9.3-1d

INSTRUMENT AND SERVICE AIR

NIAGARA MOHAWK POWER CORPORATION
NINE MILE POINT-UNIT 2
UPDATED SAFETY ANALYSIS REPORT

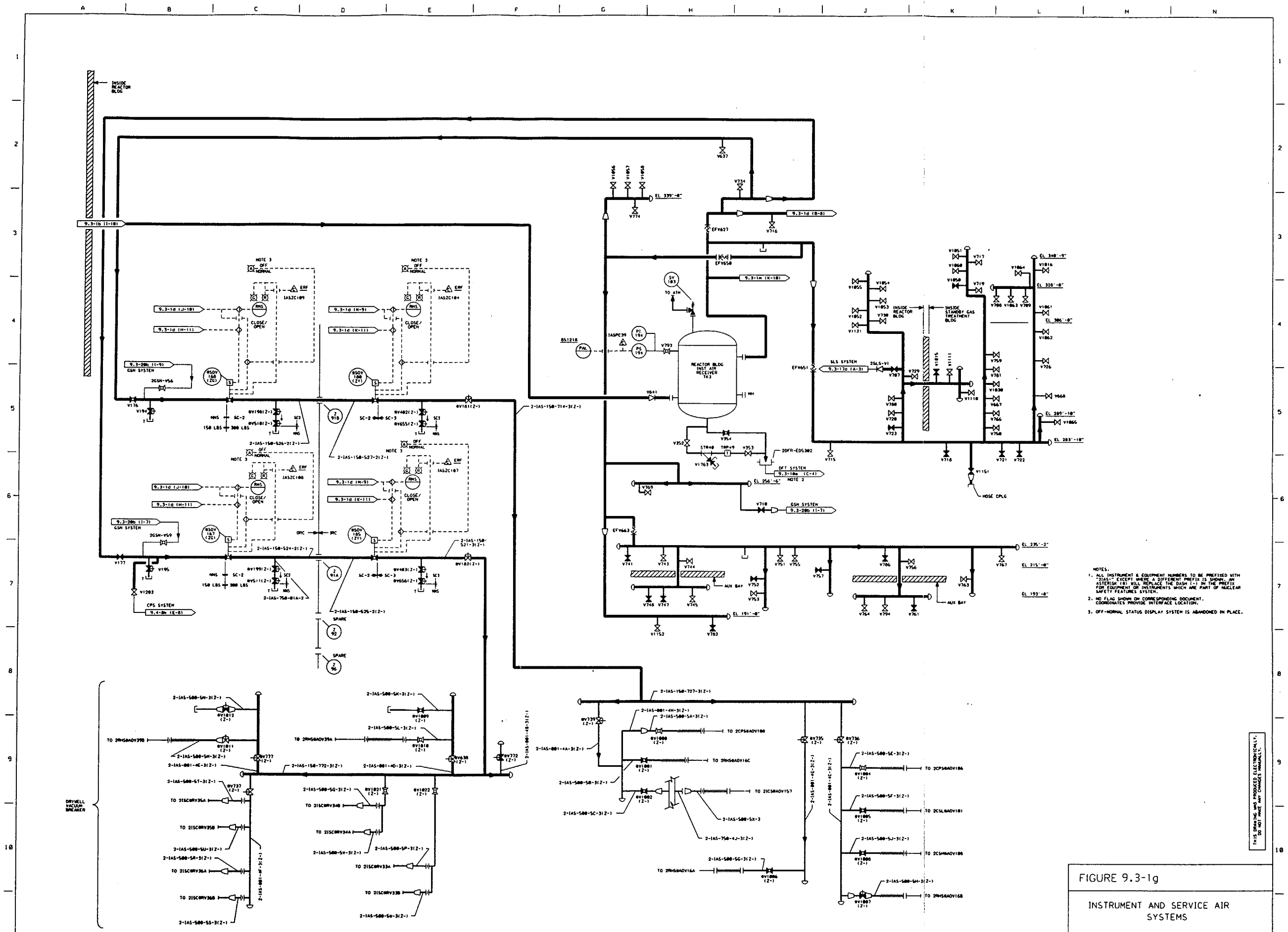

SOURCE, PID-19G-20
TITLE, INSTRUMENT & SERVICE AIR

FIGURE 9.3-1g

INSTRUMENT AND SERVICE AIR SYSTEMS

NIAGARA MOHAWK POWER CORPORATION
NINE MILE POINT-UNIT 2
UPDATED SAFETY ANALYSIS REPORT

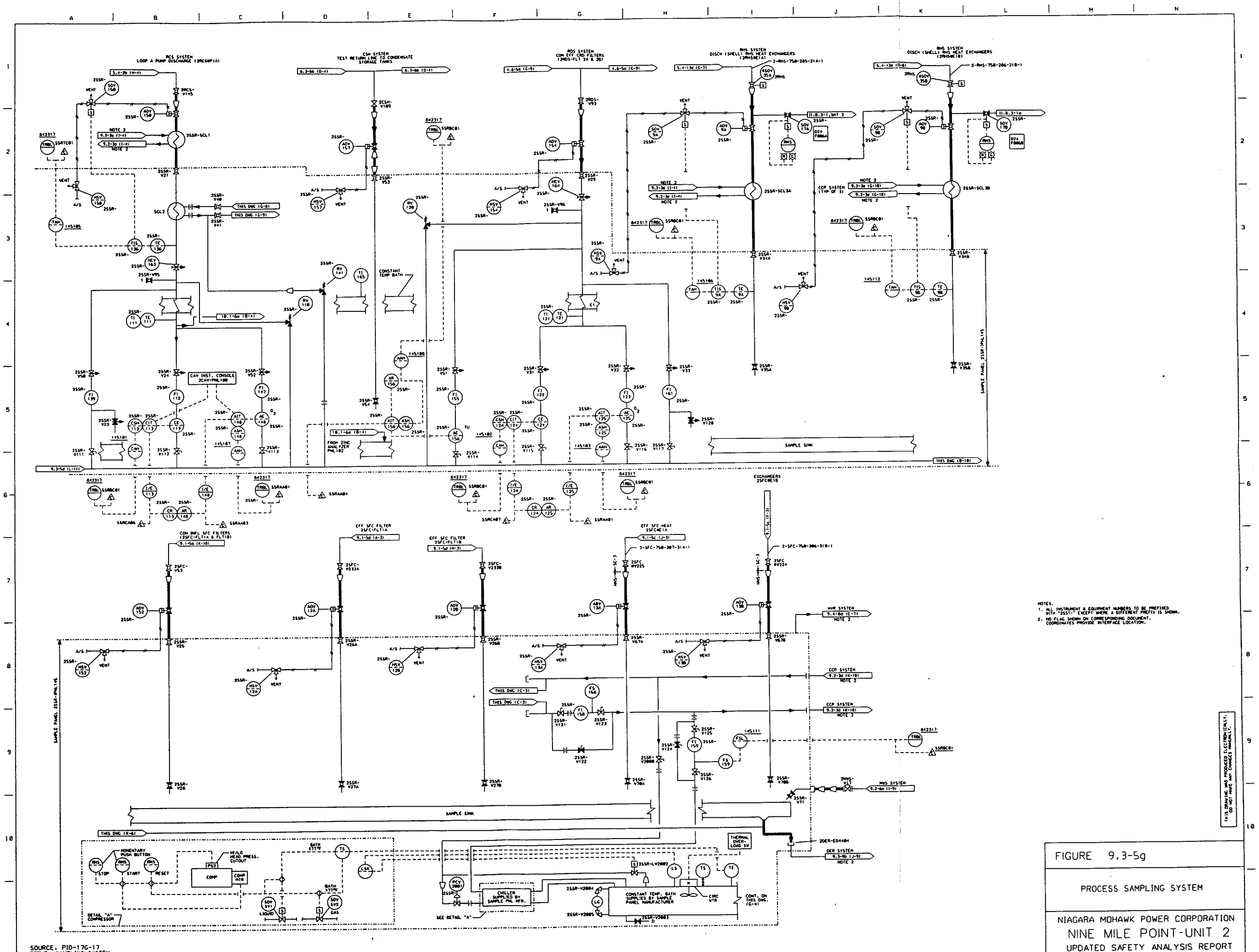

NOTES:
1. ALL INSTRUMENT & EQUIPMENT NUMBERS TO BE PREFIXED WITH "2551-" EXCEPT WHERE A DIFFERENT PREFIX IS SHOWN.
2. NO FLAG SHOWN ON CORRESPONDING DOCUMENT. COORDINATES PROVIDE INTERFACE LOCATION.

SOURCE: PID-17G-17
TITLE: SAMPLING SYSTEM

FIGURE 9.3-5g

PROCESS SAMPLING SYSTEM

NIAGARA MOHAWK POWER CORPORATION
NINE MILE POINT-UNIT 2
UPDATED SAFETY ANALYSIS REPORT

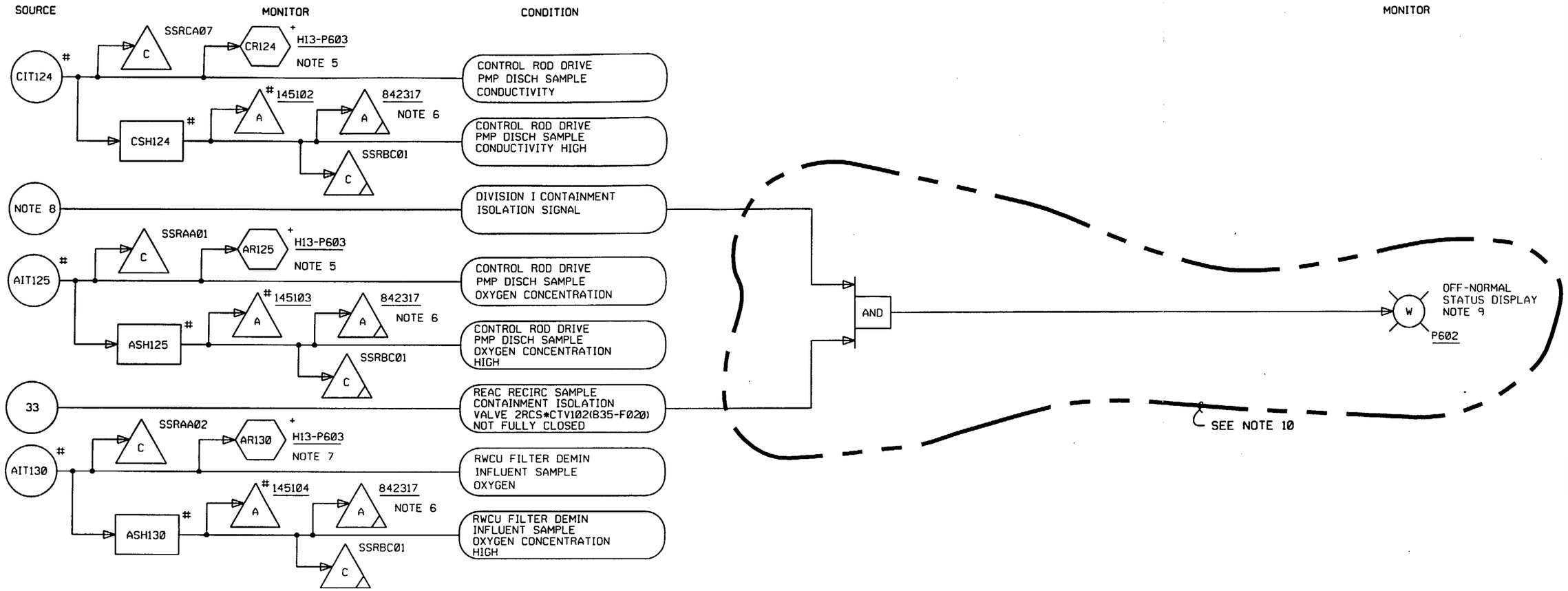

NOTES:

1. ALL INSTRUMENT AND EQUIPMENT NUMBERS TO BE PREFIXED WITH "2SSR-" EXCEPT WHERE A DIFFERENT PREFIX IS SHOWN.
2. ALL INSTRUMENT AND EQUIPMENT LOCATED ON 2SSR-IPNL145 EXCEPT AS NOTED.
3. #SUPPLIED BY SAMPLE PANEL VENDOR.
4. + SUPPLIED BY GE-(NEBG).
5. COMMON 2-PEN RECORDER, INPUTS FROM CR124 AND AR125.
6. COMMON ANNUNCIATOR-REACTOR PLANT SAMPLE SYSTEM TROUBLE. SEE LSK'S 21-2A, 21-2C, 21-2D AND 34-2 FOR ADDITIONAL INPUTS.
7. COMMON 2-PEN RECORDER-SEE CR106 ON LSK-21-2A FOR ADDITIONAL INPUT.
8. SEE 27-19A FOR DIVISION I CONTAINMENT ISOLATION SIGNAL LOGIC DEVELOPMENT.
9. LOGIC IS SHOWN FOR 2RCS*CTV102(B35-F020) LOGIC IS SIMILAR FOR 2RCS*CTV101(B35-F019) SEE NOTE 9 ON LSK-21-2C FOR ADDITIONAL INFORMATION.
10. OFF-NORMAL STATUS DISPLAY SYSTEM IS ABANDONED IN PLACE.

SETPOINTS SHOWN ON LOGIC DIAGRAMS ARE FOR LOGIC CLARIFICATION ONLY AND MAY BE ONLY APPROXIMATIONS OF THE ACTUAL PROCESS SETPOINT. REFER TO SETPOINT DATA SHEETS FOR ACTUAL PROCESS SETPOINTS.

SOURCE: LSK- 21-2B

FIGURE 9.3-6

REACTOR PLANT SAMPLING SYSTEM LOGIC DIAGRAM SHEET 2 OF 4

NIAGARA MOHAWK POWER CORP.
NINE MILE POINT-UNIT 2
UPDATED SAFETY ANALYSIS REPORT

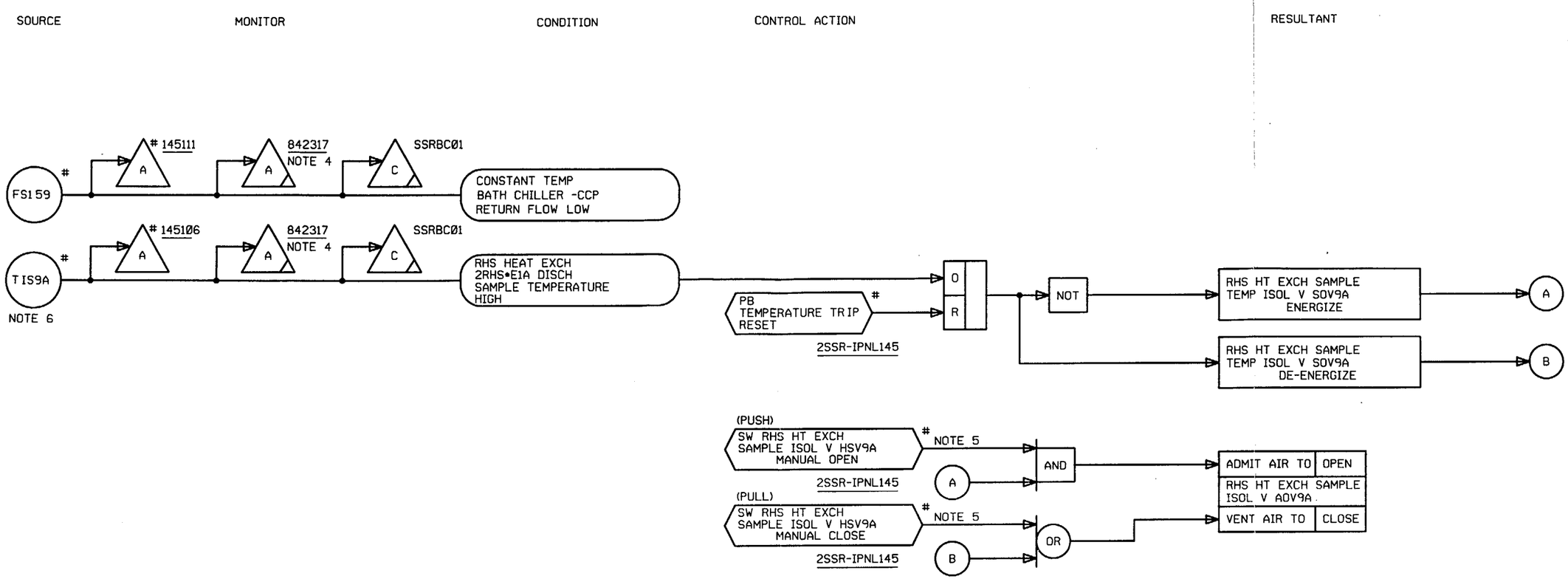

NOTES:

1. ALL INSTRUMENT AND EQUIPMENT NUMBERS TO BE PREFIXED WITH '2SSR-' EXCEPT WHERE A DIFFERENT PREFIX IS SHOWN.
2. ALL INSTRUMENT AND EQUIPMENT LOCATED ON 2SSR-IPNL145 EXCEPT AS NOTED.
3. # SUPPLIED BY SAMPLE PANEL VENDOR.
4. COMMON ANNUNCIATOR-REACTOR PLANT SAMPLE SYSTEM TROUBLE. SEE LSK'S 21-2A, 21-2B, 21-1C AND 34-2 FOR ADDITIONAL INPUTS.
5. PNEUMATIC CONTROL SWITCH.
6. LOGIC FOR TIS9A IS SHOWN. LOGIC FOR TIS9B (2RHS•E1B) SAMPLING IS SIMILAR.

SETPOINTS SHOWN ON LOGIC DIAGRAMS ARE FOR LOGIC CLARIFICATION ONLY AND MAY BE ONLY APPROXIMATIONS OF THE ACTUAL PROCESS SETPOINT. REFER TO SETPOINT DATA SHEETS FOR ACTUAL PROCESS SETPOINTS.

SOURCE: LSK-21-2D

FIGURE 9.3-6

REACTOR PLANT SAMPLING SYSTEM
LOGIC DIAGRAM SHEET 4 OF 4

NIAGARA MOHAWK POWER CORP.
NINE MILE POINT-UNIT 2
UPDATED SAFETY ANALYSIS REPORT

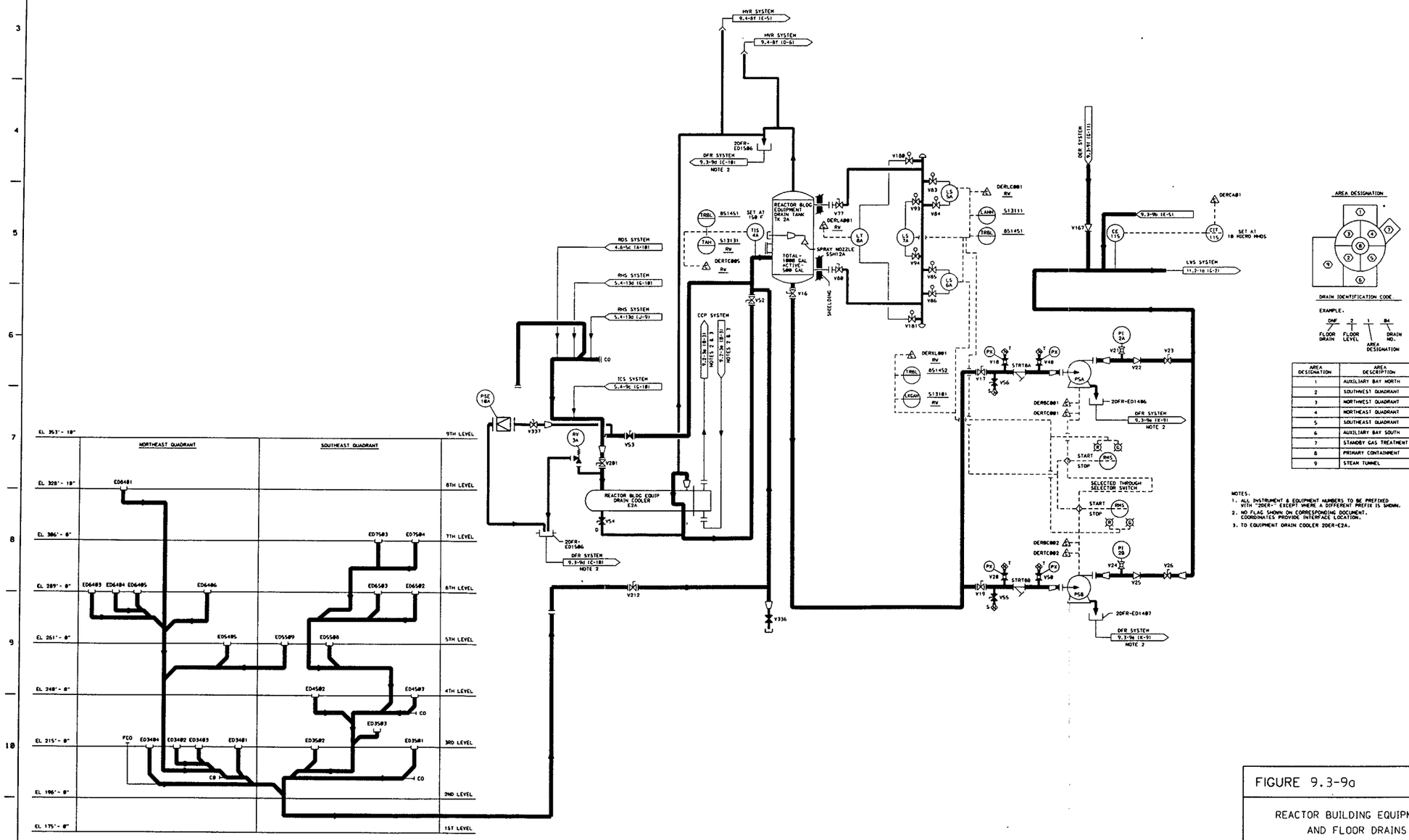

AREA DESIGNATION	AREA DESCRIPTION
1	AUXILIARY BAY NORTH
2	SOUTHWEST QUADRANT
3	NORTHWEST QUADRANT
4	NORTHEAST QUADRANT
5	SOUTHEAST QUADRANT
6	AUXILIARY BAY SOUTH
7	STANDBY GAS TREATMENT
8	PRIMARY CONTAINMENT
9	STEAM TUNNEL

NOTES:
1. ALL INSTRUMENT & EQUIPMENT NUMBERS TO BE PREFIXED WITH "20DER-" EXCEPT WHERE A DIFFERENT PREFIX IS SHOWN.
2. NO FLAG SHOWN ON CORRESPONDING DOCUMENT. COORDINATES PROVIDE INTERFACE LOCATION.
3. TO EQUIPMENT DRAIN COOLER 20ER-E2A.

THIS DRAWING WAS PRODUCED ELECTRONICALLY. DO NOT MODIFY MANUALLY.

SOURCE: PID-63A-15
TITLE: REACTOR BUILDING EQUIPMENT AND FLOOR DRAINS

FIGURE 9.3-9a

REACTOR BUILDING EQUIPMENT AND FLOOR DRAINS

NIAGARA MOHAWK POWER CORPORATION
NINE MILE POINT-UNIT 2
UPDATED SAFETY ANALYSIS REPORT

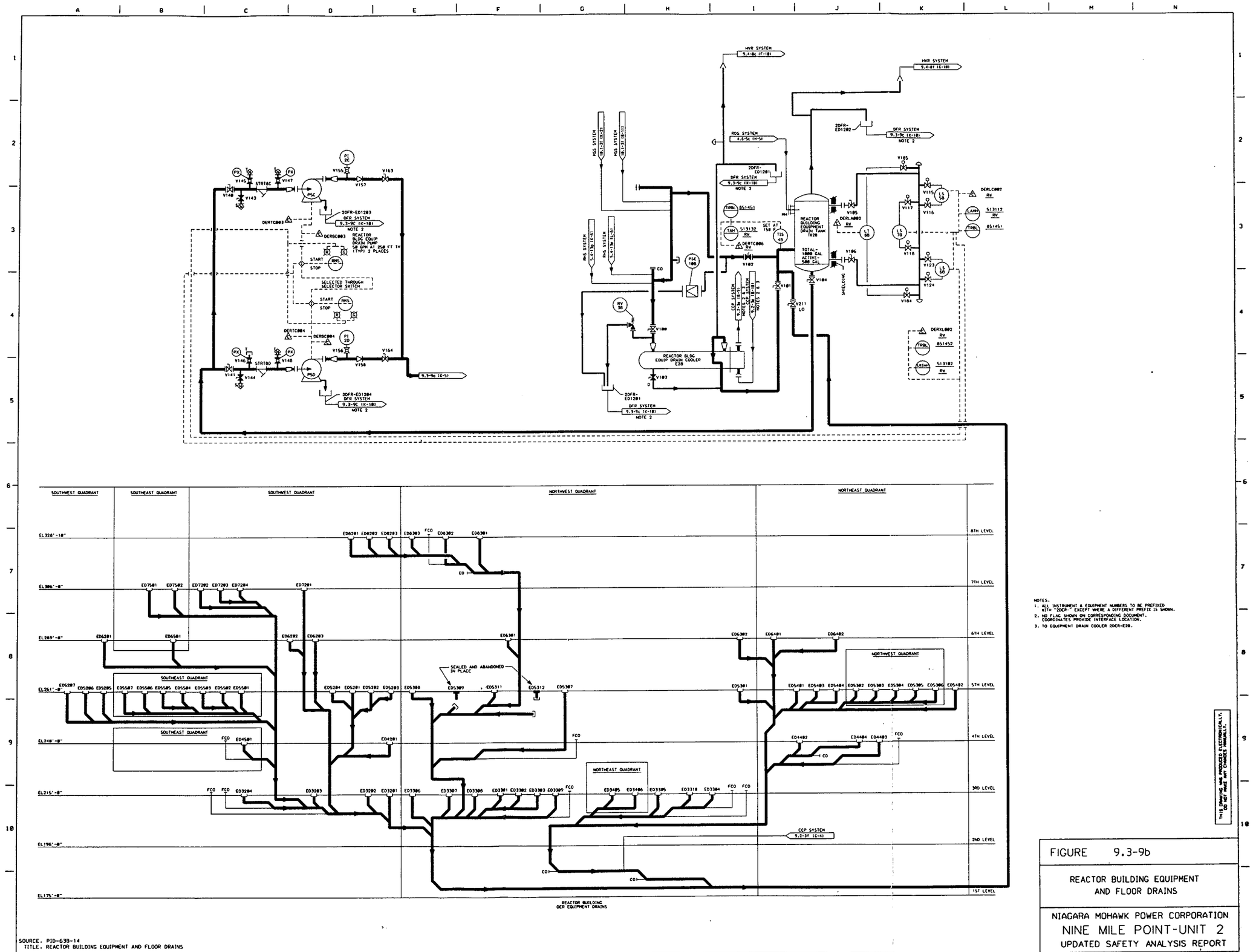

NOTES.
1. ALL INSTRUMENT & EQUIPMENT NUMBERS TO BE PREFIXED WITH "20ER-" EXCEPT WHERE A DIFFERENT PREFIX IS SHOWN.
2. NO FLAG SHOWN ON CORRESPONDING DOCUMENT. COORDINATES PROVIDE INTERFACE LOCATION.
3. TO EQUIPMENT DRAIN COOLER 20ER-E20.

THIS DRAWING WAS PRODUCED ELECTRONICALLY. DO NOT MAKE ANY CHANGES MANUALLY.

SOURCE. PID-63B-14
TITLE. REACTOR BUILDING EQUIPMENT AND FLOOR DRAINS

FIGURE 9.3-9b

REACTOR BUILDING EQUIPMENT AND FLOOR DRAINS

NIAGARA MOHAWK POWER CORPORATION
NINE MILE POINT-UNIT 2
UPDATED SAFETY ANALYSIS REPORT

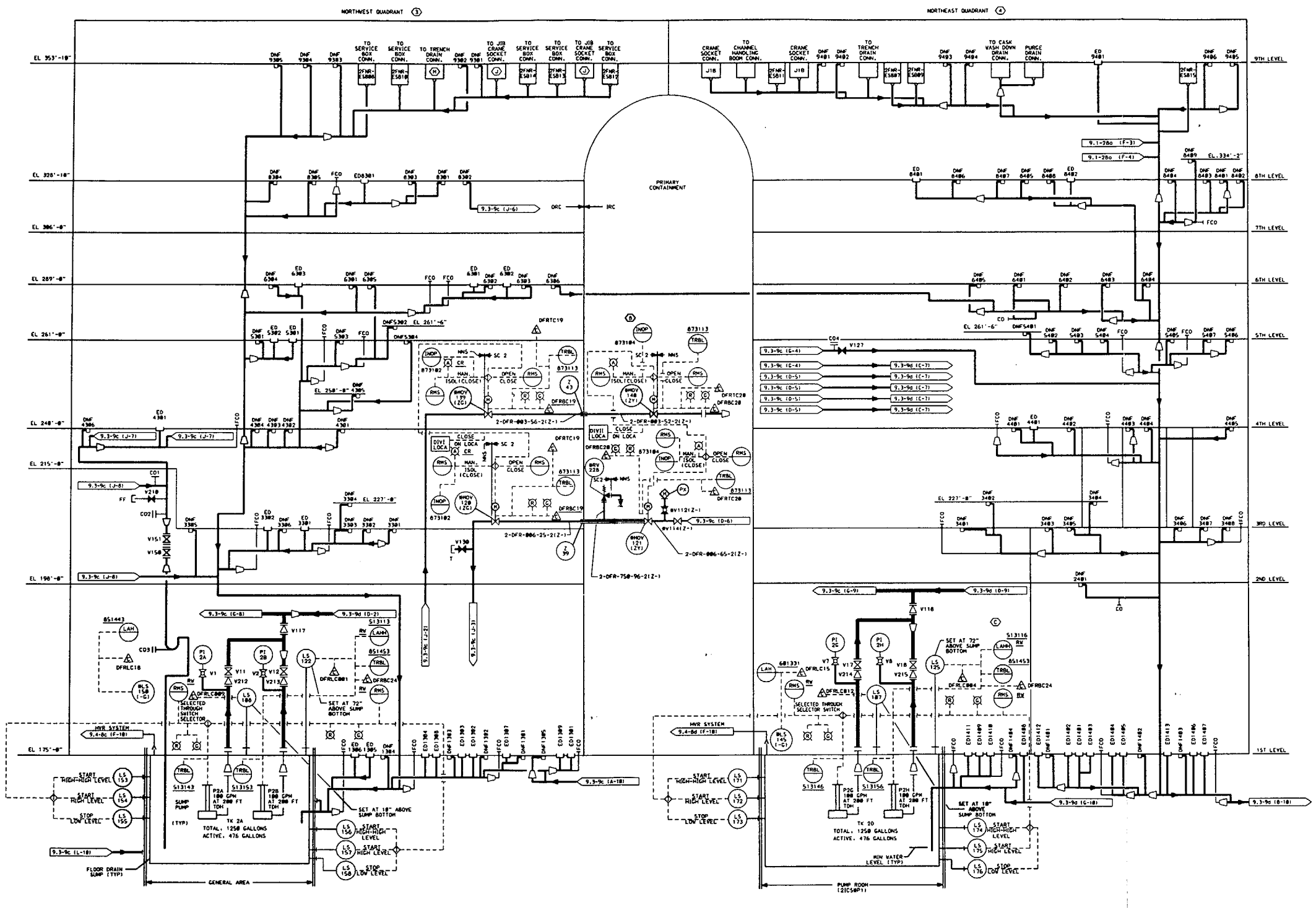

NOTES:

1. ALL INSTRUMENT AND EQUIPMENT NUMBERS TO BE PREFIXED WITH "2DFR-" EXCEPT WHERE A DIFFERENT PREFIX IS SHOWN. AN ASTERISK (*) WILL REPLACE THE DASH (-) IN THE PREFIX FOR EQUIPMENT OR INSTRUMENTS WHICH ARE PART OF NUCLEAR SAFETY FEATURE SYSTEM.
2. NO FLAG SHOWN ON CORRESPONDING DOCUMENT. COORDINATES PROVIDE INTERFACE LOCATION.
3. RELIEF VALVE IS SET AT 70 PSIG AND RELIEVES TO THE SUPPRESSION POOL.

AREA LEGEND

- (C) PUMP ROOM (21CS6P11)
- (E) CABLE REEL PIT
- (H) J1B CRANE STORAGE
- (L) NEW FUEL STORAGE VAULT
- (J) J1B CRANE SOCKETS
- (M) TRENCH DRAIN CONN.
- (N) CHANNEL HANDLING BOTTOM CONN.
- (O) CASK WASH DOWN DRAIN

LINE LEGEND

- GRAVITY DRAIN LINES
- CLEAN-OUT LINES

THIS DRAWING WAS PRODUCED ELECTRONICALLY. DO NOT MAKE ANY CHANGES MANUALLY.

FIGURE 9.3-9e

REACTOR BUILDING EQUIPMENT AND FLOOR DRAINS

NIAGARA MOHAWK POWER CORPORATION
NINE MILE POINT-UNIT 2
UPDATED SAFETY ANALYSIS REPORT

SOURCE: PID-63E-15
TITLE: REACTOR BUILDING EQUIPMENT AND FLOOR DRAINS

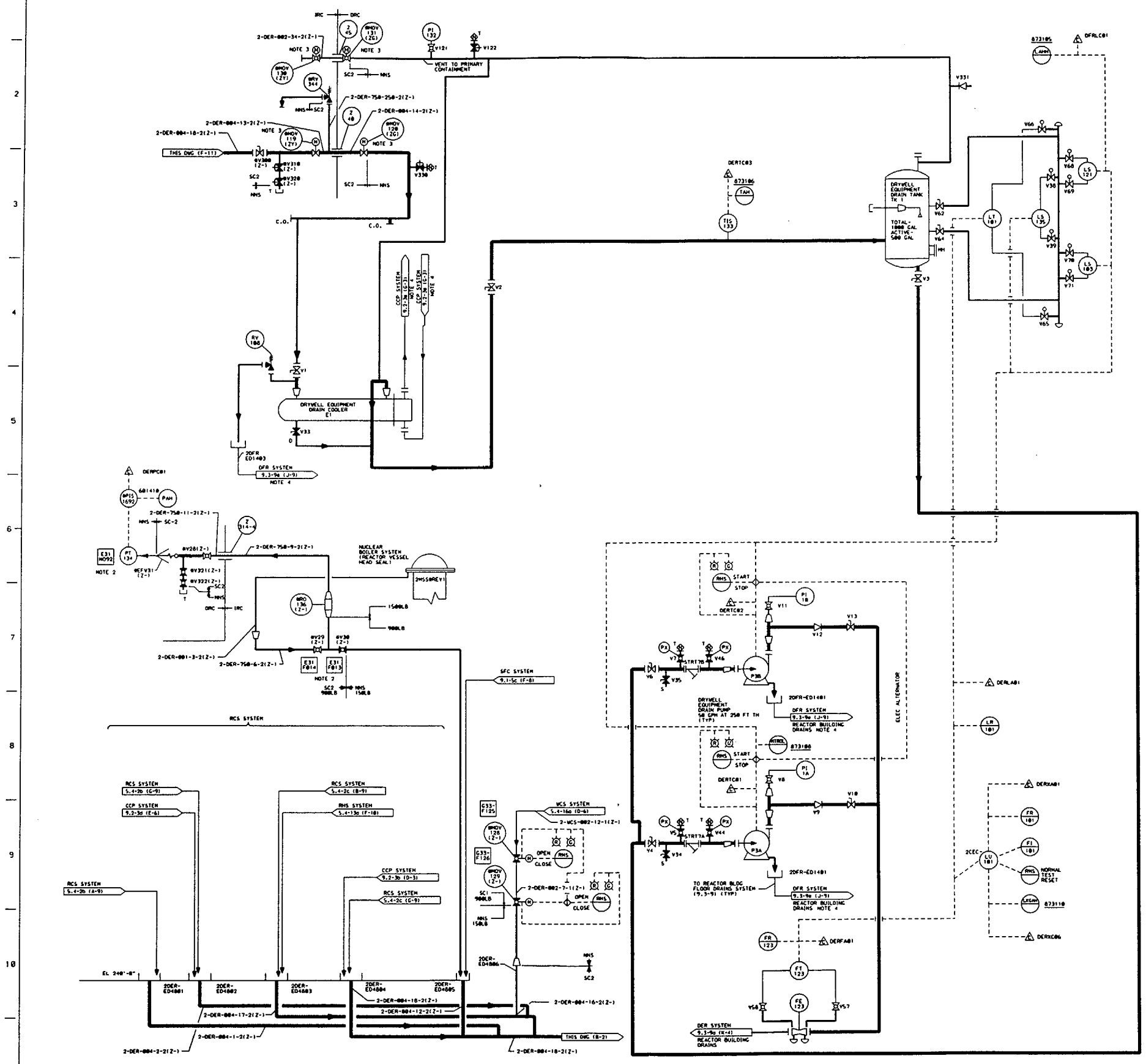

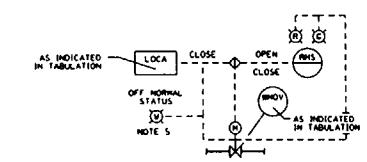

TYPICAL MOTOR OPERATED VALVE (MOV) LOOPS TABULATION

AREA	LOCA	MOV
C-2	DIV II	119
C-2	DIV I	120
C-1	DIV II	130
C-1	DIV I	131

NOTES:

1. ALL INSTRUMENT & EQUIPMENT NUMBERS TO BE PREFIXED WITH "2DER-" EXCEPT WHERE A DIFFERENT PREFIX IS SHOWN. AN ASTERISK (*) WILL REPLACE THE DASH (-) IN THE PREFIX FOR COMPONENTS OF SYSTEMS WHICH ARE PART OF NUCLEAR SAFETY FEATURES SYSTEMS.
2. GE-MEI INSTRUMENT AND EQUIPMENT NUMBERS ARE SHOWN IN SQUARES, AND ARE PREFIXED WITH "E31-" EXCEPT WHERE A DIFFERENT PREFIX IS SHOWN.
3. SEE TABULATION "TYPICAL MOTOR OPERATED VALVE (MOV)" THIS DWG (H-6).
4. NO FLAG SHOWN ON CORRESPONDING DOCUMENT. COORDINATES PROVIDE INTERFACE LOCATION.
5. OFF-NORMAL STATUS DISPLAY SYSTEM IS ABANDONED IN PLACE.

THIS DRAWING WAS PRODUCED ELECTRONICALLY. DO NOT MAKE ANY CHANGES MANUALLY.

FIGURE 9.3-9f

DRYWELL EQUIPMENT DRAINS

NIAGARA MOHAWK POWER CORPORATION
NINE MILE POINT-UNIT 2
UPDATED SAFETY ANALYSIS REPORT

SOURCE: PID-67A-17
TITLE: DRYWELL EQUIPMENT DRAINS

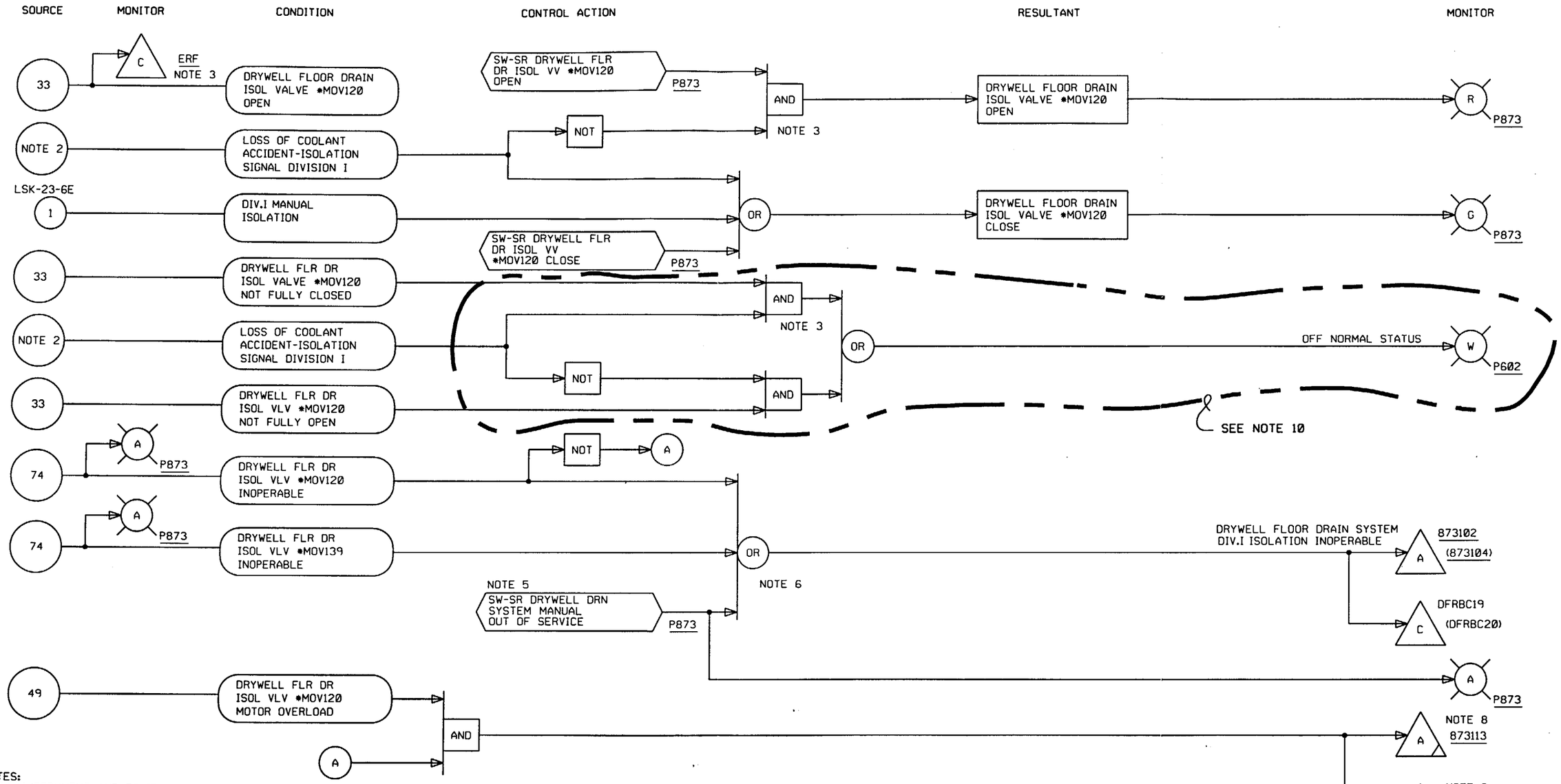

NOTES:

1. ALL INSTRUMENT AND EQUIPMENT NUMBERS TO BE PREFIXED WITH "2DFR-" EXCEPT WHERE A DIFFERENT PREFIX IS SHOWN. AN ASTERISK (*) WILL REPLACE THE DASH (-) IN THE PREFIX FOR INSTRUMENTS AND EQUIPMENT WHICH ARE PART OF NUCLEAR SAFETY FEATURES SYSTEM.
2. SEE LSK-27-19 FOR LOSS OF COOLANT ACCIDENT-ISOLATION SIGNAL LOGIC DEVELOPMENT.
3. LOGIC AND MONITORING SHOWN FOR ISOLATION VALVE *MOV120. LOGIC AND MONITORING ARE SIMILAR FOR *MOV121, *MOV139 AND *MOV140.
4. PNLS 873,601 & 602 LOCATED IN MAIN CONTROL ROOM.
5. ALTERNATE ACTION SWITCH.
6. LOGIC & MONITORING SHOWN FOR DRYWELL FLR DRAIN SYSTEM DIV.I ISOLATION INOPERABLE LOGIC & MONITORING ARE SIMILAR FOR DIV.II INOPERABLE.
7. ASSOCIATED EQUIPMENT MARK NUMBERS:

DIVISION I	DIVISION II
*MOV120	*MOV121
*MOV139	*MOV140

8. COMMON ANNUNCIATOR FOR ALL FLOOR DRAIN ISOLATION VALVES.
9. ASSOCIATED EQUIPMENT COMPUTER POINTS:

DFRTC19	DFRTC20
*MOV120	*MOV121
*MOV139	*MOV140

10. OFF-NORMAL STATUS DISPLAY SYSTEM IS ABANDONED IN PLACE.

SETPOINTS SHOWN ON LOGIC DIAGRAMS ARE FOR LOGIC CLARIFICATION ONLY AND MAY BE ONLY APPROXIMATIONS OF THE ACTUAL PROCESS SETPOINT. REFER TO SETPOINT DATA SHEETS FOR ACTUAL PROCESS SETPOINTS.

SOURCE: LSK- 23-6D

FIGURE 9.3-13

REACTOR BUILDING FLOOR AND EQUIPMENT DRAINS LOGIC DIAGRAM SHEET 4 OF 10

NIAGARA MOHAWK POWER CORP.
NINE MILE POINT-UNIT 2
UPDATED SAFETY ANALYSIS REPORT

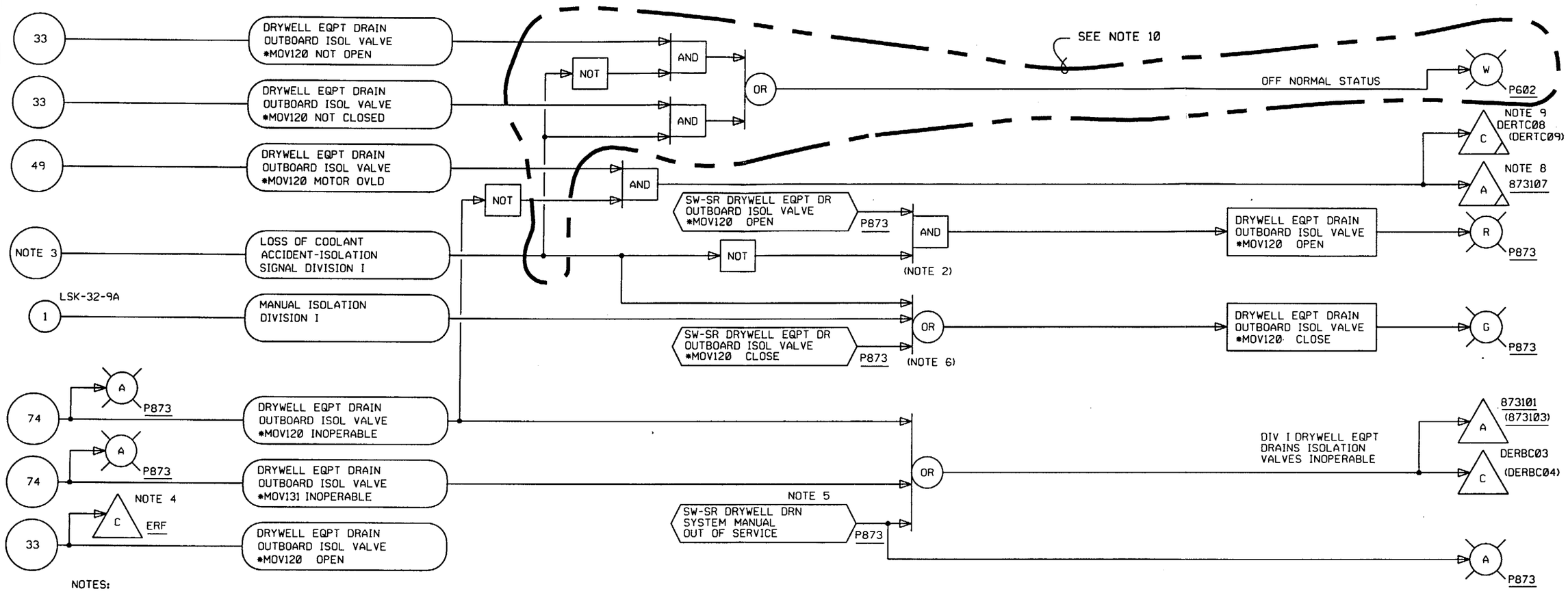

NOTES:

1. ALL INSTRUMENT AND EQUIPMENT NUMBERS TO BE PREFIXED WITH "2DER-" EXCEPT WHERE A DIFFERENT PREFIX IS SHOWN. AN ASTERISK(*) WILL REPLACE THE DASH(-) IN THE PREFIX FOR INSTRUMENTS AND EQUIPMENT WHICH ARE PART OF NUCLEAR SAFETY FEATURES SYSTEM.
2. LOGIC IS SHOWN FOR DRYWELL EQUIPMENT DRAIN ISOLATION VALVE *MOV120. LOGIC FOR DRYWELL EQUIPMENT DRAIN ISOLATION VALVES *MOV119, *MOV130 AND *MOV131 IS SIMILAR.
3. SEE LSK-27-19 FOR LOSS OF COOLANT ACCIDENT-ISOLATION SIGNAL DEVELOPMENT.
4. ASSOCIATED EQUIPMENT MARK NUMBERS:

DIVISION I	ERF	DIVISION II	ERF
*MOV120	DERZC100	*MOV119	DERZC101
*MOV131	DERZC102	*MOV130	DERZC103

5. ALTERNATE ACTION SWITCH.
6. LOGIC AND MONITORING SHOWN FOR DRYWELL EQUIPMENT DRAIN SYSTEM DIV I INOPERABLE. LOGIC AND MONITORING ARE SIMILAR FOR DIV II INOPERABLE.
7. PNL873,601 AND 602 LOCATED IN MAIN CONTROL ROOM.
8. COMMON ANNUNCIATOR FOR ALL DRYWELL EQUIPMENT ISOLATION VALVES.
9. ASSOCIATED EQUIPMENT CMPTR PTS:

DERTC08	DERTC09
*MOV120	*MOV119
*MOV131	*MOV130

10. THE OFF-NORMAL STATUS DISPLAY SYSTEM IS ABANDONED IN PLACE.

SETPOINTS SHOWN ON LOGIC DIAGRAMS ARE FOR LOGIC CLARIFICATION ONLY AND MAY BE ONLY APPROXIMATIONS OF THE ACTUAL PROCESS SETPOINT. REFER TO SETPOINT DATA SHEETS FOR ACTUAL PROCESS SETPOINTS.

SOURCE: LSK- 32-9C

FIGURE 9.3-13

REACTOR BUILDING
FLOOR AND EQUIPMENT DRAINS
LOGIC DIAGRAM SHEET 8 OF 10

NIAGARA MOHAWK POWER CORP.
NINE MILE POINT-UNIT 2
UPDATED SAFETY ANALYSIS REPORT

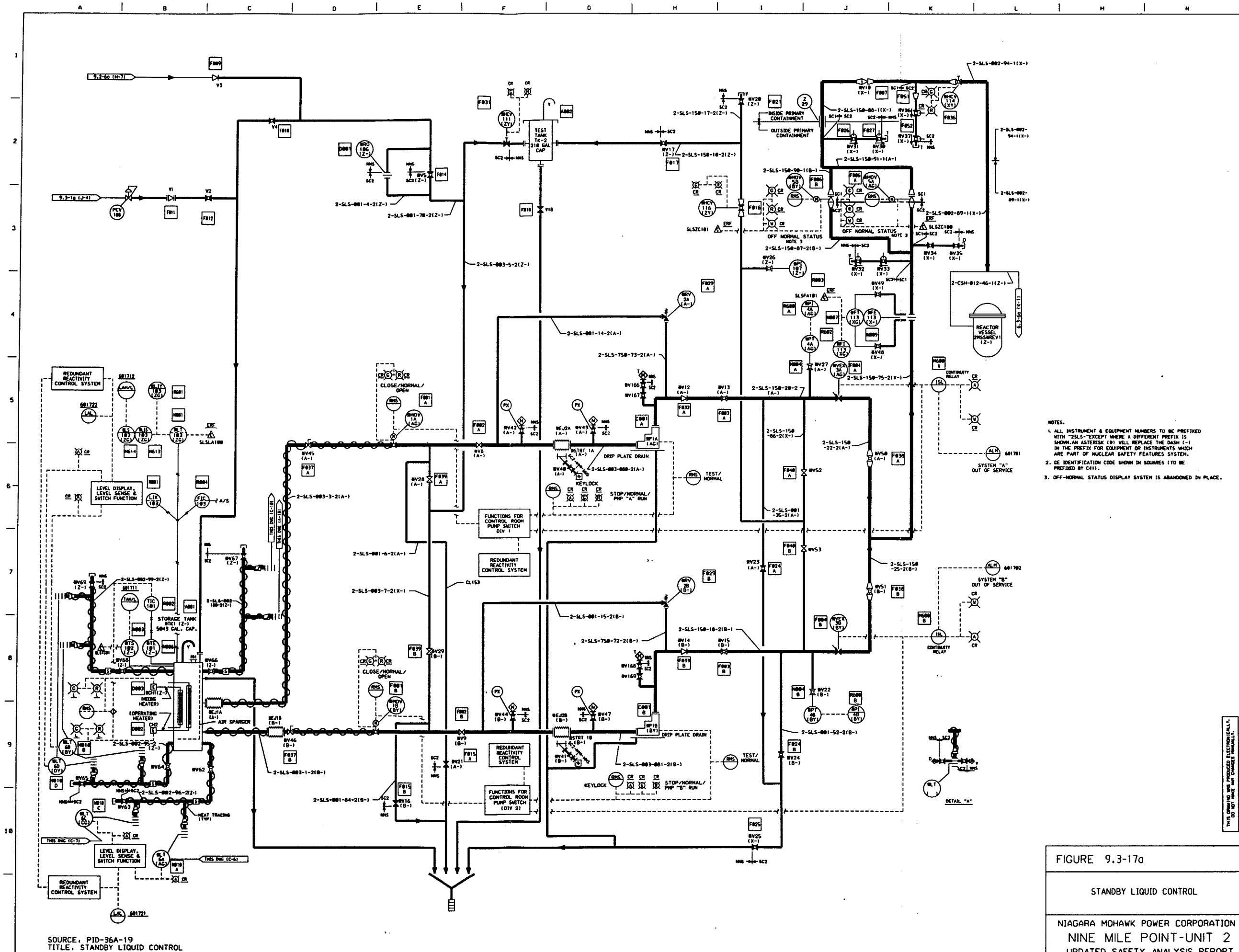

NOTES.

1. ALL INSTRUMENT & EQUIPMENT NUMBERS TO BE PREFIXED WITH "2SLS-"EXCEPT WHERE A DIFFERENT PREFIX IS SHOWN.AN ASTERISK (*) WILL REPLACE THE DASH (-) IN THE PREFIX FOR EQUIPMENT OR INSTRUMENTS WHICH ARE PART OF NUCLEAR SAFETY FEATURES SYSTEM.
2. GE IDENTIFICATION CODE SHOWN IN SQUARES (TO BE PREFIXED BY C411.
3. OFF-NORMAL STATUS DISPLAY SYSTEM IS ABANDONED IN PLACE.

SOURCE. PID-36A-19
TITLE. STANDBY LIQUID CONTROL

FIGURE 9.3-17a

STANDBY LIQUID CONTROL

NIAGARA MOHAWK POWER CORPORATION
NINE MILE POINT-UNIT 2
UPDATED SAFETY ANALYSIS REPORT

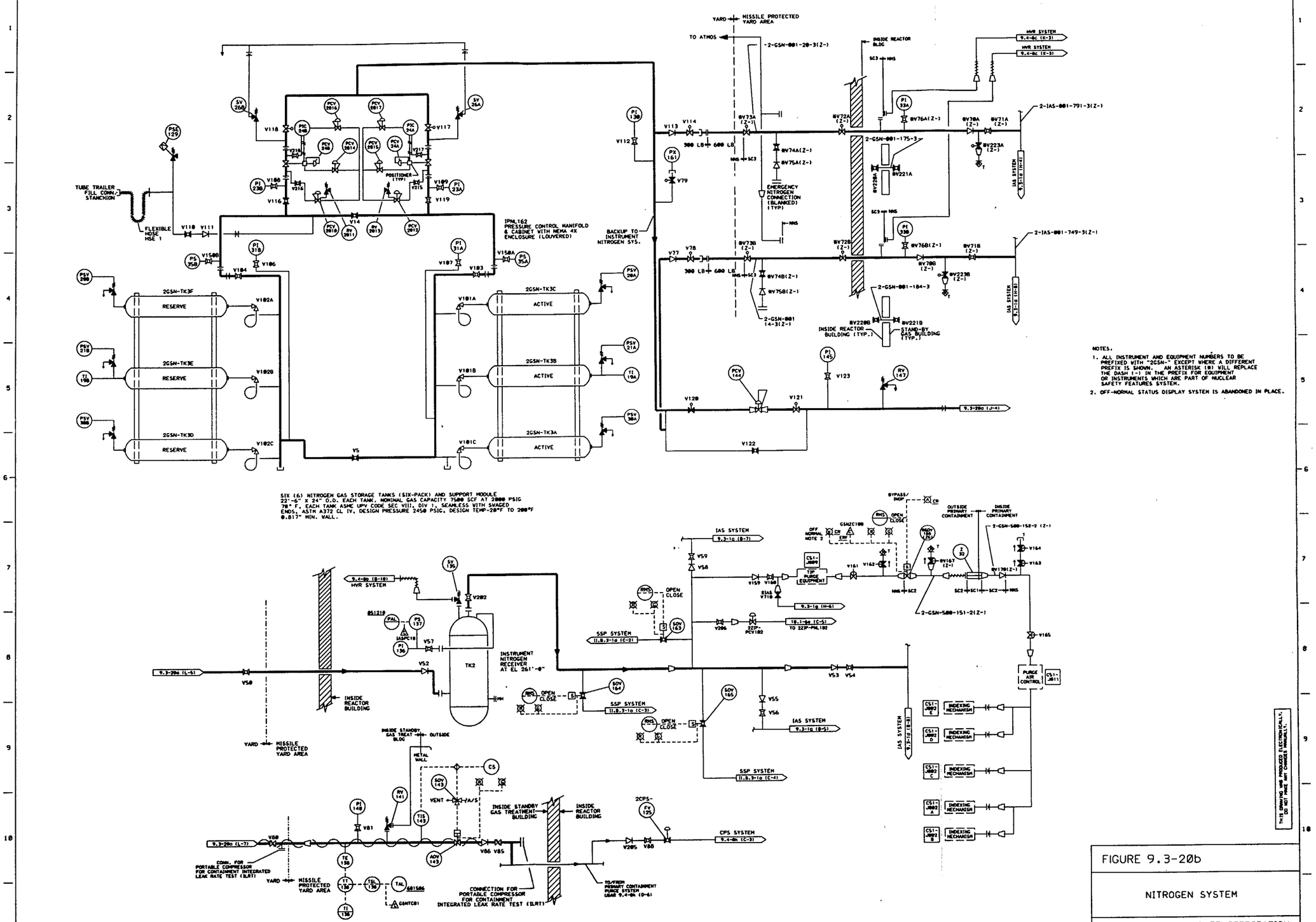

FIGURE 9.3-20b

NITROGEN SYSTEM

NIAGARA MOHAWK POWER CORPORATION
NINE MILE POINT-UNIT 2
UPDATED SAFETY ANALYSIS REPORT

SOURCE. PID-105B-19
TITLE. NITROGEN SYSTEM

UPDATED SAFETY ANALYSIS REPORT

NINE MILE POINT NUCLEAR STATION — UNIT 2

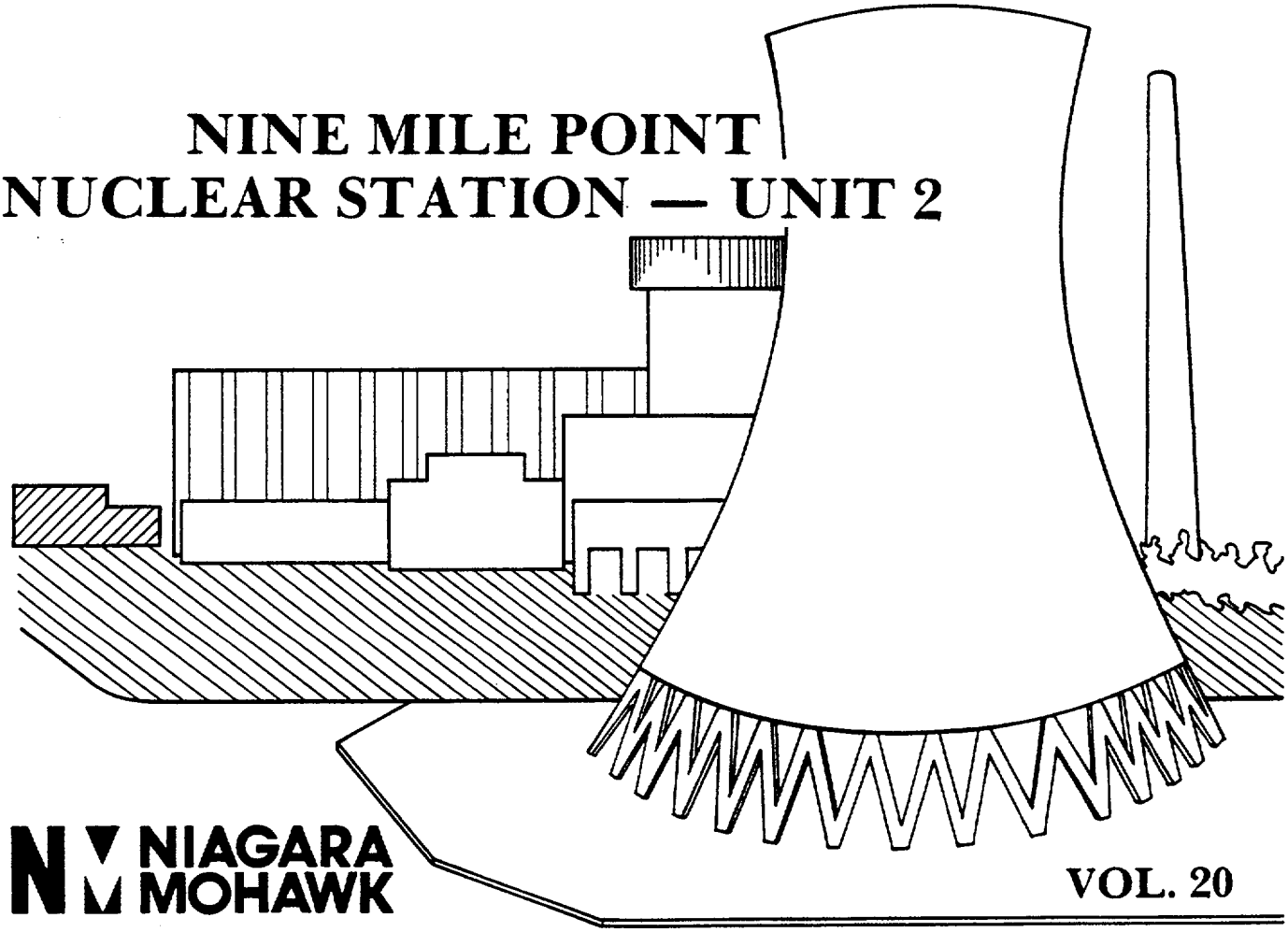

NIAGARA MOHAWK

VOL. 20

9.4 AIR CONDITIONING, HEATING, COOLING, AND VENTILATING SYSTEMS

NOTE: Tables 9.4-2 through 9.4-12 are marked "Historical" to signify that they need not be updated.

9.4.1 Control Building and Normal Switchgear Building Heating, Ventilating, and Air Conditioning System

The systems provide heating, ventilating, and air conditioning (HVAC) and, as necessary, space pressurization and smoke removal for the following areas within the control building and adjoining structures:

1. Main control room.
2. Relay room.
3. Remote shutdown rooms.
4. Standby switchgear rooms.
5. Computer room.
6. Basement.
7. Battery rooms.
8. Record storage vault.
9. Stairwells.
10. Electrical tunnels.
11. Normal switchgear building.

9.4.1.1 Design Bases

The design bases for the system are:

1. Provide an environment that ensures habitability of the areas served, consistent with personnel comfort and optimum performance of equipment, within the temperature limits shown in Table 9.4-1.
2. Maintain a positive space pressure in the control room and relay room to inhibit infiltration into these areas.
3. Detect and limit the introduction of airborne radioactive contamination into the control room and relay room, and remove any airborne radioactive materials from the control room.

4. Provide alternate points of intake for outdoor makeup air.

5. Provide smoke removal capability for the main control room and other major areas of the control building.

6. Provide once-through ventilation for each battery room ensuring dilution of generated hydrogen below the explosive concentration limit of 4 percent by volume.

7. Maintain each battery room at a negative space pressure to inhibit exfiltration of generated hydrogen to surrounding areas.

8. Provide clean and conditioned air with safety-related and seismically-qualified system components for the main control room, relay room, remote shutdown rooms, standby switchgear rooms, control building basement, control building battery rooms, and the electrical tunnels.

9. Provide clean and conditioned air with system components designed and constructed to nonnuclear safety standards for the control building computer room, record storage vault, and the normal switchgear building.

9.4.1.2 System Description

The control building HVAC system is shown on Figures 9.4-1a through 9.4-1f. Design data of principal equipment utilized in the system are listed in Table 9.4-2 (Historical). The system is located in a Category I structure that is missile and tornado protected.

In general, the HVAC system maintains conditions within the building by tempering recirculated air from the conditioned spaces, supplemented with sufficient outdoor air to offset exfiltration resulting from pressurization of the conditioned spaces. The system equipment has enough surplus capacity to maintain the design and maximum conditions listed in Table 9.4-1 during normal and postaccident modes of operation, including operation with outdoor air diverted through a safety-related charcoal air filter train, as a result of a monitored smoke, high-radiation condition at the outdoor air intake, or LOCA signal.

Outdoor air is supplied to the control building through four 100-percent capacity, missile and tornado protected, air intakes. Two of the intakes are located on the west side of the building at different elevations. The other two are located on the east side of the building, also at different elevations. The two outdoor air intakes located at the higher elevation, one on the east side and one on the west, supply outdoor air for ventilation

of the main control room and relay room. Both air intakes are normally open, but either of the intakes is sized and balanced to provide sufficient outdoor air for pressurization of control and relay rooms. Ventilation air for the standby switchgear/battery rooms is deducted from the higher elevation west side outdoor air intake. The two lower elevation outdoor air intakes, one on the east side and one on the west, supply outdoor air for ventilation of the basement. Sufficient outdoor air is provided in the main control room for pressurization.

The control building, electrical tunnels, and the normal switchgear building HVAC system are described in the following sections.

9.4.1.2.1 Main Control Room Elevation HVAC

The system consists of two safety-related, 100-percent capacity air conditioning units. Each unit contains a filter assembly, cooling coil, fan, and dampers. Conditioned air is supplied through ductwork to the main control room, office area, training room, lunch room, corridor, air conditioning equipment room, and Division I, II, and III cable chase areas. Return air from each area is also ducted to the air conditioning units. The air conditioning units also provide makeup air for the work release room and toilet rooms exhaust systems. Exhaust air from the lunch room kitchen unit and toilet rooms is discharged to the atmosphere through a tornado- and missile-protected hood by separate exhaust fans. System supply air capacity exceeds the combined return air and exhaust capacity to provide a positive pressure in the main control room.

Heating for all areas, except the corridor and the air conditioning equipment room, is provided by duct-mounted electric heaters. Local heating in the corridor, lunch room, work release room, and training room is provided by electric baseboard heaters. Local heating in the air conditioning equipment rooms and Division II and III cable chase areas is provided by electric unit heaters.

Return air and outdoor makeup air are mixed before passing through the air conditioning unit filter assembly. Manual dampers within each filter assembly permit air to be diverted through a charcoal filter section for odor removal. The charcoal section is normally bypassed.

Chilled water to each air conditioning unit cooling coil is supplied from the control building chilled water system (Section 9.4.10).

A smoke removal system, common for the main control room elevation and the relay room elevation, utilizes a separate smoke removal supply air unit, connected to HVAC system ductwork through normally closed air-operated dampers. When the smoke removal fan is manually started, the air conditioning unit for

that elevation is manually shut down. Outdoor makeup air is drawn through a missile- and tornado-protected opening located on the roof of the control building. Smoke exhaust is discharged to the atmosphere through a similarly protected exhaust hood.

9.4.1.2.2 Outdoor Air Special Filter Trains

Radiation detectors monitor outdoor makeup air radiation levels during Operational Condition (OC) 1, 2, 3 and **. The double asterisk condition applies when irradiated fuel is being handled in the reactor building and during core alterations and operations with a potential for draining the reactor vessel and uncovering irradiated fuel. These radiation detectors are not required to monitor outdoor makeup air radiation levels during OC 4 and 5 because all accidents which take credit for operation of the control room outdoor air special filter train system in the emergency pressurization mode of operation can only occur in OC 1, 2, 3 and ** as analyzed and presented in Chapter 15, Accident Analysis.

When supply air radiation levels are high or LOCA signal exists, the supply air is diverted automatically to the intake of a safety-related special filter train. Two 100-percent capacity special filter trains are provided. Each contains an electric heating element that controls the humidity of supply air, a prefilter, a high-efficiency particulate air (HEPA) filter, an activated charcoal adsorber for removal of radioactive iodine and other contaminants, and a second HEPA filter.

Air leaving a special filter train enters a filter booster fan, which discharges to the common duct supplying air to the air conditioning units.

Nonsafety-related smoke detectors monitor outdoor makeup air during all modes of operation and annunciate an alarm in the main control room.

9.4.1.2.3 Relay Room Elevation HVAC

The system consists of two safety-related, 100-percent capacity air conditioning units. Each unit contains a filter assembly, cooling coil, and fan. Conditioned air is supplied through ductwork to the relay room, instrument shop, corridor, air conditioning equipment room, and Division I, II, and III cable chase areas. Return air from each area is also ducted to the air conditioning units. System supply air capacity exceeds return air capacity to provide a positive pressure in the relay room.

** When irradiated fuel is being handled in the reactor building and during core alterations and operations, with a potential for draining the reactor vessel and uncovering irradiated fuel.

room/relay room outdoor air stream. Area radiation monitors are also provided in the main control room. In the event of increasing radioactivity levels, outdoor supply air is automatically diverted through a special air filter train.

Originally, the consequences of control building ventilation and conditioning system active component failure were contained in the Unit 2 FMEA document, which is historical. FMEAs for plant systems are now performed and controlled by the design process.

9.4.1.4 Inspection and Testing Requirements

The system is designed to permit periodic inspection and maintenance of active components. Local display and indicating devices are provided for inspection of parameters such as airflow readings, temperature readings, and other measurements required to verify continued satisfactory operation of the system.

Ducted air flows are balanced to satisfy design requirements in accordance with procedures of the Associated Air Balance Council (AABC). The system is preoperationally tested to ensure it meets design requirements.

9.4.1.5 Instrumentation Requirements

9.4.1.5.1 Control Building

Description

Safety-related instruments and controls are provided for automatic and manual control of the control building HVAC system. The controls and monitors described below are located in the main control room. The control logic is shown on Figure 9.4-4.

Operation

The control building outdoor air inlet isolation dampers are controlled manually.

The control building (standby) air conditioning booster fan starts automatically when all of the following conditions exist: operating booster fan discharge air flow is low, control building supply air radiation is high, or LOCA isolation signal is present, associated control building special filter train charcoal adsorber temperature is not high-high, and the standby booster fan has not tripped on low discharge air flow. A booster fan will automatically trip when the associated control building special filter train charcoal adsorber temperature is high-high or the fan discharge air flow is low. The booster fans can also be controlled manually.

The control building air conditioning booster fans guide vanes are controlled manually.

The control building special filter trains bypass valves are controlled manually. An interlock prevents opening, or automatically trips closed, a bypass valve when the control building supply air radiation is high-high or LOCA signal is present.

Control building special filter trains electric heaters are controlled automatically by the associated heater outlet air temperature. Interlocks prevent energizing, or automatically trip, a heater when the associated special filter train air flow is low or the associated booster fan is not running.

Monitoring

Indicators are provided for each control building special filter train to monitor the following:

1. Outlet temperature.
2. Heater inlet temperature.
3. Heater outlet temperature.

Recorders are provided for each control building special filter train overall differential pressure and air flow.

Alarms are provided for:

1. Control building special filter trains inoperable.
2. Control building special filter trains system trouble.
3. Control building ventilation system trouble.
4. Control building booster fans auto start and auto trip/fail to start.
5. Process airborne radiation monitor activated.
6. Control building area radiation monitor activated.

9.4.1.5.2 Main Control Room

Description

Safety-related instruments and controls are provided for automatic and manual control of the main control room HVAC system. The controls and monitors described below are located in the main control room. The control logic is shown on Figure 9.4-4.

unit cooler is started or stopped, respectively. The dampers can also be controlled manually. An interlock prevents closing a damper when the associated fan is running.

The electrical tunnels smoke removal fans are controlled manually. Interlocks prevent starting, or automatically trip, a fan when the associated fan system damper is not fully open, the associated fan discharge damper is not fully open, or the associated unit cooler discharge damper is not fully closed.

The electrical tunnels smoke removal fans suction dampers are controlled manually. An interlock prevents opening, or automatically trips closed, a damper when the associated electrical tunnel unit cooler discharge damper is not fully closed.

The electrical tunnels smoke removal fans discharge dampers open or close automatically when the associated fan is started or stopped, respectively. The dampers can also be controlled manually. An interlock prevents manually closing a damper unless the associated fan is stopped.

The electrical tunnels makeup air dampers open or close automatically when the associated fan is started or stopped, respectively. The dampers can also be controlled manually.

The cable areas smoke removal fans are controlled manually. Interlocks prevent starting, or automatically trip, a fan when the associated cable area smoke removal section damper is not fully open or the associated cable area makeup air damper is not fully open.

The cable areas smoke removal suction dampers are controlled manually. An interlock prevents opening, or automatically trips closed, a damper when the associated basement cable spreading area unit cooler discharge damper is not closed.

The cable area smoke removal dampers for the various individual cable areas are controlled manually.

The cable areas makeup air dampers are controlled manually.

The cable chase smoke removal dampers are controlled manually.

The cable chase, cable shaft, and east entrance unit heaters and fans are controlled locally. The unit heaters and fans are controlled automatically by the associated space temperature. An interlock prevents a unit heater from energizing unless the associated fan is running. Each unit heater can also be controlled manually.

The 24-V battery rooms and computer battery room exhaust fans are controlled locally. The standby exhaust fan starts automatically

when the operating fan discharge air flow is low. An interlock automatically trips an operating exhaust fan when its discharge air flow is low.

The records storage vault air conditioning unit is controlled locally, manually, and automatically by the vault air temperature.

Monitoring

Indicators are provided for each electrical tunnel unit cooler return air temperature.

Alarms are provided for:

1. North and south tunnels unit coolers trouble.

2. Cable area unit coolers trouble.

9.4.2 Reactor Building Heating, Ventilating, and Air Conditioning System

The reactor building HVAC system is shown schematically on Figure 9.4-8, a through h, j, k, l. Design data of principal equipment utilized in the system are listed in Table 9.4-3 (Historical). The HVAC system consists of the following subsystems:

1. Drywell cooling.

2. Primary containment purge.

3. All other reactor building areas, including spent fuel pool areas.

9.4.2.1 Design Bases

The design bases for the three subsystems are as follows.

9.4.2.1.1 Drywell Cooling

Power Generation Design Basis

Provide an environment that ensures optimum performance of equipment, within the temperature limits shown in Table 9.4-1.

Safety Design Basis

Provide seismically-qualified ductwork and accessories to protect adjacent safety-related equipment in the event of a design basis earthquake (DBE). The system is designed to nonnuclear safety standards and is not required for safe shutdown of the plant.

1. All safety-related components are designed to Safety Class 2 and 3 criteria and Category I requirements. Safety-related components are located so that failure of a portion of other nonessential systems does not prevent operation of any safety-related system.

2. Safety-related components have sufficient redundancy to meet the single active failure criteria. Originally, the FMEA of the reactor building HVAC system was contained in the Unit 2 FMEA document, which is historical. FMEAs for plant systems are now performed and controlled by the design process.

3. Redundant isolation valves in each line penetrating the primary containment are in accordance with ASME Section III. The piping between the isolation valves is Safety Class 2 and both the valves and piping are designed to Category I. All other system piping is seismically supported. The inboard end of each 12-in and 14-in CPS isolation valve located inside the primary containment is provided with a QA Category I debris screen to prevent entrainment of foreign matter in the valve seat.

4. All primary containment penetrations associated with the reactor building HVAC have redundant isolation valves. The valves are designed, manufactured, and "N" stamped Safety Class 2 in accordance with ASME Section III and are designed to operate in the event of a postulated SSE (Category I).

5. Radiation monitors located on the exhaust air ducts monitor air exhausted from the reactor building and transmit an isolation signal upon indication that the radiation level exceeds a preset level. Refer to Section 11.5 for a discussion of the process radiation monitoring system.

6. The reactor building is maintained at a negative pressure with respect to the atmosphere during normal plant operation by bypassing supply air from the discharge side of the supply fans back into the supply side of the supply ventilation air handling unit assembly. During emergency operation, the SGTS (Section 6.5.1) maintains the reactor building at a negative pressure with respect to the atmosphere.

7. The reactor building floor and equipment drain system sumps are vented through the reactor building ventilation exhaust system to minimize the release of radioactive material to the surrounding areas during normal plant operation (Section 9.3.3).

8. Temperatures in the drywell zones are computer monitored and annunciated in the main control room through a common alarm.

THIS PAGE INTENTIONALLY BLANK

9. The safety-related equipment is supplied from the Class 1E power distribution system and, in case of LOOP, receives its power supply from redundant standby onsite power sources. The nonsafety-related components of the system are supplied from non-Class 1E power sources.

10. IAS and GSN relief valve discharge lines are directly connected to the reactor building ventilation exhaust system to preclude nitrogen being discharged into surrounding areas during normal operation of the plant.

9.4.2.4 Testing and Inspection Requirements

The system is preoperationally tested to ensure it meets design requirements.

Ducted air flows are balanced to satisfy design requirements in accordance with procedures of the AABC. The system is designed to permit periodic inspection and maintenance of active components.

9.4.2.5 Instrumentation Requirements

9.4.2.5.1 Drywell Cooling

Description

Instruments and controls are provided for manual control of the drywell unit coolers. The controls and monitors described below are located in the main control room. The control logic is shown on Figure 9.4-9.

Operation

The drywell unit coolers are controlled manually. Interlocks prevent starting, or trip automatically, the unit coolers when any of the associated RBCLCW containment isolation valves are closed. The isolation valves' closed interlock can be overridden by a LOCA keylock switch.

Monitoring

Recorders are provided for drywell unit coolers suction and discharge air temperatures.

Alarms are provided for:

1. Drywell unit cooling groups system trouble.

2. Drywell unit coolers vibration high.

3. Drywell unit cooling groups LOCA override.

3. Drywell personnel hatch radiation level.

Alarms are provided for:

1. HVAC systems trouble.
2. HVAC systems emergency recirculation air temperature high.
3. Unit coolers auto trip/fail to start, auto start, and air flow low.
4. Above/below refueling floor air flow low.
5. Test dampers open.
6. HVAC systems inoperable.
7. Area radiation monitor activated.
8. Reactor building head cavity evacuation filter trouble.
9. Unit coolers motor overload.
10. Reactor building exhaust/service water injection differential temperature alarm low and low-low.

9.4.3 Radwaste Building Heating, Ventilating, and Air Conditioning System

The radwaste building HVAC system is shown schematically on Figures 9.4-10a through 9.4-10e. Design data of principal equipment utilized in the system are listed in Table 9.4-4 (Historical). The HVAC system consists of the following subsystems:

1. Supply air.
2. Unit heaters.
3. General area exhaust.
4. Equipment exhaust.
5. Liner filling hood exhaust.
6. Smoke exhaust.

In addition to the aforementioned systems, radwaste decontamination areas and radwaste control room HVAC subsystems also are shown schematically on Figure 9.4-10. Design data of principal equipment utilized in the system are listed in Table 9.4-4 (Historical). The HVAC system consists of the following subsystems:

1. Radwaste decontamination general area air conditioning.
2. Radwaste decontamination clean area return/exhaust.
3. Radwaste control room air conditioning.
4. Radwaste control room return/exhaust.
5. Radwaste decontamination dirty area and chemistry laboratory return/exhaust.
6. Postaccident sampling equipment exhaust.
7. Chemistry laboratory air conditioning.

9.4.3.1 Design Bases

The design bases for the system are:

1. Provide an environment that ensures habitability of the areas served, consistent with personnel comfort and optimum performance of equipment, within the temperature limits shown in Table 9.4-1.
2. Provide the means for movement of air from clean areas to areas of progressively greater potential contamination prior to final exhaust. This serves to prevent the migration of airborne contaminants from potentially contaminated areas into clean areas.
3. Exhaust more air from the building than is being supplied, thereby maintaining the building at a negative pressure to inhibit the exfiltration of airborne contaminants.
4. Provide a smoke exhaust system for the asphalt storage tank cubicle, and for all solid waste areas of the building, to be used only in the event of fire and testing.
5. Provide high-efficiency filtration of all exhaust air, except smoke exhaust, prior to discharge to atmosphere through the reactor/radwaste building vent.
6. Monitor all exhaust air, except smoke exhaust, for radioactive contaminants (Section 11.5) prior to discharge to atmosphere through the reactor/reactor building vent.
7. Supply more air to the radwaste control room than is being returned, thereby maintaining the control room at a positive pressure to inhibit the infiltration of airborne contaminants.

9.4.3.2 System Description

9.4.3.2.1 Supply Air Subsystem

The radwaste building HVAC supply air subsystem consists of one air handling unit, distribution ductwork, accessories, and controls. The air handling unit components include an air intake, prefilter, filter, heating coil, cooling coil, two 100-percent capacity vaneaxial fans, and control dampers. One fan serves as a standby. The prefilter and filter are of the disposable bag type and function to remove dust particles from the outdoor air. The glycol heating coil and chilled water cooling coil maintain the required air temperature. Glycol is supplied to the heating coil from the plant glycol heating system (Section 9.4.11). Chilled water is supplied to the cooling coil from the plant chilled water system (Section 9.4.10).

During normal plant operation the supply air subsystem operates continuously, providing heated or cooled air. The subsystem is balanced to supply slightly less air than is exhausted, thereby maintaining a negative pressure and inhibiting the exfiltration of air from the building.

9.4.3.2.2 Unit Heaters Subsystem

Electric unit heaters are provided to offset building transmission heat losses, supplementing the heating coil in the supply air subsystem unit.

Each electric unit heater includes an electric heating element, propeller fan, casing with fan guard, and a discharge diffusion device. Each unit heater is controlled thermostatically so that, when required for air circulation, the unit heater fan will operate with the heating element de-energized.

9.4.3.2.3 General Area Exhaust Subsystem

The general area exhaust subsystem operates continuously during normal plant operation. Exhaust air from general areas is discharged by a 100-percent capacity vaneaxial exhaust fan through an exhaust filter train to the reactor/radwaste building vent. A standby exhaust fan and filter train permit operation on a rotating basis.

Exhaust ductwork is arranged to maintain the preferred direction of air flow, which is to draw air from areas of low potential radioactive contamination into and through areas of higher potential radioactive contamination before filtering and exhausting it from the building.

The general area exhaust fans are used for smoke removal in the event of fire in the building. This is accomplished by means of a normally closed bypass duct around each filter train. The

bypass duct damper will be opened by a manual switch, when necessary.

Each filter train consists of the following components:

1. Medium-efficiency filters to remove coarse particulates from the air stream. The filters are designed for 35-percent efficiency based on the ASHRAE Std. 52-70 test method.

2. HEPA filters for essentially complete removal of fine airborne particulates. The filters are of water-repellent and fire-resistant construction and are designed for a minimum efficiency of 99.97 percent, on a 0.3-micron DOP (dioctylpthalate) test. The HEPA filters are fabricated in accordance with MIL-F-51068 and MIL-STD-282 and carry an Underwriters' Laboratories (UL) label.

9.4.3.2.4 Equipment Exhaust Subsystem

The equipment exhaust subsystem operates continuously during normal plant operation. Exhaust air from tanks and potentially contaminated equipment is ducted to a separate 100-percent capacity centrifugal fan and is then discharged through an exhaust filter train to atmosphere through the reactor/radwaste building vent. A standby exhaust fan and filter train permit operation on a rotating basis.

Effluent from the equipment exhaust subsystem is continuously monitored for noble gas activity by the on-line isotopic monitoring system. Iodine and particulate activity is determined by laboratory analysis of filters in the combined reactor/radwaste building vent effluent monitoring system (Section 11.5).

Each filter train consists of medium-efficiency and HEPA filters as previously described in Section 9.4.3.2.3.

9.4.3.2.5 Liner Filling Hood Exhaust Subsystem

The liner filling hood exhaust subsystem is started before the extruder-evaporator is started. Exhaust air from the hood is discharged by a separate 100-percent capacity centrifugal fan, through medium-efficiency and HEPA filters, to the radwaste building main exhaust duct.

9.4.3.2.6 Smoke Exhaust Subsystem

The smoke exhaust subsystem is placed in operation manually as the result of a smoke alarm or fire alarm in the asphalt storage tank cubicle. The exhaust air is discharged directly to the atmosphere through louvers by an axial-centrifugal exhaust fan. When the smoke exhaust subsystem is operating, the general area

exhaust passage to the asphalt storage tank cubicle is manually closed. This action prevents smoke migration from the cubicle.

THIS PAGE INTENTIONALLY BLANK

9.4.3.2.13 Chemistry Laboratory Air Conditioning Unit

The chemistry laboratory air conditioning unit consists of a single 100-percent packaged air conditioning unit. During normal operation, the air conditioning unit operates continuously, as a supplement to the radwaste decontamination dirty area return/exhaust ventilation system, to maintain desired temperature and humidity conditions in the chemistry laboratory.

9.4.3.3 Safety Evaluation

The radwaste building HVAC system has no safety-related function. Failure or malfunction of the system will not compromise any safety-related system or component or prevent safe reactor shutdown. The following features are incorporated in the design of the system to ensure system reliability and to minimize the release of airborne radioactivity:

1. One-hundred percent standby capacity of the main exhaust fans and filter trains ensures full system capacity with any unit inoperative due to equipment failure of maintenance outage.

2. All exhaust air is passed through a high-efficiency filter train before discharge, thus minimizing the release of radioactive contaminants.

3. All exhaust air from the building is monitored at the reactor building/radwaste building vent by an off-line isotopic monitor for gaseous activity. Iodine and particulate sample cartridges are analyzed isotopically at the end of the sample acquisition period.

In addition to the above, the radwaste decontamination area, radwaste control room HVAC systems, and postaccident sampling equipment exhaust system have no safety-related function. Failure or malfunction of the systems will not compromise any safety-related systems or component or prevent safe reactor shutdown.

9.4.3.4 Testing and Inspection Requirements

The system is designed to permit periodic inspection and maintenance of active components. Local display and indicating devices are provided for periodic inspection of parameters such as filter pressure drops, air flow readings, temperature readings, and other measurements required to verify continued satisfactory operation of the systems.

Duct air flows are balanced to satisfy design requirements in accordance with procedures of the AABC.

The system is preoperationally tested to ensure it meets design requirements (Chapter 14).

9.4.3.5 Instrumentation Requirements

Description

Instruments and controls are provided for automatic and manual control of the radwaste building HVAC system. Except where noted, the controls and monitors are located on local panels in the radwaste building. The control logic is shown on Figure 9.4-11.

Operation

The fans, dampers, heaters, and air conditioning units are controlled automatically and manually from local panels in the radwaste building.

Monitoring

Alarms are provided for:

1. Radwaste building ventilation system trouble (main control room).

2. Radwaste building area radiation monitor activated (main control room).

9.4.4 Turbine Building Heating, Ventilating, and Air Conditioning System

The turbine building HVAC system is shown schematically on Figures 9.4-12a through 9.4-12d. Design data of principal equipment utilized in the system are listed in Table 9.4-5 (Historical). The HVAC system consists of the following subsystems:

1. Supply air.

2. Exhaust air.

3. Unit coolers.

4. Unit heaters.

5. Sample room air conditioning.

6. Charcoal decay-bed room air conditioning.

7. Elevator machine rooms ventilation.

8. Smoke removal.

9.4.5 Service Building Heating and Ventilating System

The service building heating and ventilating system, shown schematically on Figure 9.4-2, serves the following areas:

1. Foam room and entrance corridor
2. Access passageway
3. Service water valve pit
4. I&C Shop (el 261')

Design data of principal equipment utilized in the system are listed in Table 9.4-6 (Historical).

9.4.5.1 Design Bases

The design bases for the system are:

1. To provide an environment that ensures habitability of the areas served, consistent with personnel comfort and optimum performance of equipment, within the temperature limits shown in Table 9.4-1.
2. The system is designed to nonnuclear safety standards and is not required for safe shutdown of the plant.
3. To provide filtered and tempered outdoor air for the I&C Shop.

9.4.5.2 System Description

The foam room of the service building is ventilated by one roof-mounted, 100-percent capacity exhaust roof ventilator and one outdoor air supply hood. The system is a basic once-through design. Outdoor air is induced through the intake supply hood and exhausted by the roof ventilator to maintain the space temperature. An individual space thermostat starts the fan and opens its associated damper if the temperature exceeds the thermostat setpoint.

The access passageway area is ventilated by one 100-percent capacity supply roof ventilator and one 100-percent capacity exhaust roof ventilator. The supply roof ventilator draws air from outdoors and discharges through ductwork to the ventilated area. Air from this area is exhausted, via ductwork, by the exhaust roof ventilator.

The system serving the I&C Shop (el 261') consists of a rooftop air conditioning unit with distribution ductwork and associated controls. The packaged rooftop air conditioning unit utilizes a direct-expansion cooling coil with an air-cooled condensing section. The unit contains an outdoor air/recirculation air

mixing section with mixing dampers, an air filter, electric preheat coil, and one 100-percent capacity centrifugal fan.

Electric baseboard heaters are provided to offset building transmission heat losses, supplementing the preheat coil in the packaged rooftop air conditioning unit.

Thermostatically-controlled electric unit heaters maintain the foam room, entrance corridor, access passageway and the service water valve pit above the minimum design temperature during the winter. An electric duct heater in the access passageway supply air ductwork preheats the supply air to maintain a preset minimum temperature.

9.4.5.3 Safety Evaluation

The service building heating and ventilating system has no safety-related function. Failure or malfunction of the system will not compromise any safety-related system or component or prevent safe reactor shutdown.

9.4.5.4 Testing and Inspection Requirements

The system is designed to permit periodic inspection and maintenance of active components. Ducted air flows are balanced to satisfy design requirements in accordance with procedures of the AABC. The system is preoperationally tested to ensure it meets design requirements.

9.4.5.5 Instrumentation Requirements

Description

Instruments and controls are provided for automatic and manual control of the service building heating and ventilating, and air conditioning system. The controls and monitors are located locally. The control logic is shown on Figure 9.4-14.

Operation

The foam room exhaust roof ventilator is controlled automatically by an area thermostat. The ventilator can also be controlled manually.

The foam room outdoor air intake damper has been abandoned in place (closed). Intake of air is provided by roof-mounted ventilator and a backdraft damper.

The access passageway supply roof ventilator is controlled automatically by the access passageway area thermostat. The supply ventilator can also be controlled manually.

The access passageway duct heater is controlled automatically by space temperature, but can be energized only when the supply

ventilator is running, the associated duct air flow is normal, and thermal cutout switches are reset.

The access passageway exhaust roof ventilator starts automatically when the supply ventilator is running and stops automatically when the supply ventilator is not running. The exhaust ventilator also can be controlled manually.

The I&C shop air conditioning system runs continuously, providing heated or cooled air, and is controlled automatically by a space heating and cooling thermostat. The outdoor air/recirculation mixing dampers modulate in response to a mixed air thermostat self contained in the unit to achieve maximum benefit of outdoor air cooling. Electric baseboard heaters are individually controlled by self-contained adjustable thermostats.

Unit heaters in the foam room, entrance corridor, access passageway and the service water valve pit are controlled automatically by area thermostats. An interlock prevents a unit heater electric heating coil from energizing unless the integral unit heater fan is running. The fan also can be started and stopped manually.

9.4.6 Diesel Generator Building Heating, Ventilating, and Air Conditioning System

The diesel generator building HVAC system is shown schematically on Figure 9.4-15a.

9.4.6.1 Design Bases

The design bases for the system are:

1. Provide an environment that ensures habitability of the areas served, consistent with personnel comfort, the diesel generators' operating mode, and optimum performance of equipment, within the temperature limits shown in Table 9.4-1.

2. Provide a normal-duty outdoor air ventilation system for removal of combustible fumes.

3. Provide a safety-related and seismically-qualified cooling system for each of the three diesel generator control rooms.

4. Provide a safety-related and seismically-qualified emergency-duty outdoor air ventilation system for each diesel generator room general area, operating when the respective diesel generator is started.

9.4.6.2 System Description

The diesel generator building HVAC system is divided into four subsystems, as follows:

1. Normal-duty heating.
2. Normal-duty ventilation.
3. Control room cooling.
4. General area emergency-duty ventilation.

Design data of principal equipment utilized in the system are listed in Table 9.4-7 (Historical).

9.4.6.2.1 Normal-Duty Heating

The diesel generator rooms are heated by thermostatically-controlled electric unit heaters, sized to maintain the rooms above the minimum design temperature (Table 9.4-1) during the winter.

9.4.6.2.2 Normal-Duty Ventilation

Each of the three diesel generator rooms has a 100-percent capacity fan that exhausts room air to the atmosphere through motor-operated dampers and associated ductwork. Makeup air is induced into each room from an adjacent corridor through fire damper-protected openings. The corridor is provided with a supply air unit consisting of a 100-percent capacity fan, filter section, electric heating coil, motor-operated damper, and associated ductwork. All openings to the atmosphere are protected by tornado dampers and are missile-proof.

9.4.6.2.3 Diesel Generator Control Room Cooling

The separate control room serving each diesel generator room is equipped with a safety-related and seismically-qualified unit cooler, and associated ductwork, to maintain the room below the maximum design temperature (Table 9.4-1). Cooling water for the unit coolers is provided from the SWP system (Section 9.2.1).

9.4.6.2.4 General Area Emergency Ventilation

Each diesel generator room has an emergency ventilation system, designed to maintain the space below the maximum design temperature (Table 9.4-1) for efficient equipment operation. Outdoor air is induced into each room through air-operated dampers and associated ductwork. Two 50-percent capacity vaneaxial fans with associated motor-operated dampers and ductwork discharge air to the atmosphere and/or recirculate it back into the room, depending on the space temperature. All openings to the atmosphere are missile and tornado protected.

9.4.6.3 Safety Evaluation

The normal-duty heating and normal-duty ventilation subsystems are not safety related or seismically qualified. Failure or malfunction of these subsystems will not compromise any safety-related system or component or prevent safe reactor shutdown.

The control room cooling and general area emergency-duty ventilation subsystems are safety related and seismically qualified and are necessary to achieve and maintain a safe shutdown condition.

Originally, the FMEA of the diesel generator building HVAC system was contained in the Unit 2 FMEA document, which is historical. FMEAs for plant systems are now performed and controlled by the design process.

9.4.6.4 Testing and Inspection Requirements

The system is designed to permit periodic inspection and maintenance of active components.

Ducted air flows are balanced to satisfy design requirements in accordance with procedures of the AABC.

The system is preoperationally tested to ensure it meets design requirements.

9.4.6.5 Instrumentation Requirements

Description

Safety-related instruments and controls are provided for automatic and manual control of the HVAC system. Except as noted, the controls and monitors are located in the main control room. The control logic is shown on Figure 9.4-16.

Operation

Each diesel generator room emergency ventilation exhaust fan starts automatically when the associated diesel generator start signal is activated. The exhaust fans are de-energized automatically upon a loss of inlet air flow. Each exhaust fan can be controlled manually. The exhaust fans for Divisions I and II also can be started manually from the local panel.

Each diesel generator room inlet air damper is interlocked with the associated exhaust fan, to open when the exhaust fan is started and to close when the exhaust fan is stopped. Each inlet air damper can be controlled manually.

Each pair of diesel generator room exhaust air and recirculation air dampers is controlled automatically by the associated room

thermostat when the exhaust fan is running. The recirculation air damper opens and the exhaust air damper closes when the exhaust fan is stopped.

Each diesel generator control room unit cooler is controlled automatically by the associated control room thermostat. Each unit cooler also can be controlled manually.

Local controls are provided for the makeup air fan, makeup air heating coil, and makeup air damper; and each unit heater, normal-duty exhaust fan, and normal-duty exhaust damper.

Monitoring

Local thermostats are provided for temperature indication and adjustment. Indicators are provided in the main control room for each standby diesel generator room temperature.

Alarms are provided for:

1. Standby diesel generator room normal ventilation system trouble.

2. Standby diesel generator room divisional ventilation system inoperable.

3. Standby diesel generator room divisional ventilation system trouble.

9.4.7 Miscellaneous Buildings' Heating, Ventilating, and Air Conditioning Systems

The miscellaneous buildings' heating and ventilating or HVAC systems are shown schematically on Figure 9.4-2 and serve the following buildings and areas:

1. Screenwell building.

2. Service water pump bays.

3. Fire pump rooms.

4. Demineralizer water storage tank building.

5. CST building.

6. Electrical bay.

7. Screenhouse.

8. Chiller building.

9. CWS chemical injection and analysis facility.

Design data of principal equipment utilized in the various heating and ventilating and HVAC systems are listed in Table 9.4-8 (Historical).

9.4.7.1 Design Bases

The design bases for the systems are:

1. Provide environments that ensure habitability of the buildings and areas served, consistent with personnel comfort and optimum performance of equipment, within the temperature limits shown in Table 9.4-1.

2. Provide filtered and tempered outdoor air for ventilation, together with heating capability for the screenwell building.

3. Provide safety-related and seismically-qualified cooling system for the service water pump bays.

4. Provide a heating system and smoke removal system for the service water pump bays.

5. Provide cooling for the electric fire pump room and outdoor air for ventilation and combustion air, together with heating capability for the diesel fire pump room.

6. Provide outdoor air for ventilation, together with heating capability for the demineralized water storage tank building, CST building, and electrical bay.

9.4.7.2 System Description

9.4.7.2.1 Screenwell Building Heating and Ventilating System

The supply air portion of the screenwell building heating and ventilating system consists of three 50-percent capacity supply fans, filters, ductwork, dampers, controls, and accessories. The system is capable of supplying 100-percent outdoor air or a combination of outdoor air and recirculated room air.

Exhaust to the atmosphere is accomplished by a combination of two roof-mounted exhaust fans and two relief vents. One relief vent is connected by ductwork to two 100-percent capacity exhaust booster fans. The exhaust booster fans draw air over the motors of the circulating water pumps and discharge the air either to the atmosphere through ductwork to the relief vent or to the supply air duct where it is used to temper makeup air from outdoors. The second relief vent is provided as a backup in the event of a failure of the exhaust booster fans.

The screen backwash pump area is ventilated with air induced from the screenwell building general area by a supply fan.

Thermostatically-controlled electric unit heaters maintain the building above the minimum design temperature (Table 9.4-1) during the winter.

9.4.7.2.2 Service Water Pump Bays' HVAC System

Each of the two service water pump bays is provided with two 100-percent capacity safety-related unit coolers to maintain the space below the maximum design temperature (Table 9.4-1). Water from the SWP system is circulated through the cooling coil of each unit cooler to provide the required cooling.

A smoke removal system consisting of an exhaust fan, isolation dampers, ductwork, controls, and accessories is provided for the service water pump bays. The smoke removal fan is connected to each bay by separate ductwork passing through missile- and tornado-protected penetrations and has an air-operated damper for isolation.

Thermostatically-controlled electric unit heaters maintain the bays above the minimum design temperature (Table 9.4-1) during the winter.

9.4.7.2.3 Fire Pump Rooms' HVAC System

The electric fire pump room is cooled by a thermostatically-controlled 100-percent capacity unit cooler utilizing fire pump water as the source of cooling. Since the room is entirely enclosed within the screenwell building, there is negligible heat loss from the room; therefore, heating capability is not provided.

Outdoor air is supplied to the diesel fire pump room for combustion and natural cooling by a 100-percent capacity fan. Two modulating air-operated dampers are capable of supplying 100-percent outdoor air or a combination of outdoor air and recirculated room air. The room is relief-exhausted to the atmosphere through a roof-mounted relief vent. The diesel engine draws combustion air from the room.

A roof-mounted exhaust fan draws air from the screenwell area through a fire damper or exhausts a portion of the supply air to the atmosphere, depending on the mode of operation of the system, to remove possible combustible fuel fumes from the vicinity of the diesel fuel oil tank.

A thermostatically-controlled electric unit heater maintains the diesel fire pump room above the minimum design temperature (Table 9.4-1) during the winter.

9.4.7.2.4 Demineralizer Water Storage Tank Building Heating and Ventilating System

Ventilation is accomplished by a 100-percent capacity, thermostatically-controlled, roof-mounted exhaust fan. Outdoor makeup air is drawn through a louver containing an air-operated damper.

Thermostatically-controlled electric unit heaters maintain the building above the minimum design temperature (Table 9.4-1) during the winter.

9.4.7.2.5 Condensate Storage Tank Building Heating and Ventilating System

Two 100-percent capacity, thermostatically-controlled, roof-mounted exhaust fans provide ventilation by inducing outdoor air through two 100-percent capacity louvers containing air-operated dampers. Two additional 100-percent capacity exhaust fans provide exhaust venting of various tanks located in the building. Ducted air from these tanks is discharged through the main stack to the atmosphere.

Thermostatically-controlled electric unit heaters maintain the building above the minimum design temperature (Table 9.4-1) during the winter.

9.4.7.2.6 Electrical Bay Heating and Ventilating System

The heat gain in this area requires two separate outdoor air ventilating systems. During the summer, the area is ventilated with outdoor air induced through air-operated dampers by two 50-percent capacity, roof-mounted exhaust fans. During the winter, ventilation is provided by a 100-percent capacity fan drawing outdoor air, or a combination of outdoor and recirculated air, through air-operated dampers. This air is relief-exhausted to the atmosphere through a roof-mounted relief vent.

Thermostatically-controlled electric unit heaters maintain the area above the minimum design temperature (Table 9.4-1) during plant shutdown.

9.4.7.2.7 Screenhouse

Thermostatically-controlled electric unit heaters maintain the building above the minimum design temperature (see Table 9.4-1) during the winter.

9.4.7.2.8 Chiller Building

Two thermostatically-controlled, roof-mounted exhaust fans provide ventilation by inducing outdoor air through a wall-mounted louver containing an air-operated damper and a roof-mounted air supply hood.

Thermostatically-controlled electric unit heaters maintain the building above the minimum design temperature (see Table 9.4-1) during the winter.

9.4.7.2.9 CWS Chemical Injection and Analysis Facility

Heating and air conditioning of the laboratory area is provided by an air handling unit consisting of a supply fan, direct-expansion cooling coil, filters, electric heating coil, and a remote air-cooled condensing unit. Supply air is heated/cooled, filtered, and humidified as required in order to maintain the desired space temperature and relative humidity. Controls are electric.

Heating and ventilation for the chemical injection/storage area is provided by two 50-percent capacity exhaust fans and two 50-percent capacity supply fans with electric heating coils, providing tempered air for the heating season and mechanical ventilation, as required, throughout the remainder of the year.

9.4.7.3 Safety Evaluation

The only part of the miscellaneous buildings' HVAC systems that is safety related is the cooling portion of the service water pump bays' HVAC system. Failure of this system to maintain the space temperature below the design temperature could result in the loss of operability of the service water pumps in the affected bay. This potential problem is mitigated by the provision of redundant pumps. If one pump bay is lost due to a failure of its cooling system, the redundant pump bay will replace it. The spare unit cooler in each pump bay provides an additional margin of safety.

Originally, the FMEA of the service water pump bays' HVAC system was contained in the Unit 2 FMEA document, which is historical. FMEAs for plant systems are now performed and controlled by the design process.

The other miscellaneous buildings' systems have no safety-related function and failure or malfunction of the systems will not compromise any safety-related system or component or prevent safe reactor shutdown.

9.4.7.4 Testing and Inspection Requirements

The systems are designed to permit periodic inspection and maintenance of active components. Local display and indicating devices are provided for periodic inspection of parameters such as airflow readings, temperature readings, and other measurements required to verify continued satisfactory operation of the systems.

Ducted airflows are balanced to satisfy design requirements in accordance with procedures of the AABC. The system is preoperationally tested to ensure it meets design requirements.

9.4.7.5 Instrumentation Requirements

Description

Instruments and controls are provided for automatic and manual operation of the HVAC system. The controls for the service water pump bay unit coolers described in the following paragraphs are located in the main control room. All other controls are local. The control logic is shown on Figure 9.4-17.

Operation

The screenwell building supply fan starts automatically if either of the other fans is not running and is de-energized automatically upon a loss of discharge airflow. The fans also can be controlled manually.

In the normal mode, modulation of the screenwell building outdoor air dampers and recirculation air dampers is controlled automatically by the screenwell building space temperature, provided a supply fan is running. When no supply fan is running, the outdoor air dampers open and the recirculation air dampers close automatically.

The screenwell building roof fans start automatically when the outdoor air damper is more than 40-percent open and stop automatically when the outdoor air damper is more than 60-percent closed. The fans also can be controlled manually.

The circulating water pumps' exhaust booster fans (located in screenwell building) start automatically when any pump is running and there is a low discharge air flow in the normally operating fan. The exhaust booster fans stop automatically when no circulating water pump is running or upon a loss of booster fan discharge air flow. The fans also can be controlled manually.

The service water pump bays' smoke removal fan (located in screenwell building) is started and stopped manually. An interlock prevents operation of the fan unless one of the smoke removal dampers is open. The service water pump bay smoke removal dampers are controlled manually. An override switch is provided in the main control room for smoke removal dampers.

The service water pump bays' unit coolers (located in screenwell building) are controlled automatically by the associated bay space temperature. The unit coolers also can be controlled manually from the control room.

The electrical bay supply fan is controlled manually. The electrical bay recirculation and outdoor dampers are controlled

automatically by the space temperature, provided the supply fan is running. The recirculation damper closes and the outdoor air damper opens when the supply fan is not running.

The diesel fire pump room normal ventilation air fan is controlled manually.

The diesel fire pump room ventilation air fan starts automatically when the diesel engine-driven fire pump is started, and is stopped manually. The fan also can be controlled manually.

The diesel fire pump room ventilation air fan dampers are controlled automatically by the room space temperature when the diesel fire pump room ventilation fan is running. The dampers assume their respective failed positions (outdoor air damper open, recirculation air damper closed) when there is a loss of control power, or a loss of control air, or the fan is stopped.

The CST building, electrical bay, chiller building, and demineralized water storage tank building roof fans are controlled automatically by the associated building area thermostats. Each roof fan can also be controlled manually.

The CST building, electrical bay, and demineralized water storage tank building ventilation air inlet dampers open or close automatically, provided its associated roof fan is running or not running, respectively. The dampers also can be controlled manually.

The chiller building ventilation system consists of two roof fans; one has an associated inlet damper while the inlet damper for the other has been abandoned in place (closed) and replaced with a roof-mounted ventilator for intake of outside air. The active inlet damper opens or closes automatically, provided its associated roof fan is running or not running, respectively. The damper can also be controlled manually.

The screenwell building, screenhouse electrical bay, CWS chemical injection and analysis facility, diesel fire pump room, CST building, and the chiller building unit heaters and fans are controlled automatically by the associated space temperature. An interlock prevents a unit heater coil from energizing unless the unit heater fan is running. Each unit heater and fan can be stopped by a common manual switch.

The demineralized water storage tank building unit heaters and fans are controlled automatically by the associated space temperature. The unit heaters also can be controlled manually.

The electric motor fire pump room unit cooler is controlled automatically by the room space temperature. The unit cooler also can be controlled manually.

The screen backwash pump area air circulation fan is controlled manually.

The CST building ventilation fan starts automatically if the other fan is not running and is de-energized automatically upon loss of its discharge airflow. The fans also can be controlled manually.

Monitoring

Alarms are provided in the control room for:

1. Screenwell building ventilation system trouble.
2. Electrical bay area ventilation system trouble.
3. CST building ventilation system trouble.
4. Service water pump bay unit cooler motor overload.
5. Service water pump bay ventilation system inoperable.
6. Screenwell building, smoke detected.
7. Chiller building roof ventilation fan motor overload.

9.4.8 Auxiliary Boiler Building Heating and Ventilating System

The auxiliary boiler building heating and ventilating system is shown on Figure 9.4-2c (Misc. HVAC Systems). Design data of principal equipment utilized in the system are listed in Table 9.4-9 (Historical).

The heating and ventilating system consists of the following subsystems:

1. Supply air.
2. Exhaust air.
3. Unit heaters.

9.4.8.1 Design Bases

The design bases for the system are:

1. To provide an environment that ensures habitability of the areas served, consistent with personnel comfort and optimum performance of the equipment, within the temperature limits shown in Table 9.4-1.
2. The system is designed to nonnuclear safety standards and is not required for safe shutdown of the plant.

9.4.8.2 System Description

9.4.8.2.1 Supply Air Subsystem

The auxiliary boiler building heating and ventilating supply air subsystem consists of two redundant, 100-percent capacity, roof-mounted air handling units, distribution ductwork, accessories, and controls. The supply air subsystem has been taken out of service by placing the air handling unit control switches in the pull-to-lock position. However, supply air can be induced to the room space through ductwork that is common to both air handling units by manually opening associated dampers as necessary. By taking the air handling units out of service and closing the recirculation damper, potential unmonitored release of radioactive air to the atmosphere through the air handling unit inlet is precluded. The air handling unit supply fans may be operated manually to supply air to the room as necessary, provided the recirculation damper is closed and the pressure inside the room is subatmospheric.

9.4.8.2.2 Exhaust Air Subsystem

The subsystem consists of two redundant, 100-percent capacity fans, ductwork, accessories, and controls.

The fans are served by common ductwork, both inlet and discharge. Fan discharge is ducted to the reactor building vent, where the air is monitored for radioactive airborne contamination (Section 11.5) prior to discharge to atmosphere.

9.4.8.2.3 Unit Heaters Subsystem

Electric unit heaters are provided to offset building transmission heat losses.

Each unit heater includes an electric heating element, propeller fan, casing with fan guard, and a discharge air diffuser. Each unit heater is controlled thermostatically so that, when required for air circulation, the unit heater fan can be operated with the heating element de-energized.

9.4.8.3 Safety Evaluation

The auxiliary boiler building heating and ventilating system has no safety-related function. Failure or malfunction of the system will not compromise any safety-related system or component or prevent safe reactor shutdown. The following features are incorporated in the design of the system to maximize system reliability and efficiency:

1. The redundant exhaust fan is provided to ensure full system capacity with any unit inoperative due to equipment failure or maintenance outage.

2. Operating and standby equipment can be sequenced periodically to ensure uniform wear.

9.4.8.4 Testing and Inspection Requirements

The system is designed to permit periodic inspection and maintenance of active components. Local display and indicating devices are provided for periodic inspection of parameters such as air flow readings, temperature readings, and other measurements required to verify continued satisfactory operation.

The system is preoperationally tested to ensure that it meets design requirements.

9.4.8.5 Instrumentation Requirements

Description

Instruments and controls are provided for manual control of the auxiliary boiler building ventilating system, and automatic/manual control of the unit heaters subsystem. The controls described below are mounted on a local panel. The monitors described below are located in the main control room. Control logic is shown on Figure 9.4-18.

Operation

Each auxiliary boiler building ventilation air exhaust fan is controlled manually with the recirculation damper closed and the exhaust damper open.

The auxiliary boiler room air handling unit discharge air dampers are tripped closed automatically since neither fan is running. Each air damper can also be controlled manually as necessary to allow induced air into the room.

The air handling unit supply fans may be operated manually to supply air to the room as necessary, provided the recirculation damper is closed and the pressure inside the room is subatmospheric.

Unit heaters are controlled automatically by area thermostats. An interlock prevents a unit heater electric heating coil from being energized unless the integral unit heater fan is running. The fan also can be started and stopped manually.

Monitoring

Alarms are provided in the control room for auxiliary boiler room ventilation system trouble.

9.4.9 Auxiliary Service Building Heating, Ventilating, and Air Conditioning System

The auxiliary service building HVAC system is shown schematically on Figures 9.4-2d and 9.4-2e. Design data of principal equipment utilized in the system are listed in Table 9.4-10 (Historical).

9.4.9.1 Design Bases

The design bases for the system are:

1. Provide an environment that ensures habitability of the areas served, consistent with personnel comfort and optimum performance of equipment, within the temperature limits shown in Table 9.4-1.

2. Provide filtered and tempered outdoor air for all air conditioned areas.

3. The system is designed to nonnuclear safety standards and is not required for safe shutdown of the plant.

9.4.9.2 System Description

9.4.9.2.1 Auxiliary Service Building and Clean Access Area

The system consists of a rooftop air conditioning unit with distribution ductwork and associated controls. The unit serves the clean access area and all areas of the auxiliary service building except the CO_2 tank room. The exhaust system consists of two fans. One removes ducted exhaust air from the potentially contaminated areas of the auxiliary service building and discharges into the turbine building on el 277', which eventually exits to the atmosphere through the main stack via turbine building exhaust fans. The other fan removes ducted exhaust air from the decontamination rooms of the auxiliary service building and discharges to the atmosphere through the reactor building vent.

The packaged rooftop air conditioning unit utilizes a direct-expansion cooling coil with an air-cooled condensing section. The unit contains an outdoor air/recirculation air mixing section with mixing dampers, an air filter, electric preheat coil, and one 100-percent capacity centrifugal fan. The preheat coil is thermostatically controlled to maintain the required leaving air temperature.

Electric unit heaters are provided to offset building transmission heat losses, supplementing the preheat coil in the packaged rooftop air conditioning unit.

Each unit heater includes an electric heating element, propeller fan, casing with fan guard, and a discharge air diffuser. Each

safety-related chilled water trains with safety-related isolation valves.

The control building chilled water subsystem is shown schematically on Figure 9.4-1a. Design data of principal equipment utilized in the subsystem are listed in Table 9.4-11 (Historical).

9.4.10.1.2 System Description

The control building chilled water subsystem supplies chilled water during normal operation, plant shutdown, and DBA conditions to air conditioning units serving the control room, relay room, remote shutdown room, and computer room.

The subsystem is closed loop, and consists of two redundant chilled water trains, A and B. Each train is capable of meeting total chilled water demand, utilizing one hermetic centrifugal water chiller, one chilled water circulating pump, one expansion tank, controls, and piping.

With one redundant (divisional) chilled water train operating, only one remote shutdown room air conditioning unit is running. The remote shutdown rooms are separated by a fire-rated wall such that the rooms are isolated. Thus, the air conditioning unit in one remote shutdown room does not provide cooling air to the other remote shutdown room. With this present system design, an auto start of a remote shutdown air conditioning unit in the same division as the redundant standby chiller initiates a start of that chiller. The chillers are sized such that the remote shutdown air conditioning unit that auto starts, based on the room temperature, does not present an adequate load for the train and places the water chiller in jeopardy of a trip. Therefore, both redundant chilled water trains are operated, with one major load (i.e., control room or relay room) assigned to each running train.

Water is provided to each chiller from the SWP system (Section 9.2.1). Each chilled water train, A and B, has separate condenser water connections to the corresponding A and B loops of the SWP system. The SWP system is capable of supplying water to the chiller condensers during all modes of plant operation.

Makeup water for the control building chilled water subsystem is normally derived from the plant makeup water system (Section 9.2.3). During accident conditions makeup water can be manually diverted from the SWP system.

9.4.10.1.3 Safety Evaluation

The control building chilled water subsystem is designed to perform during normal operation, plant shutdown, or accident conditions without loss of function. Each chilled water train is capable of meeting the total chilled water demand on the subsystem. The subsystem is designed to Category I criteria and conforms to the single-failure criterion. The subsystem receives electrical power from two offsite sources during normal operation and from redundant standby diesel generators if offsite power is lost. Equipment is located in the control building which is a tornado-proof, Category I structure. Each chiller and its associated equipment is located in a separate equipment room. The two chilled water trains are physically separated and protected with a barrier (Section 3.5.3). The walls, floor, and ceiling of each chiller equipment room are of 3-hr fire-rated construction. Doors are Class A fire doors in compliance with NFPA 80. Smoke and fire detectors are located in each equipment room and are annunciated in the main control room. Fire protection is described in Section 9.5.1. The equipment rooms are provided with ventilation and heating (Section 9.4.1).

The SWP system is a safety-related, seismically-qualified, fully redundant system, and is designed to assure an uninterruptible supply of water to the chillers. In the unlikely event both chilled water trains fail, service water can be utilized for emergency cooling. Switchover from the chilled water system to the SWP system (standby mode) is manual.

The refrigeration system of each chiller utilizes a nonflammable refrigerant, R-11 (trichlorofluoromethane), which is classified in Group 1, the least hazardous, in the safety code for mechanical refrigeration (ANSI B9.1). To prevent a refrigerant barrier failure due to loss of coolant, condenser cooling water temperature is monitored. An increase in the condenser cooling water temperature above a preset level initiates an alarm in the main control room. If corrective action is not taken, the refrigerant system high-pressure cutout stops the chiller and another alarm is initiated in the main control room.

The refrigeration system of each chiller has a rupture disc designed to relieve excess pressure. Rupture disc discharge is piped outside the building.

Originally, the FMEA of the control building chilled water systems was contained in the Unit 2 FMEA document, which is historical. FMEAs for plant systems are now performed and controlled by the design process.

9.4.10.1.4 Testing and Inspection Requirements

The subsystem is designed to permit periodic inspection and maintenance of active components. Instruments and controls are provided for testing of the subsystem during normal Station

operation or scheduled shutdown. Water flow rates are balanced and set to achieve design flow conditions. Flow elements for flow measurement are provided.

9.4.10.1.5 Instrumentation Requirements

Safety-related instrumentation and controls are provided for automatic and manual control of chilled water to the air conditioning units for the control, relay, remote shutdown, and computer rooms.

The controls and monitors described herein are located in the main control room. The control logic is shown on Figure 9.4-20.

Operation

The chilled water circulating pumps start automatically when the associated control room, relay room, remote shutdown, or computer room air conditioning fan is running. The pumps stop automatically when no fan is running or the associated chilled water flow is low. The pumps also can be controlled manually.

The chiller compressors start automatically when the associated control room, relay room, remote shutdown, or computer room air conditioning fan is running. The compressors stop automatically when no fan is running. Interlocks prevent the compressors from starting (or trip them off if running) when the associated compressor auxiliary oil pump is not running or when the chilled water flow through the evaporator is low. The chiller compressors also can be controlled manually.

The chiller compressor auxiliary oil pumps start automatically when the associated control room, relay room, remote shutdown, or computer room air conditioning fan is running. The oil pumps stop automatically when no fan is running.

The computer room air conditioning chilled water inlet valves are controlled manually. Interlocks prevent the inlet valves from opening (or trip them closed if open) when the chilled water expansion tank level is low.

The control building chilled water temperature control valves are controlled automatically by either control room temperature or humidity. The valves control chilled water flow to the associated air conditioning units. The valves open fully when the control building return air temperature is sensed at high-high.

Monitoring

Alarms are provided for:

1. Chilled water circulating pump, auto trip/fail to start, and flow low.

2. Service water to chiller no flow.

3. Chiller compressor refrigerant pressure low, refrigerant pressure high, oil pressure low, auto start, auto trip/fail to start, oil temperature high, discharge temperature high, and purge high.

4. Chilled water expansion tank water level high/low-low.

5. Chilled water system inoperable.

6. Computer room air conditioning inlet valve closed.

9.4.10.2 Ventilation Chilled Water Subsystem

9.4.10.2.1 Design Bases

The ventilation chilled water subsystem is designed in accordance with the following criteria:

1. Piping and valves are in accordance with the power piping code, ANSI B31.1.

2. Equipment conforms to the codes and standards of IEEE and NEMA MG1.

The ventilation chilled water subsystem is shown schematically on Figure 9.4-3. Design data of principal equipment utilized in the subsystem are listed in Table 9.4-11 (Historical).

9.4.10.2.2 System Description

The ventilation chilled water subsystem supplies chilled water during normal operation to cool outdoor air used for ventilation in the turbine building, normal switchgear building, radwaste building and radwaste decontamination general area.

The subsystem consists of three 50-percent capacity hot water absorption liquid chillers, two 100-percent capacity service water pumps, two 100-percent capacity chilled water circulating pumps, one expansion tank, controls, and piping.

Water is provided to each chiller from the SWP system (Section 9.2.1). Hot water is provided to the generator shell of each chiller from the plant hot water heating system (Section 9.4.12).

9.4.10.2.3 Safety Evaluation

A redundant chiller, condenser water pump, and chilled water circulating pump are provided; however, the subsystem has no safety-related function. Failure or malfunction of the system will not compromise any safety-related system or component or prevent safe reactor shutdown.

9.4.10.2.4 Testing and Inspection Requirements

The subsystem is designed to permit periodic inspection and maintenance of active components. The system is preoperationally tested to ensure it meets design requirements. Instruments and controls are provided for testing of the subsystem during normal operation or scheduled shutdown. Water flow rates are balanced and set to achieve design flow conditions. A separate flow switch functions to shut down each chiller upon loss of chilled water flow or condenser water flow.

9.4.10.2.5 Instrumentation Requirements

Description

Instruments and controls are provided for automatic and manual control of the ventilation chilled water system. The controls described below are located locally. The monitors described below are located locally and in the main control room. The control logic is shown on Figure 9.4-21.

Operation

The standby chilled water pump starts automatically when the operating pump stops and the chiller run required signal is present. Interlocks are provided to stop the pump when pump discharge pressure is sustained low, or prevent starting when the pump suction pressure is low. The pumps can also be controlled manually.

The normal switchgear building, turbine building, and radwaste building chilled water temperature control valves are automatically controlled by the associated supply air fan discharge temperature to maintain the air temperature at the setpoint.

Monitoring

Local alarms are provided for AUTO-TRIP/FAIL TO START, SUCTION AND DISCHARGE PRESSURE LOW, and MOTOR ELECTRICAL FAULT. A common alarm for ventilation chilled water trouble is located in the main control room.

9.4.11 Plant Glycol Heating System

The plant glycol heating system functions with the plant hot water heating system (Section 9.4.12) to heat outdoor makeup air used for ventilation.

Hot water from the plant hot water heating system is used to heat the ethylene glycol solution to its required design temperature. The heated glycol solution is then circulated through outdoor makeup air preheating coils, thereby preventing freezeup of the

coils when the outdoor temperature is below freezing, while heating the outdoor air to the design temperature.

9.4.11.1 Design Bases

The design bases for the system are:

1. Provide the medium needed to heat outdoor makeup air used for ventilation in the turbine building, reactor building, and radwaste building in accordance with the design temperatures listed in Table 9.4-1 while preventing freezeup of the preheating coils when the outdoor temperature is below freezing.

2. Provide piping and valves designed in accordance with ANSI B31.1 and miscellaneous equipment conforming to ASME Section VIII.

3. The system has no safety-related function. Failure or malfunction of the system will not compromise any safety-related system or component or prevent safe reactor shutdown.

9.4.11.2 System Description

The plant glycol heating system and the associated plant hot water heating system are shown on Figure 9.4-22. Design data of principal system components are listed in Table 9.4-12 (Historical).

The plant glycol heating system consists of three subsystems. One subsystem, located in the turbine building, serves the turbine building HVAC system (Section 9.4.4). The second subsystem, located in the standby gas treatment building, serves the reactor building HVAC system (Section 9.4.2). The third subsystem, located in the radwaste building, serves the radwaste building HVAC system (Section 9.4.3). The subsystems are not interconnected.

Each glycol subsystem contains one 100-percent capacity glycol heat exchanger, two 100-percent capacity glycol circulating pumps, one expansion tank, glycol addition tank, glycol drainage tank, air separator, one outdoor air preheating coil assembly, piping, valves, instrumentation, and controls.

Each glycol heat exchanger is connected to a separate hot water heating loop (Section 9.4.12). The three glycol heat exchanger loops are not interconnected.

A glycol addition tank is provided for the makeup of glycol to the system to maintain a 50/50 mixture. Makeup of glycol solution water to each glycol heat exchanger loop is from the demineralized water system (Section 9.2.3) controlled by a self-contained pressure-reducing valve.

The makeup water pumps are controlled automatically by hot water expansion tank level. An interlock starts the redundant hot water booster pump if the operating pump stops. The booster pump also stops or is prevented from starting on sustained discharge pressure low. The booster pump discharge valves are controlled automatically by the pump. The pumps and valves also can be operated manually.

The hot water heating hot water booster pumps are controlled automatically. An interlock starts the redundant pump automatically when the operating pump stops running. The pumps also can be controlled manually.

Monitoring

An alarm is provided for plant hot water heating system trouble.

TABLE 9.4-1

ENVIRONMENTAL AND SYSTEM DESIGN PARAMETERS FOR HVAC SYSTEMS

Normal Operation - Indoor Conditions

Building/Area	Temperature Range (°F)	Relative Humidity Range (%)	Pressure (in. W.G.)
Control building			
El 306'			
Control room[1]	70-85[1]	20-65	+0.125
Remaining areas	65-104	20-65	+0.125
El 288'-6"			
Relay room[3]	60-85[3]	20-65	+0.125
Computer room	60-80	20-65	+0.125
Remaining areas	65-104	20-65	+0.125
El 261'			
Remote shutdown room[4]	65-85[4]	20-65	Atmospheric
Cable chases and corridors	65-110	20-90	Atmospheric
Remaining areas	65-104	20-90	Atmospheric
El 244' and 237'			
Record storage vault	65-85	20-65	Atmospheric
Remaining areas	50-108[5]	20-90	Atmospheric
El 214'			
All areas	50-104[5]	20-90	Atmospheric
Normal switchgear building	65-104	20-90	Atmospheric
Electrical tunnels	50-104[5]	20-90	Atmospheric
Turbine building			
Overhead operating floor	50-120	20-90	Subatmospheric
Above operating floor	65-104	20-65	Subatmospheric
Below operating floor			
Equipment area			
Electrical	65-104	20-90	Subatmospheric
Non-electrical	65-110	20-65	Subatmospheric
Charcoal decay room	65-85	20-65	Subatmospheric
Sample room	65-85	20-65	Subatmospheric
Steam tunnel	65-130	20-90	Subatmospheric
Radwaste building			
Control room	70-85	20-70	Atmospheric
Equipment area			
Electrical	65-104	20-90	Atmospheric
Non-electrical	65-110	20-90	Subatmospheric

TABLE 9.4-1 (Cont'd.)

Building/Area	Temperature Range (°F)	Relative Humidity Range (%)	Pressure (in. W.G.)
Reactor building			
General areas	70-104	20-65	Subatmospheric
Pump, heat exchanger and tank rooms	70-120*	20-65	Subatmospheric
Auxiliary bays pump and heat exchanger rooms	65-120*	20-65	Subatmospheric
Auxiliary bays electrical equipment rooms	65-104	20-65	Atmospheric
Pipe cases	65-120	20-65	Subatmospheric
Drywell			
General areas	70-150	20-100	+13.84 to 27.68
Upper dome area	70-150	20-100	+13.84 to 27.68
Area beneath RPV	70-150	20-100	+13.84 to 27.68
RPV support skirt area	70-150	20-100	+13.84 to 27.68
Screenwell building			
General areas	65-104	20-90	Atmospheric
Circulating water pump area	65-104	20-90	Atmospheric
Screen backwash pump area	65-104	20-90	Atmospheric
Service water pump bays	65-104	20-90	Atmospheric
Fire pump rooms	65-104	20-90	Atmospheric
Demineralized water storage tank building	65-104	20-90	Atmospheric
Condensate storage tank building	65-104	20-90	Atmospheric
Electrical bay	65-104	20-90	Atmospheric
Service building	65-104	20-90	Atmospheric
Access passageway	65-104	20-90	Atmospheric
Auxiliary boiler building	65-104	20-90	Atmospheric/Subatmospheric
Diesel generator building			
Control rooms	65-104	20-90	Atmospheric
Remaining areas	65-125*	20-90	Atmospheric
Auxiliary service building	65-104 (5)	20-65	Atmospheric
Standby gas treatment building			
HVAC equipment rooms	65-104	20-90	Atmospheric
SGTS filter rooms	65-104	20-65	Atmospheric
Screenhouse	65-104	20-90	Atmospheric
Main stack structure	65-104	20-90	Atmospheric

TABLE 9.4-1 (Cont'd.)

Building/Area	Temperature Range (°F)	Relative Humidity Range (%)	Pressure (in. W.G.)
Chiller building	65-104	20-90	Atmospheric
CWS chemical injection and analysis facility Chemical injection/storage area	65-104	20-90	Atmospheric

* When equipment is operating. Maximum design temperature for RHR valve room (SC240140) is 134.5°F.

(1) All safety-related equipment located in the control room is qualified to an ambient temperature of 120°F within the panel. The maximum ambient temperature in the control room is limited to 90°F in accordance with Technical Specification Section 3/4.7.3, which provides a margin to account for internal temperature rise within the safety-related control room panels.

(2) Design maximum indoor temperatures for safety-related equipment are based on safety-related cooling system performance utilizing the design maximum service water temperature of 82°F and the summer outdoor design maximum temperature of 100°F dry-bulb and 73°F wet-bulb. All safety-related equipment is qualified to the specified conditions.

(3) All safety-related equipment located in the relay room is qualified to an ambient temperature of 120°F within the panel. The maximum ambient temperature in the relay room is limited to 90°F in accordance with Technical Specification Section 3/4.7.3, which provides a margin to account for internal temperature rise within safety-related relay room panels.

(4) All safety-related equipment located in the remote shutdown panel is qualified to an ambient temperature of 120°F within the panel and a maximum ambient of 104°F external to the panel.

(5) Unit coolers 2HVC*UC104, 105, 106 and 107 may be taken out of service without a LCO per Technical Specification Interpretation #25 and Safety Evaluation 93-021. Temperatures for the following areas exceed the maximum design temperatures when the above unit coolers are out of service and a LOCA occurs:

Area	Temperature °F
El 244' and 237' Remaining areas	133(6)
El 214' All areas	117(6)
Electrical tunnels	137(6)
Auxiliary services building	135(7)

(6) Equipment located in these areas is either designed to operate following a LOCA for a minimum of 100 days, or if equipment fails, it will fail safe and will not interfere with other safety functions.

(7) Areas containing safety-related equipment on el 261' have a maximum design temperature of 104°F.

NOTES: a. Summer outdoor design conditions are 93°F dry-bulb (see Note 2 for the safety-related areas) and 73°F wet-bulb.

b. Winter outdoor design conditions are -10°F dry-bulb (for computing transmission loss) and -20°F dry-bulb (for sizing outdoor makeup air heating coils).

c. The summer and winter outdoor design conditions for computing transmission loss, as referenced in Notes a and b, respectively, are based on data for Oswego, New York, derived from the Carrier System Design Manual, Part 1 (Load Estimating), 9th Printing, 1972. The use of -20°F for sizing heating coils is additional conservatism applied over and above the Carrier literature.

TABLE 9.4-2 (Historical)

DESIGN DATA OF PRINCIPAL EQUIPMENT -
CONTROL BUILDING AND NORMAL SWITCHGEAR BUILDING HVAC SYSTEMS

El 306' and Main Control Room Air Conditioning Units

Equipment Mark No.	2HVC*ACU1A, 1B
Quantity	2 (100% capacity each)
Type	Central station, draw-through

Each system includes the following components:

1. Supply Fan:	
Type	Centrifugal
Capacity, cfm	23,280
Total pressure, in W.G.	4.94
Motor, hp	40
2. Filters:	
Equipment Mark No.	2HVC*FLT1A, 1B
Type	Disposable, dual flow
Media, normal flow	Fiberglass
Media, bypass flow	Fiberglass/charcoal/ Fiberglass
Efficiency, NBS dustspot, %	
Normal flow	50
Bypass flow	99
3. Cooling Coil:	
Type	Finned, tubular
Cooling medium	Chilled water
Cooling capacity, mbh	708.0
4. Duct Heaters:	
a. Equipment Mark No.	2HVC*CH11A, 11B
Quantity	2
Type	Electric
Capacity, each, kW	60
b. Equipment Mark No.	2HVC-CH1
Quantity	1
Type	Electric
Capacity, kW	6
c. Equipment Mark No.	2HVC-CH2
Quantity	1
Type	Electric
Capacity, kW	40

TABLE 9.4-2 (Historical)
(Cont'd.)

d. Equipment Mark No.	2HVC-CH8, CH9
Quantity	2
Type	Electric
Capacity, each, kW	4.4
5. Baseboard Heaters:	
a. Equipment Mark No.	2HVC-H1K
Quantity	1
Type	Electric
Capacity, kW	1.25
b. Equipment Mark No.	2HVC-H3A, 3H, 1L
Quantity	3
Type	Electric
Capacity, each, kW	1.5
c. Equipment Mark No.	2HVC-H1A, 1B
Quantity	2
Type	Electric
Capacity, each, kW	2
d. Equipment Mark No.	2HVC-H1C, 1D, 1E, 1F, 1G, 1H, 1J, 1M, 1N, 1P, 1Q, 1R, 1S
Quantity	13
Type	Electric
Capacity, each, kW	2.5
<u>El 288' and Relay Room Air Conditioning Units</u>	
Equipment Mark No.	2HVC*ACU2A, 2B
Quantity	2 (100% capacity each)
Type	Central station, draw-through
Each system includes the following components:	
1. Supply Fan:	
Type	Centrifugal
Capacity, cfm	26,185
Total pressure, in W.G.	5.0
Motor, hp	40
2. Filter:	
Type	Disposable
Media	Fiberglass
Efficiency, NBS dustspot, %	50

TABLE 9.4-2 (Historical)
(Cont'd.)

3. Cooling Coil:	
Type	Finned, tubular
Cooling medium	Chilled water
Cooling capacity, mbh	778
4. Duct Heaters:	
a. Equipment Mark No.	2HVC*CH12A, 12B
Quantity	2
Type	Electric
Capacity, each, kW	40
b. Equipment Mark No.	2HVC-CH4
Quantity	1
Type	Electric
Capacity, kW	26
c. Equipment Mark No.	2HVC-CH3
Quantity	1
Type	Electric
Capacity, kW	6
5. Baseboard Heaters:	
Equipment Mark No.	2HVC-H2A, 2B, 2C, 2D, 2E, 2F, 2G, 2H
Quantity	8
Type	Electric
Capacity, each, kW	2.5
<u>Computer Room Air Conditioning Units</u>	
Equipment Mark No.	2HVC-ACU4A, 4B
Quantity	2 (100% capacity each)
Type	Package
Number of fans per each unit	2
Supply fan capacity, each, cfm	5,000
Total pressure, each, in W.G.(1)	1.68
Supply fan motor, each, hp	7.5
Cooling medium	Chilled water
Cooling capacity, each, mbh	350.3
Heating medium	Electric
Heating capacity, each, kW	30
Humidifier type	Infrared
Humidifier capacity, each, water, lb/hr	22.1

The units are provided with the following outdoor air booster fans connected in series:

TABLE 9.4-2 (Historical)
(Cont'd.)

Equipment Mark No.	2HVC-FN17, 18
Quantity	2 (50% s.p. each)
Type	Vaneaxial
Capacity, each, cfm	120
Total pressure, each, in W.G.(2)	0.50
Motor, each, hp	1/12

Remote Shutdown Room Air Conditioning Units

Equipment Mark No.	2HVC*ACU3A, 3B
Quantity	2 (100% capacity each)
Type	Central station, draw-through
Supply fan capacity, each, cfm	1,500
Total pressure, each, in W.G.	2.36
Supply fan motor, each, hp	2
Cooling medium	Chilled water
Cooling capacity, each, mbh	36.5

Record Storage Vault Air Conditioning Unit

Equipment Mark No.	2HVC-ACU5/2HVC-CND1
Type	Split system
Supply fan capacity, cfm	1,800
Total pressure, in W.G.(1)	0.84
Supply fan motor, hp	1
Cooling medium	Refrigerant R-22
Cooling capacity, mbh	48.0
Heating medium	Electric
Heating capacity, kW	14.7
Humidifier type	Infrared
Humidifier capacity, water, lb/hr	11.0

Unit Coolers

1. Standby Switchgear Rooms - Division I and II

Equipment Mark No.	
Division I	2HVC*UC101A, 108A
Division II	2HVC*UC101B, 108B
Quantity	
Division I	2
Division II	2

Units 2HVC*UC101A and 101B include the following components:

TABLE 9.4-2 (Historical)
(Cont'd.)

a. Fan:

Type	Vaneaxial
Capacity, each, cfm	10,000
Total pressure, each, in W.G.	2.5
Motor, each, hp	7.5

b. Cooling coil:

Type	Finned, tubular
Cooling medium	Service water
Cooling capacity, each, mbh	185

c. Filter:

Type	Disposable
Media	Fiberglass
Efficiency, NBS dustspot, %	50

Units 2HVC*UC108A and 108B include the following components:

a. Fan:

Type	Vaneaxial
Capacity, each, cfm	14,000
Total pressure, each, in W.G.	2.8
Motor, each, hp	10

b. Cooling Coil:

Type	Finned, tubular
Cooling medium	Service water
Cooling capacity, each, mbh	265.0

c. Filter:

Type	Disposable
Media	Fiberglass
Efficiency, NBS dustspot, %	50

2. Standby Switchgear Room - Division III

Equipment Mark No. 2HVC*UC102

The unit cooler includes the following components:

TABLE 9.4-2 (Historical)
(Cont'd.)

a. Fan:	
Type	Vaneaxial
Capacity, cfm	5,000
Total pressure, in W.G.	2.6
Motor, hp	5
b. Cooling Coil:	
Type	Finned, tubular
Cooling medium	Service water
Cooling capacity, mbh	95.0*
c. Filter:	
Type	Disposable
Media	Fiberglass
Efficiency, NBS dustspot, %	50
3. Chiller Equipment Rooms	
Equipment Mark No.	2HVC*UC103A, 103B
Quantity	2 (one/room)
Each unit cooler includes the following components:	
a. Fan:	
Type	Propeller
Capacity, cfm	3,000
Total pressure, in W.G.	0.75
Motor, hp	1
b. Cooling Coil:	
Type	Finned, tubular
Cooling medium	Service water
Cooling capacity, mbh	55
c. Filter:	
Type	Disposable
Media	Fiberglass
Efficiency, NBS, dustspot, %	18
4. Electrical Tunnel - Division I	
Equipment Mark No.	2HVC*UC104

* The specified value represents the capacity of the cooler at original plant design conditions. Changes in capacity due to variations in plant conditions are addressed in the associated system design calculations.

TABLE 9.4-2 (Historical)
(Cont'd.)

The unit cooler includes the following components:

a. Fan:

Type	Vaneaxial
Capacity, cfm	10,000
Total pressure, in W.G.	4.5
Motor, hp	15

b. Cooling Coil:

Type	Finned, tubular
Cooling medium	Service water
Cooling capacity, mbh	185

c. Filter:

Type	Disposable
Media	Fiberglass
Efficiency, NBS dustspot, %	55

5. Electrical Tunnel - Division II

Equipment Mark No.	2HVC*UC105

The unit cooler includes the following components:

a. Fan:

Type	Vaneaxial
Capacity, cfm	3,600
Total pressure, in W.G.	3.9
Motor, hp	5

b. Cooling Coil:

Type	Finned, tubular
Cooling medium	Service water
Cooling capacity, mbh	65

c. Filter:

Type	Disposable
Media	Fiberglass
Efficiency, NBS dustspot, %	55

6. Cable Area - Divisions I and II

Equipment Mark No.	2HVC*UC106, 107
Quantity	2 (one/area)

Each unit cooler includes the following components:

TABLE 9.4-2 (Historical)
(Cont'd.)

a. Fan:	
Type	Vaneaxial
Capacity, cfm	11,100
Total pressure, in W.G.	5.0/4.50
Motor, hp	15
b. Cooling Coil:	
Type	Finned, tubular
Cooling medium	Service water
Cooling capacity, mbh	205.0
c. Filter:	
Type	Disposable
Media	Fiberglass
Efficiency, NBS dustspot, %	55

Control Room Emergency Filtration System

Equipment Mark No.	2HVC*FLT2A, 2B
Quantity	2 (100% capacity each)

The system includes the following components:

1. Booster Fans:	
Equipment Mark No.	2HVC*FN2A, 2B
Quantity	2 (100% capacity each)
Type	Centrifugal
Capacity, each, cfm	2,250
Total pressure, each, in W.G.(2)	12.0
Motor, each, hp	10
2. Heating Coil:	
Equipment Mark No.	2HVC*CH7A, 7B
Quantity	2 (one/filter train)
Type	Electric
Capacity, each, kW	10
3. Transformer:	
Equipment Mark No.	2HVC*XD1A, 1B
Quantity	2
Rating, each, kVA	15
High voltage/low voltage, each, V	550/480

TABLE 9.4-2 (Historical)
(Cont'd.)

4.	Prefilter:	
	Quantity	2 (one/filter train)
	Quantity	Disposable
	Media	Fiberglass
	Efficiency, NBS dustspot, %	80-85
5.	Charcoal Adsorber:	
	Quantity	2 (one/filter train)
	Type	Gasketless
	Media	Charcoal (4.0 in min thickness)
	Retention, %	99
6.	High-Efficiency HEPA Filter:	
	Quantity	4 (two/filter train)
	Type	HEPA
	Media	Fiberglass
	Efficiency, NBS dustspot, %	99.97

<u>Smoke Removal Makeup Air Unit</u>

Equipment Mark No.	2HVC-HVU1

The unit includes the following components:

1.	Fan:	
	Type	Centrifugal
	Capacity, cfm	16,500
	Total pressure, in W.G.	2.2
	Motor, hp	15
2.	Heating Coil:	
	Type	Electric
	Capacity, kW	265
3.	Filter:	
	Type	Disposable
	Media	Fiberglass
	Efficiency, NBS dustspot, %	50

<u>Elevation 261' Supply Air Units</u>

Quantity	2 (100% capacity each)

The units include the following components:

TABLE 9.4-2 (Historical)
(Cont'd.)

1. Fans:	
Equipment Mark No.	2HVC*FN11A, 11B
Quantity	2 (one/unit)
Type	Vaneaxial
Capacity, each, cfm	4,350
Total pressure, each, in W.G.	3.20
Motor, each, hp	7.5
2. Heating Coils:	
Equipment Mark No.	2HVC-CH6A, 6B
Quantity	2 (one/unit)
Type	Electric
Capacity, each, kW	140
3. Filters:	
Equipment Mark No.	2HVC*FLT3A, 3B
Quantity	2 (one/unit)
Type	Disposable
Media	Fiberglass
Efficiency, NBS dustspot, %	50
<u>Divisionalized Battery Room Exhaust Fans</u>	
Equipment Mark No.	2HVC*FN4A, 4B
Quantity	2 (100% capacity each)
Type	Vaneaxial
Capacity, each, cfm	1,275
Total pressure, each, in W.G.	1.31
Motor, each, hp	3
<u>Nondivisionalized Battery Room Exhaust Fans</u>	
Equipment Mark No.	2HVC-FN21A, 21B
Quantity	2 (100% capacity each)
Type	Vaneaxial
Capacity, each, cfm	1,450
Total pressure, each, in W.G.	1.67
Motor, each, hp	3
<u>Control Room and Relay Room Elevation Smoke Removal Fan</u>	
Equipment Mark No.	2HVC-FN3
Type	Centrifugal
Capacity, cfm	15,500
Total pressure, in W.G.(2)	2.00
Motor, hp	20

TABLE 9.4-2 (Historical)
(Cont'd.)

Elevation 261' Smoke Removal Fan	
Equipment Mark No.	2HVC-FN6
Type	Centrifugal
Capacity, cfm	2,700
Total pressure, in W.G.(2)	1.28
Motor, hp	1
Divisions I and II Cable Area Smoke Removal Fans	
Equipment Mark No.	2HVC-FN12, 14
Quantity	2 (one/division)
Type	Centrifugal
Capacity, each, cfm	10,000
Total pressure, each, in W.G.(2)	7.00
Motor, each, hp	20
Toilet Exhaust Fan	
Equipment Mark No.	2HVC-FN1
Type	Vaneaxial
Capacity, cfm	400
Total pressure, in W.G.(2)	0.77
Motor, hp	1/12
Lunch Room Kitchen Unit Exhaust Fan	
Equipment Mark No.	2HVC-FN7
Type	Vaneaxial
Capacity, cfm	150
Total pressure, in W.G.(2)	0.57
Motor, hp	1/12
Chiller Room Exhaust Fan	
Equipment Mark No.	2HVC-FN8
Type	Centrifugal
Capacity, cfm	2,700
Total pressure, in W.G.(2)	1.00
Motor, hp	1

TABLE 9.4-2 (Historical)
(Cont'd.)

Division I Electrical Tunnel Smoke Removal Fan	
Equipment Mark No.	2HVC-FN9
Type	Centrifugal
Capacity, cfm	10,000
Total pressure, in W.G.(2)	4.20
Motor, hp	15
Division II Electrical Tunnel Smoke Removal Fan	
Equipment Mark No.	2HVC-FN10
Type	Centrifugal
Capacity, cfm	3,600
Total pressure, in W.G.(2)	3.80
Motor, hp	5
Normal Switchgear Building Supply Air Unit	
The unit includes the following components:	
1. Fans:	
Equipment Mark No.	2HVC-FN13A, 13B, 13C
Quantity	3 (50% capacity each)
Type	Vaneaxial
Capacity, each, cfm	20,000
Total pressure, each, in W.G.	4.90
Motor, each, hp	30
2. Filter:	
Equipment Mark No.	2HVC-FLT4
Type	Disposable
Media	Fiberglass
Efficiency, NBS dustspot, %	50
3. Cooling Coil:	
Equipment Mark No.	2HVC-CLC1
Type	Finned, tubular
Cooling medium	Chilled water
Cooling capacity, mbh	1,946

TABLE 9.4-2 (Historical)
(Cont'd.)

<u>Normal Switchgear Building Return Air/Exhaust Fans</u>	
Equipment Mark No.	2HVC-FN19A, 19B, 19C
Quantity	3 (50% capacity each)
Type	Centrifugal
Capacity, each, cfm	15,775
Total pressure, each, in W.G.(2)	2.00
Motor, each, hp	10
<u>Normal Switchgear Building Ventilation Equipment Penthouse Supply Fans</u>	
Equipment Mark No.	2HVC-FN20A, 20B, 20C
Quantity	3 (50% capacity each)
Type	Propeller, roof mounted
Capacity, each, cfm	4,250
Total pressure, each, in W.G.(2)	0.12
Motor, each, hp	3/4
<u>Normal Switchgear Building Battery Room Exhaust Fans</u>	
Equipment Mark No.	2HVC-FN15A, 15B
Quantity	2 (100% capacity each)
Type	Vaneaxial
Capacity, each, cfm	3,450
Total pressure, each, in W.G.	1.79
Motor, each, hp	2
<u>Normal Switchgear Building MG Set Penthouse Supply Air Units</u>	
Quantity	2 (100% capacity each)
The units include the following components:	
1. Fans:	
Equipment Mark No.	2HVC-FN16A, 16B
Quantity	2 (one/unit)
Type	Propeller
Capacity, each, cfm	10,750
Total pressure, each, in W.G.(2)	0.73
Motor, each, hp	5

TABLE 9.4-2 (Historical)
(Cont'd.)

2. Filters:	
Equipment Mark No.	2HVC-FLT5A, 5B
Quantity	2 (one/unit)
Type	Disposable
Media	Fiberglass
Efficiency, NBS dustspot, %	50
<u>Unit Heaters</u>	
Equipment Mark No.	2HVC-UHE103, 104, 109, 114, 118, 119, 120
Quantity	7
Type	Electric
Capacity, each, kW	12
Equipment Mark No.	2HVC-UHE101, 105, 107, 110, 111, 112, 113, 115, 116, 117
Quantity	10
Type	Electric
Capacity, each, kW	20

(1) Total static pressure.
(2) Fan external static pressure.

TABLE 9.4-3 (Historical)

DESIGN DATA OF PRINCIPAL EQUIPMENT -
REACTOR BUILDING HVAC SYSTEM

Drywell Cooling

1. Unit Coolers - Elevation 240'

Equipment Mark No.	2DRS-UC1A,1B,1C,1D
Quantity	4

Each unit cooler includes the following components:

a. Fan	
Type	Vaneaxial
Capacity, cfm	16,750
Total pressure, in W.G.	UC1A : 4.81
	UC1B : 3.27
	UC1C : 3.32
	UC1D : 3.93
Motor, hp	20
b. Cooling Coil	
Type	Finned, tubular
Cooling medium	Service water
Cooling capacity, mbh	889.0

2. Unit Coolers - Elevation 278'-6"

Equipment Mark No.	2DRS-UC2A,2B,2C,2D
Quantity	4

Each unit cooler includes the following components:

a. Fan	
Type	Vaneaxial
Capacity, cfm	11,000
Total pressure, in W.G.	2.43
Motor, hp	10
b. Cooling Coil	
Type	Finned, tubular
Cooling medium	Service water
Cooling capacity, mbh	583.0

3. Unit Coolers - Elevation 288'-3"

Equipment Mark No.	2DRS-UC3A,3B
Quantity	2 (100% capacity each)

TABLE 9.4-3 (Historical)
(Cont'd.)

Each unit cooler includes the following components:

a. Fan	
Type	Vaneaxial
Capacity, cfm	8,500
Total pressure, in W.G.	4.5
Motor, hp	15
b. Cooling Coil	
Type	Finned, tubular
Cooling medium	Service water
Cooling capacity, mbh	451.0

Primary Containment Purge

1. Supply Air Fan

Equipment Mark No.	2CPS-FNI
Type	Centrifugal
Capacity, cfm	3,500
Total pressure, in W.G.(1)	7.98
Motor, hp	10

All other reactor building areas

1. Supply Ventilation Air Handling Unit

The unit includes the following components:

a. Prefilter	
Quantity	6
Equipment Mark No.	2HVR-FLT4,5,6,7,8,9
Type	Disposable
Media	Fiberglass
Efficiency, NBS dustspot, %	50
b. Filter	
Quantity	6
Equipment Mark No.	2HVR-FLT10,11,12,13,14, 15
Type	Disposable
Media	Fiberglass
Efficiency, NBS dustspot, %	65
c. Heating Coil	
Equipment Mark No.	2HVR-CH1
Type	Finned, tubular
Heating medium	Glycol
Heating capacity, mbh	12,968

TABLE 9.4-3 (Historical)
(Cont'd.)

d.	Cooling Coil	
	Equipment Mark No.	2HVR-CLC2
	Type	Finned, tubular
	Cooling medium	Service water
	Cooling capacity, mbh	1,154.0
e.	Fan	
	Quantity	3 (50% capacity each)
	Equipment Mark No.	2HVR-FN1A,1B,1C
	Type	Vaneaxial
	Capacity, each, cfm	70,000
	Total pressure, each, in W.G.	9.60
	Motor, each, hp	150
2.	Refueling Floor Exhaust Fans	
	Quantity	2 (100% capacity each)
	Equipment Mark No.	2HVR-FN5A,5B
	Type	Vaneaxial
	Capacity, each, cfm	70,000
	Total pressure, each, in W.G.	6.30
	Motor, each, hp	100
3.	Below Refueling Floor Exhaust Fans	
	Quantity	2 (100% capacity each)
	Equipment Mark No.	2HVR-FN2A,2B
	Type	Vaneaxial
	Capacity, each, cfm	70,000
	Total pressure, each, in W.G.	8.20
	Motor, each, hp	125
4.	Reactor Head Evacuation Filter Unit	
	Equipment Mark No.	2HVR-FLT3
	The unit includes the following components:	
a.	Heating Coil	
	Type	Electric
	Capacity, kW	7
b.	Prefilter	
	Type	Disposable
	Media	Fiberglass
	Efficiency, NBS dustspot, %	50

TABLE 9.4-3 (Historical)
(Cont'd.)

c. Charcoal Adsorber	
Type	Gasketless
Media	Charcoal
Retention, %	99
d. High-Efficiency Final Filter	
Type	HEPA
Media	Fiberglass
Efficiency, NBS dustspot, %	99.97
5. Reactor Head Evacuation Fan	
Equipment Mark No.	2HVR-FN6
Type	Centrifugal
Capacity, cfm	1,000
Total pressure, in W.G.(1)	13.40
Motor, hp	5
6. Emergency Recirculating Unit Coolers	
Equipment Mark No.	2HVR*UC413A, 413B
Quantity	2 (100% capacity each)
Each unit cooler includes the following components:	
a. Fan	
Type	Vaneaxial
Capacity, cfm	70,000
Total pressure, in W.G.	9.00
Motor, hp	150
b. Cooling Coil	
Type	Finned, tubular
Cooling medium	Service water
Cooling capacity, mbh	1,330.0
7. RHS Pump Rooms A, B, and C Unit Coolers	
Equipment Mark No.	2HVR*UC401A - 401F
Quantity	6 (100% capacity each, 2 per room)
Each unit cooler includes the following components:	
a. Fan	
Type	Propeller
Capacity, cfm	10,000
Total pressure, in W.G.	0.81
Motor, hp	2

TABLE 9.4-3 (Historical)
(Cont'd.)

b. Cooling Coil	
Type	Finned, tubular
Cooling medium	Service water
Cooling capacity, mbh	185.0
8. LPCS Pump Room Unit Coolers	
Equipment Mark No.	2HVR*UC402A, 402B
Quantity	2 (100% capacity each)
Each unit cooler includes the following components:	
a. Fan	
Type	Propeller
Quantity (per unit cooler)	2
Capacity, each, cfm	7,800
Total pressure, each, in W.G.	1.87
Motor, each, hp	5
b. Cooling Coil	
Type	Finned, tubular
Cooling medium	Service water
Cooling capacity, mbh	285
9. HPCS Pump Room Unit Coolers	
Equipment Mark No.	2HVR*UC403A, 403B
Quantity	2 (100% capacity each)
Each unit cooler includes the following components:	
a. Fan	
Type	Propeller
Quantity (per unit cooler)	2
Capacity, each, cfm	13,600
Total pressure, each, in W.G.	1.92
Motor, each, hp	7.5
b. Cooling Coil	
Type (cooling medium)	Finned, tubular
Cooling capacity, mbh	500.0

TABLE 9.4-3 (Historical)
(Cont'd.)

10. General Areas Unit Coolers - Elevations 175'-0" & 261'-0"

Equipment Mark No.	2HVR*UC404A, 404B, 404C, 404D 2HVR*UC411A, 411B, 411C 2HVR*UC414A, 414B
Quantity	9

Each unit cooler includes the following components:

a. Fan	
Type	Propeller
Capacity, cfm	7,400
Total pressure, in W.G.	1.55
Motor, hp	3
b. Cooling Coil	
Type	Finned, tubular
Cooling medium	Service water
Cooling capacity, mbh	135.0

11. RHS Heat Exchanger Room A Unit Cooler

Mark No.	2HVR*UC405

The unit cooler includes the following components:

a. Fan	
Type	Vaneaxial
Capacity, cfm	3,600
Total pressure, in W.G.	1.53
Motor, hp	3
b. Cooling Coil	
Type	Finned, tubular
Cooling medium	Service water
Cooling capacity, mbh	65.0

12. RHS Heat Exchanger Room B Unit Cooler

Equipment Mark No.	2HVR*UC406

The unit cooler includes the following components:

a. Fan	
Type	Vaneaxial
Capacity, cfm	3,600
Total pressure, in W.G.	1.23
Motor, hp	2

TABLE 9.4-3 (Historical)
(Cont'd.)

b. Cooling Coil	
Type	Finned, tubular
Cooling medium	Service water
Cooling capacity, mbh	65.0

13. General Areas Unit Coolers - Elevations 215'-0" & 240'-0"

Equipment Mark No.	2HVR*UC407A - 407E 2HVR*UC410A, 410B, 410C
Quantity	8

Each unit cooler includes the following components:

a. Fan	
Type	Propeller
Capacity, cfm	4,400
Total pressure, in W.G.	0.77
Motor, hp	1.5
b. Cooling Coil	
Type	Finned, tubular
Cooling medium	Service water
Cooling capacity, mbh	80.0

14. North Electrical MCC Area Unit Coolers

Equipment Mark No.	2HVR*UC408A, 408B
Quantity	2 (100% capacity each)

Each unit cooler includes the following components:

a. Fan	
Type	Vaneaxial
Capacity, cfm	10,000
Total pressure, in W.G.	1.57
Motor, hp	5
b. Cooling Coil	
Type	Finned, tubular
Cooling medium	Service water
Cooling capacity, mbh	185.0

15. South Electrical MCC Area Unit Coolers

Equipment Mark No.	2HVR*UC409A, 409B
Quantity	2 (100% capacity each)

TABLE 9.4-3 (Historical)
(Cont'd.)

Each unit cooler includes the following components:

a.	Fan	
	Type	Vaneaxial
	Capacity, cfm	10,000
	Total pressure, in W.G.	1.27
	Motor, hp	5
b.	Cooling Coil	
	Type	Finned, tubular
	Cooling medium	Service water
	Cooling capacity, mbh	185.0

16. RCIC Pump Room Unit Coolers

Equipment Mark No.	2HVR*UC412A, 412B
Quantity	2 (100% capacity each)

Each unit cooler includes the following components:

a.	Fan	
	Type	Propeller
	Capacity, cfm	7,400
	Total pressure, in W.G.	1.55
	Motor, hp	3
b.	Cooling Coil	
	Type	Finned, tubular
	Cooling medium	Service water
	Cooling capacity, mbh	135.0

17. SGTS Filter Rooms A and B Unit Coolers

Equipment Mark No.	2HVR*UC415A, 415B
Quantity	2 (one per room)

Each unit cooler includes the following components:

a.	Fan	
	Type	Propeller
	Capacity, cfm	5,000
	Total pressure, in W.G.	0.80
	Motor, hp	5
b.	Cooling Coil	
	Type	Finned, tubular
	Cooling medium	Service water
	Cooling capacity, mbh	100.0

TABLE 9.4-3 (Historical)
(Cont'd.)

18. SGTS Building Exhaust Fans	
Equipment Mark No.	2HVR-FN7, FN8
Quantity	2
Type	Propeller, roof mounted
Capacity, each, cfm	3,000
Total pressure, each, in W.G.(1)	0.10
Motor, each, hp	1/3
19. North Duct Air Heater	
Equipment Mark No.	2HVR-CH2
Type	Electric
Capacity, kW	135
20. South Duct Air Heater	
Equipment Mark No.	2HVR-CH3
Type	Electric
Capacity, kW	90
21. Unit Heaters	
Equipment Mark No.	2HVR-UHE401,402,403, 404,409,410,411,412, 413,414,415,416,417, 418,419,420,459,465
Quantity	18
Capacity each, kW	7.5
Equipment Mark No.	2HVR-UHE405,406,407, 408,433,434,435,436, 453,454,455,456,457, 458,460,461,462,463, 464
Quantity	19
Capacity, each, kW	12.5
Equipment Mark No.	2HVR-UHE421,422,423, 424,425,427,437,438, 439,440,441,442
Quantity	12
Capacity, each, kW	20.0
Equipment Mark No.	2HVR-UHE426,428,429, 430,431,432,451,452
Quantity	8

TABLE 9.4-3 (Historical)
(Cont'd.)

Capacity, each, kW	30.0
Equipment Mark No.	2HVR-UHE443,444,445, 446,447,448,449,450
Quantity	8
Capacity, each, kW	40.0

(1) Fan external static pressure.

TABLE 9.4-4 (Historical)

DESIGN DATA OF PRINCIPAL EQUIPMENT -
RADWASTE BUILDING HVAC SYSTEM

Supply Air System

The system includes the following components:

1.	Prefilter	
	Equipment Mark No.	2HVW-FLT1
	Type	Disposable
	Media	Fiberglass
	Efficiency, NBS dustspot, %	35
2.	Heating Coil	
	Equipment Mark No.	2HVW-CH1
	Type	Finned, tubular
	Heating medium	Glycol
	Heating capacity, mbh	4,410.0
3.	Filter	
	Equipment Mark No.	2HVW-FLT2
	Type	Disposable
	Media	Fiberglass
	Efficiency, NBS dustspot, %	65
4.	Cooling Coil	
	Equipment Mark No.	2HVW-CLC1
	Type	Finned, tubular
	Cooling medium	Chilled water
	Cooling capacity, mbh	2,076.0
5.	Fans	
	Equipment Mark No.	2HVW-FN1A, 1B
	Quantity	2 (100% capacity each)
	Type	Vaneaxial
	Capacity, each, cfm	47,800
	Total pressure, each, in W.G.	8.4
	Motor, each, hp	100

General Area Exhaust System

The system includes the following components:

1.	Prefilters	
	Equipment Mark No.	2HVW-FLT5A, 5B
	Quantity	2 (100% capacity each)
	Type	Disposable
	Media	Fiberglass
	Efficiency, NBS dustspot, %	35

TABLE 9.4-4 (Historical)
(Cont'd.)

2. High-Efficiency Final Filters	
Equipment Mark No.	2HVW-FLT6A, 6B
Quantity	2 (100% capacity each)
Type	HEPA
Media	Fiberglass
Efficiency, NBS dustspot, %	99.97
3. Fans	
Equipment Mark No.	2HVW-FN2A, 2B
Quantity	2 (100% capacity each)
Type	Vaneaxial
Capacity, each, cfm	47,800
Total pressure, each, in W.G.	10.7
Motor, each, hp	150

Equipment Exhaust System

The system includes the following components:

1. Prefilters	
Equipment Mark No.	2HVW-FLT3A, 3B
Quantity	2 (100% capacity each)
Type	Disposable
Media	Fiberglass
Efficiency, NBS dustspot, %	35
2. High-Efficiency Final Filters	
Equipment Mark No.	2HVW-FLT4A, 4B
Quantity	2 (100% capacity each)
Type	HEPA
Media	Fiberglass
Efficiency, NBS dustspot, %	99.97
3. Fans	
Equipment Mark No.	2HVW-FN3A, 3B
Quantity	2 (100% capacity each)
Type	Centrifugal
Capacity, each, cfm	4,900
Total pressure, each, in W.G.(1)	10.30
Motor, each, hp	20

Smoke Removal Fan

Equipment Mark No.	2HVW-FN5
Type	Centrifugal, in-line
Capacity, cfm	4,400
Total pressure, in W.G.(1)	1.00
Motor, hp	2

TABLE 9.4-4 (Historical)
(Cont'd.)

Liner Filling Hood Exhaust System

The system includes the following components:

The unit includes the following components:

1. Prefilter	
Equipment Mark No.	2HVW-FLT7
Type	Disposable
Media	Fiberglass
Efficiency, NBS dustspot, %	78
2. High-Efficiency Filters	
Equipment Mark No.	2HVW-FLTB
Quantity	2
Type	HEPA
Media	Fiberglass
Efficiency, NBS dustspot, %	99.97
3. Fan	
Equipment Mark No.	2HVW-FN4
Type	Centrifugal
Capacity, cfm	800
Total pressure, in W.G.(1)	11.00
Motor, hp	5

Radwaste Decon General Areas Air Conditioning Units

Equipment Mark No.	2HVW-ACU1A, 1B
Quantity	2 (100% capacity each)
Type	Central station, drawthrough

Each unit includes the following components:

1. Filter	
Type	Disposable
Media	Fiberglass
Efficiency, NBS dustspot, %	35
2. Heating Coil	
Type	Electric
Heating capacity, kW	340.0
3. Cooling Coil	
Type	Finned, tubular
Cooling medium	Chilled water
Cooling capacity, mbh	1,420

TABLE 9.4-4 (Historical)
(Cont'd.)

4. Supply Air Fan	
Type	Centrifugal
Capacity, cfm	27,030
Total pressure, in W.G.	4.54
Motor, hp	30

Radwaste Decon Clean Areas Return Air/Exhaust Fans

Equipment Mark No.	2HVW-FN11A, 11B
Quantity	2 (100% capacity each)
Type	Vaneaxial
Capacity, each, cfm	8,400
Total pressure, each, in W.G.	2.00
Motor, each, hp	5

Radwaste Control Room Air Conditioning Units

Each air conditioning unit is a split-type unit consisting of an air handling unit and two roof-mounted air-cooled condensing units.

1. Air Handling Units	
Equipment Mark No.	2HVW-ACU2A, 2B
Quantity	2 (100% capacity each)
Type	Central station, drawthrough

Each unit includes the following components:

a. Filter	
Type	Disposable
Media	Fiberglass
Efficiency, NBS dustspot, %	35
b. Heating Coil	
Type	Electric
Heating capacity, kW	36.0
c. Cooling Coil	
Type	Finned, tubular
Cooling medium	Refrigerant R-22
Cooling capacity, mbh	349.165
d. Supply Air Fan	
Type	Centrifugal
Capacity, cfm	11,400
Total pressure, in W.G.	2.9
Motor, hp	10

TABLE 9.4-4 (Historical)
(Cont'd.)

2. Condensing Units (Roof Mounted)	
Equipment Mark No.	2HVW-CND1A,1B,2A,2B
Quantity	4 (50% capacity each)
Type	Condenser
Each unit includes the following components:	
a. Fan	
Type	Propeller
Quantity	2
Capacity, total, cfm	8,800
Motor, each, hp	0.5
b. Compressor	
Quantity	1
Power input, kW	17
Radwaste Control Room Return Air/Exhaust Fans	
Equipment Mark No.	2HVW-FN12A, 12B
Quantity	2 (100% capacity each)
Type	Vaneaxial
Capacity, each, cfm	10,700
Total pressure, each, in W.G.	0.82
Motor, each, hp	3.0
Radwaste Decon Dirty Areas Return Air/Exhaust System	
The system includes the following components:	
1. Return Air/Exhaust Fans	
Equipment Mark No.	2HVW-FN10A, 10B
Quantity	2 (100% capacity each)
Type	Vaneaxial
Capacity, each, cfm	18,180
Total pressure, each, in W.G.	6.50
Motor, each, hp	30
2. High-Efficiency Final Filters	2HVW-FLT100A, 100B
Equipment Mark No.	2 (100% capacity each)
Quantity	HEPA
Media	Fiberglass
Efficiency, NBS dustspot, %	99.97
Chemistry Laboratory Air Conditioning Unit	
Equipment Mark No.	2HVW-ACU3
Quantity	1 (100% capacity)
Type	Packaged A/C unit

TABLE 9.4-4 (Historical)
(Cont'd.)

The unit includes the following components:

1. Compressor	
Type	Semi-Hermatic
Refrigerant	R-22
V/O/Hz	575/3/60
2. Fan	
Type	Centrifugal
RPM	1750
Drive	Belt driven
3. Air-Cooled Condenser	
Equipment Mark No.	2HVW-CND3
Summer Ent. DB Temp. °F	100
Winter Ent. DB Temp. °F	-10
4. Filter	
Type	Disposable
Efficiency, NBS dustspot, %	40
5. Humidifier	
Type	Infrared
Capacity, lb/hr	11
kW	4.8
6. Reheat Coil	
Type	Electric
Capacity, kW	9

Chemistry Laboratory Hood Exhaust Fans

Equipment Mark No.	2HVN-FN14 & 15
Quantity	2 (100% capacity each)
Type	Vaneaxial
Capacity, cfm	922
Total pressure, in W.G.	.65
Motor, each, hp	1/4

Post-accident Sampling Equipment Exhaust System

1. Exhaust Fan	
Equipment Mark No.	2HVW-FN13
Quantity	1
Type	Regenerative blower
Capacity, cfm	40
Static pressure, in. W.G.(1)	4.5
Motor, hp	0.34

TABLE 9.4-4 (Historical)
(Cont'd.)

2.	High-Efficiency/Charcoal Combination Filter	
	Equipment Mark No.	2HVW-FLT101
	Quantity	1
	Type	HEPA/charcoal
	Media	Fiberglass/charcoal
	Efficiency of the combination filter, %	99
<u>Unit Heaters</u>		
1.	Equipment Mark No.	2HVW-UHE301, 302, 303, 304, 305, 306
	Quantity	6
	Type	Electric
	Capacity, each, kW	40
2.	Equipment Mark No.	2HVW-UHE309, 310, 311
	Quantity	3
	Type	Electric
	Capacity, each, kW	30
3.	Equipment Mark No.	2HVW-UHE312
	Type	Electric
	Capacity, kW	12.5
4.	Equipment Mark No.	2HVW-UHE307, 308
	Quantity	2
	Type	Electric
	Capacity, each, kW	7.5
<u>Duct Air Heaters</u>		
1.	Equipment Mark No.	2HVW-CH3
	Type	Electric
	Capacity, kW	40
2.	Equipment Mark No.	2HVW-CH6
	Type	Electric
	Capacity, kW	12
3.	Equipment Mark No.	2HVW-CH7
	Type	Electric
	Capacity, kW	102
4.	Equipment Mark No.	2HVW-CH12
	Type	Electric
	Capacity, kW	45

TABLE 9.4-4 (Historical)
(Cont'd.)

5.	Equipment Mark No.	2HVW-CH13
	Type	Electric
	Capacity, kW	30

(1) Fan external static pressure

TABLE 9.4-5 (Historical)

DATA OF PRINCIPAL EQUIPMENT
TURBINE BUILDING HVAC SYSTEM

Supply Air System

The system includes the following components:

1.	Prefilter	
	Equipment Mark No.	2HVT-FLT3, 4
	Quantity	2
	Type	Disposable
	Media	Fiberglass
	Efficiency, NBS dustspot, %	50
2.	Filter	
	Equipment Mark No.	2HVT-FLT5, 6
	Quantity	2
	Type	Disposable
	Media	Fiberglass
	Efficiency, NBS dustspot, %	65
3.	Heating Coil	
	Equipment Mark No.	2HVT-CH1
	Type	Finned, tubular
	Heating medium	Glycol
	Heating capacity, mbh	7,412.0
4.	Cooling Coil	
	Equipment Mark No.	2HVT-CLC1
	Type	Finned, tubular
	Cooling medium	Chilled water
	Cooling capacity, mbh	4,464.0
5.	Fans	
	Equipment Mark No.	2HVT-FN1A, 1B, 1C
	Quantity	3 (50% capacity each)
	Type	Vaneaxial
	Capacity, each, cfm	40,000
	Total pressure, each, in W.G.	7.26
	Motor, each, hp	75

Exhaust Air System

The system includes the following components:

1.	Fans - Turbine Building Exhaust	
	Equipment Mark No.	2HVT-FN2A, 2B, 2C
	Quantity	3 (50% capacity each)
	Type	Vaneaxial

TABLE 9.4-5 (Historical)
(Cont'd.)

Capacity, each, cfm	40,000
Total pressure, each, in W.G.	10.24
Motor, each, hp	125
2. Fans - Main Stack Exhaust	
Equipment Mark No.	2HVT-FN10A, 10B
Quantity	2 (100% capacity each)
Type	In-line centrifugal
Capacity, each, cfm	1,400
Total pressure, each, in W.G.(2)	3.00
Motor, each, hp	1.5
3. Unit Heaters - Main Stack	
Equipment Mark No.	2HVT-UHE250, 252
Quantity	2
Type	Electric
Capacity, each, kW	12.5
4. Unit Heater - Main Stack	
Equipment Mark No.	2HVT-UHE251
Type	Electric
Capacity, kW	7.5
<u>Ventilation Fans - Elevator Machine Rooms</u>	
1. Fan - Elevator Machine Room 1	
Equipment Mark No.	2HVT-FN5
Type	Propeller, wall mounted
Capacity, cfm	1,500
Total pressure, in W.G.(2)	0.34
Motor, hp	1/2
2. Fan - Elevator Machine Room 2	
Equipment Mark No.	2HVT-FN6
Type	Propeller, wall mounted
Capacity, cfm	1,500
Total pressure, in W.G.(2)	0.30
Motor, hp	1/3
3. Fan - Elevator Machine Room 3	
Equipment Mark No.	2HVT-FN7
Type	Propeller, roof mounted
Capacity, cfm	1,500
Total pressure, in W.G.(2)	0.17
Motor, hp	1/4
4. Fan - Load Center Room	
Equipment Mark No.	2HVT-FN8
Type	Propeller

TABLE 9.4-5 (Historical)
(Cont'd.)

Total pressure, in W.G.[2]	0.5
Motor, hp	3.0
5. Relief Vents	
Equipment Mark No.	2HVT-RFV1, 2
Quantity	2
Capacity, cfm, each	1,500
6. Air Transfer Fan - Main Steam Tunnel	
Equipment Mark No.	2HVT-FN11
Type	Centrifugal
Capacity, cfm	10,000
Total pressure, in W.G.[1]	3.75
Motor, hp	10.0
<u>Charcoal Decay-Bed Room Air Conditioning Unit</u>	
Equipment Mark No.	2HVT-ACUS1
Type	Package, vertical cabinet
The unit includes the following components:	
1. Supply Fan	
Type	Centrifugal
Capacity, cfm	6,200
Total pressure, in W.G.[1]	1.45
Motor, hp	3
2. Filter	
Type	Disposable
Media	Fiberglass
Efficiency, NBS dustspot, %	95
3. Cooling Coil	
Type	Finned, tubular
Cooling medium	Refrigerant R-22
Cooling capacity, mbh	171.5
<u>Sample Room Air Conditioning Unit</u>	
Equipment Mark No.	2HVT-ACUS2
Type	Package, vertical cabinet
The unit includes the following components:	

TABLE 9.4-5 (Historical)
(Cont'd.)

1. Supply Fan	
Type	Centrifugal
Capacity, cfm	7,000
Total pressure, in W.G.(1)	0.97
Motor, hp	7.5
2. Filter	
Type	Disposable
Media	Fiberglass
Efficiency, NBS dustspot, %	95
3. Cooling Coil	
Type	Finned, tubular
Cooling medium	Refrigerant R-22
Cooling capacity, mbh	269.0

Ventilation Equipment Area Air Conditioning Unit

This unit is a split type, air conditioning unit consisting of an air handling unit and an air-cooled condensing unit.

1. Air Handling Unit	
Equipment Mark No.	2HVT-ACUS4
The unit includes the following components:	
a. Supply Fan	
Type	Centrifugal
Quantity	1
Capacity, each, cfm	9,000
Total pressure, each, in W.G.(2)	0.5
Motor, each, hp	7.5
b. Filter	
Type	Disposable
Media	Fiberglass
Efficiency, NBS dustspot, %	40
c. Cooling Coil	
Type	Finned tubular
Cooling medium	Refrigerant R-22
Cooling capacity, mbh	637.8
2. Condensing Unit	
Equipment Mark No.	2HVT-CND4
Type	Condenser

TABLE 9.4-5 (Historical)
(Cont'd.)

The unit includes the following components:

a. Fan

Type	Propeller
Quantity	6
Capacity, total, cfm	39,000
Motor, each, hp	0.5

b. Compressor

Quantity	2
Power input, total, kW	61.9

Unit Coolers

1. Generator Area

Equipment Mark No.	2HVT-UC222A through 222F
Quantity	6

Each unit cooler includes the following components:

a. Fans

Quantity	2
Type	Propeller
Capacity, each, cfm	5,225
Total pressure, each, in W.G.(2)	0.70
Motor, each, hp	2.0

b. Cooling Coil

Type	Finned, tubular
Cooling medium	Service water
Cooling capacity, mbh	191.0

2. North MSR Area

Equipment Mark No.	2HVT-UC221A, 221B
Quantity	2

Each unit cooler includes the following components:

a. Fans

Quantity (per unit cooler)	2
Type	Propeller
Capacity, each, cfm	6,600
Total pressure, each, in W.G.(1)	0.61
Motor, each, hp	1.5

TABLE 9.4-5 (Historical)
(Cont'd.)

b. Cooling Coil	
Type	Finned, tubular
Cooling medium	Service water
Cooling capacity, mbh	242.0

3. South MSR Area

Equipment Mark No.	2HVT-UC223A, 223B
Quantity	2

Each unit cooler includes the following components:

a. Fans	
Quantity (per unit cooler)	2
Type	Propeller
Capacity, each, cfm	6,600
Total pressure, each, in W.G.(1)	0.61
Motor, each, hp	1.5
b. Cooling Coil	
Type	Finned, tubular
Cooling medium	Service water
Cooling capacity, mbh	242.0

4. Reboiler Room

Equipment Mark No.	2HVT-UC219

The unit cooler includes the following components:

a. Fan	
Type	Propeller
Quantity (per unit cooler)	1
Capacity, each, cfm	4,175
Total pressure, each, in W.G.(1)	0.74
Motor, each, hp	1.5
b. Cooling Coil	
Type	Finned, tubular
Cooling medium	Service water
Cooling capacity, mbh	70.0

5. Clean Steam Reboiler Room

Equipment Mark No.	2HVT-UC220

The unit cooler includes the following components:

TABLE 9.4-5 (Historical)
(Cont'd.)

a.	Fan	
	Type	Propeller
	Capacity, cfm	3,075
	Total pressure, in W.G.(1)	1.25
	Motor, hp	1.5
b.	Cooling coil	
	Type	Finned, tubular
	Cooling medium	Service water
	Cooling capacity, mbh	50.0

6. Switchgear Room West

Equipment Mark No.	2HVT-UC224

The unit cooler includes the following components:

a.	Fan	
	Type	Vaneaxial
	Capacity, cfm	6,500
	Total pressure, in W.G.	1.00
	Motor, hp	3
b.	Cooling Coil	
	Type	Finned, tubular
	Cooling medium	Service water
	Cooling capacity, mbh	114.0

7. Generator Leads Cooler Area

Equipment Mark No.	2HVT-UC217A, 217B
Quantity	2

Each unit cooler includes the following components:

a.	Fan	
	Type	Propeller
	Quantity (per unit cooler)	1
	Capacity, each, cfm	8,400
	Total pressure, each, in W.G.(1)	0.65
	Motor, each, hp	3
b.	Cooling Coil	
	Type	Finned, tubular
	Cooling medium	Service water
	Cooling capacity, mbh	154.0

TABLE 9.4-5 (Historical)
(Cont'd.)

8. Heater Bay A

Equipment Mark No.	2HVT-UC215A, 215B
Quantity	2

Each unit cooler includes the following components:

a. Fan

Type	Propeller
Quantity (per unit cooler)	2
Capacity, each, cfm	6,600
Total pressure, each, in W.G.(1)	0.61
Motor, each, hp	1.5

b. Cooling Coil

Type	Finned, tubular
Cooling medium	Service water
Cooling capacity, mbh	242.0

9. Heater Bay B

Equipment Mark No.	2HVT-UC214A, 214B
Quantity	2

Each unit cooler includes the following components:

a. Fan

Type	Propeller
Quantity (per unit cooler)	2
Capacity, each, cfm	6,600
Total pressure, each, in W.G.(1)	0.61
Motor, each, hp	1.5

b. Cooling Coil

Type	Finned, tubular
Cooling medium	Service water
Cooling capacity, mbh	242.0

10. Heater Bay C

Equipment Mark No.	2HVT-UC213A, 213B
Quantity	2

Each unit cooler includes the following components:

TABLE 9.4-5 (Historical)
(Cont'd.)

a. Fan	
Type	Propeller
Quantity (per unit cooler)	2
Capacity, each, cfm	6,600
Total pressure, each, in W.G.(I)	0.61
Motor, each, hp	1.5
b. Cooling Coil	
Type	Finned, tubular
Cooling medium	Service water
Cooling capacity, mbh	242.0
11. North Area of Condenser	
Equipment Mark No.	2HVT-UC216A through 216E
Quantity	5
Each unit cooler includes the following components:	
a. Fan	
Type	Propeller
Quantity (per unit cooler)	3
Capacity, each, cfm	7,333
Total pressure, each, in W.G.(I)	0.63
Motor, each, hp	2
b. Cooling Coil	
Type	Finned, tubular
Cooling medium	Service water
Cooling capacity, mbh	394.0
12. Condenser Tube Removal Area	
Equipment Mark No.	2HVT-UC218A through 218E
Quantity	5
Each unit cooler includes the following components:	
a. Fan	
Type	Propeller
Quantity (per unit cooler)	3
Capacity, each, cfm	7,333
Total pressure, each, in W.G.(I)	0.63
Motor, each, hp	2

TABLE 9.4-5 (Historical)
(Cont'd.)

b. Cooling Coil	
Type	Finned, tubular
Cooling medium	Service water
Cooling capacity, mbh	394.0
13. Switchgear Room East	
Equipment Mark No.	2HVT-UC225
The unit cooler includes the following components:	
a. Fan	
Type	Vaneaxial
Capacity, cfm	6,500
Total pressure, in W.G.	1.10
Motor, hp	3
b. Cooling Coil	
Type	Finned, tubular
Cooling medium	Service water
Cooling capacity, mbh	114.0
14. Condensate Pump Area	
Equipment Mark No.	2HVT-UC207A, 207B
Quantity	2
Each unit cooler includes the following components:	
a. Fan	
Type	Propeller
Quantity (per unit cooler)	3
Capacity, each, cfm	7,700
Total pressure, each, in W.G.(1)	0.78
Motor, each, hp	3
b. Cooling Coil	
Type	Finned, tubular
Cooling medium	Service water
Cooling capacity, mbh	424.0
15. Condensate Pump Area	
Equipment Mark No.	2HVT-UC208A, 208B
Quantity	2
Each unit cooler includes the following components:	

TABLE 9.4-5 (Historical)
(Cont'd.)

a. Fan	
Type	Propeller
Quantity (per unit cooler)	2
Capacity, each, cfm	7,150
Total pressure, each, in W.G.(1)	0.66
Motor, each, hp	2
b. Cooling Coil	
Type	Finned, tubular
Cooling medium	Service water
Cooling capacity, mbh	262.0

16. Condensate Pump Area

Equipment Mark No.	2HVT-UC209A, 209B
Quantity	2

Each unit cooler includes the following components:

a. Fan	
Type	Propeller
Quantity (per unit cooler)	2
Capacity, each, cfm	5,913
Total pressure, each, in W.G.(1)	0.63
Motor, each, hp	1.5
b. Cooling Coil	
Type	Finned, tubular
Cooling medium	Service water
Cooling capacity, mbh	217.0

17. Offgas Rooms

Equipment Mark No.	2HVT-UC205

The unit cooler includes the following components:

a. Fan	
Type	Propeller
Capacity, cfm	4,175
Total pressure, in W.G.(1)	0.74
Motor, hp	1.5
b. Cooling Coil	
Type	Finned, tubular
Cooling medium	Service water
Cooling capacity, mbh	70.0

TABLE 9.4-5 (Historical)
(Cont'd.)

18. Regeneration Area

Equipment Mark No.	2HVT-UC204

The unit cooler includes the following components:

a. Fan

Type	Propeller
Capacity, cfm	4,175
Total pressure, in W.G.(1)	0.74
Motor, hp	1.5

b. Cooling Coil

Type	Finned, tubular
Cooling medium	Service water
Cooling capacity, mbh	70.0

19. Heater Bay A - Elevation 250'-0"

Equipment Mark No.	2HVT-UC203A, 203B
Quantity	2

Each unit cooler includes the following components:

a. Fan

Type	Propeller
Quantity (per unit cooler)	3
Capacity, each, cfm	7,700
Total pressure, each, in W.G.(1)	0.78
Motor, each, hp	3

b. Cooling Coil

Type	Finned, tubular
Cooling medium	Service water
Cooling capacity, mbh	424.0

20. Heater Bay B - Elevation 250'-0"

Equipment Mark No.	2HVT-UC202A, 202B
Quantity	2

Each unit cooler includes the following components:

a. Fan

Type	Propeller
Quantity (per unit cooler)	2
Capacity, each, cfm	7,700

TABLE 9.4-5 (Historical)
(Cont'd.)

Total pressure, each, in W.G.[1]	1.0
Motor, each, hp	3
b. Cooling Coil	
Type	Finned, tubular
Cooling medium	Service water
Cooling capacity, mbh	424.0

21. Heater Bay C

Equipment Mark No.	2HVT-UC201A, 201B
Quantity	2

Each unit cooler includes the following components:

a. Fan	
Type	Propeller
Quantity (per unit cooler)	3
Capacity, each, cfm	7,700
Total pressure, each, in W.G.[1]	1.0
Motor, each, hp	3
b. Cooling Coil	
Type	Finned, tubular
Cooling medium	Service water
Cooling capacity, mbh	424.0

22. Reactor Feed Pump Area

Equipment Mark No.	2HVT-UC206A,C,E
Quantity	3

Each unit cooler includes the following components:

a. Fan	
Type	Propeller
Quantity (per unit cooler)	2
Capacity, each, cfm	10,300
Total pressure, in W.G.[1]	0.61
Motor, each, hp	3
b. Cooling Coil	
Type	Finned, tubular
Cooling medium	Service water
Cooling capacity, mbh	378

TABLE 9.4-5 (Historical)
(Cont'd.)

Equipment Mark No.	2HVT-UC206F
Quantity	1

The unit cooler includes the following components:

a. Fan	
Type	Propeller
Quantity (per unit cooler)	2
Capacity, each, cfm	10,300
Total pressure, each, in W.G.(1)	0.75
Motor, each, hp	3
b. Cooling Coil	
Type	Finned, tubular
Cooling medium	Service water
Cooling capacity, mbh	378.0

Equipment Mark No.	2HVT-UC206B, 206D
Quantity	2

Each unit cooler includes the following components:

a. Fan	
Type	Propeller
Quantity (per unit cooler)	2
Capacity, each, cfm	11,000
Total pressure, each, in W.G.(1)	0.64
Motor, each, hp	3
b. Cooling Coil	
Type	Finned, tubular
Cooling medium	Service water
Cooling capacity, mbh	378.0

23. Condenser Tube Removal Area

Equipment Mark No.	2HVT-UC212A, 212B
Quantity	2

Each unit cooler includes the following components:

a. Fan	
Type	Propeller
Quantity (per unit cooler)	2
Capacity, each, cfm	7,150

TABLE 9.4-5 (Historical)
(Cont'd.)

Total pressure, each, in W.G.[1]	0.66
Motor, each, hp	2
b. Cooling Coil	
Type	Finned, tubular
Cooling medium	Service water
Cooling capacity, mbh	262.0

24. Main Steam Lead Enclosure

Equipment Mark No.	2HVT-UC211

The unit cooler includes the following components:

a. Fan	
Type	Propeller
Capacity, cfm	4,175
Total pressure, in W.G.[1]	0.74
Motor, hp	1.5
b. Cooling Coil	
Type	Finned, tubular
Cooling medium	Service water
Cooling capacity, mbh	70.0

25. Air Compressor Area

Equipment Mark No.	2HVT-UC226

The unit cooler includes the following components:

a. Fan	
Type	Propeller
Quantity	2
Capacity, each, cfm	7,150
Total pressure, each, in W.G.[1]	0.54
Motor, each, hp	2
b. Cooling Coil	
Type	Finned, tubular
Cooling medium	Service water
Cooling capacity, mbh	200.0

TABLE 9.4-5 (Historical)
(Cont'd.)

26. Steam Tunnel

Equipment Mark No.	2HVT-UC210A

The unit cooler includes the following components:

a. Fan	
Type	Vaneaxial
Capacity, cfm	10,450
Total pressure, in W.G.(1)	1.85
Motor, hp	5
b. Cooling Coil	
Type	Finned, tubular
Cooling medium	Service water
Cooling capacity, mbh	191.0

27. Steam Tunnel

Equipment Mark No.	2HVT-UC210B

The unit cooler includes the following components:

a. Fan	
Type	Propeller
Quantity (per unit cooler)	2
Capacity, each, cfm	5,225
Total pressure, each, in W.G.(1)	0.70
Motor, each, hp	2
b. Cooling Coil	
Type	Finned, tubular
Cooling medium	Service water
Cooling capacity, mbh	191.0

Unit Heaters

1. Generator Area

a. Equipment Mark No.	2HVT-UHE237, 238, 239, 240, 243, 244, 245, 246
Quantity	8
Type	Electric
Capacity, each, kW	30

TABLE 9.4-5 (Historical)
(Cont'd.)

2.	East of Turbine Area	
	a. Equipment Mark No.	2HVT-UHE227
	Type	Electric
	Capacity, kW	20
	b. Equipment Mark No.	2HVT-UHE228,241
	Quantity	2
	Type	Electric
	Capacity, each, kW	50
3.	Ventilation Exhaust Equipment Area	
	Equipment Mark No.	2HVT-UHE230 through 235
	Quantity	6
	Type	Electric
	Capacity, each, kW	20
4.	North Moisture Separator Reheater Area	
	Equipment Mark No.	2HVT-UHE236
	Type	Electric
	Capacity, kW	20
5.	South Moisture Separator Reheater Area	
	Equipment Mark No.	2HVT-UHE242
	Type	Electric
	Capacity, kW	20
6.	Clean Steam Reboiler Area	
	Equipment Mark No.	2HVT-UHE229
	Type	Electric
	Capacity, kW	7.5
7.	Elevator Machine Room 1	
	Equipment Mark No.	2HVT-UHE257
	Type	Electric
	Capacity, kW	7.5
8.	Elevator Machine Room 2	
	Equipment Mark No.	2HVT-UHE258
	Type	Electric
	Capacity, kW	12.5

TABLE 9.4-5 (Historical)
(Cont'd.)

9. Elevator Machine Room 3	
Equipment Mark No.	2HVT-UHE255
Type	Electric
Capacity, kW	12.5
10. Ventilation Supply Equipment Area	
Equipment Mark No.	2HVT-UHE219, 220
Quantity	2
Type	Electric
Capacity, kW	30
11. Generator Lead Coolers Area	
Equipment Mark No.	2HVT-UHE221, 225, 226
Quantity	3
Type	Electric
Capacity, each, kW	7.5
12. Charcoal Decay Bed Room	
Equipment Mark No.	2HVT-UHE253, 254
Quantity	2
Type	Electric
Capacity, each, kW	20
13. Condenser Tube Removal Area	
Equipment Mark No.	2HVT-UHE223, 224
Quantity	2
Type	Electric
Capacity, each, kW	7.5
14. East of Tube Removal Area	
Equipment Mark No.	2HVT-UHE218, 222
Quantity	2
Type	Electric
Capacity, each, kW	7.5
15. Railroad Passage	
a. Equipment Mark No.	2HVT-UHE211, 212
Quantity	2
Type	Electric
Capacity, each, kW	40

TABLE 9.4-5 (Historical)
(Cont'd.)

b. Equipment Mark No.	2HVT-UHE210, 249
Quantity	2
Type	Electric
Capacity, each, kW	50
16. Offgas Area	
Equipment Mark No.	2HVT-UHE208, 209
Quantity	2
Type	Electric
Capacity, each, kW	7.5
17. Generation Area	
Equipment Mark No.	2HVT-UHE207
Type	Electric
Capacity, kW	7.5
18. Condensate Pump Area	
a. Equipment Mark No.	2HVT-UHE217
Type	Electric
Capacity, kW	7.5
b. Equipment Mark No.	2HVT-UHE213
Type	Electric
Capacity, kW	20
19. Reactor Feed Pumps Area	
Equipment Mark No.	2HVT-UHE205, 206
Quantity	2
Type	Electric
Capacity, each, kW	7.5
20. Condenser Tube Removal Area	
Equipment Mark No.	2HVT-UHE216
Type	Electric
Capacity, kW	7.5
21. Heater Bay A	
Equipment Mark No.	2HVT-UHE204
Type	Electric
Capacity, kW	7.5

TABLE 9.4-5 (Historical)
(Cont'd.)

22. Heater Bay B	
Equipment Mark No.	2HVT-UHE203
Type	Electric
Capacity, kW	7.5
23. Heater Bay C	
Equipment Mark No.	2HVT-UHE202
Type	Electric
Capacity, kW	7.5
24. North and South of Main Steam Lead Enclosure	
Equipment Mark No.	2HVT-UHE201, 214, 215
Quantity	3
Type	Electric
Capacity, each, kW	7.5

(1) Total static pressure.
(2) Fan external static pressure.

TABLE 9.4-6 (Historical)

DESIGN DATA OF PRINCIPAL EQUIPMENT -
SERVICE BUILDING HEATING AND VENTILATING SYSTEM

Access Passageway	
Supply Air Fan	
Equipment Mark No.	2HVE-FN3
Type	Propeller, roof mounted
Capacity, cfm	1,900
Total pressure, in W.G.(1)	0.42
Motor, hp	1/2
Exhaust Fan	
Equipment Mark No.	2HVE-FN4
Type	Propeller, roof mounted
Capacity, cfm	1,700
Total pressure, in W.G.(1)	0.14
Motor, hp	1/2
Unit Heaters	
Equipment Mark No.	2HVE-UHE513, 514
Quantity	2
Type	Electric
Capacity, each, kW	7.5
Duct Air Heater	
Equipment Mark No.	2HVE-CH1
Type	Electric
Capacity, kW	35
Foam Room	
Exhaust Fan	
Equipment Mark No.	2HVE-FN2
Quantity	1
Type	Propeller, roof mounted
Capacity, cfm	4,300
Total pressure, in W.G.(1)	0.20
Motor, hp	3/4

TABLE 9.4-6 (Historical)
(Cont'd.)

Unit Heaters	
Equipment Mark No.	2HVE-UHE506, 507, 508, 509
Quantity	4
Type	Electric
Capacity, each, kW	7.5
I&C Shop	
I&C Air Conditioning Unit	
Equipment Mark No.	2HVE-ACU1
Type	Package, rooftop
The unit includes the following components:	
Supply Fan:	
Type	Centrifugal
Capacity, cfm	4,000
Total pressure, in W.G.(1)	0.75
Motor, hp	3
Filter:	
Type	Disposable
Media	Fiberglass
Efficiency, %	10
Cooling Coil:	
Type	Finned tubular
Cooling medium	Refrigerant
Cooling capacity, mbh	180
Heating Coil:	
Type	Electric
Capacity, kW	49
Baseboard Heaters	
Equipment Mark No.	2HVE-H1, H2, H3
Quantity	3
Type	Electric
Capacity, kW	1.5
Equipment Mark No.	2HVE-H4, H5, H6
Quantity	3
Type	Electric
Capacity, kW	2.5

TABLE 9.4-6 (Historical)
(Cont'd.)

Service Water Valve Pit	
Unit Heaters	
Equipment Mark No.	2HVE-UHE510, 515, 516, 517
Quantity	4
Type	Electric
Capacity, each, kW	7.5
Entrance Corridor	
Unit Heaters	
Equipment Mark No.	2HVE-UHE511, 512
Quantity	2
Type	Electric
Capacity, each, kW	7.5

(1) Fan external static pressure.

TABLE 9.4-7 (Historical)

DESIGN DATA OF PRINCIPAL EQUIPMENT -
DIESEL GENERATOR BUILDING HVAC SYSTEM

<u>Diesel Generator Rooms Normal Ventilation Exhaust Fans</u> (Diesel engines not operating)	
Equipment Mark No.	2HVP-FN3A, 3B, 4
Quantity	3 (1 fan/room)
Type	Vaneaxial
Capacity, each, cfm	1,540
Total pressure, each, in W.G.	0.75
Motor, each, hp	1
<u>Diesel Generator Rooms Emergency Ventilation Exhaust Fans</u> (Diesel engines operating)	
Equipment Mark No.	2HVP*FN1A, 1B, 1C, 1D, 2A, 2B
Quantity	6 (2 fans/room)
Type	Vaneaxial
Capacity, each, cfm	45,500
Total pressure, each, in W.G.	2.88
Motor, each, hp	30
<u>Diesel Generator Building Control Rooms Unit Coolers</u>	
Equipment Mark No.	2HVP*UC1A, 1B, 2
Quantity	3 (1 unit/control room)
Each unit cooler consists of the following components:	
1. Fan:	
Type	Vaneaxial
Capacity, cfm	3,400
Total pressure, in W.G.	3.4
Motor, hp	5
2. Cooling coil:	
Type	Finned, tubular
Cooling medium	Service water
Cooling capacity, mbh	59.0
3. Filter:	
Type	Disposable
Media	Fiberglass
Efficiency, NBS dustspot, %	50

TABLE 9.4-7 (Historical)
(Cont'd.)

Makeup Air System

The system consists of the following components:

1. Fan:	
Equipment Mark No.	2HVP-FN5
Type	Vaneaxial
Capacity, cfm	4,620
Total pressure, in W.G.	2.55
Motor, hp	5
2. Heater:	
Equipment Mark No.	2HVP-CH1
Type	Electric
Capacity, kW	125
3. Filter:	
Equipment Mark No.	2HVP-FLT1
Type	Disposable
Media	Fiberglass
Efficiency, NBS dustspot, %	50

Unit Heaters

Equipment Mark No.	2HVP-UHE601 through 608
Quantity	8
Type	Electric
Capacity, each, kW	20

TABLE 9.4-8 (Historical)

DESIGN DATA OF PRINCIPAL EQUIPMENT -
MISCELLANEOUS BUILDINGS HVAC SYSTEMS

Screenwell Building

1. Supply Air System:

a. Fans:

Equipment Mark No.	2HVY-FN9A, 9B, 9C
Quantity	3 (50% capacity each)
Type	Vaneaxial
Capacity, each, cfm	40,000
Total pressure, each, in W.G.	5.18
Motor, each, hp	50

b. Filter:

Equipment Mark No.	2HVY-FLT2
Type	Disposable
Media	Fiberglass
Efficiency, NBS dustspot, %	50

2. Circulating Water Pump Area Exhaust Fans:

Equipment Mark No.	2HVY-FN5A, 5B
Quantity	2 (100% capacity each)
Type	Vaneaxial
Capacity, each, cfm	60,000
Total pressure, each, in W.G.	3.64
Motor, each, hp	50

3. Screen Backwash Pump Area Fan:

Equipment Mark No.	2HVY-FN10
Quantity	1
Type	Tubeaxial
Capacity, cfm	5,600
Total pressure, in W.G.(2)	0.45
Motor, hp	1.5

4. Ventilation Exhaust Fans:

Equipment Mark No.	2HVY-FN3A, 3B
Quantity	2
Type	Propeller, roof mounted
Capacity, each, cfm	9,350
Total pressure, each, in W.G.(2)	0.91
Motor, each, hp	1

TABLE 9.4-8 (Historical)
(Cont'd.)

5. Unit Heaters:	
a. Equipment Mark No.	2HVY-UHE808, 809
Quantity	2
Type	Electric
Capacity, each, kW	7.5
b. Equipment Mark No.	2HVY-UHE810 through 819
Quantity	10
Type	Electric
Capacity, each, kW	50
c. Equipment Mark No.	2HVY-UHE821, 822, 823
Quantity	3
Type	Electric
Capacity, each, kW	20
6. Relief Vents:	
Equipment Mark No.	2HVY-RFV1, RFV2
Quantity	2
Type	Hood, roof mounted
Capacity, each, cfm	60,000
<u>Service Water Pump Bays</u>	
1. Unit Coolers:	
Equipment Mark No.	2HVY*UC2A, 2B, 2C, 2D
Quantity	4
Each unit cooler consists of the following major components:	
a. Fan:	
Type	Vaneaxial
Capacity, cfm	30,000
Total pressure, in W.G.	5.0
Motor, hp	40
b. Filter:	
Type	Disposable
Media	Fiberglass
Efficiency, NBS dustspot, %	50
c. Cooling Coil:	
Type	Finned, tubular
Cooling medium	Service water
Cooling capacity, mbh	460.0

TABLE 9.4-8 (Historical)
(Cont'd.)

2. Smoke Exhaust Fan:	
Equipment Mark No.	2HVY-FN17
Type	Centrifugal
Capacity, cfm	6,000
Total pressure, in W.G.(2)	2.13
Motor, hp	5
3. Unit Heaters:	
Equipment Mark No.	2HVY-UHE807, 820
Quantity	2
Type	Electric
Capacity, each, kW	7.5
<u>Fire Pump Rooms</u>	
1. Diesel Fire Pump Room Supply Fan:	
Equipment Mark No.	2HVY-FN11
Type	Vaneaxial
Capacity, cfm	10,100
Total pressure, in W.G.	1.54
Motor, hp	5
2. Diesel Fire Pump Room Exhaust Fan:	
Equipment Mark No.	2HVY-FN7
Type	Propeller, roof mounted
Capacity, cfm	1,300
Total pressure, in W.G.(2)	0.26
Motor, hp	0.5
3. Motor Fire Pump Room Unit Cooler:	
Equipment Mark No.	2HVY-UC1
The unit cooler consists of the following major components:	
a. Fan:	
Type	Propeller
Capacity, cfm	8,200
Total pressure, in W.G.(1)	0.53
Motor, hp	3.0
b. Cooling Coil:	
Type	Finned, tubular
Cooling medium	Fire protection water
Cooling capacity, mbh	123.0

TABLE 9.4-8 (Historical)
(Cont'd.)

4. Unit Heater:	
Equipment Mark No.	2HVY-UHE805
Type	Electric
Capacity, kW	12.5
5. Relief Vent:	
Equipment Mark No.	2HVY-RFV3
Type	Hood, roof mounted
Capacity, cfm	8,200
<u>Demineralized Water Storage Tank Building</u>	
1. Ventilation Exhaust Fan:	
Equipment Mark No.	2HVY-FN8
Type	Propeller, roof mounted
Capacity, cfm	4,300
Total pressure, in W.G.(2)	0.13
Motor, hp	3/4
2. Unit heaters:	
Equipment Mark No.	2HVY-UHE801, 802, 803, 804
Quantity	4
Type	Electric
Capacity, each, kW	30
<u>Condensate Storage Tank Building</u>	
1. Ventilation Exhaust Fans:	
Equipment Mark No.	2HVY-FN4A, 4B
Quantity	2
Type	Propeller, roof mounted
Capacity, each, cfm	16,600
Total pressure, each, in W.G.(2)	0.10
Motor, each, hp	2
2. Condensate Tanks Overflow Exhaust Fans:	
Equipment Mark No.	2HVY-FN18A, 18B
Quantity	2 (100% capacity each)
Type	Vaneaxial
Capacity, each, cfm	2,160
Total pressure, each, in W.G.	4.50
Motor, each, hp	5

TABLE 9.4-8 (Historical)
(Cont'd.)

3. Unit Heaters:	
Equipment Mark No.	2HVY-UHE881 through 886
Quantity	6
Type	Electric
Capacity, each, kW	20
<u>Electrical Bays</u>	
1. Supply Air Fan:	
Equipment Mark No.	2HVY-FN16
Quantity	1
Type	Propeller, wall mounted
Capacity, cfm	4,300
Total pressure, in W.G.(2)	0.46
Motor, hp	1
2. Exhaust Fans:	
Equipment Mark No.	2HVY-FN15A, 15B
Quantity	2
Type	Propeller, roof mounted
Capacity, each, cfm	17,000
Total pressure, each, in W.G.(2)	0.90
Motor, each, hp	7.5
3. Unit Heaters:	
Equipment Mark No.	2HVY-UHE841 through 849
Quantity	9
Type	Electric
Capacity, each, kW	12.5
4. Relief Vent:	
Equipment Mark No.	2HVY-RFV5
Type	Hood, roof mounted
Capacity, cfm	4,300
<u>Screenhouse</u>	
1. Unit Heaters:	
Equipment Mark No.	2HVY-UHE903, 904, 905, 906
Quantity	4
Type	Electric
Capacity, each, kW	12.5

TABLE 9.4-8 (Historical)
(Cont'd.)

Chiller Building

1. Exhaust Fans:	
Equipment Mark No.	2HVY-FN19A, 19B
Quantity	2
Type	Propeller, roof mounted
Capacity, each, cfm	3,600
Total pressure, each, in W.G.(2)	0.10
Motor, each, hp	1/2
2. Unit Heaters:	
Equipment Mark No.	2HVY-UHE900, 901, 902
Quantity	3
Type	Electric
Capacity, each, kW	20

(1) Total static pressure.
(2) Fan external static pressure.

TABLE 9.4-9 (Historical)

DESIGN DATA OF PRINCIPAL EQUIPMENT -
AUXILIARY BOILER BUILDING HEATING AND VENTILATING SYSTEM

Air Handling Units	
Equipment Mark No.	2HVI-HVU1A, 1B
Quantity	2 (100% capacity each)
Type	Packaged, roof-mounted
Each unit includes the following components:	
Fan	
Type	Centrifugal
Capacity, cfm	23,000
Total pressure, in W.G.(1)	2.00
Motor, hp	20
Filter	
Type	Disposable
Media	Fiberglass
Efficiency, NBS dustspot, %	40
Heating coil	
Type	Electric
Capacity, kW	100.0
Return/Exhaust Fans	
Equipment Mark No.	2HVI-FN2A, 2B
Quantity	2 (100% capacity each)
Type	Vaneaxial
Capacity each, cfm	23,000
Total pressure, each, in W.G.	6.0
Motor, each, hp	40
Unit Heaters	
Equipment Mark No.	2HVI-UHE701, 702, 703, 704
Quantity	4
Type	Electric
Capacity, each, kW	20

(1) Fan external static pressure.

TABLE 9.4-10 (Historical)

DESIGN DATA OF PRINCIPAL EQUIPMENT -
AUXILIARY SERVICE BUILDING HVAC SYSTEM

Auxiliary Service Building Air Conditioning Unit	
Equipment Mark No.	2HVL-ACUI
Type	Package, rooftop
The unit includes the following components:	
1. Supply fan:	
Type	Centrifugal
Capacity, cfm	10,000
Total pressure, in W.G.(1)	2.0
Motor, hp	15
2. Filter:	
Type	Disposable
Media	Fiberglass
Efficiency, NBS dustspot, %	35
3. Cooling coil:	
Type	Finned, tubular
Cooling medium	Refrigerant
Cooling capacity, mbh	306.0
4. Heating coil:	
Type	Electric
Capacity, kW	51.7
Auxiliary Service Building Exhaust Fan	
Equipment Mark No.	2HVL-FN5
Type	Centrifugal, floor mounted
Capacity, cfm	2,500
Total pressure, in W.G.(1)	1.25
Motor, hp	1.0
Auxiliary Service Building Duct Air Heaters	
Equipment Mark No.	2HVL-CHI
Type	Electric
Capacity, kW	78
Equipment Mark No.	2HVL-CH2
Type	Electric
Capacity, kW	12

TABLE 9.4-10 (Historical)
(Cont'd.)

Clean Access Area Exhaust Fan	
Equipment Mark No.	2HVL-FN4
Type	In-line centrifugal
Capacity, cfm	4,000
Total pressure, in W.G.(1)	3.00
Motor, hp	5
Clean Access Area Duct Air Heaters	
Equipment Mark No.	2HVL-CH3, 4
Quantity	2
Type	Electric
Capacity, each, kW	60
CO_2 Tank Room Exhaust Fan	
Equipment Mark No.	2HVL-FN1
Type	Propeller, roof mounted
Capacity, cfm	1,700
Total pressure, in W.G.(1)	0.23
Motor, hp	1/4
CO_2 Tank Room Gravity Intake Hood	
Equipment Mark No.	2HVL-HDI
Type	Roof mounted
Capacity, cfm	1,700
CO_2 Tank Room Unit Heaters	
Equipment Mark No.	2HVL-UHE901, 902
Quantity	2
Type	Electric
Capacity, each, kW	12.5

(1) Fan external static pressure

TABLE 9.4-11 (Historical)

DESIGN DATA OF PRINCIPAL EQUIPMENT
PLANT CHILLED WATER SYSTEM

Control Building Chilled Water System	
1. Liquid Chillers:	
Equipment Mark No.	2HVK*CHL1A, 1B
Quantity	2 (100% capacity each)
Type	Centrifugal
Refrigerant	R-11
Capacity, each, tons	145
Entering chilled water temperature, °F	55
Leaving chilled water temperature, °F	45
Chilled water flow rate, each, gpm	340
Condenser water flow rate, each, gpm	340
2. Chilled Water Pumps:	
Equipment Mark No.	2HVK*P1A, 1B
Quantity	2 (100% capacity each)
Type	Centrifugal
Capacity, each, gpm	350
Total head, each, ft	85
Motor, each, hp	15
3. Expansion Tanks:	
Equipment Mark No.	2HVK*TK1A, 1B
Quantity	2 (one per system)
Capacity, each, gal	30
Design pressure, psig	125
Ventilation Chilled Water System	
1. Liquid Chillers:	
Equipment Mark No.	2HVN-CHL1A, 1B, 1C
Quantity	3 (50% capacity each)
Type	Hot water absorption
Capacity, each, tons	400
Hot water flow rate, each, gpm	576
Entering hot water temperature, °F	250
Leaving hot water temperature, °F	225
Entering chilled water temperature, °F	58

TABLE 9.4-11 (Historical)
(Cont'd.)

Leaving chilled water temperature, °F	48
Chilled water flow rate, each, gpm	960
Condenser water flow rate, each, gpm	1,550
2. Chilled Water Pumps:	
Equipment Mark No.	2HVN-P1A, 1B
Quantity	2 (100% capacity each)
Type	Centrifugal
Capacity, each, gpm	1,920
Total head, each, ft	150
Motor, each, hp	125
3. Service Water Pumps:(1)	
Equipment Mark No.	2HVN-P2A, 2B
Quantity	2 (100% capacity each)
Type	Centrifugal
Capacity, each, gpm	3,100
Total head, each, ft	90
Motor, each, hp	125
4. Expansion Tank:	
Equipment Mark No.	2HVN-TK1
Capacity, gal	400
Design pressure, psig	150

(1) These pumps are booster pumps, delivering service water for use as absorption chillers condenser water.

TABLE 9.4-12 (Historical)

DESIGN DATA FOR THE PLANT GLYCOL AND HOT WATER HEATING SYSTEMS

Turbine Building

1.	Glycol Heating Pumps:	
	Equipment Mark No.	2HVG-P1A, 1B
	Quantity	2
	Type	Horizontal centrifugal
	Capacity, each, gpm	470
	Total head, each, ft	75
	Motor, each, hp	15
2.	Glycol Heat Exchanger:	
	Equipment Mark No.	2HVG-E1
	Quantity	1
	Type	Two-pass tube; one-pass shell; fixed tube sheet at both ends
	Design pressure, psig	Shell: 350 Tube: 125
	Design temperature, °F	Shell: 300 Tube: 275
	Total duty, mbh	Shell: 8,812 Tube: 8,812
3.	Air Separator:	
	Equipment Mark No.	2HVG-ASP1
	Quantity	1
	Type	Rolairtrol
	Capacity, gpm	850
	Maximum working pressure, psig	125
	Maximum operating temperature, °F	350
4.	Heating Coils:	
	Equipment Mark No.	2HVT-CH1
	Quantity	4 units right hand
	Type	Aerofin Type C
	Capacity, total, cfm	80,000
	Load, total, mbh	7,412
5.	Glycol Addition Tank:	
	Equipment Mark No.	2HVG-TK4
	Quantity	1
	Type	Horizontal

TABLE 9.4-12 (Historical)
(Cont'd.)

6.	Glycol Loop Drainage Tank:	
	Equipment Mark No.	2HVG-TK7
	Quantity	1
	Type	Horizontal
	Capacity, gal	1,100
7.	Expansion Tank:	
	Equipment Mark No.	2HVG-TK1
	Quantity	1
	Type	Vertical
	Capacity, gal	184
8.	Hot Water Heating Pumps:	
	Equipment Mark No.	2HVH-P1A, 1B
	Quantity	2
	Type	Horizontal centrifugal
	Capacity, each, gpm	1,086
	Total head, each, ft	170
	Motor, each, hp	75
9.	Building Heating Intermediate Heat Exchangers:	
	Equipment Mark No.	2HVH-E1A, 1B
	Quantity	2
	Type	CEU - Horizontal
	Design pressure, psig	Shell: 270 Tube: 350
	Design temperature, °F	Shell: 418 Tube: 400
	Total duty, mbh	Shell: 17,184 Tube: 17,184
10.	Building Heating Auxiliary Heat Exchangers:	
	Equipment Mark No.	2HVH-E3A, 3B
	Quantity	2
	Type	CEU - Horizontal
	Design pressure, psig	Shell: 175 Tube: 350
	Design temperature, °F	Shell: 377 Tube: 400
	Total duty, mbh	Shell: 17,184 Tube: 17,184

TABLE 9.4-12 (Historical)
(Cont'd.)

11. Air Separator:	
Equipment Mark No.	2HVH-ASP1
Quantity	1
Type	Rolairtrol
Capacity, gpm	1,900
Maximum working pressure, psig	350
Maximum operating temperature, °F	650
12. Makeup Water Pumps:	
Equipment Mark No.	2HVH-P2A, 2B
Quantity	2
Type	Metering
Capacity, each, gph	40
Pressure, each, psig	300
Motor, each, hp	1/2
13. Expansion Tank:	
Equipment Mark No.	2HVH-TK1
Quantity	1
Type	Horizontal
Capacity, gal	430
<u>Reactor Building (Standby Gas Treatment Building)</u>	
1. Glycol Heating Pumps:	
Equipment Mark No.	2HVG-P2A, 2B
Quantity	2
Type	Horizontal centrifugal
Capacity, each, gpm	822
Total head, each, ft	115
Motor, each, hp	40
2. Glycol Heat Exchanger:	
Equipment Mark No.	2HVG-E2
Quantity	1
Type	Two-pass tube; one-pass shell; fixed tube sheet at both ends
Design pressure, psig	Shell: 350 Tube: 125
Design temperature, °F	Shell: 375 Tube: 275
Total duty, mbh	Shell: 15,422 Tube: 15,422

TABLE 9.4-12 (Historical)
(Cont'd.)

3.	Air Separator:	
	Equipment Mark No.	2HVG-ASP2
	Quantity	1
	Type	Rolairtrol
	Capacity, gpm	850
	Maximum working pressure, psig	125
	Maximum operating temperature, °F	350
4.	Heating Coils:	
	Equipment Mark No.	2HVR-CH1
	Quantity	4 units left hand 4 units right hand
	Type	Aerofin Type C
	Capacity, total, cfm	140,000
	Load, total, mbh	12,968
5.	Glycol Addition Tank:	
	Equipment Mark No.	2HVG-TK5
	Quantity	1
	Type	Horizontal
6.	Glycol Loop Drainage Tank:	
	Equipment Mark No.	2HVG-TK8
	Quantity	1
	Type	Horizontal
	Capacity, gal	1,300
7.	Expansion Tank:	
	Equipment Mark No.	2HVG-TK2
	Quantity	1
	Type	Vertical
	Capacity, gal	184
<u>Radwaste Building</u>		
1.	Glycol Heating Pumps:	
	Equipment Mark No.	2HVG-P3A, 3B
	Quantity	2
	Type	Horizontal centrifugal
	Capacity, each, gpm	235
	Total head, each, ft	90
	Motor, each, hp	7 1/2

TABLE 9.4-12 (Historical)
(Cont'd.)

2.	Glycol Heat Exchanger:	
	Equipment Mark No.	2HVG-E3
	Quantity	1
	Type	Two-pass tube; one-pass shell; fixed tube sheet at both ends
	Design pressure, psig	Shell: 350 Tube: 125
	Design temperature, °F	Shell: 375 Tube: 275
	Total duty, mbh	Shell: 4,410 Tube: 4,410
3.	Air Separator:	
	Equipment Mark No.	2HVG-ASP3
	Quantity	1
	Type	Rolairtrol
	Capacity, gpm	300
	Maximum working pressure, psig	125
	Maximum operating temperature, °F	350
4.	Heating Coils:	
	Equipment Mark No.	2HVW-CH1
	Quantity	2 units right hand
	Type	Aerofin Type C
	Capacity, total, cfm	47,800
	Load, total, mbh	4,410
5.	Glycol Addition Tank:	
	Equipment Mark No.	2HVG-TK6
	Quantity	1
	Type	Horizontal
6.	Glycol Loop Drainage Tank:	
	Equipment Mark No.	2HVG-TK9
	Quantity	1
	Type	Horizontal
	Capacity, gal	500
7.	Expansion Tank:	
	Equipment Mark No.	2HVG-TK3
	Quantity	1
	Type	Vertical
	Capacity, gal	50

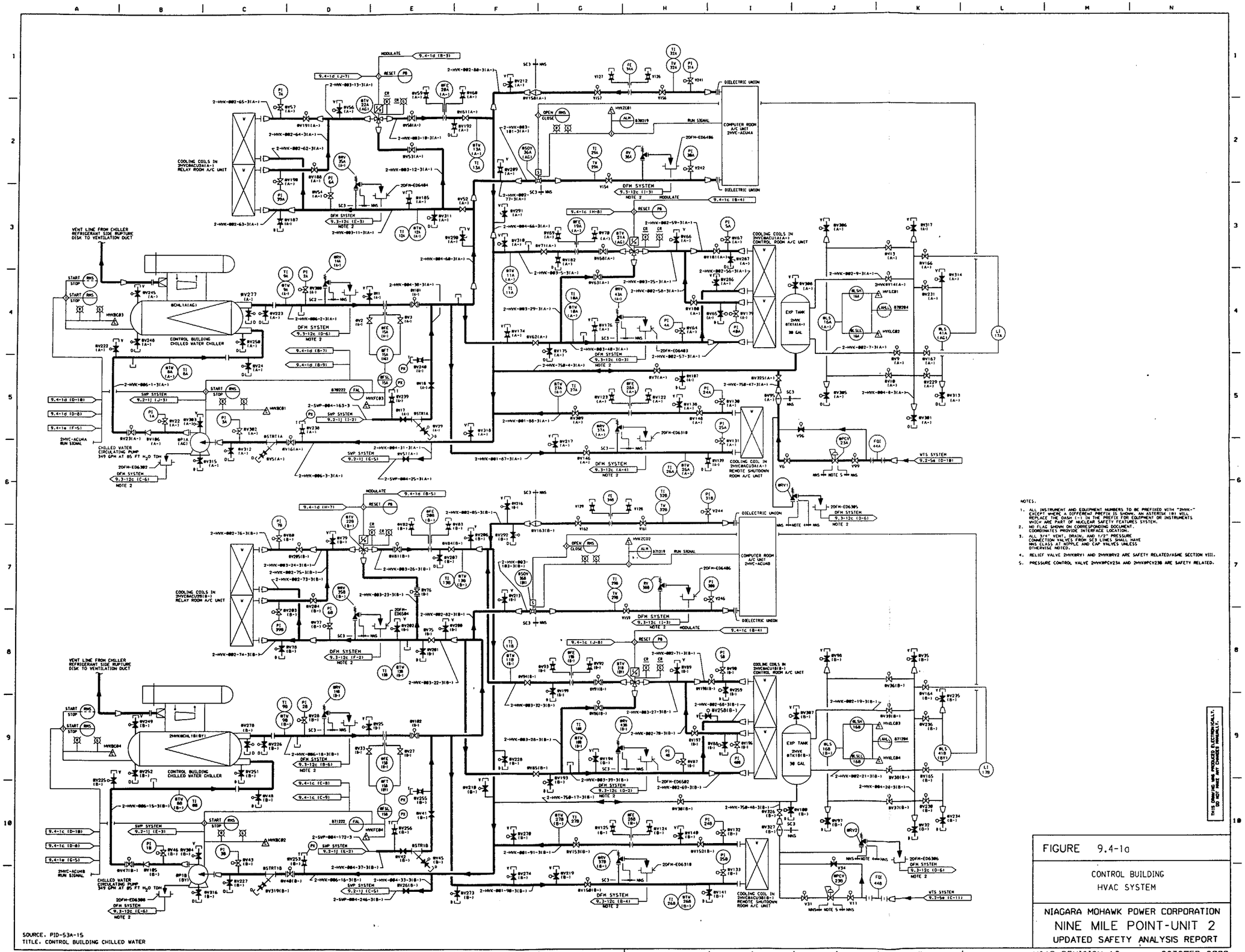

NOTES:

1. ALL INSTRUMENT AND EQUIPMENT NUMBERS TO BE PREFIXED WITH "2HVK-" EXCEPT WHERE A DIFFERENT PREFIX IS SHOWN. AN ASTERISK (*) WILL REPLACE THE DASH (-) IN THE PREFIX FOR EQUIPMENT OR INSTRUMENTS WHICH ARE PART OF NUCLEAR SAFETY FEATURES SYSTEM.
2. NO FLAG SHOWN ON CORRESPONDING DOCUMENT. COORDINATES PROVIDE INTERFACE LOCATION.
3. ALL 3/4" VENT, DRAIN, AND 1/2" PRESSURE CONNECTION VALVES FROM SC3 LINES SHALL HAVE NNS CLASS AT NIPPLE AND CAP VALVES UNLESS OTHERWISE NOTED.
4. RELIEF VALVE 2HVKBRY1 AND 2HVKBRY2 ARE SAFETY RELATED/ASME SECTION VIII.
5. PRESSURE CONTROL VALVE 2HVKBPCV23A AND 2HVKBPCV23B ARE SAFETY RELATED.

THIS DRAWING WAS PRODUCED ELECTRONICALLY. DO NOT MAKE ANY CHANGES MANUALLY.

FIGURE 9.4-1a

CONTROL BUILDING
HVAC SYSTEM

NIAGARA MOHAWK POWER CORPORATION
NINE MILE POINT-UNIT 2
UPDATED SAFETY ANALYSIS REPORT

SOURCE. PID-53A-15
TITLE. CONTROL BUILDING CHILLED WATER

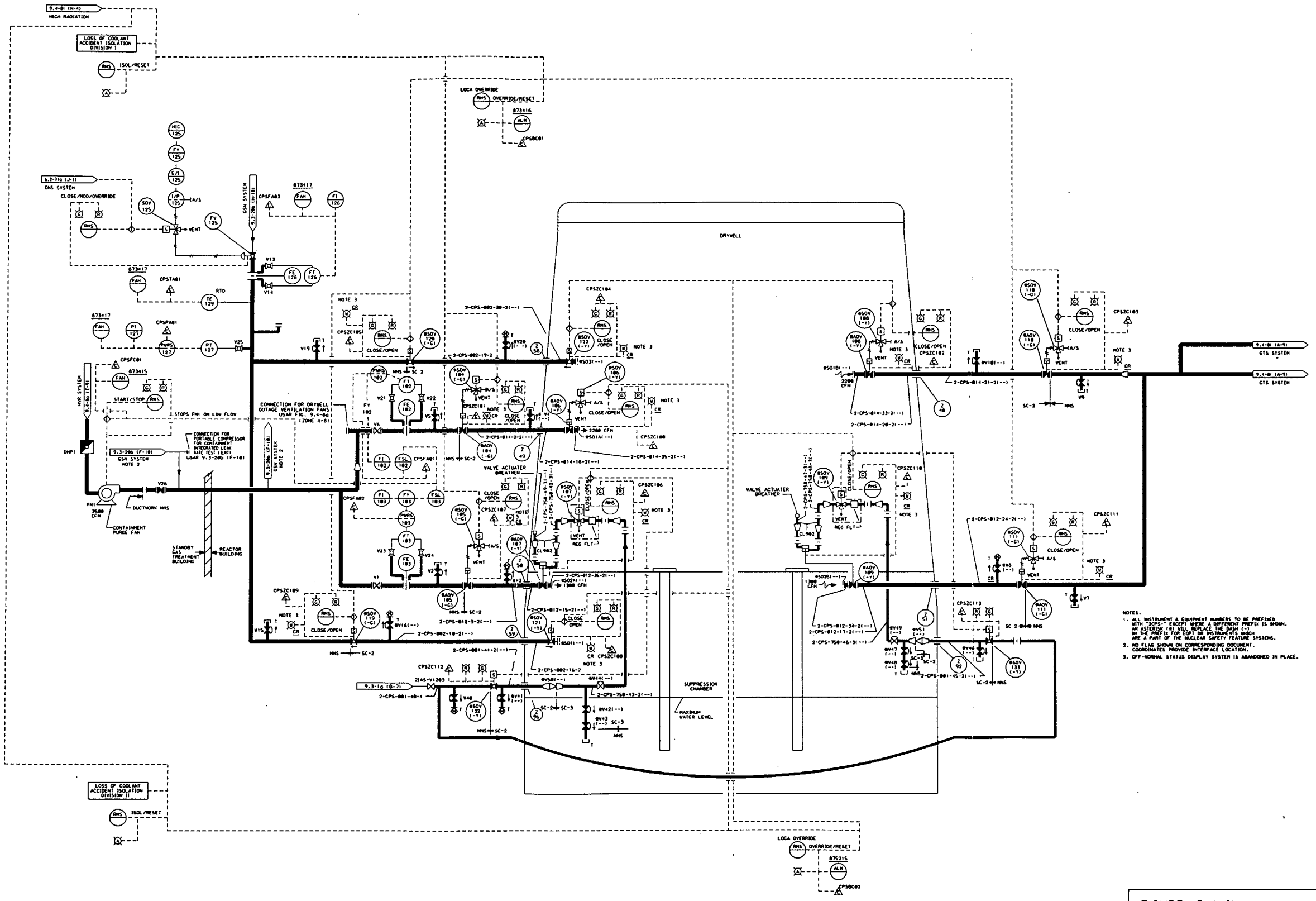

NOTES:

1. ALL INSTRUMENT & EQUIPMENT NUMBERS TO BE PREFIXED WITH "2CPS-" EXCEPT WHERE A DIFFERENT PREFIX IS SHOWN. AN ASTERISK (*) WILL REPLACE THE DASH (-) IN THE PREFIX FOR EQPT OR INSTRUMENTS WHICH ARE A PART OF THE NUCLEAR SAFETY FEATURE SYSTEMS.
2. NO FLAG SHOWN ON CORRESPONDING DOCUMENT. COORDINATES PROVIDE INTERFACE LOCATION.
3. OFF-NORMAL STATUS DISPLAY SYSTEM IS ABANDONED IN PLACE.

SOURCE. PID-61A-11
TITLE. PRIMARY CONTAINMENT PURGE AND STANDBY GAS TREATMENT

FIGURE 9.4-8k

PRIMARY CONTAINMENT PURGE AND STANDBY GAS TREATMENT

NIAGARA MOHAWK POWER CORPORATION
NINE MILE POINT-UNIT 2
UPDATED SAFETY ANALYSIS REPORT

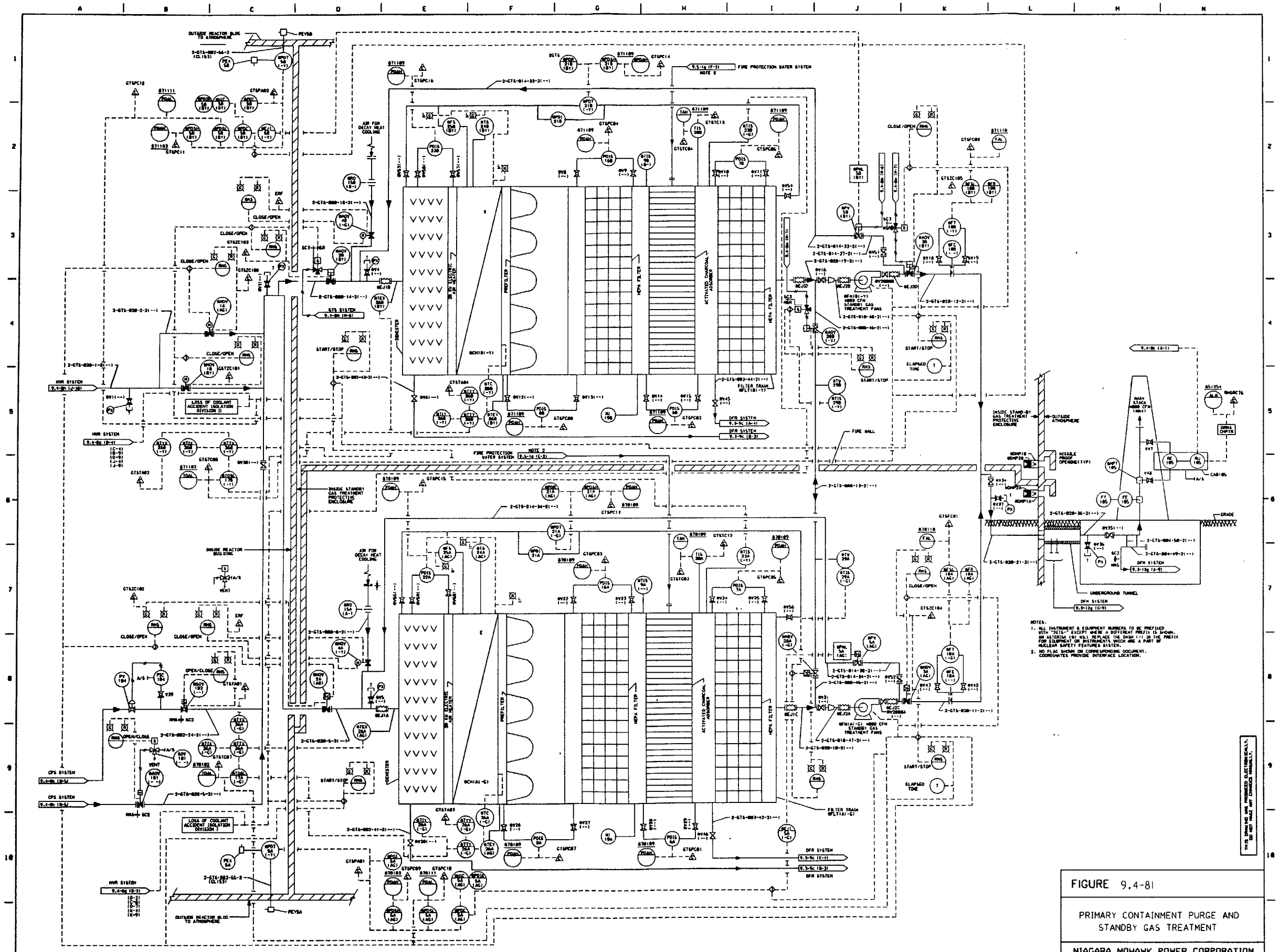

SOURCE: PID-618-19
TITLE: PRIMARY CONTAINMENT PURGE AND STANDBY GAS TREATMENT

FIGURE 9.4-81

PRIMARY CONTAINMENT PURGE AND STANDBY GAS TREATMENT

NIAGARA MOHAWK POWER CORPORATION
NINE MILE POINT-UNIT 2
UPDATED SAFETY ANALYSIS REPORT

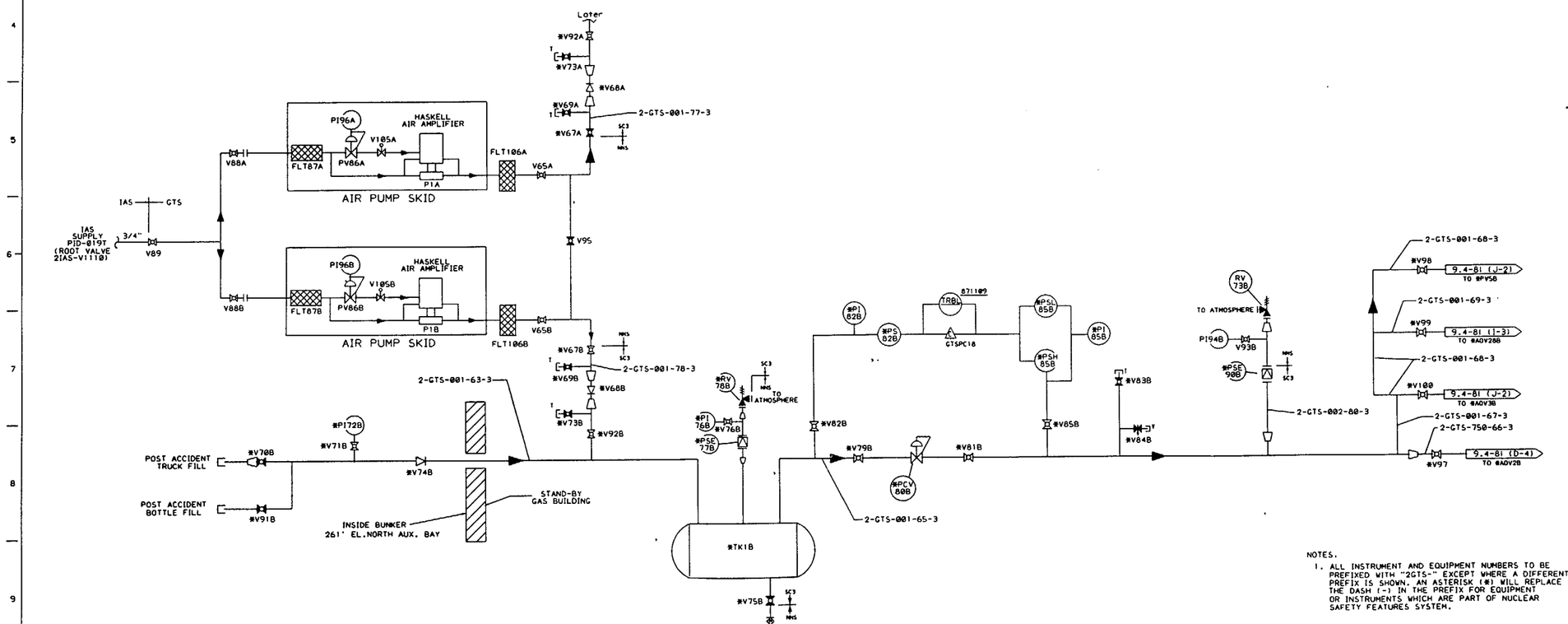

NOTES.

1. ALL INSTRUMENT AND EQUIPMENT NUMBERS TO BE PREFIXED WITH "2GTS-" EXCEPT WHERE A DIFFERENT PREFIX IS SHOWN. AN ASTERISK (*) WILL REPLACE THE DASH (-) IN THE PREFIX FOR EQUIPMENT OR INSTRUMENTS WHICH ARE PART OF NUCLEAR SAFETY FEATURES SYSTEM.

THIS DRAWING WAS PRODUCED ELECTRONICALLY. DO NOT MAKE ANY CHANGES MANUALLY.

SOURCE. PID-861C-4
TITLE. STANDBY GAS

FIGURE 9.4-8m

STANDBY GAS TREATMENT

NIAGARA MOHAWK POWER CORPORATION
NINE MILE POINT-UNIT 2
UPDATED SAFETY ANALYSIS REPORT