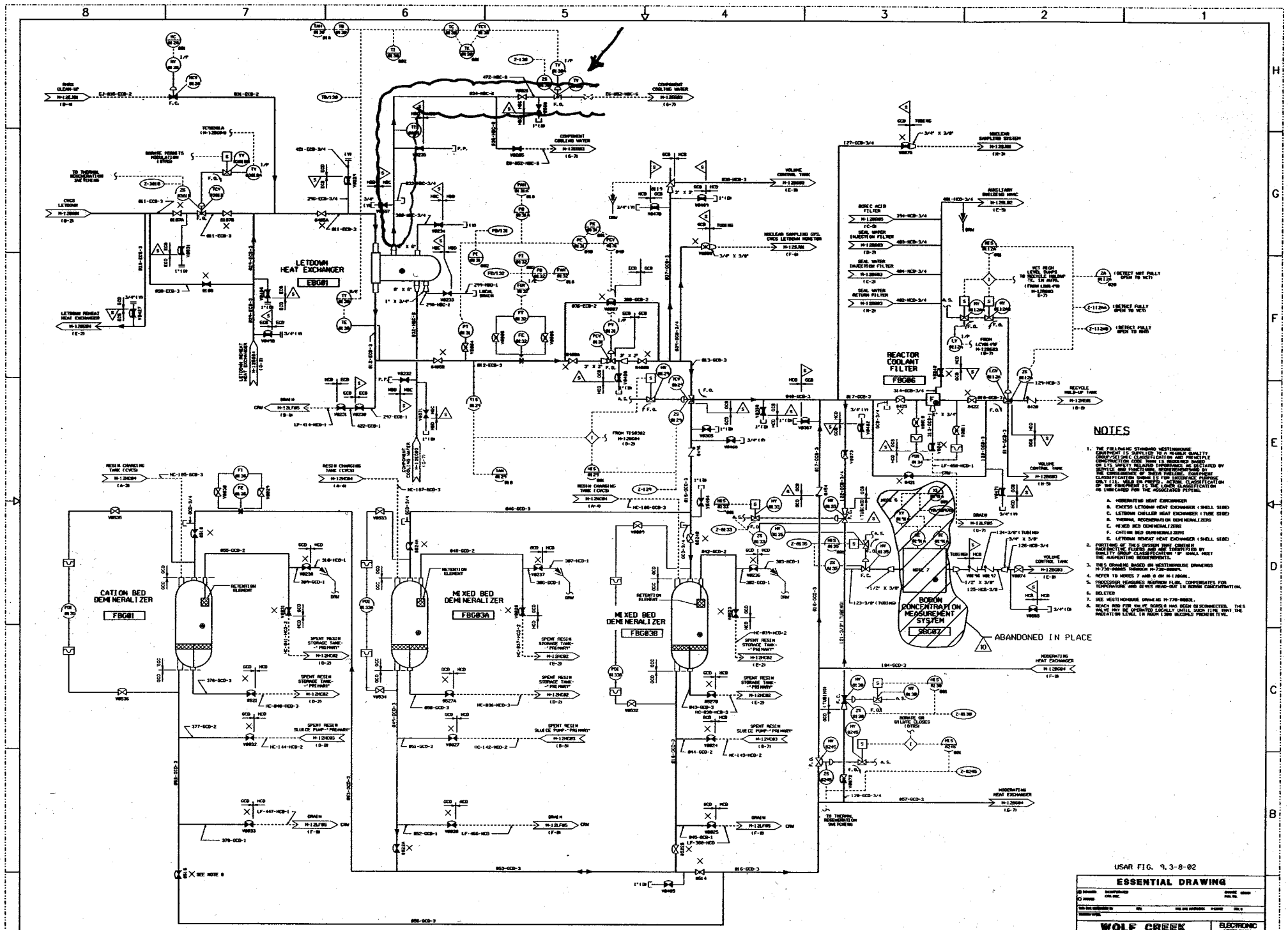

Released By Document Services Release Date: 01/06/00