Nuclear Operating Company
South Texas Project Electric Generating Station P.O. Box 289 Wadsworth, Texas 77483

August 16, 2000
ST-NOC-AE-00000908
File No.: G9.8
No. ST 31157460
ER20000131
10CFR50.47

U.S. Nuclear Regulatory Commission
Attention: Document Control Desk
Washington, D.C. 20555

South Texas Project
Units 1 and 2
Docket Nos. STN 50-498, STN 50-499
2000 Evaluated Emergency Preparedness Exercise Scenario

Enclosed for your review and comment is the scenario for the Evaluated Emergency Preparedness Exercise at the South Texas Project Electric Generating Station scheduled for October 18, 2000. The scenario has been held in strict confidence within the STP Nuclear Operating Company (STPNOC) limited to our Scenario Development Committee, Scenario Management Review Committee, Controllers and Evaluators, to ensure that the players for the exercise are not aware of its contents. STP Nuclear Operating Company requests that NRC consider the attachment as proprietary information pursuant to 10CFR2.790 until after the evaluated exercise on the basis that public disclosure prior to the exercise could bias the results of the exercise.

If you should have any questions, please contact Mr. F. J. Puleo at (361) 972-8697 or myself at (361) 972-8053.

P. L. Serra
Manager, Plant Protection

FJP/mk

Enclosure: 2000 Evaluated Emergency Preparedness Exercise Scenario

DF01
10/19/00

0037422

cc:*

*Tom Andrews (2 copies)
Region IV Office of Regional Administrator,
U. S. Nuclear Regulatory Commission
611 Ryan Plaza Drive, Suite 400
Arlington, TX 76011-8064

John A. Nakoski
Project Manager, Mail Stop OWFN/7-D-1
U. S. Nuclear Regulatory Commission
Washington, DC 20555-0001

Cornelius F. O'Keefe
Sr. Resident Inspector
c/o U. S. Nuclear Regulatory Comm.
P. O. Box 910
Bay City, TX 77404-0910

Tae (T. J.) Kim
U. S. Nuclear Regulatory Commission
Mail Stop OWFN/7-D-1
Washington, DC 20555-0001

D. G. Tees/R. L.Balcom
Houston Lighting & Power Co.
P. O. Box 1700
Houston, TX 77251

C. A. Johnson/R. P. Powers
AEP - Central Power and Light
P. O. Box 289, Mail Code: N5022
Wadsworth, TX 77483

Jon C. Wood
Matthews & Branscomb
One Alamo Center
106 S. St. Mary's Street, Suite 700
San Antonio, TX 78205-3692

Institute of Nuclear Power
Operations - Records Center
700 Galleria Parkway
Atlanta, GA 30339-5957

Richard A. Ratliff
Bureau of Radiation Control
Texas Department of Health
1100 West 49th Street
Austin, TX 78756-3189

A. H. Gutterman, Esquire
Morgan, Lewis & Bockius
1800 M Street, N.W.
Washington, DC 20036-5869

W. C. Gunst/M. T. Hardt
City Public Service
P. O. Box 1771
San Antonio, TX 78296

A. Ramirez/C. M. Canady
City of Austin
Electric Utility Department
721 Barton Springs Road
Austin, TX 78704

*Office of Nuclear Regulatory Research
U. S. Nuclear Regulatory Commission
Attention: Document Control Desk
Washington, D.C. 20555-0001

* The above copies distributed without Attachment except as noted by the asterisk. If copies are required, please contact us.

SOUTH TEXAS PROJECT
ELECTRIC GENERATING
STATION

South Texas Project

Evaluated Exercise

October 18, 2000

003743063

M-0831.DWG

South Texas Project

Evaluated Exercise

October 18, 2000

1. INTRODUCTION

The South Texas Project Electric Generating Station (STPEGS), and offsite agencies annually conduct Emergency Preparedness Drills and Exercises for the purpose of demonstrating that the STPEGS emergency response organization, and offsite agencies can effectively meet their responsibilities in protecting the health and safety of the residents of the Plume Exposure Pathway Emergency Planning Zone in the event of a radiological incident at the plant. Exercises simulate accident conditions and radiological hazards that require major portions of utility, state and local emergency response plans and procedures to be implemented on a routine basis.

The Exercise is designed to demonstrate that designated individuals and agencies are adequately trained and supported by adequate procedures and equipment to respond effectively to a radiological emergency at STPEGS. Exercises are evaluated and critiqued by the Emergency Response staff and selected trained evaluators. The Exercise scenario is sufficient to require complete activation of the STPEGS emergency response organization and selected offsite agency facilities for accident mitigation.

The Exercise will be conducted on October 18, 2000 onsite will be conducted by STPEGS personnel and evaluated by STPEGS personnel. Upon termination of the Exercise, the STPEGS Evaluators will critique the response of the players, assess the effectiveness of their response, and compile a Critique Report for distribution to management to ensure appropriate actions are taken to resolve any weaknesses that are identified.

This Exercise Manual provides all information required supporting successful conduct and evaluation of the Exercise. Exercise participants will not have prior knowledge of the scenario, sequence of events, or plume release information regarding times, content, size and weather pattern used, with the exception of normal weather forecasts available onsite. It is to be used by the Controllers and Evaluators to ensure that consistent and accurate data is provided to Players during the course of their response to the sequence of events. The Exercise manual is organized as follows:

Section 1.0 Introduction - this section sets forth the basic format for the manual.

Section 2.0 Objectives - this section sets forth the objectives to be met by the Station and Emergency Response Organization in the conduct of the Exercise, and the Offsite objectives that will be demonstrated by the participants involved from the State and County.

Section 3.0 Extent of Play - this section sets forth the guidelines, which govern the extent of participation to be followed by the participants in the conduct of the Exercise.

Section 4.0 Scenario - this section contains the information that comprises the postulated accident that must be mitigated.

Subsection 4.1-4.4 Scenario - these subsections describe the postulated initial conditions and timeline sequence of events occurring at STPEGS and at various locations which will require the Station Emergency Response Organizations to respond.

Subsection 4.5 Site Messages - this subsection contains copies of the Exercise messages, which will be utilized to control the development of the Exercise scenario.

Subsection 4.6 Supplemental Scenarios - this subsection contains time-related information concerning the various work in progress and scenario generated malfunctions of equipment.

Subsection 4.7 Offsite and JIC (Joint Information Center) Messages - this subsection contains copies of the Exercise messages to be used at the JIC and Offsite participants to define and describe the scenario offsite.

Subsection 4.8-4.8.3 Radiological Information - these subsections contain time related information concerning radiological conditions at the various onsite monitoring locations which corresponds to the development of the Exercise scenario. Also included in these subsections are information related to primary and secondary system radiochemistry, containment atmosphere radiochemistry, radiological release rates, and in-plant radiation levels.

Subsection 4.8.4 Meteorological Information - this subsection contains meteorological information including temperature, wind direction, wind speed and delta T indicating stability class, for Dose Assessment, Assembly and Accountability, and evacuation activities.

Subsection 4.8.5 Onsite Plume Data- this subsection contains information related to onsite radiological plume data during the release phase.

Subsection 4.8.6 Offsite Plume Data- this subsection contains information related to offsite radiological plume data during the release phase.

Section 4.9 Plant Data - this section contains information related to the primary, secondary, and effluent parameters as displayed on the plant Integrated Computer System (ICS).

Section 5.0 Controllers Instructions - this section provides general instructions to the Exercise controllers in the conduct of the Exercise, any required special instructions for the controllers and a Controller/Evaluator list.

Section 6.0 Evaluation Material- this section provides evaluation checklists to the controllers and/or evaluators for evaluating responses of the participants and the overall performance of the Exercise.

Section 7.0 Support Documents- this section contains existing plant condition work packages and tag outs.

2.0 SCOPE AND OBJECTIVES

2.1 Scope

The 2000 South Texas Project Electric Generating Station (STPEGS) Emergency Preparedness Graded Exercise, to be conducted on October 18, 2000, has been developed to support demonstration of the capabilities of the South Texas Project, the State of Texas, and the County of Matagorda, Texas Emergency Response Organizations. The Exercise will test and provide the opportunity to evaluate the emergency plans and procedures of the South Texas Project, the State of Texas, and the County of Matagorda, Texas. It will test the ability of participants to assess and respond to emergency conditions and coordinate activities to protect the health and safety of individuals in the plant and in the vicinity of STPEGS from the consequences of a radiological incident. The Exercise will include full activation and participation of the entire South Texas Project Emergency Onsite Facilities which will be evaluated by the Nuclear Regulatory Commission (NRC). The State of Texas, and County of Matagorda emergency facilities and objectives will be demonstrated and evaluated by the Federal Emergency Management Agency (FEMA) in accordance with the objectives and extent of play in Section 2.3, "Offsite Objectives".

In addition, the Exercise will provide the South Texas Project, the State of Texas, and Matagorda County with the opportunity to assess the effectiveness of training improvements and modifications made to the Emergency Plans and Procedures since the last Exercise.

The following summary indicates which emergency response facilities will participate in the 2000 STPEGS Emergency Preparedness Exercise:

<u>South Texas Project Nuclear Operating Co.</u>

Control Room (CR) Simulator -	STPEGS
Technical Support Center (TSC) -	STPEGS
Operations Support Center (OSC) -	STPEGS
Emergency Operations Facility (EOF) -	STPEGS
Joint Information Center (JIC) -	Bay City, Texas

<u>State of Texas / Matagorda County</u>

Disaster District Sub-2C Emergency Operations Center	Pierce, Texas
Bureau of Radiation Control Operations	STPEGS EOF
Joint Information Center	Bay City, Texas
McAllister Reception Center	Bay City, Texas
Matagorda County Emergency Operations Center	Bay City, Texas
Bureau of Radiation Control Staging Area	Bay City, Texas
Bureau of Radiation Control Mobile Laboratory	Bay City, Texas

Bureau of Radiation Control Field Monitoring Teams	10 Mile EPZ
Two Access Control Points	10 Mile EPZ

2.2 Onsite Objectives

Exercise objectives are provided under this heading. Objectives provide a basis for scenario development and a means to evaluate responses by the Emergency Response Organization.

The STPEGS radiological emergency preparedness Exercise objectives are based on Nuclear Regulatory Commission (NRC) requirements provided in 10 CFR 50.47, "Emergency Plans", and 10 CFR 50, Appendix E, "Emergency Planning and Preparedness for Production and Utilization Facilities". Additional guidance provided in NUREG-0654/FEMA-REP-1, Revision 1, "Criteria for Preparation and Evaluation of Radiological Emergency Response Plans and Preparedness in Support of Nuclear Power Plants", was utilized in developing the objectives.

This Exercise meets the requirements for a semi-annual Health Physics drill in accordance with NUREG 0654 N.2.e. This Exercise involves response to, and analysis of, simulated elevated airborne and liquid samples and direct radiation measurements in the environment.

This Exercise meets the requirements for a Communication drill in accordance with NUREG 0654 N.2.a. Communications between the nuclear facility, state and local Emergency Operations Centers, and field assessment teams will be demonstrated.

This Exercise meets the requirements for an Exercise in accordance with NUREG 0654 N.1.a. This Exercise will simulate an emergency that results in offsite radiological releases, which will require response by offsite authorities.

This Exercise will be evaluated for Drill and Exercise Performance Indicators, in accordance with NEI 99-02 Rev. 0, Regulatory Assessment Performance Indicator Guidelines.

This Exercise will meet the five year objective to Conduct a Post accident recovery and re-entry seminar with Federal, State and local officials.

This Exercise will meet the five year objective for coordinating and interfacing with the Nuclear Regulatory Commission co-location team.

Objectives are grouped according to functional area of emergency response. Additionally, objectives have been cross referenced to major or parent Emergency

Plan Implementing Procedures used in demonstrating the objective, and to any related open weaknesses from previous years' exercises.

General Objectives:

1. Demonstrate the adequacy of the STPEGS Emergency Plan, and the Emergency Plan Implementing Procedures.

   [1]NUREG-0654 ref: A, B, C, D, E, F, G, H, I, J, K, L, M, N, O, P
   [2]Major EPIP ref: ALL

2. Demonstrate the ability to activate, staff and operate the Technical Support Center (TSC), Operations Support Center (OSC), Emergency Operations Facility (EOF), and Joint Information Center (JIC) within the time frames specified in the Emergency Plan.

   [1]NUREG-0654 ref: B.5; G.3; H.1-3, 6-9,12; J.1, 4, J.6.a-c, 10.a-b, E.2; F.1,2,3
   [2]Major EPIP ref: OERP01-ZV-IN03, -TS01, -OS01, -EF01, -OF02

3. Demonstrate the reliability and effective use of normal and emergency communications equipment and procedures.

   [1]NUREG-0654 ref: F.1-3
   [2]Major EPIP ref: OERP01-ZV-IN02

4. Demonstrate the ability to coordinate and effectively interface with State and NRC Protective Response Team representatives assigned to the onsite emergency facilities. (5 Year Objective)

   [1]NUREG-0654 ref: A.3, B.6, and C.2.a-b
   [2]Major EPIP ref: OERP01-ZV-EF07, 08, 21, -TS01, 02, 04

5. Demonstrate the ability to provide an exercise scenario and controller organization that permits testing a major portion of the emergency plan.

   [1]NUREG-0654 ref: N.1.a-b
   [2]Major EPIP ref: OPGP05-ZV-0001

6. Demonstrate the ability to conduct a post-exercise critique to identify weak or deficient areas that need correction.

   [1]NUREG-0654 ref: N.4, 5
   [2]Major EPIP ref: OPGP05-ZV-0001

Accident Assessment, Classification and Mitigation

7. Demonstrate the ability to assess plant conditions.

   [1]NUREG-0654 ref: D.1-2; H.5; I.1
   [2]Major EPIP ref: OERP01-ZV-SHO1, -TS07

8. Demonstrate the ability to identify projected trends and potential consequences.

   [1]NUREG-0654 ref: D.1-2; H.5; I.1
   [2]Major EPIP ref: OERP01-ZV-TS04, -TS07

9. Demonstrate the ability to classify emergency events per the Classification Procedure OERP01-ZV-IN01. (Performance Indicator)

   [1]NUREG-0654 ref: D.1-2; H.5; I.1
   [2]Major EPIP ref: OERP01-ZV-IN01

10. Demonstrate the ability to provide technical support for operations in accident assessment and mitigation.

    [1]NUREG-0654 ref: B.7.a-b
    [2]Major EPIP ref: OERP01-ZV-TS03

Notification and Mobilization

11. Demonstrate the ability to alert and notify STPEGS emergency response personnel in a timely manner.

    [1]NUREG-0654 ref: A.1.e; B.1, 5,7.a; E.2; F.1.e
    [2]Major EPIP ref: OERP01-ZV-IN03

12. Demonstrate the ability of STPEGS to notify federal, state and county agencies within the time frames specified in the Emergency Plan. (Performance Indicator)

    [1]NUREG-0654 ref: A.1.e; B.4, 7.c; E.1-4; F.1; J.7; N.2.a
    [2]Major EPIP ref: OERP01-ZV-IN02

13. Demonstrate the ability to correctly complete the Offsite Agency Notification Form. (Performance Indicator)

[1]NUREG-0654 ref: A.1.e; B.4, 7.c; E.1-4; F.1; J.7; N.2.a
[2]Major EPIP ref: OERP01-ZV-IN02

14. Demonstrate the ability to alert, advise and direct onsite non-essential personnel.

[1]NUREG-0654 ref: J.1, 4
[2]Major EPIP ref: OERP01-ZV-IN04

Direction and Control

15. Demonstrate the ability to direct and coordinate emergency responses.

[1]NUREG-0654 ref: A.1.d; B.2-7.a-b
[2]Major EPIP ref: OERP01-ZV-SHO1, -TS01, -EF01

16. Demonstrate the ability to transfer emergency direction from the Control Room (CR), to the TSC, and finally to the EOF, or from the Control Room directly to the EOF.

[1]NUREG-0654 ref: A.1.d; B.3-5
[2]Major EPIP ref: OERP01-ZV-SHO1, -TS01, -EF01

Radiological Assessment and Control

17. Demonstrate the ability to provide radiological monitoring and decontamination capabilities for onsite and non-essential personnel.

[1]NUREG-0654 ref: J.3-4; K.7
[2]Major EPIP ref: OERP01-ZV-IN06

18. Demonstrate the ability to provide onsite contamination controls, and area access controls.

[1]NUREG-0654 ref: K.5, 6
[2]Major EPIP ref: OERP01-ZV-IN06

19. Demonstrate the ability to continuously monitor and control emergency worker exposures.

[1]NUREG-0654 ref: K.1.a-g, 2,3.a-b
[2]Major EPIP ref: OERP01-ZV-IN06

20. Demonstrate the ability to monitor, assess, and correlate onsite radiological conditions.

[1]NUREG-0654 ref: H.5.b, c, 9; I.1-3; N.2.d, e.1
[2]Major EPIP ref: OERP01-ZV-SH02,-TS04, -TS05,and -OS03

21. Demonstrate the ability to collect, analyze and evaluate simulated radiological samples and surveys.

[1]NUREG-0654 ref: H.5.b, 7; N.2.d, e.1
[2]Major EPIP ref: OERP01-ZV-TS04,-OS03,-OS06

22. Demonstrate the ability to assess core damage.

[1]NUREG-0654 ref: I.3; M.1
[2]Major EPIP ref: OERP01-ZV-TS05, -TS07

23. Demonstrate the ability to simulate taking a PASS sample.

[1]NUREG-0654 ref: H.5.b
[2]Major EPIP ref: OERP01-ZV-SH01, -TS01, -EF01, and -TS05

24. Demonstrate the ability to determine source terms and dose projections, evaluate dose projections against protective action guides and determine appropriate onsite and offsite protective actions. (Performance Indicator)

[1]NUREG-0654 ref: H.6a, 8; I.3-7, 9-10; J.10.m
[2]Major EPIP ref: OERP01-ZV-IN07, -TS05
[3]Exercise Weakness 50-498; 499/98013-01 Failure *to recognize the need to make PARs beyond 10 miles.*

25. Demonstrate the ability to make timely protective action recommendations to offsite agencies. (Performance Indicator)

[1]NUREG-0654 ref: I.5-11, J.7
[2]Major EPIP ref: OERP01-ZV-IN07

26. Demonstrate the ability to adequately form, brief, dispatch, and debrief Emergency Teams.

    [1]NUREG-0654 ref: H.5.b, 7; N.2.d, e.1
    [2]Major EPIP ref: OERP01-ZV-OS01, -OS03, -OS06

Public Information

27. Demonstrate the capability to coordinate the preparation, review and release of information with, state and local government agencies; and provide press releases to the media in a timely manner.

    [1]NUREG-0654 ref: B.7.d; G.4.a, b; G.4.c
    [2]Major EPIP ref: OERP01-ZV-EF25, -OF02

28. Demonstrate the capability at the JIC to respond directly to questions from the media and/or public concerning real and rumored events of an emergency at STPEGS.

    [1]NUREG-0654 ref: B.7.d; G.4.a, b; G.4.c
    [2]Major EPIP ref: OERP01-ZV-EF25, -OF02

29. Demonstrate the capability at the JIC to identify rumors and correct false information concerning an emergency at STPEGS.

    [1]NUREG-0654 ref: B.7.d; G.4.a, b; G.4.c
    [2]Major EPIP ref: OERP01-ZV-EF25, -OF02

30. Demonstrate the capability at the JIC to coordinate and assemble emergency information for dissemination to the media and/or public.

    [1]NUREG-0654 ref: B.7.d; G.4.a, b; G.4.c
    [2]Major EPIP ref: OERP01-ZV-EF25, -OF02

Security

31. Demonstrate the ability to control access to the Owner Controlled Area, the Protected Area and the Emergency Response Facilities.

[1]NUREG-0654 ref: J.1, 4
[2]Major EPIP ref: OERP01-ZV-TS08, SH03

32. Demonstrate the ability to provide initial and continuous accountability of onsite individuals.

[1]NUREG-0654 ref: J.1-5
[2]Major EPIP ref: OERP01-ZV-INO4, -INO5, -SH03, and -TS08

Five Year Objective

33. Demonstrate the ability to conduct a post accident recovery and re-entry seminar with Federal, State and local officials.

[1]NUREG-0654 ref: M.
[2]Major EPIP ref: OERP01-ZV-RE01

FOOTNOTES

[1] References related emergency planning objectives provided as guidance in NUREG-0654/FEMA-REP-1 Rev. 1, "Criteria for Preparation and Evaluation of Radiological Emergency Response Plans and Preparedness in Support of Nuclear Power Plants" as based on NRC requirements provided in 10 CFR 50, Appendix E, "Emergency Planning and Preparedness for Production and Utilization Facilities".

[2] References major STPEGS Emergency Plan Implementing Procedure(s) used in demonstrating the objective. Other procedures may be applicable but will generally be referenced by, or branched from, the major procedure.

[3] References NRC Inspection Report 50-498; 499/98013-01 Exercise Weakness- Failure to recognize the need to make protective action recommendations beyond 10 miles.

2.3 Offsite Objectives

Objective 1: Mobilization of Emergency Personnel

Demonstrate the capability to alert and fully mobilize personnel for both emergency facilities and field operations. Demonstrate the capability to activate and staff emergency facilities for emergency operations.

Locations: Bureau of Radiation Control (BRC) Operations at STP EOF; Joint Information Center (Bay City); BRC Staging Area (Bay City); BRC Mobile Laboratory (Bay City); State (BRC) Field Monitoring Teams (Bay City); State Contamination Control Teams (Bay City); Matagorda County EOC (Bay City); McAllister Reception Center (Bay City); State EOC (Austin); Disaster District EOC (Pierce); Bus Driver Demonstration; Traffic and Access Control Demonstration.

Extent of Play:

1) The Bureau of Radiation Control and DPS personnel not stationed in the Matagorda County area will pre-stage at the BRC staging area in Bay City.

2) At Site Area or General Emergency, the State EOC will notify agencies, which compose the Emergency Management Council. However, only those agencies on the primary notification list will be requested to send representatives to the State EOC.

3) American Red Cross personnel will pre-stage at the ARC Chapter office in Bay City.

4) Matagorda County monitoring and decontamination personnel will pre-stage at the Environmental Health Department.

5) An extra dispatcher will be placed on duty at the Matagorda County Sheriff's office to handle the regular workload.

6) To allow for maximum amount of play, Joint Information Center staff will pre-stage in the Bay City area.

7) One (1) bus driver will be mobilized for the bus demonstration.

8) Two (2) law enforcement officers will be mobilized for the Traffic and Access Control Point demonstration (see statement at Objective 30).

Objective 2: Facilities - Equipment, Displays, and Work Environment

Demonstrate the adequacy of facilities, equipment, displays and other materials to support emergency operations.

Locations: BRC Operations at STP EOF; Joint Information Center (Bay City); BRC Staging Area (Bay City); Matagorda County EOC (Bay City); State EOC (Austin); Disaster District EOC (Pierce).

Extent of Play:

1) Regardless of the scenario, **no** facilities/activities will relocate during this exercise.

2) The BRC Mobile Laboratory and Emergency Response Vehicle (ERV) will be pre-staged because of the distance involved with driving the vehicle to Bay City.

3) To allow for the maximum amount of play, the set-up at the Joint Information Center will be pre-staged.

Objective 3: Direction and Control

Demonstrate the capability to direct and control emergency operations.

Locations: BRC Operations at STP EOF; BRC Staging Area (Bay City); Matagorda County EOC (Bay City); State EOC (Austin); Disaster District EOC (Pierce).

Objective 4: Communications

Demonstrate the capability to communicate with all appropriate emergency personnel at facilities and in the field.

Locations: BRC Operations at STP EOF; Joint Information Center (Bay City); BRC Staging Area (Bay City); BRC Mobile Laboratory (Bay City); BRC Field Monitoring Teams (Bay City); State Contamination Control Teams (Bay City); Matagorda County EOC (Bay City); McAllister Reception Center (Bay City); State EOC (Austin); Disaster District EOC (Pierce); Bus Driver Demonstration; Traffic and Access Control Demonstration.

Extent of Play:

1) A controller phone cell will be established to ensure appropriate communications are accomplished and to ensure fluid exercise play.

Objective 5: Emergency Worker Exposure Control

Demonstrate the capability to continuously monitor and control radiation exposure to emergency workers.

Locations: BRC Operations at STP EOF; BRC Staging Area (Bay City); BRC Mobile Laboratory (Bay City); BRC Field Monitoring Teams (Bay City); State Contamination Control Teams (Bay City); Matagorda County EOC (Bay City); McAllister Reception Center (Bay City).

Extent of play:

1) Access to anti-contamination clothing will be demonstrated; however, it will not be worn. Exercise participants will use gloves, as necessary.

2) The McAllister Reception Center monitoring and decontamination staff will only demonstrate the use of TLDs. Reception center monitoring and decontamination staff will not be issued Direct Reading Dosimetry (DRD).

Objective 6: Field Radiological Monitoring - Ambient Radiation Monitoring

Demonstrate the appropriate use of equipment and procedures for determining field radiation measurements.

Location: BRC Field Monitoring Teams (Bay City)

Extent of Play:

1) Four (4) Field Monitoring Teams will be deployed for training purposes. Only two teams will be evaluated.

2) Any attempts by Field Monitoring Teams to locate (and measure) areas of maximum exposure will be limited in compliance with BRC Procedure 7, Personnel Dosimetry and Exposure Control.

3) Use of anti-contamination clothing will be limited to gloves.

4) Equipment not required to demonstrate exercise objectives may be left at the staging area to allow for additional space within the vehicle.

5) Drill evaluators and controllers may be required to travel in separate vehicles due to space restrictions.

Objective 7: Plume Dose Projection

Demonstrate the capability to develop dose projections and protective action recommendations regarding evacuation and sheltering.

Location: BRC Operations at STP EOF

Extent of Play:

1) The protective actions that result from this decision making process will not be implemented. No member of the public will be relocated. Special populations will be addressed in Objective 15.

2) Areas Requiring Corrective Action (ARCA), Issue ID: 60-98-07-A-01, will be closed by training BRC Accident Assessment to aggressively follow-up with field sampling to verify dose projections. The objective will be demonstrated by BRC officials **after conclusion of the exercise** by a controller/player inject which will indicate that a Protective Action Guide (PAG) may be exceeded beyond the Emergency Planning Zone (EPZ) boundary.

Objective 8: Field Radiological Monitoring - Airborne Radioiodine and Particulate Activity Monitoring

Demonstrate the appropriate use of equipment and procedures for the measurement of airborne radioiodine concentrations as low as $1.0E^{-7}$ microcuries per cubic centimeter in the presence of noble gases and obtain samples of particulate activity in the airborne plume.

Location: BRC Field Monitoring Teams (Bay City)

Extent of Play:

1) Samples will be counted in the Mobile Laboratory, not by Field Monitoring Teams.

2) Activated charcoal filters will be used in lieu of Silver Zeolite filters for exercise purposes.

Objective 9: Plume Protective Action Decision Making

Demonstrate the capability to make timely and appropriate Protective Action Decisions (PADs).

Locations: Matagorda County EOC (Bay City); BRC Operations at STP EOF

Objective 10: Alert and Notification

Demonstrate the capability to promptly alert and notify the public within the 10-mile plume pathway emergency planning zone (EPZ) and disseminate instructional messages to the public on the basis of decisions by appropriate state or local officials.

Location: Matagorda County EOC (Bay City)

Extent of Play:

1) Siren and alert radio activation will be simulated.
2) Emergency Alert System (EAS) Messages will be sent to the EAS radio stations; however, broadcasts will be simulated.
3) Route alerting will not be demonstrated.
4) Community Alert Network (CAN) will not be demonstrated.

Objective 11: Public Instructions and Emergency Information

Demonstrate the capability to coordinate the formulation and dissemination of accurate information and instructions to the public.

Location: Matagorda County EOC (Bay City)

Extent of Play:

1) Messages will not be broadcast over commercial radio or television.

Objective 12: Emergency Information - Media

Demonstrate the capability to coordinate the development and dissemination of clear, accurate and timely information to the news media.

Location: Joint Information Center (Bay City)

Objective 13: Emergency Information - Rumor Control

Demonstrate the capability to establish and operate rumor control in a coordinated and timely manner.

Location: Joint Information Center (Bay City)

Extent of Play:

1) Four telephones will be staffed for this demonstration. A phone cell will inject rumors.

Objective 14: Implementation of Protection Actions - Use of KI for Emergency Workers, Institutionalized Individuals, and the General Public (State and Local)

Demonstrate the capability and resources to implement potassium iodide (KI) protective actions for emergency workers, institutionalized individuals, and, if the state plan specifies, the general public.

Locations: BRC Operations at STP EOF; BRC Staging Area (Bay City); Matagorda County EOC (Bay City)

Extent of Play:

1) Distribution of KI to emergency workers will be simulated by using copies of the Patient Packet Insert to represent actual KI supplies.

2) Actual ingestion of KI will be simulated by emergency workers.

3) The use of KI by the general public is not recommended in the State of Texas, and there are no institutionalized individuals within the STPEGS 10-mile EPZ; therefore, KI will not be issued to the general public or institutionalized individuals.

Objective 15: Implementation of Protective Actions – Special Populations

Demonstrate the capability and resources necessary to implement appropriate protective actions for special populations.

Location: Matagorda County EOC (Bay City)

Extent of Play:

1) Protective actions for special needs individuals will be considered at the County EOC; however, actual demonstration of protective actions will not be performed.

2) Matagorda County EOC staff will demonstrate this objective through discussion and showing the evaluator a roster of special needs individuals in the 10 mile emergency planning zone.

Objective 16: Implementation of Protective Actions - Schools

Demonstrate the capability and resources necessary to implement protective actions for school children within the plume pathway emergency planning zone (EPZ).

Location: Matagorda County EOC (Bay City)

Extent of Play:

1) Matagorda Independent School District will demonstrate implementation of protective actions for schools via telephone communications with the Matagorda County EOC, Transportation Coordinator. No students will be affected by the notifications.

2) A bus will travel to the County EOC for dosimetry issuance and the appropriate briefings. The bus will travel to a predetermined school for simulated student pick-up. The bus will then travel to a designated host school in Bay City and terminate its route. No students will be affected by the demonstration.

Objective 17: Traffic and Access Control

Demonstrate the organizational capability and resources necessary to control evacuation traffic flow and to control access to evacuated and sheltered areas.

Location: Matagorda County EOC (Bay City)

Extent of Play:

1) Law enforcement officers and BRC Contamination Control Teams will establish two Traffic and Access Control Points (see statement at objective 30).

2) In order to protect exercise participants, these Traffic and Access Control Points will be established at pre-selected off-road locations. Normal traffic will not be affected by control point operations.

3) A controller inject during the exercise will identify the two Traffic and Access Control Point locations. The controller inject will not interfere with the Traffic and Access Control Point decision making process.

Objective 18: Reception Center Monitoring, Decontamination, and Registration

Demonstrate the adequacy of procedures, facilities, equipment, and personnel for the radiological monitoring, decontamination, and registration of evacuees.

Location: McAllister Reception Center (Bay City)

Extent of Play:

1) Decontamination will be discussed if requested, but actual decontamination will not be performed.

2) Due to school in session, only a portion of the reception center will be activated during the exercise, including:

- Only one locker room (male area) will be activated for the demonstration.
- The emergency vehicle and bus pickup will not be activated.
- No evacuees will be transported to a Congregate Care facility.

Objective 19: Congregate Care

Demonstrate the adequacy of facilities, equipment, supplies, personnel, and procedures for congregate care of evacuees.

Location: McAllister Reception Center (Bay City)

Extent of Play:

1) The Congregate Care facility (St. Mark's Episcopal Church) activation will not be demonstrated; however, if requested, an American Red Cross official will walk evaluators through the facility to describe its setup and operating procedures.

Objective 22: Emergency Workers, Equipment, and Vehicles Monitoring and Decontamination

Demonstrate the adequacy of procedures for the monitoring and decontamination of emergency workers, equipment, and vehicles.

Location: McAllister Reception Center (Bay City)

Extent of Play:

1) Emergency workers use the same facilities as the general public. Demonstration of this activity is included in Objective 18.

2) Vehicle decontamination will be discussed if requested, but actual decontamination will not be performed.

Objective 25: Laboratory Operations

Demonstrate laboratory operations and procedures for measuring and analyzing samples.

Location: BRC Mobile Laboratory (Bay City)

Extent of Play:

1) Laboratory personnel will process samples collected by Field Monitoring Teams.

Objective 28: Relocation, Re-Entry, and Return - Decision Making

Demonstrate the capability to develop decisions on relocation, re-entry, and return.

Locations: BRC Operations at STP EOF; Matagorda County EOC (Bay City).

Extent of Play:

1) To be demonstrated via a tabletop discussion at the conclusion of the plume phase exercise and post drill critique.

2) The Chief of Field Operations/Recovery Manager will brief county, state, and federal officials on the PAGs developed. In addition, county, state, and federal officials will discuss relocation, re-entry, return and resource issues as they pertain to the evacuated zone(s).

Objective 29: Relocation, Re-Entry, and Return - Implementation

Demonstrate the capability to implement relocation, re-entry, and return.

Locations: BRC Operations at STP EOF; Matagorda County EOC (Bay City).

Extent of Play:

1) To be demonstrated via a tabletop discussion at the conclusion of the plume phase exercise and post drill critique.

2) The Chief of Field Operations/Recovery Manager will brief county, state, and federal officials on the PAGs developed. In addition, county state, and federal officials will discuss relocation, re-entry, return and resource issues as they pertain to the evacuated zone(s).

Objective 30: Continuous, 24-Hour Staffing

Demonstrate the capability to maintain staffing on a continuous, 24-hour basis through an actual shift change.

Locations: Joint Information Center (Bay City) BRC Contamination Control Teams (Bay City); BRC Mobile Laboratory (Bay City); BRC Operations at STP EOF; State EOC (Austin); McAllister Reception Center (Bay City)

Extent of Play:

1) Rather than deploying one team per shift, the Bureau of Radiation Control will use two (2) Contamination Control Teams for the entire exercise. The two Traffic and Access Control Points teams will meet the shift turnover requirement.

2) Turnover between key members of the Joint Information Center (Bay City) will occur between the Alert and Site Area Emergency Classification Level. The turnover will include utility, state and local spokespersons only.

3) Shift turnover for monitoring and decontamination operations will include:

   - one (1) supervisor
   - one (1) Station One emergency worker
   - one (1) Station Two emergency worker
   - one (1) Station Three emergency worker

4) Shift turnover for the American Red Cross will include:

   - one (1) Reception Center Manager
   - one (1) Registration Coordinator.

5) Due to the compressed exercise schedule the State EOC will make shift changes at other than normal times.

6) Shift change at the BRC Mobile Laboratory will occur by controller inject.

3.0 GUIDELINES

To define the scope and extent of participation by organizations and "participants", the following guidance is established to meet the objectives listed in Section 2.0 of the Exercise Manual.

A. GENERAL INFORMATION

1. The exercise will be conducted on October 18, 2000. Exercise participants will not possess prior knowledge of the Exercise sequence of events, and will follow normal daily activities the day of the Exercise until notified of abnormal conditions as directed by 0ERP01-ZV-IN03, "Emergency Response Organization Notification".

2. The Control Room staff will operate from the STPEGS Simulator located in the Nuclear Training Facility. Prior to the start of the Exercise a shift briefing will be conducted, for the operating crew, covering initial conditions and conduct of the Exercise. Plant Operators, participating in the Exercise, will be dispatched to the plant with controllers to take the place of on-shift plant operators for Exercise purposes only. Communication systems in the Simulator will be cross-connected with the rest of the plant.

3. The Exercise will commence with a postulated condition necessitating the declaration of an emergency classification and escalate to require further emergency classification declarations.

4. Exercise participants will perform, as required, radiological monitoring and dose assessment activities as identified in the Section 2.0 Objectives. Radiological field monitoring teams will be dispatched in order to evaluate response time, communications and monitoring procedures.

5. As Exercise conditions warrant the following onsite participants and facilities will be staffed and activated, the Onshift Emergency Organization (Normal shift personnel), Technical Support Center, Operations Support Center, Emergency Operations Facility (Blue team Emergency Response personnel).

6. The Joint Information Center will be staffed and activated. Offsite participants from STPEGS will be pre-staged at the Joint Information Center to allow for the maximum amount of play. Participation by members of the news media will be simulated. News bulletins will be made which depict simulated Exercise events. However, no Exercise press bulletins will be made to the public.

7. Operational and Radiological data are generated by the simulator which is cross connected to the Technical Support Center, Operations Support Center (41' RCA access control), and the Emergency Operations Facility to simulate ICS and RM-11 systems currently installed in those areas.

B. PLANT / PERSONNEL SAFETY

1. Personnel will NOT manipulate any plant equipment (valves, breakers, controls) in response to the Exercise, except for equipment mock-ups or components specifically agreed upon by management before hand (for example, PASS samples).

2. Personnel will NOT take any actions that jeopardize personnel safety. Take immediate action to restore safe operation if an unsafe condition exists.

3. Personnel will NOT enter any areas which are contaminated, potentially contaminated, airborne or high radiation areas. ALARA practices will be maintained during the Exercise.

4. Actions that would jeopardize the operation of the units, will not be taken.

5. Actions that would violate permit requirements such as Breach / Impairment of Fire Barriers (block open Fire or Security Doors), Breach of Control Room HVAC Envelope, or violation of Radiation Work Permits etc., will not be taken.

6. In the event an actual emergency occurs during the conduct of the Exercise, personnel are to notify the Control Room using ext. 911. Then, as soon as possible, notify the lead controller in your facility or the Exercise Coordinator.

    a. In the event of an actual fire report, the operating shift will provide the initial response.

    b. In the case of an actual medical emergency, the operating shift will provide the initial response until relieved.

    c. Qualified Exercise participants and controllers can be directed to support the real Shift Supervisor in response to the actual emergency.

    d. The Exercise Coordinator will control time out activities in the facilities due to the real emergency, and determine if suspension or termination of the Exercise is required.

7. If the decision is made to suspend the Exercise, any and all communications links will be used to notify the appropriate personnel of the real emergency.

8. The Lead Controller in each facility will be advised if any unsafe condition exists.

9. Exercise personnel will observe all radiological controls. All personnel who enter the RCA must have the appropriate radiation worker qualifications.

10. Controllers will specify any actions that are to be simulated.

C. COMMUNICATIONS / NOTIFICATIONS

1. All radio and telephone communications will be preceded and followed by the phrase " THIS IS A DRILL ".

2. All required notifications will be made to:

   a. The NRC using the "Emergency Communications Directory." In the simulator, Emergency Response Data System (ERDS) activation will be simulated.

   b. The State and County will be notified via the "Exercise Emergency Communications Directory.". The notification form will be faxed to all locations using the broadcast mode, including the onsite Phone Cell. Any Exercise documentation transmitted via facsimile machine will have the word "Drill" stamped on them prior to transmittal

3. Use of plant Alarms (Fire Alarm, Assembly and Accountability) will be preceded by announcing "THIS IS A DRILL" over the plant PA.

4. Calls to outside vendors will be made for initial contact. No services will be requested. Participants will clarify that the notification is for "Drill Only" and no work or service is being requested. If the vendor is willing to provide information, the necessary information will be obtained such as response capability, response time, delivery time and cost.

5. Other calls for offsite assistance will be made as specified in the "Exercise Emergency Communications Directory."

D. PLANT ACTIVITIES

1. All actions will be performed as realistically as possible. Emergency teams will be dispatched in accordance with procedures and a controller will be with the teams. Actions required by Plant Operating Procedures and Emergency Plan Implementing Procedures will be carried out to the extent possible, unless otherwise directed by the Exercise controllers.

2. Assume all systems function as designed unless told otherwise by control messages or a controller.

3. Only information provided in the scenario will be used.

   a. Controllers will provide data in the location the information would normally be available (e.g. RM-11 data available at MEAB 41' RCA Access Control Point).

   b. If a failure of the Simulator occurs, and the Simulator can not be recovered in a reasonable period of time, backup data sheets will be available and posted in appropriate locations. Selected parameters and readings will be provided. The selected information will be

sufficient to make the necessary decisions or action required by Exercise participants.

c. There will be an Exercise controller at each defined location. Controllers will provide information and clarification of data to keep the Exercise progressing in accordance with the scenario. Since all possible participant reactions to the simulated Exercise events can not be anticipated, individual Controllers may initiate simulated situations to preserve the continuity of the overall scenario timeline without prior approval of the Lead Controller. However, individuals are prohibited from creating real or simulated situations which are not provided for in the scenario package and may affect the timeline without prior approval of the Lead Controller.

4. Exercise participants will respond to all scenario events as if they were real unless directed otherwise by a controller.

5. Exercise Tag outs will not be hung in the operating plant. Tag outs will be posted in the simulator.

6. Equipment and tools normally used to do a job will be obtained and brought to the work location unless it poses a safety hazard to the plant or participants.

7. All required repair parts should be located and obtained in the warehouse, unless directed otherwise by a Exercise controller.

8. Mockups of equipment and/or areas may be established to simulate actual equipment and/or inaccessible areas. Participant actions in these simulated areas will be performed as if these conditions actually existed.

9. If samples are deemed necessary they will actually be collected and their analysis conducted unless otherwise directed by a controller. If a decision is made to use the Post Accident Sampling System (PASS) those sampling activities will be simulated from the PASS room.

10. Controllers will specify during the course of the Exercise any actions that are to be simulated. For example, if the decision to issue Potassium Iodide (KI) is made onsite, all preparations will be conducted, however personnel will not ingest KI.

11. Portable fire extinguishers or other sealed canisters will not have the seals broken or safety pins removed in response to the postulated scenario events, except when specifically required by instructions provided in the scenario package.

12. The use of protective clothing will may be simulated by the Exercise participants in the plant.

13. The Offsite Field Monitoring teams, so as not to unnecessarily alarm members of the general public, will simulate the use of protective clothing.

14. SCBA's will be donned, as required by the scenario conditions, however, after initial fitting on the face, the SCBAs may be removed for safety considerations.

15. The use of silver zeolite cartridges when taking air samples will be simulated. Charcoal cartridges will be provided by the Exercise controllers for use in the air samplers.

E. ASSEMBLY AND ACCOUNTABILITY

1. If assembly and accountability is ordered, it will be conducted in accordance with 0ERP01-ZV-IN04 and site non-essential personnel will be assembled in designated assembly areas. Once accountability procedures have been completed, a page announcement will allow the assembled personnel to return to their normal workstations.

2. Site evacuation will be simulated.

F. DOCUMENTATION

1. Emergency plan action logs and procedure checklists will be used by participants to record events during the Exercise. These should be collected by the appropriate administrative personnel at the end of the Exercise and turned over to the Facility Lead Controller.

4.1 Narrative Summary

Initial conditions consist of Unit 1 at 100 % power, Charlie Train outage with the Containment Spray Pump 1C Discharge Valve out of service for Preventative Maintenance. Other equipment out of service includes Spent Fuel cooling pump 1B is tagged out for maintenance. A small feedwater leak inside containment has been identified during a containment entry. Maintenance is preparing to go in later today to repair the leaking valve. Work is in progress on repairing the RCB Personnel Airlock door seal. Supplementary containment purge is running to ventilate the RCB. Workers are preparing to unload a Reactor Coolant Pump motor in the Unit 1 Fuel Handling Building truck bay. Unit 2 is shut down for a refueling maintenance outage with its fuel off loaded to the spent fuel pool. Meteorological conditions include the wind out of the East (70 degrees) at 6-8 mph. Current temperature is 73 degrees with a high expected near 97.

Emergency Cooling Water pump 1B trips due to a short in the motor. The pump breaker received a trip signal on the over current relay; the breaker fails to open. The 4160 Volt ESF bus E1B normal supply breaker trips open due to an over current condition on the bus, and de energizes the bus. The Standby Diesel Generator # 12 starts but due to a lock out condition on the 4160 volt ESF bus E1B, fails to close on the bus. Operator action requires securing the standby diesel generator due to the loss of ECW pump 1B. While backing into the FHB truck bay the truck strikes the FHB door and damages the door. An **Alert** is declared based upon HA 4 Vehicle crash affecting a vital area. Activation of Emergency Response Facilities begins. Maintenance teams are dispatched to assess the problem in the 4160 VAC bus and the Standby Diesel Generator output breaker. Due to the loss of 4.16 kV bus E1B the 480 volt MCC E1B1 which powers MOV-0005 Inboard Supplemental Purge valve is de-energized the valve fails to close.

Annunciator C5 on Panel C005 "Rod Cont Non Urgent Alarm" is received. The Control Room directs the EAB Plant Operator to investigate. Suddenly Power Cabinet A loses power causing loss of latch current to all twelve CRDMs powered from A. Group 2 rods in SD bank A and rods in control banks A and C powered from Power Cabinet 2AC drop into the core. Immediate actions require the operators to scram the reactor. The manual shutdown scram switch does not scram the reactor, and opening the 1K1 and 1L1 power supply breakers does not open the breakers. This is caused by failure of both the under-voltage and the shunt relays to open the reactor trip breakers. The control room notifies the EAB Watch to locally open the supply breaker to the Rod Drive MG sets. The dropped rods cause a flux tilt in the core, and with a failure of the turbine to trip, causes a decrease in RCS average temperature which causes an over power condition in part of the core. The EAB watch is able to reach the Rod Drive MG sets on the 60 ft. MAB elevation and open the supply breakers causing the rest of the rods to be inserted. All the rods are inserted, however Rod M12 CB D GRP1 is ejected from the core and a LOCA inside containment starts. Due to the flux tilt in the core and the localized hot spots, clad damage is sustained in parts of the core. When the reactor trips indications of not all rods on the bottom are received. Rod M12 CB D GRP1 does not show a rod bottom light. A rod ejection accident has occurred and caused further fuel-clad degradation at the time of the ejection. Supplemental

Purge outboard isolation valve FV-9777 is closed. The inboard Motor Operated Valve stays open due to the loss of Bravo Train power.

This event meets the criteria for a declaration of a **Site Area Emergency** based upon SS2, "Failure of Reactor Protection System Instrumentation to Complete or Initiate an Automatic Reactor Trip Once a Reactor Protection System Setpoint has been exceeded and manual reactor trip was not successful."

Indications of low pressurizer level, increasing containment pressure, temperature, along with sump levels and containment activity gives an indication of a loss of coolant accident. Pressurizer level and pressure decrease. The only available centrifugal charging pump can not keep up with the leak rate. Pressurizer water level continues to decrease, the leak rate is approximately 1000 gpm and Pressurizer pressure decreases to the Safety Injection Setpoint. Safety Injection pumps will maintain the vessel inventory sufficiently high to prevent further core damage. Due to the LOCA, Containment pressure increases quickly, and when it reaches 9 psig the Containment Spray pumps start in train 'A'. Train 'C' Containment Spray Discharge Isolation Valve MOV-0001C is still tagged out for maintenance and it becomes a priority job to return the valve to service.

The Rod ejection LOCA into containment combined with approximately 6 % clad damage causes radiation levels to trend up inside containment. Reactor Containment Radiation Monitors RT-8050 and RT-8051 trend up to 1000 R/hr. This meets the criteria for a declaration of a **General Emergency** based upon RG2 Unexpected increase in Containment radiation. Protective Action Recommendations are made offsite. The running Containment Spray pump 1A suddenly seizes up due to a bad pump bearing which leaves no Containment Spray pumps running. Containment pressure again increases past 9 pounds.

The high sustained containment pressure causes the Supplementary Purge Exhaust outboard valve to open. Vent monitors RT-8012 and RT-8013 start to trend up and then RT-8010A and RT-8010B Unit Vent Stack monitors alarm, indicating a radioactive release is in progress out the main vent. Field monitoring teams detect the plume and track its down wind progress. Maintenance teams are able to restore the Charlie Train Containment Spray discharge valve. This causes Containment Pressure to start decreasing.

Repair and restoration of important components including the return to service of Containment Spray Pump 1C and the return of the E1B 4160 V ESF bus can terminate the radioactive release. This would allow two containment spray pumps to rapidly reduce the pressure inside containment to reduce the driving force behind the release. Restoration of E1B 4160 V ESF bus will allow 480 V bus E1B1 to be re-energized so that the inboard Supplementary Purge Valve can be shut stopping the release.

4.2 Initial Conditions

Unit 1 at 100 % power for the last 180 days and is in the middle of life for the current core load. Thermal power is 3800 MWt and core life is 10,000 MWD/MTU. Supplementary Purge is in service for ALARA concerns. Met conditions include the wind out of the East (70 degrees) at 6-8miles per hour. Current temperature is 73 degrees, with a high temperature expected near 97 degrees. Train "C" Containment Spray system is removed from service for maintenance. The following equipment is out of service in Unit 1:

1. "C" train Containment Spray is out of service for pre-planned maintenance. Containment Spray pump 1C tagged out and its Discharge Valve MOV-0001C is out of service for Maintenance. Return to service required by 10/23/2000 0300 hours or a Unit shutdown will be required. All other required train equipment is operable.

2. Fuel Handling Truck Bay doors are open to support delivery of a Reactor Coolant Pump motor.

3. Spent Fuel Pool cooling pump 1B tagged out for maintenance, replacement of wearing rings.

4. Personnel Airlock door seal replacement in progress on MAB side door.

Planned activities- support scheduled maintenance and surveillance activities in Unit 1

Unit 2 is shutdown for a Refueling Outage and its fuel off loaded to the spent fuel pool. Planned activities- support scheduled maintenance and surveillance activities for day 15 of the scheduled 35 day outage.

4.3 INITIAL METEOROLOGICAL CONDITIONS

ZCZC SATZFPHGX
TTAA00 KHOU 250854

SOUTHEAST TEXAS ZONE FORECASTS
NATIONAL WEATHER SERVICE HOUSTON/GALVESTON TX.
0600 AM CDT WED Oct 18, 2000

TXZ214-235>238-252100
BRAZORIA - CHAMBERS - GALVESTON - JACKSON - MATAGORDA
INCLUDING THE CITIES OF...ANGLETON...PEARLAND...BAY CITY...
EDNA...TEXAS CITY...GALVESTON
0600 AM CDT WED Oct 18, 2000

TODAY...PARTLY CLOUDY AND HOT HIGHS IN THE MID 90S COAST TO THE UPPER 90S INLAND. EAST WINDS 6 TO 10 MPH. BECOMING MORE SOUTHERLY LATER THIS AFTERNOON.
TONIGHT...PARTLY CLOUDY WITH A 20 PERCENT CHANCE OF SHOWERS. LOWS NEAR 75 COAST TO THE MID 80S INLAND. SOUTH WINDS NEAR 10 MPH.
FRIDAY...MOSTLY CLOUDY AND WARM WITH A 30 PERCENT CHANCE OF SHOWERS OR THUNDERSTORMS. HIGHS IN THE LOWER 90S COAST TO LOWER 90S INLAND. SOUTH WINDS 10 TO 15 MPH.

EXTENDED FORECAST...
SATURDAY...CONTINUED CLOUDY WITH A CHANCE OF RAIN. HIGHS IN THE MID 90s SLIGHTLY COOLER ON THE COAST. EAST WIND GUSTING TO 15 MPH
SUNDAY...DECREASING CLOUDS. LOWS IN THE 70s HIGHS IN THE 90s.

NNNN

4.3 METEOROLOGICAL CONDITIONS

ZCZC SATZFPHGX
TTAA00 KHOU 250854

SOUTHEAST TEXAS ZONE FORECASTS
NATIONAL WEATHER SERVICE HOUSTON/GALVESTON TX.
0930 AM CDT WED Oct 18, 2000

TXZ214-235)238-022200-
BRAZORIA - CHAMBERS - GALVESTON - JACKSON - MATAGORDA
INCLUDING THE CITIES OF...ANGLETON...PEARLAND...BAY CITY...
EDNA...TEXAS CITY...GALVESTON
0930 AM CDT WED Oct 18, 2000

TODAY...PARTLY CLOUDY AND HOT HIGHS IN THE MID 90S COAST TO THE UPPER 90S INLAND. EAST WINDS 6 TO 10 MPH.

TONIGHT...PARTLY CLOUDY WITH A 20 PERCENT CHANCE OF SHOWERS. LOWS NEAR 75 COAST TO THE MID 80S INLAND. SOUTH WINDS NEAR 10 MPH.
THURSDAY...MOSTLY CLOUDY AND WARM WITH A 30 PERCENT CHANCE OF SHOWERS OR THUNDERSTORMS. HIGHS IN THE LOWER 90S COAST TO LOWER 90S INLAND. SOUTH WINDS 10 TO 15 MPH.

EXTENDED FORECAST...
FRIDAY...CONTINUED CLOUDY WITH A CHANCE OF RAIN. HIGHS IN THE MID 90s SLIGHTLY COOLER ON THE COAST. EAST WIND GUSTING TO 15 MPH
SATURDAY...DECREASING CLOUDS. LOWS IN THE 70s HIGHS IN THE 90s.

NNNN

4.3 METEOROLOGICAL CONDITIONS

ZCZC SATZFPHGX
TTAA00 KHOU 250854

SOUTHEAST TEXAS ZONE FORECASTS
NATIONAL WEATHER SERVICE HOUSTON/GALVESTON TX.
1000 AM CDT WED Oct 18, 2000

TXZ214-235)238-022200-
BRAZORIA - CHAMBERS - GALVESTON - JACKSON - MATAGORDA
INCLUDING THE CITIES OF...ANGLETON...PEARLAND...BAY CITY...
EDNA...TEXAS CITY...GALVESTON
1000 AM CDT WED Oct 18, 2000

TODAY...PARTLY CLOUDY AND HOT HIGHS IN THE MID 90S COAST TO THE UPPER 90S INLAND. EAST WINDS 6 TO 10 MPH.

TONIGHT...PARTLY CLOUDY WITH A 20 PERCENT CHANCE OF SHOWERS. LOWS NEAR 75 COAST TO THE MID 80S INLAND. SOUTH WINDS NEAR 10 MPH.
THURSDAY...MOSTLY CLOUDY AND WARM WITH A 30 PERCENT CHANCE OF SHOWERS OR THUNDERSTORMS. HIGHS IN THE LOWER 90S COAST TO LOWER 90S INLAND. SOUTH WINDS 10 TO 15 MPH.

NNNN

4.4 2000 Graded Exercise Timeline

TIME	SEQUENCE OF EVENTS	MESSAGE
07:00	Initial Conditions - Unit 1 is at 100 % power, Spent Fuel Cooling pump 1B tagged out for maintenance. The RCB personnel airlock door seal is being replaced on the MAB side door. Supplementary Containment Purge is in service to support future maintenance activities. Train "C" Containment Spray tagged out for maintenance. Fuel Handling Building doors are open supporting a delivery of a RCP motor. Meteorological conditions include Winds from 70° at 6 to 8 mph current temperature 73°.	1
	Refer to Supplemental Scenario # 1, 2, 10 and 11.	
07:30	During transport of a refurbished Reactor Coolant Pump Motor into Unit 1 FHB, the tractor trailer crashes into the FHB truck bay door damaging the door.	2
	Refer to Supplemental Scenario #2.	
07:45	An **Alert** is declared based upon HA4, Emergency Action Level 5, Vehicle crash affecting a Plant Vital Area. Activation of Emergency Response Facilities begins. (Performance Indicator)	3C, 5
07:50	The simulator control room receives indications that the normal supply breaker for the 4160 Volt bus E1B has tripped with a lock out condition on the bus, preventing the standby diesel generator from powering the bus. EAB watch is dispatched to check on E1B Switchgear.	4
	Refer to Supplemental Scenario # 6.	
08:00	State and county authorities are notified of the Alert declaration. (Performance Indicator)	
08:10	Personnel arrive at Emergency Operations Facility, Technical Support Center, and Operations Support Center to activate facilities.	
~08:15	Team dispatched to investigate lock-out on E1B buss	6
	Refer to Supplemental Scenario #6.	

4.4 2000 Graded Exercise Timeline

TIME	SEQUENCE OF EVENTS	MESSAGE
~08:30	Repair efforts to FHB truck bay door continue	7
	Refer to Supplemental Scenario #2.	
09:00	Rod Cont Non-Urgent Alarm is received and the Control Room directs the EAB watch to investigate. Suddenly Group 2 rods in shut down bank "A" and rods in control banks "A" and "C" powered from Power Cabinet 2AC drop into the core. While attempting to scram the reactor an ATWS occurs. The Reactor trip breakers are opened at the Reactor trip switchgear causing the rest of the rods to be inserted. A Rod ejection accident occurs simultaneously and causes fuel clad damage at the time of the ejection. A LOCA inside containment starts.	8, 9
	Refer to Supplemental Scenarios # 4 & #7.	
09:05	Indications of decreasing Pressurizer level, increasing containment pressure, temperature, and humidity along with increasing sump levels and containment activity gives an indication of a loss of coolant accident When Pressurizer pressure reaches the Safety Injection set point, safety injection is initiated and the SI pumps maintain Pressurizer level. MOV-0005 fails to close due to loss of power.	
	Refer to Supplemental Scenario # 3.	
09:10	When Containment pressure reaches nine lbs. Containment Spray pump 1A is the only containment spray pump that starts. Work continues on Containment Spray pump 1C discharge valve.	10
09:15	Meets the criteria for a declaration of a **Site Area Emergency** based upon SS2 Failure of Reactor Protection System Instrumentation to complete or initiate an automatic reactor trip once a reactor protection system set point has been exceeded and manual reactor trip was not successful from the Control Room. (Performance Indicator)	11C
09:30	The State and County authorities are notified of the Site Area Emergency Declaration. (Performance Indicator)	

4.4 2000 Graded Exercise Timeline

TIME	SEQUENCE OF EVENTS	MESSAGE
~09:35	Assembly and Accountability is completed.	**12**
09:45	Containment Spray Pump 1A seizes up and stops running.	**13**
	Refer to Supplemental Scenario #5.	
10:30	Due to the LOCA in containment, radiation monitors RT-8050 & 8051 indicate does rates greater than 1,000 R/hr.	
10:45	Meets the criteria for a declaration of a **General Emergency** based upon RG2 Valid reading on RT-8050 or 8051 greater than 1,000 R/hr. (Performance Indicator)	**14C**
10:50	Protective Action Recommendations are made offsite based upon projected offsite dose rates. (Performance Indicator)	
10:55	An injured man is reported from in the field. A team member working on 1B ECW has slipped and fallen knocking himself unconscious	**15**
	Refer to Supplemental Scenario #9	
11:00	The State and County authorities are notified of the General Emergency Declaration. (Performance Indicator)	
11:30	Increasing Containment pressure causes a failure of the outboard supplementary purge valve FV-9777 actuator and causes the valve to open off its seating surface and results in a radioactive release. Unit vent monitors indicate a radioactive release is in progress out the main vent.	**16**
	Refer to Supplemental Scenario # 8.	
11:35	Field monitoring teams search for the plume to track its down wind progress.	
~11:45	Site ambulance leaves for Matagorda General Hospital with injured man.	**17**
12:45	Radioactive release is terminated when the 4160 V ESF bus E1B is re-energized which allows 480 V bus E1B1to be energized to	**18**

4.4 2000 Graded Exercise Timeline

TIME	SEQUENCE OF EVENTS	MESSAGE
	close the inboard Supplementary purge isolation valve MOV-0005. Containment Spray pump 1C is released for return to service.	
	Refer to Supplemental Scenario # 10.	
13:00	Release is terminated, efforts continue to track the plume with offsite field teams.	
14:00	Drill is terminated.	**19**
~15:30	Reconvene with State and County for Recovery Reentry Seminar	**20**

4.5 SITE MESSAGES

THIS IS A DRILL

MESSAGE NO: 1 Page 1 of 1

TO: All Facilities

FROM: Lead Controller

LOCATION: All Facilities

TIME: 07:00

MESSAGE: Initial Conditions

Unit 1 at 100 % power for the last 180 days and is in the middle of life for the current core load. Thermal power is 3800 MWt and core life is 10,000MWD/MTU. Supplementary Purge is in service. Meteorological conditions include Wind out of 70 degrees at 6 to 8 mph current temperature 73 degrees. The following equipment is out of service in Unit 1:

1. "C" train Containment Spray is out of service for maintenance. Containment Spray pump 1C tagged out and its Discharge Valve MOV-0001C is out of service for maintenance. Return to service required by 10/23/00 @ 03:00 hours or a Unit shutdown will be required. All other required train equipment is operable.

2. Spent Fuel Cooling Pump 1B tagged out for maintenance, replacement of pump wearing rings.

3. Reactor Coolant Pump delivery to the FHB truck bay, work in progress, truck bay doors are open.

4. Personnel Airlock door seal replacement in progress on the MAB door.

5. Planned activities- support scheduled maintenance and surveillance activities in Unit 1

Unit 2 is shutdown for a Refueling Outage and its fuel off loaded to the spent fuel pool.

Planned activities- support scheduled maintenance and surveillance activities for day 15 of the scheduled 35 day outage.

THIS IS A DRILL

4.5 SITE MESSAGES

THIS IS A DRILL

MESSAGE NO: 2 Page 1 of 1

THIS IS A DRILL

TO: Simulator Control Room

FROM: Worker supporting the FHB RCP off load evolution.

LOCATION: FHB Truck Bay Area work in progress

TIME: 07:30

MESSAGE: The driver of the flatbed truck has crashed into the FHB truck bay door causing it to be damaged. The damage consists of a large crease (4-5 feet in length) in the door at truck bumper level. The door will not close properly.

Controller note:

See supplemental scenario No. 2 for further information.

THIS IS A DRILL

THIS IS A DRILL

MESSAGE NO: 3C Page 1 of 1

TO: Shift Supervisor / Emergency Director

FROM: Simulator Lead Controller

LOCATION: Simulator Control Room

TIME: After 07:45

You have met the conditions to declare a **Alert** based upon HA-4 EAL 5 Vehicle Crash affecting a Vital Area.

Controller Note: Contact the Drill Coordinator prior to issuing this contingency message.

THIS IS A DRILL

THIS IS A DRILL

MESSAGE NO: 4 Page 1 of 1

TO: Control Room

FROM: PO Controller/Maintenance Controller

LOCATION: E1B Switchgear

TIME: When dispatched after 0750.

MESSAGE: This is a Drill

E1B bus over current relay indicates it operated. Trouble shooting will find:
ECW pump 1B over current relay is flagged.

If ECW pump 1B is meggered test indicates the motor stator coil is shorted. (Maintenance team at pump motor only when proper steps are followed.)

The ECW 1B breaker is still closed and must be manually opened from the breaker cubicle.

Buss E1B over current is flagged indicating the buss is tripped. The 86 lock out relay will not reset when it is attempted to be reset, requiring the 86 relay to be replaced with a new one. Replacement will be completed at 1245 and the buss may then be re-energized.

Controller Note:

See Supplemental scenario No. 6 for further information

THIS IS A DRILL

THIS IS A DRILL

MESSAGE NO: 5 Page 1 of 1

TO: Alarm Station Operator

FROM: Security Controller

LOCATION: West Gatehouse

TIME: When activating ENRS for the ALERT

MESSAGE: This is a Drill

An **ALERT** has been declared. Activate the ENRS with scenario number **25** (Drill Alert Blue Team)

THIS IS A DRILL

MESSAGE NO: 6

Page 1 of 1

TO: Repair Team

FROM: OSC Controller

LOCATION: 4160 VAC ESF Train "B" Switchgear Room

TIME: After 07:50

MESSAGE: This is a Drill

Controller Note:

See Supplemental Scenario No. 6 for further information

MESSAGE NO: 7

TO: Repair Team

FROM: OSC Controller

LOCATION: FHB Truck Bay door

TIME: 08:30

MESSAGE: This is a Drill

Controller note:

Repair efforts continue on FHB truck bay door. Completion of this task is not critical to the scenario timeline. Refer to Supplemental Scenario No. 2 for further details.

THIS IS A DRILL

MESSAGE NO: 8

TO: OSC Repair Team

FROM: OSC Controller

LOCATION: Electrical Auxiliary Building

TIME: After 09:00

MESSAGE: This is a Drill

Controller Information:

Team may be formed and dispatched to investigate the cause of loss of power to 2AC, power supply for the control rods. This information would come from the simulator control room if the team was dispatched there.

Player Information:

Group 2 rods in Shutdown bank "A" and control banks "A" and "C" Drop.

Controller Note:

See Supplemental scenario No. 7 for more information.

THIS IS A DRILL

THIS IS A DRILL

MESSAGE NO: 9

Page 1 of 1

TO: Repair Team

FROM: OSC Controller

LOCATION: 1K1 Breaker 29' TGB

TIME: After dispatched to breaker

MESSAGE: This is a Drill

Controller note:

Refer to Supplemental Scenario No. 4 for further information.

THIS IS A DRILL

MESSAGE NO: 10

TO: OSC Repair Team

FROM: OSC Controller

LOCATION: Fuel Handling Building

TIME: When requested

MESSAGE: This is a Drill

Controller Information:

For the purposes of this scenario, the work package is complete with exception of the Completion Testing (Section 5.9 of the PMI-EM-ZE-0312 procedure) and the Post Maintenance Testing Section 3.03 and 3.04 of the Work Instructions.

The verbal turnover for shift change indicates that the Limitorque is complete to step 5.8.3 of PMI-EM-ZE-0312 Limitorque MOV Actuator Lubrication.

Player Information:

When the package is checked the step 5.8.3 is not signed off and an effort is being made to contact the individual that was performing the work. A local inspection of the valve reveals that the manual hand wheel has not been installed on the valve, but everything else appears to be in order

Controller Note:
See Supplemental scenario No. 10 for more information.

THIS IS A DRILL

THIS IS A DRILL

MESSAGE NO: 11C

Page 1 of 1

TO: Emergency Director

FROM: Facility Lead Controller

LOCATION: Technical Support Center / Emergency Operations Facility

TIME: After 09:15

You have met the conditions to declare a **Site Area Emergency** based upon SS 2 Failure of Reactor Protection System Instrumentation to complete or initiate an automatic reactor trip once a reactor protection set point has been exceeded and manual reactor trip was not successful.

Controller Note: Contact the Drill Coordinator prior to issuing this contingency message.

THIS IS A DRILL

THIS IS A DRILL

MESSAGE NO: 12 Page 1 of 1

TO: TSC Manager

FROM: TSC Controller

LOCATION: Technical Support Center

TIME: After Assembly and Accountability is complete ≈09:35

MESSAGE: This is a Drill

Controller Note: Direct the Assistant TSC Manager to read the following message over the plant PA system.

Attention, Attention, all assembled plant personnel that have been identified as non-exercise players are now released to return to your normal work location. Please disregard any further Drill announcements which may be heard over the plant public address system.

MESSAGE NO: 13 Page 1 of 1

TO: PO / OSC Maintenance Team

THIS IS A DRILL

4.5 SITE MESSAGES

THIS IS A DRILL

FROM: Plant Operator/OSC Controller

LOCATION: EAB 10' elevation

TIME: After 09:45

MESSAGE: This is a Drill

Plant Operator Information

Containment Spray Pump 1A, cubicle 10 on 4160 VAC Bus E1A shows the following indications;

Breaker control flag indicates tripped, Ammeter reading zero amps.
If the breaker control is reset, when the breaker is attempted to be closed locally it trips open.

OSC Maintenance Team Information

Breaker panel inspection on Cubicle 10 indicates an overcurrent condition that can't be cleared If dispatched to the pump itself in the Fuel Handling Bldg. The pump motor is overheated and if attempted the pump shaft can't be rotated.

Controller Note: The Containment Spray Pump 1A has seized in its casing and won't be returned to service during this exercise. See Supplemental scenario No. 5 for further information.

THIS IS A DRILL

THIS IS A DRILL

MESSAGE NO: 14C

TO: Emergency Director

FROM: Lead Controller

LOCATION: Emergency Operations Facility

TIME: After 10:45

MESSAGE: This is a Drill

If you not already done so then declare a **General Emergency** based on RG2 Unexpected increase in containment radiation. Valid reading on RT-8050 or 8051 greater than 1.0E03

Controller note:

Contact the Drill Coordinator prior to issuing this contingency message.

THIS IS A DRILL

THIS IS A DRILL

MESSAGE NO: 15 Page 1 of 1

TO: First Responders/Members of repair team

FROM: Medical Scene Controller

LOCATION: ECW Intake structure E1B bay.

TIME: After 10:55

MESSAGE: Injured man status

Player Information

You see an individual slip and fall by the ECW 1B Pump. The individual appears to be unconscious.

This is a Drill, This is a Drill, This is (your name), I want to report a Medical Emergency in the (location currently at). (victim's name) has passed out, banged his head, and is unconscious, I do not see any bleeding. Send help right away. This is a Drill, This is a Drill.

Controller note:

Consult Supplemental Scenario No. 9 for further medical conditions of the victim.

THIS IS A DRILL

THIS IS A DRILL

MESSAGE NO: 16 Page 1 of 1

TO: Plant Operator/OSC Maintenance team

FROM: Plant Operator /OSC Controller

LOCATION: MAB 68' elevation

TIME: After 11:30

MESSAGE: This is a Drill

Controller Note:

Outboard Containment Supplementary Purge Isolation valve starts leaking by its seat. The Unit Vent monitors RT-8012 and RT-8013 start to increase followed by RT-8010A and RT-8010B. When a team is dispatched to investigate the increase in vent monitor readings give them the following information:

RPO Information

Local indications that the valve appears to be slightly off its closed seat. If they attempt to put a wrench on the valve stem it is bound up and won't move.

OSC Maintenance Team Information

When the inspection cover is removed it is discovered that one linkage arm has become detached from the stem adapter pin and is jammed preventing the full closure of the valve.

See Supplemental Scenario No. 8 for more information.

THIS IS A DRILL

THIS IS A DRILL

MESSAGE NO: 17

Page 1 of 1

TO: Security

FROM: Medical/Security Controller

LOCATION: East Gatehouse

TIME: ~11:45

MESSAGE: This is a Drill

The site Ambulance has cleared the East Gatehouse, the injured individual is in route to Matagorda General Hospital.

Controller Note:

Give this message to Security Force Supervisor when the patient is simulated loaded into the Site Ambulance.

MESSAGE NO: 18

TO: OSC Repair Team

FROM: OSC Repair Team Controller

LOCATION: EAB 35' elevation

TIME: 12:45

MESSAGE: This is a Drill

Repairs have been completed and the 4160 V AC bus E1B is ready to be placed back in service.

Controller note:

See Supplemental Scenario No. 6 for further information.

THIS IS A DRILL

MESSAGE NO: 19

Page 1 of 1

TO: All Facilities

FROM: Lead Controller

LOCATION: TSC /EOF

TIME: When directed by Drill Coordinator (After 14:00)

MESSAGE: This is a Drill

The Drill is now terminated. Please organize the documentation generated by this drill and fill out an Emergency Response Suggestion form if appropriate. There will be a brief critique in each facility.

THIS IS A DRILL

MESSAGE NO: 20

TO: Facility Managers

FROM: Lead Controller

LOCATION: TSC /EOF

TIME: When directed by Drill Coordinator (~1530)

MESSAGE: This is a Drill

Following the exercise and the exercise critique, select STPNOC members of the Emergency Response Organization representing the Command and Control, Technical and Radiological functional areas will travel to Bay City to join representatives of the State of Texas and County of Matagorda Emergency Response Organizations. Representatives of Federal Emergency Management Agency and Nuclear Regulatory Commission are encouraged, but not required to attend. The State of Texas Department of Health, Bureau of Radiation Control will facilitate the recovery and re-entry seminar. The combined team will discuss post accident recovery and re-entry planning using State of Texas Radiological Emergency Management Procedure 22 "Recovery Operations" and STPEGS Emergency Response Implementing Procedure 0ERP01-ZV-RE01, "Recovery Operations" as guides. A prime focus of the discussion will be roles and responsibilities and the interdependent needs of the combined team.

THIS IS A DRILL

4.6 Supplemental Scenarios

SUPPLEMENTAL SCENARIO INDEX

1. Spent Fuel Cooling Pump 1B
2. Fuel Handling Building Reactor Coolant Pump motor delivery
3. Failure of Supplemental Purge valve MOV-005
4. Failure of 1K1 Breaker to trip
5. Failure of Containment Spray Pump 1A
6. Loss of 4.16 KV Bus E1B
7. Failure of Rod Control Power Cabinet 2AC
8. Failure of Outboard Supplemental Purge Valve FV-9777
9. Medical Emergency at ECW pump 1B
10. Containment Spray Pump 1C Discharge MOV Operator
11. Personnel Airlock door seal replacement

4.6 Supplemental Scenarios

SUPPLEMENTAL SCENARIO NO. 1

Spent Fuel Pit Cooling Pump 1B

Approximate Time: 0700 (T=0:00) **Location:** FHB 21'elev

Description:

The pump is out of service for preplanned replacement of the wearing rings.

Player Information:

Spent Fuel Cooling pump 1B had experienced reduced pressure and flow since its last maintenance overhaul. The work package required disassembly of the pump and measurement of the wearing ring clearances. The pump has been disassembled, the wearing rings replaced and the pump reassembled. At this time the components have been returned and re-installed. The work package is currently at Step 5.8 of procedure OPMP04-FC-0001, "Spent Fuel Pit Cooling Pump Maintenance." Coupling Reassembly.

Controller Note:

It will take approximately 1.5 hours to finish the job, which would include coupling alignment, install coupling guard and refill the bearing housings and sight oilers with new oil in accordance with 0PGP03-ZM-0004. Return the pump to service any time after 09:30 AM

References

OPMP04-FC-0001	Spent Fuel Pit Cooling Pump Maintenance
OPMP04-ZG-0002	Coupling Alignment
OPGP03-ZM-0004	Lubrication Program

4.6 Supplemental Scenarios

SUPPLEMENTAL SCENARIO NO. 2

Fuel Handling Building Truck Bay

Approximate Time: 0730 (T=0:30) **Location:** Outside FHB 29' elev.

Description:

Delivery of a refurbished Reactor Coolant Pump motor to the FHB truck bay.

Player Information:

While the truck driver was backing the tractor trailer into the truck bay he crashes into the right hand truck bay door. The trailer placed a large crease (about 4-5 feet) in the door at the truck bed level. The driver has pulled away from the door and the door will not close.

Controller Note:

Plant personnel can work (simulated) on repairing the door by any means they determine to be effective to seal the doors. This scenario is not vital to the sequence of events during the exercise. It is estimated to take approximately 2-3 hours to repair the door by either placing any type of covering device over the crease in the door. The response to this scenario can be successfully completed during the course of the exercise when you feel adequate corrective actions have taken place. Verify with the Lead OSC Controller prior to completing this task such that sufficient time has elapsed for successful task completion.

4.6 Supplemental Scenarios

SUPPLEMENTAL SCENARIO NO. 3

Failure of MOV-005 Inboard Supplemental Purge Valve

Approximate Time: 07:50 (T=0:50) **Location:** RCB 68' elev.

Description: Failure of MOV-005 inboard containment isolation valve.

Player Information:

None required. Allow team to trouble shoot. Only indications found will be no power available to valve operator.

Controller Information:

The motor operated valve for the inboard containment isolation valve to the supplemental purge system failed as is because of the loss of power to the E1B buss. There is no power available to stroke the valve until the E1B buss is returned later in the scenario at approximately 1245.

There are no maintenance activities the OSC Teams can take to repair the valve locally. The valve is located in Containment and access to the valve is not expected during the course of the exercise.

4.6 Supplemental Scenarios

SUPPLEMENTAL SCENARIO NO. 4

FAILURE OF 1K1 BREAKER TO TRIP

Approximate Time: (T=2:00) 0900 CDT **Location:** Turb. Bldg 29'

Description:

The Plant fails to have an Automatic or Manual trip of the Reactor Protection System. When Reactor Operators attempt to de-energize the 1K1 and 1L1 Busses the feeder breakers fail to open. This is caused by failure of both the under-voltage and the shunt relays to open the reactor trip breakers.

Player Information:

When dispatched to check the feeder breakers to 1K1 and 1L1 you discover that the breaker indicates closed. Attempts to trip the breaker locally result in the breaker failing to open.

When the cover is removed from the breaker it is determined that the trip coil has failed. However the trip latch assembly is still functional and can be manually tripped open using the trip latch assembly .

Controller Note:

This repair will be able to be done by manually tripping the breaker and then replacing the breaker Trip Coil. This repair is not critical to the success of the exercise.

REFERENCES:

OPMP05-NA-0001 General Electric 13.8 KV Breaker Tests

4.6 Supplemental Scenarios

SUPPLEMENTAL SCENARIO NO. 5

Containment Spray Pump 1A

Approximate Time: 0945 (T=2:45) **Location:** -29' FHB

Description:

Containment Spray Pump 1A seizes while in operation.

Player Information:

Controller Note: All actions are to be simulated. However all necessary equipment or actions must be available or addressed.

Containment Spray Pump 1A seizes due to a bad pump bearing. Maintenance activities must be completed for the failure of a pump bearing. The OSC Team should work through the process of returning the pump to service. All actions for work start, planning and tag outs should be followed appropriately for an emergency repair. Returning this pump to service during the Exercise is not critical to the timeline.

4.6 Supplemental Scenarios

SUPPLEMENTAL SCENARIO NO. 6

Loss of 4160 VAC ESF Bus E1B/ECW Pump 1B

Approximate Time: 0750 (T=0:50) **Location:** EAB 35 ft. Elev

Description:

At 0750 the E1B 4160-volt buss tripped due to a short in the ECW pump 1B motor. The pump breaker received a trip signal from the over current relay. However, the breaker failed to open due to a stuck trip latch. The buss over current relay tripped the buss and upon investigation the 86 lock out relay failed to reset. Investigations will find ECW pump 1B breaker closed with its associated over current relay flag indicating it operated. E1B buss over current relay indicates it operated.

Player Information:

Trouble shooting will find:

- ECW pump 1B over current relay is flagged,
- ECW pump 1B megger test indicates the motor coil is shorted,
- ECW pump 1B breaker is still closed and must be manually opened from the breaker cubicle,
- Bus E1B over current relay is flagged indicating it tripped the buss.

The 86 lock out relay will not reset when it is attempted to be reset. This requires the 86 relay to be replaced with a new relay. Replacement shoul be completed by 1245 and the buss may be re-energized.

Controller Note: All actions are to be simulated. However all necessary equipment or actions must be available or addressed.

Fault must remain on the bus until at least **12:45**. The controller should make sure that the crew uses standard safety practices to work between grounds. (Call the simulator ext. 7101, inform the instructor the breaker tripped and fault is off the bus.)

References:

OPMP05-ZE-0201	Insulation Resistance and Over Potential Testing of Cables and Buses
OPMP05-PK-2001	Switchgear Maintenance 4160 Volt Bus Maintenance E1B
9E-PKAB-01	Single line Diagram 4.16KV Class 1E Switchgear E1B
4121-01139GU	Single line Diagram

4.6 Supplemental Scenarios

SUPPLEMENTAL SCENARIO NO. 7

Failure of Rod Control Power Cabinet 2AC

Approximate Time: 0900T=2:00 **Location:** EAB Rm 323

Description:

Loss of both internal power supply modules within power cabinet 2AC causing loss of current to all twelve CRDMs powered from 2AC.

Player Information:

Group 2 rods in Shutdown bank A and control banks A and C Drop.

Maintenance Team sent to troubleshoot and repair power supply cabinet 2AC

Initiating Action	Response
1. Team investigates cabinet	Team discovers blown fuses due to failed hyristor silicon controlled rectifiers
2. Team replaces fuses and thyristor silicon controlled rectifiers	Power supply can be reenergized
3. Team informs OSC	

Controller Note:

This repair is not time critical to the success of the scenario. When maintenance personnel have demonstrated sufficient knowledge of the troubleshooting process the fuses can be replaced.

References:

OPOP02-RS-0001	Rod Control
0386-01-00262	Westinghouse Rod Control Tech Manual

ROD CONT NON-URGENT ALARM

Automatic Actions: None

Immediate Actions: None

Subsequent Actions:

1) DISPATCH an Operator to the 60 ft MAB Room 323 to determine which Power or Logic cabinet is in alarm.

2) INITIATE a Condition Report to investigate the fault.

Probable Causes:

1) Power supply failure
2) Blown fuse

Origin and Setpoint:

1) Loss of one redundant power supply in Logic Cabinet or Power Cabinets

References:

1) Logic Diagram 5Z-10-9-Z-42128

5M03-C-5

ROD CONT
NON-URGENT
ALARM

ROD DRIVE POWER SUPPLY DIAGRAM

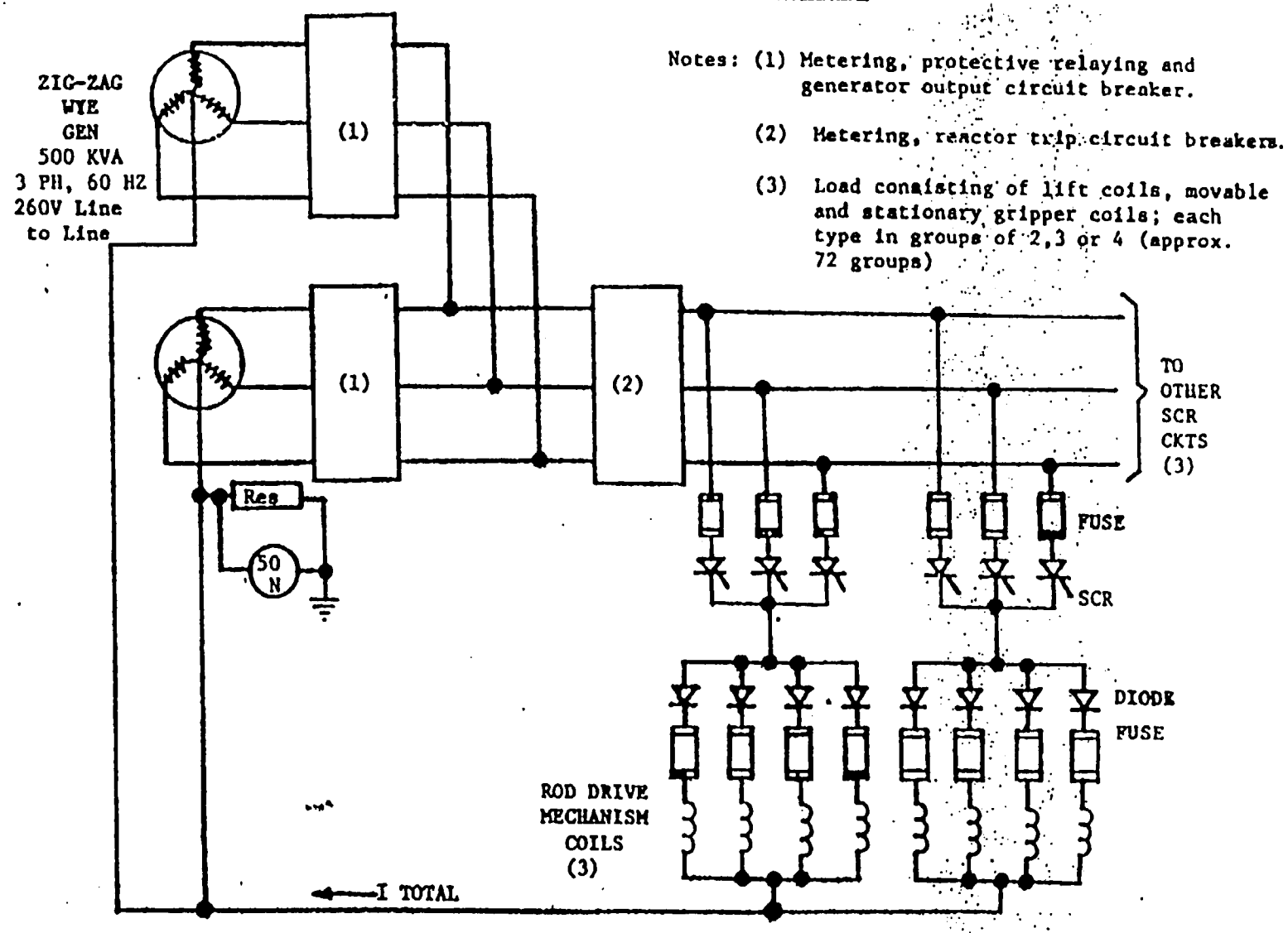

Notes: (1) Metering, protective relaying and generator output circuit breaker.

(2) Metering, reactor trip circuit breakers.

(3) Load consisting of lift coils, movable and stationary gripper coils; each type in groups of 2,3 or 4 (approx. 72 groups)

FIGURE 2

4.6 Supplemental Scenarios

SUPPLEMENTAL SCENARIO NO. 8

Failure of Outboard Supplementary Purge Valve

Approximate Time: 1130 (T=4:30) **Location:** MAB 68' elev.

Description:

Outboard Containment Supplementary Purge Isolation valve starts leaking by its seat as indicated by vent monitors RT-8012, RT-8013, and RT-8010 showing increased activity.

Player Information:

Local indications that the valve appears to be slightly off its closed seat. If a team attempts to put a wrench on the valve stem it is bound up and won't move. Maintenance Team sent to troubleshoot and repair FV-9777

Initiating Action	Response
1. Team investigates valve	Team discovers valve not fully closed
2. Team tries to reposition valve with wrench on stem.	Valve stem won't move. It is bound up
3. Team disassembles valve actuator	Team discovers valve actuator linkage arm has become detached from the stem adapter pin and is jammed preventing the full closure of the valve and preventing movement of the stem in the closed position.
4. Team disassembles valve linkage	Valve stem is freed and can be closed.
5. Team reports valve closed to OSC	OSC reports to TSC and Control Room

Controller Note:

This repair **is time critical** to the success of the scenario. Even when maintenance personnel have demonstrated sufficient knowledge of troubleshooting the problem the valve can't be closed until 12:45. Survey maps of Dose rates in the area around the valve and under the HVAC ventilation piping can be found in Section 4.8.3 In plant survey data.

References:

4409-00277-BVT Valdisk Purge Isolation Control Valves Tech Manual

VTD-V037-0018 R/0

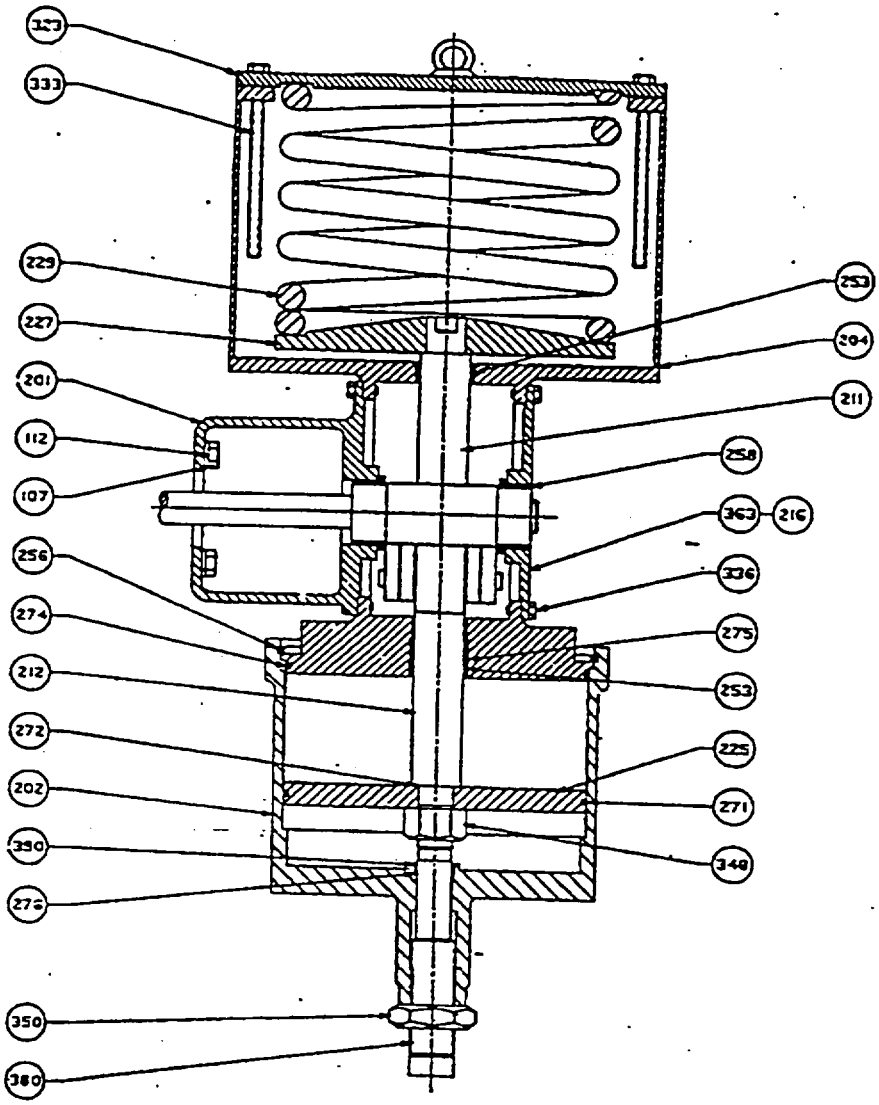

Figure 5: Actuator Assembly

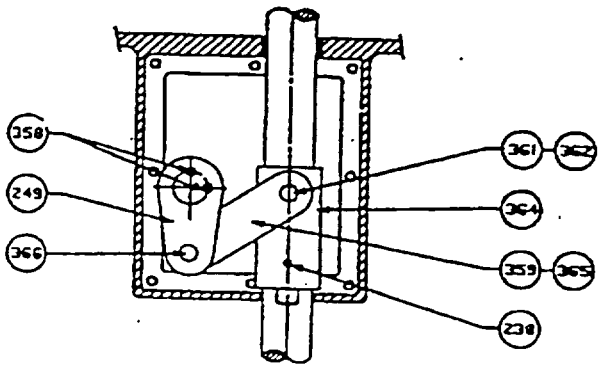

Figure 6: Stem Adapter/Linkage

107	bolt
112	washer
201	yoke
202	cylinder
204	transfer case
211	spring stem
212	lower actuator stem
216	stroke plate
225	piston
227	spring button
229.	spring
238	roll pin
249	lever
253	bushing
256	retaining ring
258	shaft
271	piston O-ring
272	actuator stem O-ring
274	cylinder O-ring
275	yoke O-ring
276	limit stop O-ring
323	spring cap
333	bolt
336	bolt
348	piston lock nut
350	jam nut
358	key
359	linkage arm
361	stem adapter pin
362	retaining ring
363	cover plate
364	stem adapter
365	set pin
366	crank pin
380	limit stop bolt
390	bushing

4.6 Supplemental Scenarios

SUPPLEMENTAL SCENARIO NO 9

Medical Emergency

Approximate Time: 1055 (T=3:45) **Location:** ECW Intake Structure

Description:

A worker in the ECW Intake Structure at ~1055 slips, falls, and becomes unconscious from hitting their head on the floor. The victim does not have any signs of bleeding or broken bones. We will terminate the medical response when the victim is loaded into the Site Ambulance.

Player Information:

Upon arrival at the scene, the first responder is given the following information upon examination of the patient. The patient is unconscious with the following vital signs:

Unconscious,	B/P = 160/100,
Resp.= 14 regular,	Pulse = 107,
Color Pale,	Skin - Warm and moist

If the patient is treated properly and given Oxygen he can then answer questions asked by the EMTs about his condition. The patient will be a little incoherent and complain of their head hurting. There are no visible signs of cuts, bruises, or bleeding on the individuals head or other body areas.

Time	Treatment with Oxygen	Treatment without Oxygen
+5	Semiconscious B/P = 160/100 Pulse = 107 Resp.=14 Color Pale Skin Warm/Moist Pupils Equal/reactive	Semiconscious B/P = 180/100 Pulse = 120 Resp.=20 Color pale Skin Warm/Moist Pupils Equal/reactive
+10	Stabilized Conscious B/P = 160/100 Pulse = 100 Resp. = 14	Unstabale Semiconscious B/P = 178/100 Pulse = 126 Resp. = 22

	Color slightly pale Nails cyanotic Skin Normal	Color pale Skin Cool/moist Pupils Equal/reactive
+20	Patient stable Conscious B/P = 160/100 Pulse = 95 Resp. = 14/regular Pupils Equal/Reactive Color normal Cyanosis absent	Unstable Unconscious B/P = 116/72 Pulse = 120 Resp. = 29/Labored Pupils Dilated/Lackluster Color pale Skin Cool/moist
+25	Patient Remains stable No change in conditions	No change in conditions
+30	Ambulance arrives	Ambulance arrives

If the Ambulance arrives before the +30 minutes continue to give the above information in accordance with treatment being administered to patient in the ambulance.

Controller Note:

Contamination Survey

If the patient is surveyed there will be no radiological concerns identified all readings will be as found.

4.6 Supplemental Scenarios

SUPPLEMENTAL SCENARIO NO. 10

Containment Spray Pump 1C Discharge MOV-0001C

Approximate Time: 0700 (T=0:00) **Location:** FHB –29' elev.

Description:

The Containment Spray Pump 1C Discharge MOV Operator is out of service as part of the initial conditions for a work order investigating failure to stroke during quarterly surveillance testing during the night shift.

Computer point (CSID0001C) indicating overload and thermal overloads at MCC found to be tripped. Walk down of discharge valve by operator indicated acrid smell and motor hot to touch.

Player Information:

Containment Spray Pump 1C Discharge MOV Operator is out of service for work order investigation of failure to stroke during surveillance testing. Motor overload indication is present.

Controller Notes:

The valve is out of service to perform work on restoring it to operable status following a failed surveillance test. As discussed above the valve is OOS to inspect for overload condition.

The work order has just gotten out of planning, an ECO was requested by the night shift Duty Maintenance Supervisor (DMS). No physical work has been performed on the valve as of 0700.

Expected Actions:

CAUTION: Do not allow any manipulations of plant components.

The OSC will send out a team to investigate the problem with the valve. At the MCC the team will test the motor and determine it is bad. They will order new motor and in parallel proceed to valve and remove old motor. Supervisor should also arrange for testing of 89-10 program valve.

During this time the OSC Coordinator will inform the TSC Maintenance Manager. The TSC Maintenance Manager will confer with the TSC engineers and TSC Manager and sometime during the drill direction will be given to have the valve opened manually.

A decision to release ECO and send the craft to the valve to manually open the valve will be made. At the valve, the actuator will not be able to be put in manual, the shaft key for the declutch lever is missing.

Note:

The team will need to remove the motor and use a wrench to turn the worm in order to open the valve. This will take time for the team to figure out and perform the work. The valve is not to be opened before 12:45 manually or with a new motor.

CAUTION: Do not allow any manipulations of plant components.

Reference:

CS-376284

4.6 Supplemental Scenarios

SUPPLEMENTAL SCENARIO NO. 11

Personnel Airlock Door Seal Replacement

Approximate Time: 0700 (T=0:00) **Location:** MAB 68' PAL.

Description:

Work is currently in progress on the RCB Personnel Airlock door Mechanical Auxiliary Building side door. The door seal was found to be extruded from the seal clamps. The seal is extruded from approximately the middle top to about 1/3 down to the mid section of the MAB door.

Player Information:

Work in progress, turned over from the nightshift. Personnel Airlock MAB door seal replacement. Work package- WAN number 167770 available for crew to review. Currently at step 5.5.2.1 of PMP04-ZG-0013, 'Personnel Airlock Inspection and Maintenance"

Controller Notes:

Completion of the door seal replacement is not critical to the sequence of events for this exercise. However, at some point during the exercise the crew working on restoring the PAL door will be required to seek dose extensions or discontinue the repair efforts due to the radiological conditions in the area caused by the Supplemental Purge valve leak.

Expected Actions:

CAUTION: Do not allow any manipulations of plant components.

Crew to continue to work through the work package and procedure for repair of the door seal. Crew must follow through the procedural steps and demonstrate knowledge of repair capabilities as well as having the necessary tools to complete repair.

Reference:

OPMP04-ZG-0013, Personnel Airlock Inspection and Maintenance
Work Package PM#: MM-1-IL-91000110
WAN #: 167770

4.7 OFFSITE MESSAGES

All Supplemental/Offsite Message Listing

NRC/FEMA Graded Exercise

Wednesday, October 18, 2000

Time	Message Number	From Organization:	From Facility	Message To:	Message Type:	Message Text	Ref. #
ClassificationStatus: Alert				*Total: 30*			
8:30	1	Local	Resident	JIC	Rumor	My son, who works at the plant, called his wife a few minutes ago and told her there was a problem in the reactor and that she should leave and go stay with her sister in Austin. What is going on?	200
8:33	2	Local	Print	JIC	Info Transfer	Hello, I'm calling from the Rockport Gazette. I was just talking with a friend who works down at your nuclear plant and he told me the emergency you're wrestling with might get worse. Will you be releasing information soon? Why did you declare an emergency?	1093
8:35	3	Local	Resident	JIC	Rumor	My neighbor called me and said there was an accident at the nuclear plant, is this true? What is wrong? When were you going to tell the public?	189
8:37	4	Local	Resident	JIC	Info Request	I have a friend who lives near the STP plant. She has called me to see if there is any truth to the rumor that there are problems at STP and that there is a possibility of an evacuation of the area. Is this true?	302
8:39	5	Local	Resident	JIC	Info Request	This is Judy Foster. I live about 5 miles from STP, near Tres Palacios Oaks. Has the safety of the plant been jeopardized and are the citizens in the area in any danger? What will happen if I go pick up my kids from school? You can't stop me, can you?	1200
8:41	6	Local	Resident	JIC	Info Request	Hi, I heard about this STP thing. My son attends Tidehaven Junior High School. I can't get through to the school, so can you tell me if I should go get him? I work in Bay City, but I can be there in 20 minutes. .	158
8:43	7	Local	Print	JIC	Media Inquiry	This is Jane Green with the Corpus Christi Daily News. I understand you have an emergency going on at the South Texas Project Nuclear Plant. What is the status of the plant? Have there been any injuries or fatalities? Where can I find out the latest information?	1198
8:45	8	Local	TV	JIC	Media Monitoring	The emergency that was declared at the South Texas Project Nuclear Power Plant in Bay City, Texas, began with a truck backing into a door on one of the vital buildings at STP. A reliable source at the nuclear plant, tells us that the plant is currently discussing the situation with local and state officials. An information center will be opened in Bay City to provide further and ongoing information about the problems at the plant. At this time it appears that no one has been injured at the plant, which is certainly good news for now.	869

All Supplemental/Offsite Message Listing

NRC/FEMA Graded Exercise
Wednesday, October 18, 2000

Time	Message Number	From Organization:	From Facility	Message To:	Message Type:	Message Text	Ref. #
8:46	9	Local	Resident	JIC	Info Request	This is Laurie Enos. Hey! What's going on down at that nuclear plant? I just heard they got some kind of emergency declared. What is going on? What are you doing to fix the problem?	1096
8:48	10	Local	Resident	JIC	Info Request	This is Helen Ferguson. Hello? I certainly hope you can help me. Is everything under control at STP? You're sure I'm safe? Nothing's going to happen to the reactor? Have they shut the plant down already? (If the answer is "yes") Is that why my lights just went out?	1094
8:50	11	Local	Resident	JIC	Info Request	Hi, I tried to reach my husband at STP, but the phone just keeps ringing. Charlie just started working there in the Maintenance Shop. Is there any way you can have him call me?	59
8:52	12	Local	Resident	JIC	Info Request	I heard on the radio that you all are having an emergency at STP. Is my family in danger? Should we evacuate? How will you tell me to evacuate if that becomes necessary? If I have to evacuate, what should we take with us and where should we go?	1205
8:55	13	Local	Resident	JIC	Info Request	The people across the street are leaving. I heard that we're supposed to wait for the sirens, but I haven't heard anything and those people are leaving. I live in Tres Palacios Oaks. Have the sirens sounded? If they haven't, then why are those people leaving?	56
8:57	14	Local	Resident	JIC	Info Request	I have a friend who lives near the STP plant. She has called me to see if there is any truth to the rumor that there are problems at STP and if so, is there is a possibility of an evacuation of the area? What should I tell her?	303
9:00	15	Local	Radio	JIC	Media Inquiry	This is Pat Donnelly from KTRH Radio in Houston. I want to know why more information hasn't been made available about the STP emergency. As a recent observer of an STP exercise, I know you have a serious problem at STP. The public deserves to know what it is. I have tried to get information from the police, the county commissioners, and Sheriff's Office. No one admits to knowing anything. What are you people trying to hide? You can't keep it covered up much longer. Tell me the truth about the current plant conditions.	314
9:03	16	Local	Print	JIC	Media Inquiry	This is Jenny Page of Columbus Daily Tribune. We are getting reports that you have problems with the reactor at STP. What's going on with the plant? Have there been any recommendations for the public? When is the county opening their Emergency Center? Can you provide the telephone numbers for the County emergency center?	194

All Supplemental/Offsite Message Listing

NRC/FEMA Graded Exercise
Wednesday, October 18, 2000

Time	Message Number	From Organization:	From Facility	Message To:	Message Type:	Message Text	Ref. #
9:05	17	Local	Resident	JIC	Info Request	This is Sarah Winters. I live in Matagorda and have heard that STP has declared an Alert. Is this true? Have there been any releases of radioactive material? (if the answer is "no" then ask if there is any potential of evacuation and ask what the criteria for evacuation are.)	300
9:06	18	Local	TV	JIC	Media Monitoring	The South Texas Project Nuclear Power Plant is once again in the news, and this time the news is not good. Even though there is not much informations coming from the plant at this time, it appears no one has been injured. An "alert" was declared this morning about 7:30 AM, but plant officials assure us there is no cause for immediate alarm. An Alert is the second least significant of four emergency classifications. Since this is the first time this plant has had an event of this magnitude, we are watching this event closely and will get you updated information as soon as we receive it.	878
9:07	19	Local	Resident	JIC	Rumor	I live just down from the entrance to Tres Palacios Oaks, and I heard the announcement that there was an emergency at STP and now I see Sheriff's Deputies down here. Why are they here? I haven't heard any sirens. What am I supposed to do?	46
9:09	20	Local	Resident	JIC	Rumor	A neighbor told me there was an accident at the plant and some workers may have been injured. I haven't heard any news reports. Is it safe for me to stay home or are they playing a sick joke on me?	190
9:11	21	Local	Radio	JIC	Media Inquiry	This is Pat Donnelly from KTRH Radio calling again. I forgot to ask, when I called a few minutes ago, what the various classes of emergencies for a nuclear power plant are and what they mean. Could you give me an explanation in layman's terms?	261
9:14	22	Local	Resident	JIC	Info Request	My child goes to school in Bay City. Is she still there or have the children been evacuated? Will she be allowed to go to child care after school or do I need to pick her up? I live in Matagorda.	70
9:16	23	Local	Resident	JIC	Info Request	Hi, I'm calling this number because it is the only one I could find where I could get some information. My son works at STP and I am very concerned about him. Can you help me find out if my son, Kurt, is OK?	64
9:19	24	Local	Resident	JIC	Info Request	My puppy was outside playing. I've heard he is going to die from the nuclear incident. Is he going to die? Can I bring him in and wash him? Or fix him? Or will I get sick, too?	289

All Supplemental/Offsite Message Listing

NRC/FEMA Graded Exercise

Wednesday, October 18, 2000

Time	Message Number	From Organization:	From Facility	Message To:	Message Type:	Message Text	Ref. #
9:22	25	Local	Resident	JIC	Info Request	There ain't no radiation, is there? You folks think you can scare me into selling my property cheap so you can take over this whole area. Well, you can forget that! I'm not going to leave my river property no matter what you say.	78
9:25	26	Local	Business	JIC	Info Request	I own a produce store in Wadsworth. I have covered all my produce with plastic to keep the radioactive stuff off of it, but nobody is going to buy it. People will think it's contaminated, and its all going to be rotten in a few days anyway; so who's going to pay for my produce.	123
9:29	27	Local	Print	JIC	Media Inquiry	This is Danielle Dally of the Dallas Morning News. I'm getting some conflicting information about this accident at STP and I need some straight answers. Is it true that there has been a terrorist attack on the plant and that a bomb was detonated?	52
9:31	28	Local	Print	JIC	Media Inquiry	My name is Barbara Mitchell from the Houston Chronicle. I would like to ask a few very quick questions. Really, won't take more than a minute. Just confirming information about an article that is ready to go to press as we speak. May I? Thank you. First, are there any injured personnel at the plant, and if so, are these radiation injuries? Okay secondly, which towns are in danger and have any been evacuated yet?	76
9:33	29	Local	Resident	JIC	Info Request	I am new to the area and am used to doing volunteer work. Where can I go to help out?	63
9:35	30	Local	Print	JIC	Media Inquiry	This is Freida of the Brazoria Facts. We are getting reports that you can't get the reactor under control. There are also reports of injured workers. What's going on with the plant? When is the state opening the Center?	193

All Supplemental/Offsite Message Listing

NRC/FEMA Graded Exercise

Wednesday, October 18, 2000

ClassificationStatus: General *Total: 74*

Time	Message Number	From Organization:	From Facility	Message To:	Message Type:	Message Text	Ref. #
11:17	1	Local	Resident	JIC	Rumor	"The siren at the Collegeport Volunteer Fire Department is going off and I know there is no fire in the area because I am on the volunteer fire department here. Can someone come out to "fix" this siren?	760
11:19	2	Local	Print	JIC	Media Monitoring	There are reports of a major reactor accident at the STP Nuclear power plant. The site is apparently being evacuated. The accident involves the loss of barriers that are needed to protect the public. Ever Since the accident at Chernobyl, U.S. Officials have indicated that this type of accident could not happen in this country.	305
11:20	3	Local	Print	JIC	Media Inquiry	This is Rosanna Tindell with the Lake Jackson Times. Have there been any injuries to plant personnel? Is the NRC at the plant? Is the reactor completely shutdown? What is power level? Is the plant still producing electricity? Shouldn't the plant be shutdown? Or the unaffected unit?	1048
11:22	4	Local	Resident	JIC	Rumor	My daughter is with a group of students from Wharton on a field trip to the Visitor's Center down there. Can you tell if they are all right? How I can get in touch with them?	761
11:25	5	Local	TV	JIC	Media Inquiry	We are sending a reporter and cameraman down by helicopter. How close can they get to the plant? Where exactly is home base for the media.? Can you give me an update on the situation, as it stands right now?	770
11:27	6	Local	Resident	JIC	Rumor	This is Amy Vanderpost. My husband works at the plant. I work in Houston. I am not going to be able to pick up our children today at school and need him to do it. They are both in school at Tidehaven Junior High School. I can not reach my husband and I am worried because I know there is something going on at the plant. Can you tell me what is going on? Can you get in touch with him? He needs to know to take care of getting the kids and to call me at the La Quinta Inn in Sugarland.	868
11:30	7	Local	Resident	JIC	Rumor	The siren near my house is going off. I am listening to the radio, 102.5, and they are talking about an accident at the nuclear power plant. I have always been a little concerned about living close to that plant. What is going on? Do I have anything to be concerned about? (Note to caller: If person in Rumor Control wants to know which siren is sounding, tell them it is the siren at the Collegeport Fire Department.)	758
11:32	8	Local	Resident	JIC	Info Request	This is Larry Johnson, I live over near Palacios. How many people can the Reception Center handle if we need to evacuate? Also, why can't my family and I use the Palacios Reception Center instead of driving all the way to Bay City?	1223

All Supplemental/Offsite Message Listing

NRC/FEMA Graded Exercise

Wednesday, October 18, 2000

Time	Message Number	From Organization:	From Facility	Message To:	Message Type:	Message Text	Ref. #
11:33	9	Local	Resident	JIC	Info Transfer	Hi, this is Janet Flowers, I live in Hale's Acres off of 2668. An ambulance from STP just went by here real fast headed for Bay City with the lights and sirens on. Was somebody hurt or killed at the Plant? Do you know who it is? How bad are the injuries?	1253
11:35	10	Local	Print	JIC	Media Inquiry	This isGail Jordan with the Port Lavaca Star. What is the most serious type of accident you can have? What would happen if a bomb were dropped on STP? Is the plant designed to withstand a serious earthquake or Hurricane?	1085
11:37	11	Local	Resident	JIC	Info Request	This is Karen Schweitzer calling for the Citizens For Safe Energy. We know that you have been measuring the radiation around the STP reactor. What are the results of your survey? How much of Texas is contaminated? How bad is it?	404
11:40	12	Local	Resident	JIC	Rumor	I hear all the people are evacuating the plant. I need to speak with my husband. Can you get word to him to call me at home?	771
11:42	13	Local	Resident	JIC	Rumor	I just heard there was a terrible release of radiation from your nuclear plant and that it is poisonous if we breath it. Is that true? What exactly is radiation anyway? I mean what does it smell like exactly?	108
11:43	14	Local	Resident	JIC	Info Transfer	Hi. I just saw and ambulance from STP going by here real fast. Looks like they were headed for the Hospital. Did somebody get hurt at STP today? Do you know who it is?	1254
11:45	15	Local	Resident	JIC	Rumor	I live north of Palacios. I have heard that I am supposed to take shelter. I don't have a fall out shelter. My neighbor tells me that in a situation like this that I should take shelter. Can you tell me where the nearest fallout shelter is located?	768
11:47	16	Local	Resident	JIC	Info Request	This is Jane Hill, Mayor of West Columbia; I have seen news reports and heard telephone interviews with the utility folks; why haven't we seen any comment from the county officials? What is going on? Do you need help?	750
11:50	17	Local	TV	JIC	Media Inquiry	Hello, this is Nancy Regin with CBS News working on the South Texas Project story. I understand that when such an emergency is declared at one of the country's nuclear plants, field monitoring teams are sent to measure radiation in the area. We want to send a camera crew to film on of those teams. Where will they be monitoring next and when? Can we catch up to them?	1238
11:52	18	Local	Resident	JIC	Info Request	Hello, I live about three miles from STP, Where should I evacuate to?	1203

All Supplemental/Offsite Message Listing

NRC/FEMA Graded Exercise
Wednesday, October 18, 2000

Time	Message Number	From Organization:	From Facility	Message To:	Message Type:	Message Text	Ref. #
11:55	19	Local	Resident	JIC	Info Request	This is Marie Carrington, I live in Palacios and own a small business there. I've been hearing about STP all day on the news. Can you tell me what is a safe dose of radiation? Is there really such a thing as a safe dose? Also, What is Potassium Iodide? I heard it will be given to emergency workers. Will it be given to the public? Why/Why not?	1214
11:57	20	Local	Resident	JIC	Rumor	This is Jenny Long, I heard there were several people injured and contaminated at STP due to this accident. How many were injured? And how serious are their injuries? So you think any of them will die? Where are they now?	1219
11:59	21	Local	TV	JIC	Media Inquiry	Hello, this is Lisa Hart with ABC in New York. I understand you are sending plant workers home because of the accident at South Texas Project this morning. Does your employee insurance cover them in case of injury or health problems as a result of an accident like this? Will anyone get cancer from this accident? What is the increase in health risks going to be?	1208
12:01	22	Local	Print	JIC	Media Inquiry	This is Beth Mullen with the Waco Herald. Have any plant employees been exposed to radiation because of emergency? How many people? To what exposure level? Is that dangerous? What actions are being taken to minimize the release? Is there a way to hold up the release for decay?	1052
12:02	23	Local	TV	JIC	Media Monitoring	And in the news this hour, the nuclear power plant disaster in Matagorda County is continuing. We are hearing that an evacuation is in progress of the area close to the plant. This area is really just a bedroom community of Houston. What will happen to this area, which is continually in an economic slump? Is the community facing years of isolation and desolation from the events happening today at the always troubled South Texas Nuclear Plant?	775
12:03	24	Local	TV	JIC	Media Inquiry	This is Maggie Lloyd with KAVC-TV. What is the potential for increased radioactive releases? What is the magnitude of the release? What is the dose projection? What is the prognosis for ending the release? What is the potential for increased release levels? Has airborne radioactivity been evaluated to determine if protective action is required for area residents?	1054
12:05	25	Local	Radio	JIC	Info Request	This is Regina Morgan with KRLD Radio in Dallas. I was wondering if you would describe the major differences between the South Texas Project and the Comanche Peak Nuclear Plant? I would also be interested in similarities between STP and TMI. I understand that there are some differences between STP and Chernobyl, but are the emergencies similar?	664

All Supplemental/Offsite Message Listing

NRC/FEMA Graded Exercise

Wednesday, October 18, 2000

Time	Message Number	From Organization:	From Facility	Message To:	Message Type:	Message Text	Ref. #
12:07	26	Local	Radio	JIC	Media Inquiry	This is Wanda Howe with KIOX Radio. How many people work there? How many are needed for the emergency? Have any buildings been damaged? If so, what? What is the generating capacity of the plant? Percentage of system? How much did it cost to build? Original cost? How long did it take? How much water is required to run the plant?	1075
12:10	27	Local	Resident	JIC	Rumor	My neighbor called and told me that I am supposed to shelter. Where am I supposed to go?	763
12:12	28	Local	Resident	JIC	Rumor	I live in Collegeport and we have been asked to evacuate our home. The only problem is that my husband just got home from having surgery, and the doctor told him not to get out of bed for a week. I certainly do not want to go off and leave him alone. What can I do?	862
12:15	29	Local	Resident	JIC	Info Request	According to your emergency calendar, I live in Zone #5. Should I evacuate? Where should I evacuate to?	1207
12:17	30	Local	TV	JIC	Info Request	This is Lucille Austin calling from Galveston. I work for a local TV station but we are not getting timely and accurate information. I was told by several sources that the accident at STP will affect barge traffic on the Intracoastal Waterway. Is this true?	622
12:20	31	Local	TV	JIC	Media Inquiry	This is Nancy Klein with KUSA-TV. How much spent fuel is on site? Where is it stored and how much space is left? What happens when you run out of space for the spent fuel?	1082
12:22	32	Local	Resident	JIC	Rumor	This is Rita Blessing, I live near Bay City. Will STP be repaired and restarted? Or will they just mothball the plant? Could it be turned into a Low Level Waste Site? Or will they just cover it up with dirt and cement?	1215
12:25	33	Local	Resident	JIC	Info Request	My name is Leslie Haugen, I can't reach my mother and I can't drive and I'm supposed to leave, what should I do? (Pause) I live in a mobile home in Bayview RV Park in Palacios.	81
12:27	34	Local	Resident	JIC	Info Request	This is Jan Montoya. Can contamination in the area of STP be picked up by migratory wildlife or game animals? Is it safe to eat game or fish taken in the area?	1225

All Supplemental/Offsite Message Listing

NRC/FEMA Graded Exercise

Wednesday, October 18, 2000

Time	Message Number	From Organization:	From Facility	Message To:	Message Type:	Message Text	Ref. #
12:28	35	Local	Radio	JIC	Media Monitoring	A report on KIKK radio: "This is Buster Brown with KIKK radio bringing you the latest on the situation in Matagorda County. The South Texas Project nuclear plant is in a state of emergency. People in the area are saying the devastation from today's accident will last decades. The plant is evacuating most plant employees and residents in the area are being told to take shelter. We hear the Public Citizens group, well known anti-nuclear activists, are scheduled to stage a demonstration against nuclear power in Bay City today. This is certainly timely with the ongoing emergency at the plant.	774
12:30	36	Local	Print	JIC	Media Inquiry	This is Mildred Sorenson with the Sargent Express and I have some questions for you. Is it safer to work at the nuclear plant compared to a coal plant? Explain!	1088
12:32	37	Local	Resident	JIC	Info Request	I just moved here, and I don't know if I'm supposed to evacuate. I heard on the radio that certain zones are supposed to leave, but I don't know what zone I live in.	57
12:35	38	Local	Print	JIC	Media Inquiry	This is Pauline Powel with USA Today. We are doing a feature story for tomorrow's edition regarding the accident at STP. I need a few more items for clarification. Can you give me a summary of today's events? How long will clean up take? Do you expect to be generating electricity by the end of this year? Next year? Do you know what this accident is going to cost your company and will those costs be passed on to the customer?	1212
12:37	39	Local	Business	JIC	Rumor	I have an emu farm west of Palacios. My birds have been loosing feathers for several days now and I want to know if this is related to all this stuff going on out at that nuclear plant.	779
12:40	40	Local	Resident	JIC	Rumor	Is this the Emergency Information Hotline? I live close to Palacios. I need to find out if my child is contaminated since he was outside playing this morning when the sirens were sounded. I did not bring him in when I heard the siren the first time because I thought it was just a routine test. Now, I am very worried about his health. How much contamination is harmful? How can they tell if he got any?	879
12:42	41	Local	Print	JIC	Media Inquiry	This is Nancy Simpson, Associated Press. How many people do you estimate have been exposed to radiation? What do you expect to happen to Reliant Energy Stock? Would you say this is the worst accident in US history?	1209

All Supplemental/Offsite Message Listing

NRC/FEMA Graded Exercise

Wednesday, October 18, 2000

Time	Message Number	From Organization:	From Facility	Message To:	Message Type:	Message Text	Ref. #
12:45	42	Local	TV	JIC	Media Inquiry	This is Janet Sawyer with KHOU-TV in Houston. I have been following the events of your accident at STP today. Can you tell me what the difference is between beta and gamma radiation? Are you releasing any of this radiation to the environment? If so, How much? How many people have been exposed to the radiation? What are you doing to protect the people who work there and the people who live near the plant?	1202
12:47	43	Local	Resident	JIC	Info Request	Hey, I have been seeing these vehicles driving around in the vicinity of the plant with instruments and gadgets hanging out of the windows. The people in these vehicles also seem to be taking some sort of samples like water, dirt and plants. Do you know who they are and what they are doing?	1221
12:50	44	Local	Print	JIC	Media Inquiry	This is Louann Franklin with the Washington Post. Can you explain in layman's terms just what exactly happened at South Texas Project today? Can I tape this conversation?	1211
12:52	45	Local	TV	JIC	Media Inquiry	This is JoAnn Rogers with CNN News. How long will the South Texas Project Nuclear Power Plant reactor be shut down? Can you estimate the percent of damage to the reactor core? How much money do you think it will cost for replacement power that has been lost due to this accident? Won't this have a significant impact on your stock price?	1210
12:55	46	Local	Print	JIC	Media Inquiry	Hello, I'm Joan Walton with the Wall Street Journal in New York. I have a few questions about South Texas Project Nuclear Plant and the current emergency situation. First, do you have any prognosis on what this event is going to do to the utility? What effects will it have on Reliant Energy and the other owners of STP? What sort of insurance does the company have to cover this kind of situation?	1237
12:57	47	Local	Print	JIC	Media Inquiry	Hi, this is Billy Taylor from the Bay City Daily Tribune. Since the evacuation order, we have been getting calls from the citizens asking where they might go to get money or temporary housing until this STP thing is over.	268
13:00	48	Local	Radio	JIC	Media Inquiry	This is Lindsey Harrison with KOUX Radio. What will you do with the damaged plant? How are you able to determine the amount of fuel damaged? When will be public be allowed to return? What does the public do if they don't have transportation?	1064

All Supplemental/Offsite Message Listing

NRC/FEMA Graded Exercise

Wednesday, October 18, 2000

Time	Message Number	From Organization:	From Facility	Message To:	Message Type:	Message Text	Ref. #
13:00	49	Local	Radio	JIC	Media Monitoring	We have just been informed that field teams from STP are roaming the countryside surrounding the Nuclear Plant with Geiger counters, tracking the path of potentially dangerous radiation escaping into the atmosphere from the crippled reactor of STP's Unit 1. The readings the field teams are finding give us cause concern. But just how far from the plant is the danger? Our source did not say. Our reporter at the information center in Bay City is asking for a clarification from plant officials.	852
13:02	50	Local	Business	JIC	Info Request	This is Raylene Royce, plant manager of the Phillips 66 Brazos Plant. I have heard news reports about the accident situation. Can we assist you with your emergency response? We have a fleet of 22 Vans that could be emptied of their equipment and be transported to Bay City within 90 minutes.	753
13:05	51	Local	TV	JIC	Media Inquiry	This is Gloria Norman with KTMV-TV. What kind of insurance does the company have to cover damages? Where will replacement power come from and who will pay? Who is the NRC contact for information? Phone number?	1061
13:07	52	Local	Resident	JIC	Rumor	Hi, I'm Craig Robertson. I am staying in my aunt's house near Palacios, and I am getting ready to leave to go to the Reception Center. I am not from around the area. Can you give me directions to the Reception Center?	858
13:10	53	Local	TV	JIC	Media Inquiry	This is Ivey Spears with WKTV in Kerrville. When will it be safe for people to return to their homes? What happens if they can never return? What actions have you taken to reimburse these people for their loses.	1222
13:12	54	Local	Print	JIC	Media Inquiry	This is Georgeann Jepson with the St. Louis Dispatch. How many people have been evacuated around STP? Where have they been evacuated to? Who makes the decision to evacuate those people? What are protective actions? Who is responsible for carrying them out?	1220
13:15	55	Local	Resident	JIC	Rumor	My grandfather lives in Collegeport. He has limited hearing and would not have heard any sirens, if they were used. He does have a TDD telephone. He has a neighbor who is almost always at home, who helps him. Neither my grandfather nor that neighbor is answering their phones. How do I find out if they have evacuated? I need to check on my grandfather and make sure he has his insulin and that he is ok.	877
13:17	56	Local	Resident	JIC	Info Request	This is Ruby Lang, I have some friends in Matagorda County I'm trying to locate to make sure they're okay. Can you tell me where the evacuation centers are and their phone number? Can I reach them there? I heard they were evacuated because of a fire, then someone else said there was some kind of emergency at STP---which is it?	1229

All Supplemental/Offsite Message Listing

NRC/FEMA Graded Exercise

Wednesday, October 18, 2000

Time	Message Number	From Organization:	From Facility	Message To:	Message Type:	Message Text	Ref. #
13:20	57	Local	TV	JIC	Media Inquiry	This is Venessa Bolles of channel 7 news. We are doing a story on what is being done to protect the people that were not evacuated today from around the STP plant. We understand that a drug called potassium iodide which prevents radiation sickness will be administered to the public living within 20 miles of the plant. How will this be done? What other things will be done?	343
13:22	58	Local	Business	JIC	Info Request	This is Rose Erdman of the Express Car Wash in Bay City calling about a concern for the environment. According to information I have received from friends, the people arriving here in Bay City from the area of the nuclear accident could be driving contaminated cars and trucks. Should I close my business to make sure that no contamination enters the water system near Bay City? I already have had people drop by, on their way to a reception center, to have their vehicles washed, is this dangerous to me and to the environment? Other people have stopped to demand that I stop washing cars.	681
13:25	59	Local	Print	JIC	Media Inquiry	Hello, this is Laurie Reynolds. The Bay City Daily Tribune is about to go to press with a special edition on today's disaster at STP and I wanted to verify the latest figures on radiation released, personnel evacuated, and so forth. What time was the current data taken? Is there someone I can call for regular updates?	1239
13:27	60	Local	Business	JIC	Info Request	This is Helen Hunt at the Bayside Camper Park in Palacios. Do we have to be concerned with that radiation stuff from the nuclear plant. I understand they are sending everyone to Bay City for temporary housing. If I have people that were in that area occupying campers won't that cause problems? Doesn't this place us in danger?	680
13:30	61	Local	Resident	JIC	Info Request	What is going to be done to pay people for losses and expenses. (do Follow-on questions as appropriate.)	311
13:32	62	Local	Print	JIC	Media Inquiry	This is Martha Hendricks from the AP news service. Could you please describe to me the way in which radiation samples will be taken in the field? How many people? From what organizations? What is the timing on getting good information from the samples? What samples will be taken?	337
13:35	63	Local	Print	JIC	Media Inquiry	This is Wanna Noe, Lake Jackson Times-Leader. I would like to do a photo story on your operations today. I am especially interested in the radiation monitoring teams and the control centers that direct the teams. Is it possible for us to get pictures so that the public understands what is being done to assess the damage from the nuclear power plant?	395

All Supplemental/Offsite Message Listing

NRC/FEMA Graded Exercise

Wednesday, October 18, 2000

Time	Message Number	From Organization:	From Facility	Message To:	Message Type:	Message Text	Ref. #
13:37	64	Local	Resident	JIC	Rumor	I am concerned about what is going to happen to me because of all the radiation at the plant and this accident that is going on. Am I going to get cancer? Will I have to move somewhere else?	764
13:39	65	Local	TV	JIC	Media Inquiry	This is Mary Mews, CNN TV news. What is the status of your monitoring efforts? Can you tell us what kind of radiation levels you have detected and where those readings were taken?	353
13:41	66	Local	Resident	JIC	Info Request	Hello? Hey, we were out of town most of the day and just tried to get back to our little spread on East Bayshore Drive. What are we supposed to do now that we can't go home?	133
13:43	67	Local	Resident	JIC	Info Request	I was out of town when the evacuation started. Now I have to buy new clothes and toilet items. I don't feel that I should have to pay for these. I already have them, I just can't go home to get them. How do I get reimbursed for my expenses? (You live northeast of Palacios)	131
13:45	68	Local	Resident	JIC	Info Request	Look, I just arrived at the mass care center and I don't understand what I need to qualify for assistance. I can't get back to my home now that we have been evacuated. What is it that I need to have exactly and when do I get to go home again?	270
13:47	69	Local	Resident	JIC	Info Request	When can we go back to our farm? I have to feed my cattle and goats. I have to check on my chickens.	281
13:49	70	Local	TV	JIC	Media Inquiry	Hello this is Kay Jepson from watch TV. We understand that FEMA will be setting up a location to handle state requests for assistance somewhere near the site of the accident. Can you provide us with a copy of the procedures that the state will be using to get that assistance? Can you also tell us the exact location of the facility for coordinating activities with the state? We would like to run a special, along with our regular coverage of the event, on the types of assistance the federal government can provide.	361
13:51	71	Local	Print	JIC	Media Inquiry	This is Kathryne Bennett. Hello, I'm covering the South Texas Project nuclear emergency for the Memphis Star and I thought perhaps you could answer a few questions from a power perspective. I hear there were blackouts at the plant--did the communities around STP experience blackouts as well? What areas are served by the plant? Will loss of power hinder evacuation efforts? How quickly was electricity restored to the plant? Do you know the cause of the power failure?	1226

All Supplemental/Offsite Message Listing

NRC/FEMA Graded Exercise

Wednesday, October 18, 2000

Time	Message Number	From Organization:	From Facility	Message To:	Message Type:	Message Text	Ref. #
13:53	72	Local	TV	JIC	Media Inquiry	This is Isabel Loring with WOAI-TV. What area around the site is affected by the release? What can you tell me about radioactive releases off site? Who measures and how is it done? How are they protected? What actions have you taken to stabilize the problem?	1055
13:55	73	Local	Print	JIC	Media Inquiry	This is Jackie Johnson with the Angleton Times. Is there any assistance available for handicapped persons who may not be able to evacuate themselves from the affected area?	1224
13:57	74	Local	TV	JIC	Media Inquiry	This is Hattie Taylor with WAPT-TV. How many fuel assemblies are there? Where do they come from? Is this what is called a "LOCA"? Are the main steam isolation valves operating?	1074

All Supplemental/Offsite Message Listing

NRC/FEMA Graded Exercise

Wednesday, October 18, 2000

Time	Message Number	From Organization:	From Facility	Message To:	Message Type:	Message Text	Ref. #
ClassificationStatus: SAE				*Total: 48*			
9:38	1	Local	Resident	JIC	Rumor	This is Kelly Baker. I heard there was an accident at STP and that several people were hurt. What hospital did you take them to? Can you tell me if Carl Baker was one of the injured? He is my husband and he works out there and I can't get in touch with him. His phone just rings and rings, no one will answer.	1246
9:41	2	Local	Resident	JIC	Info Request	Hi, my husband works at STP, but I can't get anyone to answer the phones. I'm trying to find out if I should expect him home at the regular time or if you'll have people working all night on the problem. How is it looking now? Is he safe down there? Can I reach him?	1233
9:44	3	Local	Resident	JIC	Info Request	Hello, my daughters live in Palacios and I have been trying to reach them ever since I first heard about that emergency at STP. Have people down there been sent somewhere? Is everyone allright? I'm worried sick about them. Is there any way to have them paged? How soon before this emergency is all over?	1232
9:46	4	Local	Resident	JIC	Rumor	I have a friend who works at STP and he said there was an accident at the plant this morning. Also I heard several people were hurt pretty bad. If this is true, how come you all haven't put this information out to the public?	1252
9:48	5	Local	Resident	JIC	Info Request	My husband, Jimmy Walker, works in Security at the plant. I am so concerned about him. Since he is with Security, I am just sure he is right in the middle of everything. Can you tell me how I can talk to him? I need to be sure he is ok.	886
9:50	6	Local	Radio	JIC	Media Monitoring	There is an unconfirmed report of an injury at the STP Nuclear Plant and word that at least one person has been taken to the hospital. A reporter is en route. We will have more details as the situation develops.	812
9:51	7	Local	Resident	JIC	Info Request	Hello, my name is Ruth Winger and I have a daughter who goes to Tidehaven Junior High School. Her name is Elizabeth Winger and she's in seventh grade. I work in Victoria and I just heard they may be letting school out because of this accident at STP. It will be an hour before I can get there, so will she even be there? Where do they take them ? What should I do?	152
9:53	8	Local	Resident	JIC	Rumor	My neighbor just called and said there was an accident at the nuclear plant and a couple of people have been hurt. What are you doing about it? Have you called the Bay City EMS to help? What is going on out there? Who is in charge?	1250

All Supplemental/Offsite Message Listing

NRC/FEMA Graded Exercise

Wednesday, October 18, 2000

Time	Message Number	From Organization:	From Facility	Message To:	Message Type:	Message Text	Ref. #
9:55	9	Local	Resident	JIC	Rumor	I tried to call my father, but he 's not answering. Can you get a message to my father, Vince Albert? He's some sort of engineer at the nuclear power plant, I think in Planning, maybe. Can you tell him that we are evacuating from our home because we live near Tres Palacios Bay. We'll be at Aunt Rose's house in Wharton.	49
9:57	10	Local	TV	JIC	Media Monitoring	Channel 11 interrupts our regular programming with the following important announcement. Emergency conditions now exist at the Nuclear Plant near Bay City. We have no word yet on any damage or whether radiation is being released. Shara Fryer is en route to cover the scene and more information will follow as soon as it becomes available.	757
9:58	11	Local	Print	JIC	Rumor	This is Mary Hunter. I just heard that some STP personnel have been taken to the Matagorda County Hospital because they were hurt in the accident you all had this morning. How come this information hasn't been on the radio or TV?	1251
10:00	12	Local	TV	JIC	Media Inquiry	This is John Rich with CCN-TV. I understand an emergency event is taking place at the South Texas Porject Nuclear Power Plant. We're sending out a camera crew. Who can I speak with about getting them through security at the plant gate?	1228
10:02	13	Local	Resident	JIC	Rumor	My son, who works at STP called his wife a few minutes ago and told her there was an accident at the plant and he heard three or four people got hurt. He also said the plant was having the worst emergency that it has ever been at the plant. He wants me and my daughter-in-law to pack up and go to my sister's place in Austin. Is it true that things are really bad and that those people really got hurt?	1249
10:04	14	Local	Print	JIC	Media Inquiry	This is Peter Graves with the Blessing Weekly Leader, Do you plan to have a radiological release from STP? Is there a best time of the day to release radiation? Who makes the determination that radiation may be released?	1216
10:05	15	Local	Radio	JIC	Media Monitoring	And the latest information from the South Texas Project nuclear power plant, euphemistically called the South Texas Project Electric Generating Station. Plant officials have declared what is called a Site Area Emergency. Eyewitness reports are that people are leaving the plant in droves. Plant officials are telling us there is nothing to worry about. Obviously, plant workers do not agree.	844
10:07	16	Local	Resident	JIC	Info Request	I was looking at my calendar. Should I Shelter in Place? Are there any specific things people should do if In-House Shelter is recommended?	1206

All Supplemental/Offsite Message Listing

NRC/FEMA Graded Exercise

Wednesday, October 18, 2000

Time	Message Number	From Organization:	From Facility	Message To:	Message Type:	Message Text	Ref. #
10:09	17	Local	Print	JIC	Rumor	This is Sandy Thompson with the Bay City Daily Tribune. We just received a call indicating that there was an accident at STP and that several people were injured. Can you tell me the names of the injured, what hospital they were taken to and how serious the injuries are?	1248
10:11	18	Local	Resident	JIC	Info Request	This is Francis Green, I live just north of STP. Are there any precautions I should take for my dairy cows? Can I continue to ship my milk to the creamery? If not, who will pay for the lost milk?	1199
10:14	19	Local	TV	JIC	Media Inquiry	Hello, this is Allen King with NBC News. I'm on my way down to STP from our regional office in Dallas. I'll be arriving by helicopter. Is the Emergency Operation Facility the best place to report for information? Do I need to warn my pilot of any potential flight dangers in the area?	1230
10:16	20	Local	Resident	JIC	Rumor	I just got a call from a friend of mine that works at STP. He said there was an emergency at the plant. He heard there were three people injured but didn't know their names. Can you tell me who the injured people are? This is important since my son works at STP.	1247
10:18	21	Local	Print	JIC	Media Inquiry	This is Sam Jennings with FOX News Network and I have some questions for you. What was the initiating event for the emergency? What caused (specific) initiating event? What is the expected duration? What is present classification and what is it based on? Is there more than one nuclear reactor at the site? Which is the affected unit? Is the second unit shut down or still operating?	1047
10:21	22	Local	Radio	JIC	Media Inquiry	Hi, this is Johnny Jackson--JJ--at 88 KIX in Houston. You're on live and we have some questions concerning the accident at STP. Can you tell us just what is going on at the nuclear plant, and what people in the area should be doing? How serious in the accident? Has anyone been hurt?	1201
10:23	23	Local	Print	JIC	Media Inquiry	This is Jean Anderson with the Dallas Morning News. Who is in charge of the emergency? How many people are involved? How/where can I get news releases? Is the plant responding in a normal fashion to the emergency? Is the fuel covered? If not, how will it be covered? What is current water level above fuel in the reactor?	1049
10:25	24	Local	Resident	JIC	Info Request	This is Hannah Strong and I have a question for you. Will my electric rates be affected by the emergency at STP?	1071

All Supplemental/Offsite Message Listing

NRC/FEMA Graded Exercise

Wednesday, October 18, 2000

Time	Message Number	From Organization:	From Facility	Message To:	Message Type:	Message Text	Ref. #
10:26	25	Local	TV	JIC	Media Monitoring	The latest from Matagorda County, where the South Texas Project is still experiencing difficulty. Neighbors around the plant are reporting that the area around the plant is putting off an eerie glow that is making them very apprehensive. We are seeing people spontaneously leaving the area, even though county officials have not recommended evacuation.	793
10:28	26	Local	TV	JIC	Media Inquiry	Hello, I'm calling from ABC News and we have a team on its way to cover the events at the nuclear station. Have you held a news conference yet? If so, how can I get the information? When is the next one scheduled? Do you have any available video footage inside the plant? What sort of clearance will our photographer need to enter the plant?	1241
10:30	27	Local	Resident	JIC	Info Request	I hear there is a problem at the Nuke Plant? Why hasn't my EAS radio activated?	746
10:33	28	Local	Print	JIC	Media Inquiry	This is Nancy Wentworth with the Houston Chronicle. Are there any existing threats to continued containment integrity? What is potential for further degradation? What is NRC phone number at Media Center? Who can I call for information on county preparedness? Phone number? Who can I call for information on state preparedness? Phone number? Who are the resident NRC inspectors? Phone number?	1080
10:35	29	Local	Resident	JIC	Info Request	Hello. I have two children who go to Palacios Elementary School in the 2nd and 4th grades. I'm at work in Bay City right now and the school phone line is busy. With this accident at STP , are they being re-located or would I have time to pick them up? .	154
10:37	30	Local	Radio	JIC	Media Inquiry	This is Arlene Miller with Radio Station WXYZ. How does this emergency compare to Chernobyl? Is this worse than TMI? Is there an emergency back up for shutting the reactor down?	1072
10:39	31	Local	TV	JIC	Media Inquiry	Hi, this is Katrina Sorenson at WWL in New Orleans, LA.. Can you tell me who are the owners of STP? What kind of reactor is it? Who manufactured the system? How much uranium is required for the reactor?	1076
10:41	32	Local	Resident	JIC	Info Request	Hello. I have a handicapped child who attends Palacios Elementary School. He's in a wheelchair. I'm at work at Matagorda General Hospital and I can't get through to the school - line's busy. Well he's a special needs kid. I want to come pick him up; can you make sure he's not re-located so I can get him from school? .	155
10:43	33	Local	Resident	JIC	Info Request	I live in Matagorda, I have car trouble and can't go get my children who are at Matagorda Elementary & McAllister Jr. High. What will happen to my kids?	747

All Supplemental/Offsite Message Listing

NRC/FEMA Graded Exercise

Wednesday, October 18, 2000

Time	Message Number	From Organization:	From Facility	Message To:	Message Type:	Message Text	Ref. #
10:45	34	Local	Resident	JIC	Info Request	Hello, my name is Elmer Morrison. I think I'm supposed to leave, but I have two horses. I have no place to take them. Can I come back in to feed them, or is there somebody who can take care of them? What do I do?	113
10:47	35	Local	Resident	JIC	Info Request	This is Micki Dunlop of Palacios. My 13 year old daughter is very upset because her pony, Moonshine, was outside grazing during the nuclear plant accident. What are we supposed to tell her?	137
10:49	36	Local	TV	JIC	Media Inquiry	This is Rolanda Jones from ABC news. I have heard that there is a serious radiological problem at STP. I have also heard rumors that the governor has or is about to order evacuation for persons in the danger zone. No one in Matagorda County will confirm or deny this. Is there a serious emergency? Why aren't people Given the facts? If the county doesn't carry out its responsibilities, will the federal or state government take over? Isn't it the federal government's job to protect the public health and safety in a nuclear power accident?	304
10:51	37	Local	TV	JIC	Media Inquiry	This is Linda Burton from CBS news Washington D.C. I need some information about the STP power plant accident. I should also warn you that our conversation is being recorded. What is the current situation at the plant? Has evacuation been completed? I understand evacuation was done as a precaution. Is this normal? has there been a release? Do you expect a release? Obviously you expect something out of the ordinary or the governor would not have directed an evacuation. What protective actions are being taken for the emergency workers? Have there been any casualties? When do you expect the utility to get the plant under control?	333
10:53	38	Local	Resident	JIC	Info Request	This is Jackson Brown calling. I need more hay for my livestock. I had a fire in my barn that destroyed the hay I had stored. Where can I get some more hay?	392
10:55	39	Local	Print	JIC	Media Inquiry	This is Jan Rather with the Philadelphia Inquirer and I have some questions for you. What are the emergency classifications and which one are you in? Do the operators have to leave the control room? What is the purpose of the containment? How good can the containment be if you have a release? How big is the containment?	1063
10:58	40	Local	Resident	JIC	Info Request	Yeah, I just got all my clothes and food together and I'm ready to clear out, but now I don't know where to go. I ain't listenin' to that "stay put" garbage. You ain't tellin' me nothin's really going on. Ain't there someplace where the Red Cross got one of them flood centers opened for people who got no relatives nearby? Just tell me where do I go before it gets worse?	1236

All Supplemental/Offsite Message Listing

NRC/FEMA Graded Exercise

Wednesday, October 18, 2000

Time	Message Number	From Organization:	From Facility	Message To:	Message Type:	Message Text	Ref. #
11:00	41	Local	TV	JIC	Media Inquiry	I'm Paul Marshall, calling from ABC-TV. We have a helicopter headed to South Texas Project now. Can you give permission for our pilot to make a pass over the site? Also, can you tell me which direction the wind is blowing so the pilot can avoid it? Radiation levels are lower when you're higher in the atmosphere, aren't they?	1235
11:02	42	Local	Radio	JIC	Media Inquiry	This is Barbara Waters with KIUP Radio in Corpus Christi. Are all major plant safety systems available? Is stability of power grid affected by unit coming off line? Is there a chance offsite power could be lost? What happens then?	1081
11:04	43	Local	TV	JIC	Media Inquiry	This is Sandy Parks. I'm a TV news reporter in NY. I have read the wire service report about the emergency at STP. The information we have is very sketchy. Could you tell me what the current plant conditions are? There is a rumor that evacuation has been ordered. Who in Texas can order evacuation? Can you confirm this?	265
11:07	44	Local	Print	JIC	Media Inquiry	This is Renelda Hughes with the Victoria Advocate and I have some questions for you. What is cold shutdown? How is containment vented? Why? What is decay heat and why is it significant?	1073
11:09	45	Local	Print	JIC	Media Inquiry	This is Samantha Smiley, with the Port Lavaca Tribune. Why isn't Governor Bush at your Joint Information Center? I saw him on TV earlier today campaining in New York. Don't you think this emergency in the State of Texas is more important? Is he coming to the JIC? When do you expect him to arrive?	1218
11:11	46	Local	Print	JIC	Media Inquiry	This is Brenda Cabot of US News And World Report. I need to talk to someone about the accident at the STP power plant that is happening right now. I need some information about what the public should be doing and what's going on. Can you please tell me when the federal government will activate the response plan for these types of incidents? When can the state expect to receive some assistance?	321
11:13	47	Local	Resident	JIC	Info Request	This is Grace Montoya. We live Northeast of Palacios about three miles. Both my husband and I don't hear as well as we used to. We did hear the sirens, but we couldn't understand what the man on the radio was saying. Is there an emergency? What should we do? Where should we go?	112

All Supplemental/Offsite Message Listing

NRC/FEMA Graded Exercise

Wednesday, October 18, 2000

Time	Message Number	From Organization:	From Facility	Message To:	Message Type:	Message Text	Ref. #
11:15	48	Elected Officials	Congressman	JIC	Info Request	Good morning, this is Congressman Ron Paul. I'm calling about the problem we're picking up about the South Texas Project Nuclear Plant and I need information so I can brief the President tomorrow morning. Is it as serious as it sounds? If the public is told to evacuate, how much time will they have to get out of the area? How much higher could radiation levels go before you get this thing under control? Who should I call for follow-up details?	1234

4.8 RADIOLOGICAL INFORMATION

This drill is based upon radiological conditions that occur in the plant after the loss of power to the ESF E1B 4160 Volt Bus. This prevents the control room from shutting the inboard Supplementary Purge valve due to a loss of power. Another problem results in an ATWS condition, which requires the dispatch of a plant operator to open the scram breakers to complete the reactor trip. All the rods are inserted, however Rod D4 CB D GRP1 is ejected from the core and a LOCA inside containment starts. Due to the flux tilt and the localized hot spots in the core caused by the ATWS, and the mechanical damage caused by the rod ejection, clad damage is sustained in parts of the core. When the reactor trips indications are received of Rod D4 CB D GRP1 not showing rod bottom lights lit. A rod ejection accident has occurred and caused further fuel clad degradation at the time of the ejection. This produces clad damage of approximately 4 - 10% as given in the FSAR Section 15.4.8 analysis of an ejected Rod Control Cluster Assembly.

Containment radiation levels increase to near 1,000 R/hr due to the Reactor Coolant leak caused by the ejected rod cluster. As Containment pressure increases there is a failure of the containment spray pumps to keep containment pressure to a minimum. This increased pressure causes the opening of the outboard Supplementary Purge Isolation Valve resulting in a breech of containment. RT-8012 and RT-8013 go into alarm indicating a radioactive release from containment through the Supplementary Purge line into the Unit vent. RT-8010 soon goes into alarm indicating the Unit Vent is releasing radioactive material into the environment.

Section 4.8.1 provides Chemistry data, including Reactor Coolant Chemistry isotopic, Reactor Containment Building Atmosphere isotopic, and Reactor Containment Building Sump isotopic results during the Exercise. PASS dose rate data for inside the PASS room is also included if a PASS sample is taken for any of the above.

Section 4.8.3 provides in plant dose rate data for various elevations of plant structures. Due to the leak out of Supplementary Purge the area around the MAB 60'elevation outside the Containment Personnel Airlock will have the highest dose rate readings. Letdown piping will show normal values for the general area readings, and will isolate at approximately 9:00 AM when Safety Injection starts. Contact readings on the Containment wall will increase throughout the drill for the EAB/MAB and FHB.

When the Containment release starts through the Supplementary Purge system that piping will have contact dose rates rapidly increase to about 20 R/hr. Repair teams sent to close Supplementary Purge valve FV-9777 will have to work in this 10 to 20 R/hr field.

REACTOR COOLANT CHEMISTRY

RCS CHEMISTRY	
Real Time period start	7:00
Real Time Period end	7:44
Drill Time	0:00
Concentration (uCi/cc)	
RCS Gases	
Ar41	2.30E-02
Kr85m	3.40E-09
Kr85	0.00E+00
Kr87	5.20E-04
Kr88	7.20E-04
Xe131m	0.00E+00
Xe133	2.50E-02
Xe133m	3.40E-04
Xe135	1.40E-03
Xe135m	5.00E-04
Xe138	1.43E-03
RCS Liquid	
F-18	1.20E-01
Na-24	7.30E-04
Cr-51	3.50E-05
Mn-54	6.25E-05
Co-58	2.40E-04
Co-60	5.15E-05
I131	6.00E-04
I132	1.25E-04
I133	6.25E-04
I134	1.83E-03
I135	9.20E-04
Cs134	0.00E+00
Cs135	0.00E+00
Cs136	0.00E+00
Cs137	0.00E+00
Cs138	1.70E-03
Rb87	0.00E+00
Rb88	0.00E+00
Chemical Parameters	
Tritium (uCi/cc)	0.91
pH	6.56
Fluoride (ppm)	0.003
Chloride (ppm)	0.004
Sulfate (ppm)	0.007
D.O. (ppm)	<0.002
Lithium (ppm)	2.46
Boron (ppm)	740
Hydrogen (cc/kg)	41
Conductivity uS/cm	25.6

REACTOR COOLANT CHEMISTRY

RCS CHEMISTRY	
Real Time period start	7:45
Real Time Period end	7:59
Drill Time	0:45
Concentration (uCi/cc)	
RCS Gases	
Ar41	2.09E-02
Kr85m	7.06E-08
Kr85	0.00E+00
Kr87	6.25E-07
Kr88	6.25E-07
Xe131m	0.00E+00
Xe133	1.25E-06
Xe133m	0.00E+00
Xe135	1.25E-06
Xe135m	6.25E-07
Xe138	2.49E-06
RCS Liquid	
F-18	1.20E-01
Na-24	7.30E-04
Cr-51	3.50E-05
Mn-54	6.25E-05
Co-58	2.40E-04
Co-60	5.15E-05
I131	6.00E-04
I132	1.25E-04
I133	6.25E-04
I134	1.83E-03
I135	9.20E-04
Cs134	0.00E+00
Cs135	0.00E+00
Cs136	0.00E+00
Cs137	0.00E+00
Cs138	1.70E-03
Rb87	0.00E+00
Rb88	0.00E+00
Chemical Parameters	
Tritium (uCi/cc)	1.01
pH	6.49
Fluoride (ppm)	0.003
Chloride (ppm)	0.004
Sulfate (ppm)	0.007
D.O. (ppm)	<0.002
Lithium (ppm)	2.34
Boron (ppm)	740
Hydrogen (cc/kg)	39
Conductivity uS/cm	24.3

RCS CHEMISTRY	
Real Time period start	8:00
Real Time Period end	8:14
Drill Time	1:00
Concentration (uCi/cc)	
RCS Gases	
Ar41	1.90E-02
Kr85m	7.06E-08
Kr85	0.00E+00
Kr87	6.25E-07
Kr88	6.25E-07
Xe131m	0.00E+00
Xe133	1.25E-06
Xe133m	0.00E+00
Xe135	1.25E-06
Xe135m	6.25E-07
Xe138	2.49E-06
RCS Liquid	
F-18	1.20E-01
Na-24	7.30E-04
Cr-51	3.50E-05
Mn-54	6.25E-05
Co-58	2.40E-04
Co-60	5.15E-05
I131	6.00E-08
I132	1.25E-06
I133	6.25E-07
I134	2.49E-06
I135	1.24E-06
Cs134	0.00E+00
Cs135	0.00E+00
Cs136	0.00E+00
Cs137	0.00E+00
Cs138	0.00E+00
Rb87	0.00E+00
Rb88	0.00E+00
Chemical Parameters	
Tritium (uCi/cc)	1.11
pH	6.42
Fluoride (ppm)	0.003
Chloride (ppm)	0.004
Sulfate (ppm)	0.007
D.O. (ppm)	<0.002
Lithium (ppm)	2.25
Boron (ppm)	740
Hydrogen (cc/kg)	39
Conductivity uS/cm	23.2

RCS CHEMISTRY	
Real Time period start	8:15
Real Time Period end	8:29
Drill Time	1:15
Concentration (uCi/cc)	
RCS Gases	
Ar41	1.73E-02
Kr85m	2.09E+00
Kr85	2.54E-01
Kr87	3.71E+00
Kr88	5.47E+00
Xe131m	5.44E-02
Xe133	1.62E+01
Xe133m	2.34E+00
Xe135	4.63E+00
Xe135m	3.01E+00
Xe138	1.05E+01
RCS Liquid	
F-18	1.20E-01
Na-24	7.30E-04
Cr-51	3.50E-05
Mn-54	6.25E-05
Co-58	2.40E-04
Co-60	5.15E-05
I131	7.77E+00
I132	1.03E+01
I133	1.48E+01
I134	1.59E+01
I135	1.33E+01
Cs134	5.83E-01
Cs135	1.31E-11
Cs136	6.62E-02
Cs137	1.04E-01
Cs138	1.21E+00
Rb87	5.33E-16
Rb88	9.77E-01
Chemical Parameters	
Tritium (uCi/cc)	1.22
pH	6.34
Fluoride (ppm)	0.003
Chloride (ppm)	0.004
Sulfate (ppm)	0.007
D.O. (ppm)	<0.002
Lithium (ppm)	2.1
Boron (ppm)	740
Hydrogen (cc/kg)	39
Conductivity uS/cm	21.6

REACTOR COOLANT CHEMISTRY

RCS CHEMISTRY	
Real Time period start	8:30
Real Time Period end	8:44
Drill Time	1:30
Concentration (uCi/cc)	
RCS Gases	
Ar41	1.57E-02
Kr85m	4.18E+00
Kr85	5.08E-01
Kr87	7.42E+00
Kr88	1.09E+01
Xe131m	1.09E-01
Xe133	3.25E+01
Xe133m	4.69E+00
Xe135	9.27E+00
Xe135m	6.01E+00
Xe138	2.10E+01
RCS Liquid	
F-18	1.20E-01
Na-24	7.30E-04
Cr-51	3.50E-05
Mn-54	6.25E-05
Co-58	2.40E-04
Co-60	5.15E-05
I131	1.55E+01
I132	2.07E+01
I133	2.96E+01
I134	3.17E+01
I135	2.66E+01
Cs134	1.17E+00
Cs135	2.62E-11
Cs136	1.32E-01
Cs137	2.08E-01
Cs138	2.42E+00
Rb87	1.07E-15
Rb88	1.95E+00
Chemical Parameters	
Tritium (uCi/cc)	1.34
pH	6.24
Fluoride (ppm)	0.003
Chloride (ppm)	0.004
Sulfate (ppm)	0.007
D.O. (ppm)	<0.002
Lithium (ppm)	1.9
Boron (ppm)	740
Hydrogen (cc/kg)	39
Conductivity uS/cm	19.5

REACTOR COOLANT CHEMISTRY

RCS CHEMISTRY	
Real Time period start	8:45
Real Time Period end	8:59
Drill Time	1:45
Concentration (uCi/cc)	
RCS Gases	
Ar41	1.43E-02
Kr85m	6.27E+00
Kr85	7.63E-01
Kr87	1.11E+01
Kr88	1.64E+01
Xe131m	1.63E-01
Xe133	4.87E+01
Xe133m	7.03E+00
Xe135	1.39E+01
Xe135m	9.02E+00
Xe138	3.15E+01
RCS Liquid	
F-18	1.20E-01
Na-24	7.30E-04
Cr-51	3.50E-05
Mn-54	6.25E-05
Co-58	2.40E-04
Co-60	5.15E-05
I131	2.33E+01
I132	3.10E+01
I133	4.44E+01
I134	4.76E+01
I135	3.99E+01
Cs134	1.75E+00
Cs135	3.94E-11
Cs136	1.99E-01
Cs137	3.13E-01
Cs138	3.63E+00
Rb87	1.60E-15
Rb88	2.93E+00
Chemical Parameters	
Tritium (uCi/cc)	1.47
pH	6.14
Fluoride (ppm)	0.003
Chloride (ppm)	0.004
Sulfate (ppm)	0.007
D.O. (ppm)	<0.002
Lithium (ppm)	1.7
Boron (ppm)	740
Hydrogen (cc/kg)	39
Conductivity uS/cm	17.5

REACTOR COOLANT CHEMISTRY

RCS CHEMISTRY	
Real Time period start	9:00
Real Time Period end	9:14
Drill Time	2:00
Concentration (uCi/cc)	
RCS Gases	
Ar41	1.30E-02
Kr85m	9.30E+00
Kr85	1.14E+00
Kr87	1.60E+01
Kr88	2.42E+01
Xe131m	2.45E-01
Xe133	7.30E+01
Xe133m	1.06E+01
Xe135	2.10E+01
Xe135m	1.27E+01
Xe138	3.81E+01
RCS Liquid	
F-18	1.09E-01
Na-24	1.76E-06
Cr-51	3.53E-08
Mn-54	6.25E-08
Co-58	2.49E-07
Co-60	6.25E-08
I131	3.49E+01
I132	4.54E+01
I133	6.64E+01
I134	6.74E+01
I135	5.94E+01
Cs134	2.62E+00
Cs135	1.12E-10
Cs136	2.98E-01
Cs137	4.69E-01
Cs138	8.75E+00
Rb87	4.43E-15
Rb88	7.53E+00
Chemical Parameters	
Tritium (uCi/cc)	1.62
pH	6.03
Fluoride (ppm)	0.003
Chloride (ppm)	0.004
Sulfate (ppm)	0.007
D.O. (ppm)	<0.002
Lithium (ppm)	1.5
Boron (ppm)	1311
Hydrogen (cc/kg)	39
Conductivity uS/cm	15.4

REACTOR COOLANT CHEMISTRY

RCS CHEMISTRY	
Real Time period start	9:15
Real Time Period end	9:29
Drill Time	2:15
Concentration (uCi/cc)	
RCS Gases	
Ar41	1.18E-02
Kr85m	6.91E+01
Kr85	8.55E+00
Kr87	1.18E+02
Kr88	1.79E+02
Xe131m	1.83E+00
Xe133	5.46E+02
Xe133m	7.94E+01
Xe135	1.58E+02
Xe135m	9.33E+01
Xe138	2.64E+02
RCS Liquid	
F-18	9.93E-02
Na-24	1.64E-06
Cr-51	3.32E-08
Mn-54	5.88E-08
Co-58	2.35E-07
Co-60	5.88E-08
I131	2.61E+02
I132	3.36E+02
I133	4.96E+02
I134	4.90E+02
I135	4.42E+02
Cs134	1.96E+01
Cs135	1.05E-09
Cs136	2.23E+00
Cs137	3.50E+00
Cs138	6.95E+01
Rb87	4.03E-14
Rb88	6.36E+01
Chemical Parameters	
Tritium (uCi/cc)	1.78
pH	5.91
Fluoride (ppm)	0.003
Chloride (ppm)	0.004
Sulfate (ppm)	0.007
D.O. (ppm)	<0.002
Lithium (ppm)	1.3
Boron (ppm)	1389
Hydrogen (cc/kg)	39
Conductivity uS/cm	13.5

REACTOR COOLANT CHEMISTRY

RCS CHEMISTRY	
Real Time period start	9:30
Real Time Period end	9:44
Drill Time	2:30
Concentration (uCi/cc)	
RCS Gases	
Ar41	1.07E-02
Kr85m	1.23E+02
Kr85	1.55E+01
Kr87	2.01E+02
Kr88	3.16E+02
Xe131m	3.32E+00
Xe133	9.90E+02
Xe133m	1.45E+02
Xe135	2.90E+02
Xe135m	1.59E+02
Xe138	3.66E+02
RCS Liquid	
F-18	9.04E-02
Na-24	1.52E-06
Cr-51	3.13E-08
Mn-54	5.53E-08
Co-58	2.21E-07
Co-60	5.53E-08
I131	4.74E+02
I132	5.89E+02
I133	8.96E+02
I134	8.16E+02
I135	7.93E+02
Cs134	3.56E+01
Cs135	3.04E-09
Cs136	4.04E+00
Cs137	6.36E+00
Cs138	1.52E+02
Rb87	1.12E-13
Rb88	1.55E+02
Chemical Parameters	
Tritium (uCi/cc)	1.96
pH	5.74
Fluoride (ppm)	0.003
Chloride (ppm)	0.004
Sulfate (ppm)	0.007
D.O. (ppm)	<0.002
Lithium (ppm)	1
Boron (ppm)	1473
Hydrogen (cc/kg)	36
Conductivity uS/cm	10.6

REACTOR COOLANT CHEMISTRY

RCS CHEMISTRY	
Real Time period start	9:45
Real Time Period end	9:59
Drill Time	2:45
Concentration (uCi/cc)	
RCS Gases	
Ar41	9.76E-03
Kr85m	1.72E+02
Kr85	2.21E+01
Kr87	2.69E+02
Kr88	4.37E+02
Xe131m	4.73E+00
Xe133	1.41E+03
Xe133m	2.08E+02
Xe135	4.17E+02
Xe135m	2.15E+02
Xe138	4.12E+02
RCS Liquid	
F-18	8.22E-02
Na-24	1.42E-06
Cr-51	2.94E-08
Mn-54	5.21E-08
Co-58	2.08E-07
Co-60	5.21E-08
I131	6.74E+02
I132	8.10E+02
I133	1.27E+03
I134	1.07E+03
I135	1.11E+03
Cs134	5.06E+01
Cs135	5.99E-09
Cs136	5.75E+00
Cs137	9.05E+00
Cs138	2.26E+02
Rb87	2.10E-13
Rb88	2.59E+02
Chemical Parameters	
Tritium (uCi/cc)	1.68
pH	4.9
Fluoride (ppm)	0.003
Chloride (ppm)	0.004
Sulfate (ppm)	0.007
D.O. (ppm)	<0.002
Lithium (ppm)	0.3
Boron (ppm)	2188
Hydrogen (cc/kg)	21
Conductivity uS/cm	7.7

REACTOR COOLANT CHEMISTRY

RCS CHEMISTRY	
Real Time period start	10:00
Real Time Period end	10:14
Drill Time	3:00
Concentration (uCi/cc)	
RCS Gases	
Ar41	4.94E-03
Kr85m	2.58E+02
Kr85	3.36E+01
Kr87	3.88E+02
Kr88	6.49E+02
Xe131m	7.20E+00
Xe133	2.14E+03
Xe133m	3.20E+02
Xe135	6.41E+02
Xe135m	3.14E+02
Xe138	5.15E+02
RCS Liquid	
F-18	7.48E-02
Na-24	1.57E-06
Cr-51	3.29E-08
Mn-54	5.83E-08
Co-58	2.33E-07
Co-60	5.84E-08
I131	1.03E+03
I132	1.19E+03
I133	1.93E+03
I134	1.50E+03
I135	1.68E+03
Cs134	7.71E+01
Cs135	1.17E-08
Cs136	8.75E+00
Cs137	1.38E+01
Cs138	3.39E+02
Rb87	3.90E-13
Rb88	4.31E+02
Chemical Parameters	
Tritium (uCi/cc)	1.62
pH	4.9
Fluoride (ppm)	0.003
Chloride (ppm)	0.004
Sulfate (ppm)	0.007
D.O. (ppm)	<0.002
Lithium (ppm)	0.3
Boron (ppm)	2188
Hydrogen (cc/kg)	6
Conductivity uS/cm	7.7

REACTOR COOLANT CHEMISTRY

RCS CHEMISTRY	
Real Time period start	10:15
Real Time Period end	10:29
Drill Time	3:15
Concentration (uCi/cc)	
RCS Gases	
Ar41	1.12E-04
Kr85m	6.11E+02
Kr85	8.17E+01
Kr87	8.62E+02
Kr88	1.51E+03
Xe131m	1.75E+01
Xe133	5.20E+03
Xe133m	7.85E+02
Xe135	1.58E+03
Xe135m	7.19E+02
Xe138	8.62E+02
RCS Liquid	
F-18	6.81E-02
Na-24	3.29E-06
Cr-51	7.00E-08
Mn-54	1.24E-07
Co-58	4.94E-07
Co-60	1.24E-07
I131	2.49E+03
I132	2.76E+03
I133	4.65E+03
I134	3.22E+03
I135	4.00E+03
Cs134	1.87E+02
Cs135	3.76E-08
Cs136	2.12E+01
Cs137	3.35E+01
Cs138	8.08E+02
Rb87	1.19E-12
Rb88	1.17E+03
Chemical Parameters	
Tritium (uCi/cc)	1.56
pH	4.88
Fluoride (ppm)	0.003
Chloride (ppm)	0.004
Sulfate (ppm)	0.007
D.O. (ppm)	<0.002
Lithium (ppm)	0.28
Boron (ppm)	2188
Hydrogen (cc/kg)	0
Conductivity uS/cm	7.7

REACTOR COOLANT CHEMISTRY

RCS CHEMISTRY	
Real Time period start	10:30
Real Time Period end	10:44
Drill Time	3:30
Concentration (uCi/cc)	
RCS Gases	
Ar41	6.00E-04
Kr85m	2.75E+03
Kr85	3.74E+02
Kr87	3.74E+03
Kr88	6.74E+03
Xe131m	8.00E+01
Xe133	2.38E+04
Xe133m	3.61E+03
Xe135	7.29E+03
Xe135m	3.23E+03
Xe138	3.76E+03
RCS Liquid	
F-18	6.19E-02
Na-24	1.24E-05
Cr-51	2.67E-07
Mn-54	4.73E-07
Co-58	1.89E-06
Co-60	4.73E-07
I131	1.14E+04
I132	1.22E+04
I133	2.12E+04
I134	1.38E+04
I135	1.81E+04
Cs134	8.56E+02
Cs135	2.01E-07
Cs136	9.71E+01
Cs137	1.53E+02
Cs138	3.28E+03
Rb87	6.06E-12
Rb88	5.32E+03
Chemical Parameters	
Tritium (uCi/cc)	1.5
pH	4.87
Fluoride (ppm)	0.003
Chloride (ppm)	0.004
Sulfate (ppm)	0.007
D.O. (ppm)	<0.002
Lithium (ppm)	0.27
Boron (ppm)	2188
Hydrogen (cc/kg)	0
Conductivity uS/cm	7.7

RCS CHEMISTRY	
Real Time period start	10:45
Real Time Period end	10:59
Drill Time	3:45
Concentration (uCi/cc)	
RCS Gases	
Ar41	1.09E-03
Kr85m	7.81E+02
Kr85	1.02E+02
Kr87	1.20E+03
Kr88	1.97E+03
Xe131m	2.18E+01
Xe133	6.49E+03
Xe133m	9.69E+02
Xe135	1.94E+03
Xe135m	1.00E+03
Xe138	2.25E+03
RCS Liquid	
F-18	5.63E-02
Na-24	1.52E-06
Cr-51	3.31E-08
Mn-54	5.87E-08
Co-58	2.34E-07
Co-60	5.87E-08
I131	3.11E+03
I132	3.63E+03
I133	5.83E+03
I134	4.74E+03
I135	5.08E+03
Cs134	2.33E+02
Cs135	3.73E-08
Cs136	2.65E+01
Cs137	4.17E+01
Cs138	7.42E+02
Rb87	1.11E-12
Rb88	1.03E+03
Chemical Parameters	
Tritium (uCi/cc)	1.5
pH	4.87
Fluoride (ppm)	0.003
Chloride (ppm)	0.004
Sulfate (ppm)	0.007
D.O. (ppm)	<0.002
Lithium (ppm)	0.27
Boron (ppm)	2188
Hydrogen (cc/kg)	0
Conductivity uS/cm	7.7

REACTOR COOLANT CHEMISTRY

RCS CHEMISTRY	
Real Time period start	11:00
Real Time Period end	11:14
Drill Time	4:00
Concentration (uCi/cc)	
RCS Gases	
Ar41	9.89E-04
Kr85m	5.32E+03
Kr85	6.64E+02
Kr87	8.88E+03
Kr88	1.37E+04
Xe131m	1.42E+02
Xe133	4.24E+04
Xe133m	6.19E+03
Xe135	1.23E+04
Xe135m	7.07E+03
Xe138	1.87E+04
RCS Liquid	
F-18	5.13E-02
Na-24	1.87E-07
Cr-51	4.11E-09
Mn-54	7.28E-09
Co-58	2.90E-08
Co-60	7.28E-09
I131	2.08E+03
I132	2.64E+03
I133	3.94E+03
I134	3.83E+03
I135	3.50E+03
Cs134	1.56E+02
Cs135	1.12E-08
Cs136	1.77E+01
Cs137	2.79E+01
Cs138	4.78E+02
Rb87	3.76E-13
Rb88	4.82E+02
Chemical Parameters	
Tritium (uCi/cc)	1.5
pH	4.85
Fluoride (ppm)	0.003
Chloride (ppm)	0.004
Sulfate (ppm)	0.007
D.O. (ppm)	<0.002
Lithium (ppm)	0.25
Boron (ppm)	2188
Hydrogen (cc/kg)	0
Conductivity uS/cm	7.7

REACTOR COOLANT CHEMISTRY

RCS CHEMISTRY	
Real Time period start	11:15
Real Time Period end	11:29
Drill Time	4:15
Concentration (uCi/cc)	
RCS Gases	
Ar41	9.00E-04
Kr85m	7.59E+03
Kr85	9.45E+02
Kr87	1.27E+04
Kr88	1.96E+04
Xe131m	2.02E+02
Xe133	6.03E+04
Xe133m	8.80E+03
Xe135	1.75E+04
Xe135m	1.01E+04
Xe138	2.69E+04
RCS Liquid	
F-18	4.66E-02
Na-24	1.85E-07
Cr-51	8.48E-05
Mn-54	1.51E-04
Co-58	6.00E-04
Co-60	1.51E-04
I131	8.72E+04
I132	1.14E+05
I133	1.66E+05
I134	1.69E+05
I135	1.48E+05
Cs134	6.54E+03
Cs135	2.71E-07
Cs136	7.43E+02
Cs137	1.17E+03
Cs138	2.04E+04
Rb87	1.07E-11
Rb88	1.78E+04
Chemical Parameters	
Tritium (uCi/cc)	1.5
pH	4.84
Fluoride (ppm)	0.003
Chloride (ppm)	0.004
Sulfate (ppm)	0.007
D.O. (ppm)	<0.002
Lithium (ppm)	0.23
Boron (ppm)	2188
Hydrogen (cc/kg)	0
Conductivity uS/cm	7.8

REACTOR COOLANT CHEMISTRY

RCS CHEMISTRY	
Real Time period start	11:30
Real Time Period end	11:44
Drill Time	4:30
Concentration (uCi/cc)	
RCS Gases	
Ar41	8.18E-04
Kr85m	9.86E+03
Kr85	1.23E+03
Kr87	1.66E+04
Kr88	2.55E+04
Xe131m	2.62E+02
Xe133	7.82E+04
Xe133m	1.14E+04
Xe135	2.27E+04
Xe135m	1.31E+04
Xe138	3.52E+04
RCS Liquid	
F-18	4.24E-02
Na-24	1.83E-07
Cr-51	5.39E-04
Mn-54	9.57E-04
Co-58	3.81E-03
Co-60	9.58E-04
I131	3.74E+04
I132	4.77E+04
I133	7.10E+04
I134	6.85E+04
I135	6.32E+04
Cs134	2.81E+03
Cs135	1.76E-07
Cs136	3.19E+02
Cs137	5.02E+02
Cs138	1.06E+04
Rb87	6.67E-12
Rb88	1.01E+04
Chemical Parameters	
Tritium (uCi/cc)	1.5
pH	4.78
Fluoride (ppm)	0.003
Chloride (ppm)	0.004
Sulfate (ppm)	0.007
D.O. (ppm)	<0.002
Lithium (ppm)	0.21
Boron (ppm)	2276
Hydrogen (cc/kg)	0
Conductivity uS/cm	8.3

RCS CHEMISTRY	
Real Time period start	11:45
Real Time Period end	11:59
Drill Time	4:45
Concentration (uCi/cc)	
RCS Gases	
Ar41	7.44E-04
Kr85m	5.71E+03
Kr85	7.08E+02
Kr87	9.70E+03
Kr88	1.48E+04
Xe131m	1.51E+02
Xe133	4.52E+04
Xe133m	6.58E+03
Xe135	1.31E+04
Xe135m	7.75E+03
Xe138	2.23E+04
RCS Liquid	
F-18	3.86E-02
Na-24	1.80E-07
Cr-51	9.93E-04
Mn-54	1.76E-03
Co-58	7.03E-03
Co-60	1.76E-03
I131	2.16E+04
I132	2.77E+04
I133	4.10E+04
I134	4.04E+04
I135	3.65E+04
Cs134	1.62E+03
Cs135	9.14E-08
Cs136	1.84E+02
Cs137	2.90E+02
Cs138	5.37E+03
Rb87	3.43E-12
Rb88	5.11E+03
Chemical Parameters	
Tritium (uCi/cc)	1.5
pH	4.64
Fluoride (ppm)	0.003
Chloride (ppm)	0.004
Sulfate (ppm)	0.007
D.O. (ppm)	<0.002
Lithium (ppm)	0.2
Boron (ppm)	2676
Hydrogen (cc/kg)	0
Conductivity uS/cm	10.7

RCS CHEMISTRY	
Real Time period start	12:00
Real Time Period end	12:14
Drill Time	5:00
Concentration (uCi/cc)	
RCS Gases	
Ar41	6.76E-04
Kr85m	5.22E+03
Kr85	6.43E+02
Kr87	8.95E+03
Kr88	1.35E+04
Xe131m	1.38E+02
Xe133	4.11E+04
Xe133m	5.97E+03
Xe135	1.18E+04
Xe135m	7.16E+03
Xe138	2.16E+04
RCS Liquid	
F-18	3.51E-02
Na-24	1.78E-07
Cr-51	6.30E-03
Mn-54	1.12E-02
Co-58	4.46E-02
Co-60	1.12E-02
I131	1.96E+04
I132	2.54E+04
I133	3.73E+04
I134	3.75E+04
I135	3.33E+04
Cs134	1.47E+03
Cs135	7.05E-08
Cs136	1.67E+02
Cs137	2.64E+02
Cs138	4.59E+03
Rb87	2.69E-12
Rb88	4.20E+03
Chemical Parameters	
Tritium (uCi/cc)	1.5
pH	4.61
Fluoride (ppm)	0.003
Chloride (ppm)	0.004
Sulfate (ppm)	0.007
D.O. (ppm)	<0.002
Lithium (ppm)	0.17
Boron (ppm)	2676
Hydrogen (cc/kg)	0
Conductivity uS/cm	10.9

RCS CHEMISTRY	
Real Time period start	12:15
Real Time Period end	12:29
Drill Time	5:15
Concentration (uCi/cc)	
RCS Gases	
Ar41	6.15E-04
Kr85m	5.16E+03
Kr85	6.35E+02
Kr87	8.87E+03
Kr88	1.34E+04
Xe131m	1.36E+02
Xe133	4.05E+04
Xe133m	5.89E+03
Xe135	1.17E+04
Xe135m	7.10E+03
Xe138	2.15E+04
RCS Liquid	
F-18	3.20E-02
Na-24	1.76E-07
Cr-51	1.16E-02
Mn-54	2.06E-02
Co-58	8.22E-02
Co-60	2.06E-02
I131	1.94E+04
I132	2.52E+04
I133	3.68E+04
I134	3.72E+04
I135	3.29E+04
Cs134	1.46E+03
Cs135	6.66E-08
Cs136	1.65E+02
Cs137	2.60E+02
Cs138	4.51E+03
Rb87	2.56E-12
Rb88	4.07E+03
Chemical Parameters	
Tritium (uCi/cc)	1.5
pH	4.61
Fluoride (ppm)	0.003
Chloride (ppm)	0.004
Sulfate (ppm)	0.007
D.O. (ppm)	<0.002
Lithium (ppm)	0.17
Boron (ppm)	2676
Hydrogen (cc/kg)	0
Conductivity uS/cm	10.9

REACTOR COOLANT CHEMISTRY

RCS CHEMISTRY	
Real Time period start	12:30
Real Time Period end	12:44
Drill Time	5:30
Concentration (uCi/cc)	
RCS Gases	
Ar41	5.59E-04
Kr85m	5.15E+03
Kr85	6.34E+02
Kr87	8.87E+03
Kr88	1.34E+04
Xe131m	1.36E+02
Xe133	4.05E+04
Xe133m	5.88E+03
Xe135	1.17E+04
Xe135m	7.09E+03
Xe138	2.15E+04
RCS Liquid	
F-18	2.91E-02
Na-24	1.74E-07
Cr-51	7.35E-02
Mn-54	1.31E-01
Co-58	5.21E-01
Co-60	1.31E-01
I131	1.94E+04
I132	2.51E+04
I133	3.68E+04
I134	3.72E+04
I135	3.29E+04
Cs134	1.45E+03
Cs135	6.60E-08
Cs136	1.65E+02
Cs137	2.60E+02
Cs138	4.50E+03
Rb87	2.54E-12
Rb88	4.05E+03
Chemical Parameters	
Tritium (uCi/cc)	1.5
pH	4.61
Fluoride (ppm)	0.003
Chloride (ppm)	0.004
Sulfate (ppm)	0.007
D.O. (ppm)	<0.002
Lithium (ppm)	0.17
Boron (ppm)	2676
Hydrogen (cc/kg)	0
Conductivity uS/cm	10.9

RCS CHEMISTRY	
Real Time period start	12:45
Real Time Period end	12:59
Drill Time	5:45
Concentration (uCi/cc)	
RCS Gases	
Ar41	5.08E-04
Kr85m	5.15E+03
Kr85	6.34E+02
Kr87	8.86E+03
Kr88	1.34E+04
Xe131m	1.36E+02
Xe133	4.05E+04
Xe133m	5.88E+03
Xe135	1.17E+04
Xe135m	7.09E+03
Xe138	2.15E+04
RCS Liquid	
F-18	2.64E-02
Na-24	1.72E-07
Cr-51	1.35E-01
Mn-54	2.41E-01
Co-58	9.59E-01
Co-60	2.41E-01
I131	1.94E+04
I132	2.51E+04
I133	3.68E+04
I134	3.72E+04
I135	3.29E+04
Cs134	1.45E+03
Cs135	6.59E-08
Cs136	1.65E+02
Cs137	2.60E+02
Cs138	4.50E+03
Rb87	2.54E-12
Rb88	4.05E+03
Chemical Parameters	
Tritium (uCi/cc)	1.5
pH	4.61
Fluoride (ppm)	0.003
Chloride (ppm)	0.004
Sulfate (ppm)	0.007
D.O. (ppm)	<0.002
Lithium (ppm)	0.17
Boron (ppm)	2676
Hydrogen (cc/kg)	0
Conductivity uS/cm	10.9

REACTOR COOLANT CHEMISTRY

RCS CHEMISTRY	
Real Time period start	13:00
Real Time Period end	13:14
Drill Time	6:00
Concentration (uCi/cc)	
RCS Gases	
Ar41	4.62E-04
Kr85m	5.15E+03
Kr85	6.34E+02
Kr87	8.86E+03
Kr88	1.34E+04
Xe131m	1.36E+02
Xe133	4.05E+04
Xe133m	5.88E+03
Xe135	1.17E+04
Xe135m	7.09E+03
Xe138	2.15E+04
RCS Liquid	
F-18	2.41E-02
Na-24	1.70E-07
Cr-51	4.16E-01
Mn-54	7.40E-01
Co-58	2.95E+00
Co-60	7.40E-01
I131	1.94E+04
I132	2.51E+04
I133	3.68E+04
I134	3.72E+04
I135	3.29E+04
Cs134	1.45E+03
Cs135	6.59E-08
Cs136	1.65E+02
Cs137	2.60E+02
Cs138	4.50E+03
Rb87	2.54E-12
Rb88	4.05E+03
Chemical Parameters	
Tritium (uCi/cc)	1.5
pH	4.61
Fluoride (ppm)	0.003
Chloride (ppm)	0.004
Sulfate (ppm)	0.007
D.O. (ppm)	<0.002
Lithium (ppm)	0.17
Boron (ppm)	2676
Hydrogen (cc/kg)	0
Conductivity uS/cm	10.9

REACTOR COOLANT CHEMISTRY

RCS CHEMISTRY	
Real Time period start	13:15
Real Time Period end	13:29
Drill Time	6:15
Concentration (uCi/cc)	
RCS Gases	
Ar41	4.20E-04
Kr85m	2.54E+03
Kr85	3.16E+02
Kr87	4.22E+03
Kr88	6.53E+03
Xe131m	6.77E+01
Xe133	2.02E+04
Xe133m	2.95E+03
Xe135	5.86E+03
Xe135m	3.33E+03
Xe138	8.39E+03
RCS Liquid	
F-18	2.19E-02
Na-24	1.68E-07
Cr-51	6.96E-01
Mn-54	1.24E+00
Co-58	4.93E+00
Co-60	1.24E+00
I131	9.65E+03
I132	1.22E+04
I133	1.83E+04
I134	1.74E+04
I135	1.63E+04
Cs134	7.25E+02
Cs135	4.95E-08
Cs136	8.23E+01
Cs137	1.30E+02
Cs138	2.98E+03
Rb87	1.87E-12
Rb88	2.83E+03
Chemical Parameters	
Tritium (uCi/cc)	1.5
pH	4.61
Fluoride (ppm)	0.003
Chloride (ppm)	0.004
Sulfate (ppm)	0.007
D.O. (ppm)	<0.002
Lithium (ppm)	0.17
Boron (ppm)	2676
Hydrogen (cc/kg)	0
Conductivity uS/cm	10.9

REACTOR COOLANT CHEMISTRY

RCS CHEMISTRY		
Real Time period start	13:30	13:45
Real Time Period end	13:44	13:59
Drill Time	6:30	6:45
Concentration (uCi/cc)		
RCS Gases		
Ar41	3.82E-04	3.47E-04
Kr85m	3.03E+02	3.61E+01
Kr85	3.92E+01	4.87E+00
Kr87	4.57E+02	4.95E+01
Kr88	7.63E+02	8.90E+01
Xe131m	8.40E+00	1.04E+00
Xe133	2.50E+03	3.10E+02
Xe133m	3.72E+02	4.69E+01
Xe135	7.46E+02	9.46E+01
Xe135m	3.60E+02	4.09E+01
Xe138	4.98E+02	2.96E+01
RCS Liquid		
F-18	1.99E-02	1.81E-02
Na-24	1.66E-07	1.65E-07
Cr-51	6.96E-01	6.96E-01
Mn-54	1.24E+00	1.24E+00
Co-58	4.93E+00	4.93E+00
Co-60	1.24E+00	1.24E+00
I131	1.20E+03	1.48E+02
I132	1.41E+03	1.62E+02
I133	2.25E+03	2.77E+02
I134	1.77E+03	1.80E+02
I135	1.96E+03	2.37E+02
Cs134	8.99E+01	1.12E+01
Cs135	1.24E-08	2.34E-09
Cs136	1.02E+01	1.27E+00
Cs137	1.61E+01	2.00E+00
Cs138	4.67E+02	5.38E+01
Rb87	4.39E-13	7.68E-14
Rb88	5.43E+02	7.80E+01
Chemical Parameters		
Tritium (uCi/cc)	1.5	1.5
pH	4.61	4.61
Fluoride (ppm)	0.003	0.003
Chloride (ppm)	0.004	0.004
Sulfate (ppm)	0.007	0.007
D.O. (ppm)	<0.002	<0.002
Lithium (ppm)	0.17	0.17
Boron (ppm)	2676	2676
Hydrogen (cc/kg)	0	0
Conductivity uS/cm	10.9	10.9

REACTOR COOLANT CHEMISTRY

RCS CHEMISTRY	
Real Time period start	14:00
Real Time Period end	14:14
Drill Time	7:00
Concentration (uCi/cc)	
RCS Gases	
Ar41	3.16E-04
Kr85m	4.31E+00
Kr85	6.04E-01
Kr87	5.36E+00
Kr88	1.04E+01
Xe131m	1.29E-01
Xe133	3.84E+01
Xe133m	5.91E+00
Xe135	1.20E+01
Xe135m	4.78E+00
Xe138	1.75E+00
RCS Liquid	
F-18	1.65E-02
Na-24	1.63E-07
Cr-51	6.96E-01
Mn-54	1.24E+00
Co-58	4.93E+00
Co-60	1.24E+00
I131	1.84E+01
I132	1.86E+01
I133	3.41E+01
I134	1.84E+01
I135	2.87E+01
Cs134	1.38E+00
Cs135	3.92E-10
Cs136	1.57E-01
Cs137	2.48E-01
Cs138	5.54E+00
Rb87	1.19E-14
Rb88	1.01E+01
Chemical Parameters	
Tritium (uCi/cc)	1.5
pH	4.61
Fluoride (ppm)	0.003
Chloride (ppm)	0.004
Sulfate (ppm)	0.007
D.O. (ppm)	<0.002
Lithium (ppm)	0.17
Boron (ppm)	2676
Hydrogen (cc/kg)	0
Conductivity uS/cm	10.9

REACTOR CONTAINMENT
BUILDING SUMP CHEMISTRY

RCB SUMP CHEMISTRY	
Real Time period start	7:00
Real Time Period end	7:29
Drill Time	0:00
Concentration (uCi/cc)	
ENTRAINED NOBLE GAS	
Ar41	0.00E+00
Kr85m	0.00E+00
Kr85	0.00E+00
Kr87	0.00E+00
Kr88	0.00E+00
Xe131m	0.00E+00
Xe133	0.00E+00
Xe133m	0.00E+00
Xe135	0.00E+00
Xe135m	0.00E+00
Xe138	0.00E+00
Particulates and Iodines (in solution)	
F-18	0.00E+00
Na-24	0.00E+00
Cr-51	0.00E+00
Mn-54	0.00E+00
Co-58	0.00E+00
Co-60	0.00E+00
I131	0.00E+00
I132	0.00E+00
I133	0.00E+00
I134	0.00E+00
I135	0.00E+00
Cs134	0.00E+00
Cs135	0.00E+00
Cs136	0.00E+00
Cs137	0.00E+00
Cs138	0.00E+00
Rb87	0.00E+00
Rb88	0.00E+00

REACTOR CONTAINMENT
BUILDING SUMP CHEMISTRY

RCB SUMP CHEMISTRY	
Real Time period start	7:30
Real Time Period end	7:44
Drill Time	0:30
Concentration (uCi/cc)	
ENTRAINED NOBLE GAS	
Ar41	3.29E-05
Kr85m	0.00E+00
Kr85	0.00E+00
Kr87	7.43E-07
Kr88	1.03E-06
Xe131m	0.00E+00
Xe133	3.57E-05
Xe133m	4.86E-07
Xe135	2.00E-06
Xe135m	7.14E-07
Xe138	2.04E-06
Particulates and Iodines (in solution)	
F-18	3.00E-02
Na-24	5.11E-04
Cr-51	2.45E-05
Mn-54	4.38E-05
Co-58	1.68E-04
Co-60	3.61E-05
I131	1.50E-04
I132	3.13E-05
I133	1.56E-04
I134	4.58E-04
I135	2.30E-04
Cs134	0.00E+00
Cs135	0.00E+00
Cs136	0.00E+00
Cs137	0.00E+00
Cs138	1.19E-03
Rb87	0.00E+00
Rb88	0.00E+00

REACTOR CONTAINMENT
BUILDING SUMP CHEMISTRY

RCB SUMP CHEMISTRY	
Real Time period start	7:45
Real Time Period end	7:59
Drill Time	0:45
Concentration (uCi/cc)	
ENTRAINED NOBLE GAS	
Ar41	2.99E-05
Kr85m	1.01E-10
Kr85	0.00E+00
Kr87	8.93E-10
Kr88	8.93E-10
Xe131m	0.00E+00
Xe133	1.78E-09
Xe133m	0.00E+00
Xe135	1.78E-09
Xe135m	8.93E-10
Xe138	3.56E-09
Particulates and Iodines (in solution)	
F-18	3.00E-02
Na-24	5.11E-04
Cr-51	2.45E-05
Mn-54	4.38E-05
Co-58	1.68E-04
Co-60	3.61E-05
I131	1.50E-04
I132	3.13E-05
I133	1.56E-04
I134	4.58E-04
I135	2.30E-04
Cs134	0.00E+00
Cs135	0.00E+00
Cs136	0.00E+00
Cs137	0.00E+00
Cs138	1.19E-03
Rb87	0.00E+00
Rb88	0.00E+00

REACTOR CONTAINMENT
BUILDING SUMP CHEMISTRY

RCB SUMP CHEMISTRY	
Real Time period start	8:00
Real Time Period end	8:14
Drill Time	1:00
Concentration (uCi/cc)	
ENTRAINED NOBLE GAS	
Ar41	2.72E-05
Kr85m	1.01E-10
Kr85	0.00E+00
Kr87	8.93E-10
Kr88	8.93E-10
Xe131m	0.00E+00
Xe133	1.78E-09
Xe133m	0.00E+00
Xe135	1.78E-09
Xe135m	8.93E-10
Xe138	3.56E-09
Particulates and Iodines (in solution)	
F-18	3.00E-02
Na-24	5.11E-04
Cr-51	2.45E-05
Mn-54	4.38E-05
Co-58	1.68E-04
Co-60	3.61E-05
I131	1.50E-08
I132	3.12E-07
I133	1.56E-07
I134	6.23E-07
I135	3.09E-07
Cs134	0.00E+00
Cs135	0.00E+00
Cs136	0.00E+00
Cs137	0.00E+00
Cs138	0.00E+00
Rb87	0.00E+00
Rb88	0.00E+00

REACTOR CONTAINMENT
BUILDING SUMP CHEMISTRY

RCB SUMP CHEMISTRY	
Real Time period start	8:15
Real Time Period end	8:29
Drill Time	1:15
Concentration (uCi/cc)	
ENTRAINED NOBLE GAS	
Ar41	2.47E-05
Kr85m	2.99E-03
Kr85	3.63E-04
Kr87	5.30E-03
Kr88	7.81E-03
Xe131m	7.77E-05
Xe133	2.32E-02
Xe133m	3.35E-03
Xe135	6.62E-03
Xe135m	4.30E-03
Xe138	1.50E-02
Particulates and Iodines (in solution)	
F-18	3.00E-02
Na-24	5.11E-04
Cr-51	2.45E-05
Mn-54	4.38E-05
Co-58	1.68E-04
Co-60	3.61E-05
I131	1.94E+00
I132	2.58E+00
I133	3.70E+00
I134	3.97E+00
I135	3.33E+00
Cs134	4.08E-01
Cs135	9.18E-12
Cs136	4.63E-02
Cs137	7.29E-02
Cs138	8.48E-01
Rb87	3.73E-16
Rb88	6.84E-01

REACTOR CONTAINMENT
BUILDING SUMP CHEMISTRY

RCB SUMP CHEMISTRY	
Real Time period start	8:30
Real Time Period end	8:44
Drill Time	1:30
Concentration (uCi/cc)	
ENTRAINED NOBLE GAS	
Ar41	2.25E-05
Kr85m	5.98E-03
Kr85	7.26E-04
Kr87	1.06E-02
Kr88	1.56E-02
Xe131m	1.55E-04
Xe133	4.64E-02
Xe133m	6.70E-03
Xe135	1.32E-02
Xe135m	8.59E-03
Xe138	3.00E-02
Particulates and Iodines (in solution)	
F-18	3.00E-02
Na-24	5.11E-04
Cr-51	2.45E-05
Mn-54	4.38E-05
Co-58	1.68E-04
Co-60	3.61E-05
I131	3.88E+00
I132	5.16E+00
I133	7.39E+00
I134	7.93E+00
I135	6.65E+00
Cs134	8.16E-01
Cs135	1.84E-11
Cs136	9.27E-02
Cs137	1.46E-01
Cs138	1.70E+00
Rb87	7.46E-16
Rb88	1.37E+00

REACTOR CONTAINMENT
BUILDING SUMP CHEMISTRY

RCB SUMP CHEMISTRY	
Real Time period start	8:45
Real Time Period end	8:59
Drill Time	1:45
Concentration (uCi/cc)	
ENTRAINED NOBLE GAS	
Ar41	2.04E-05
Kr85m	8.96E-03
Kr85	1.09E-03
Kr87	1.59E-02
Kr88	2.34E-02
Xe131m	2.33E-04
Xe133	6.96E-02
Xe133m	1.00E-02
Xe135	1.99E-02
Xe135m	1.29E-02
Xe138	4.50E-02
Particulates and Iodines (in solution)	
F-18	3.00E-02
Na-24	5.11E-04
Cr-51	2.45E-05
Mn-54	4.38E-05
Co-58	1.68E-04
Co-60	3.61E-05
I131	5.82E+00
I132	7.75E+00
I133	1.11E+01
I134	1.19E+01
I135	9.98E+00
Cs134	1.22E+00
Cs135	2.75E-11
Cs136	1.39E-01
Cs137	2.19E-01
Cs138	2.54E+00
Rb87	1.12E-15
Rb88	2.05E+00

REACTOR CONTAINMENT
BUILDING SUMP CHEMISTRY

RCB SUMP CHEMISTRY	
Real Time period start	9:00
Real Time Period end	9:14
Drill Time	2:00
Concentration (uCi/cc)	
ENTRAINED NOBLE GAS	
Ar41	1.86E-05
Kr85m	1.33E-02
Kr85	1.63E-03
Kr87	2.29E-02
Kr88	3.45E-02
Xe131m	3.50E-04
Xe133	1.04E-01
Xe133m	1.51E-02
Xe135	3.00E-02
Xe135m	1.82E-02
Xe138	5.44E-02
Particulates and Iodines (in solution)	
F-18	2.73E-02
Na-24	1.23E-06
Cr-51	2.47E-08
Mn-54	4.38E-08
Co-58	1.75E-07
Co-60	4.38E-08
I131	8.73E+00
I132	1.14E+01
I133	1.66E+01
I134	1.68E+01
I135	1.48E+01
Cs134	1.84E+00
Cs135	7.84E-11
Cs136	2.08E-01
Cs137	3.28E-01
Cs138	6.12E+00
Rb87	3.10E-15
Rb88	5.27E+00

REACTOR CONTAINMENT
BUILDING SUMP CHEMISTRY

RCB SUMP CHEMISTRY	
Real Time period start	9:15
Real Time Period end	9:29
Drill Time	2:15
Concentration (uCi/cc)	
ENTRAINED NOBLE GAS	
Ar41	1.69E-05
Kr85m	9.88E-02
Kr85	1.22E-02
Kr87	1.68E-01
Kr88	2.56E-01
Xe131m	2.61E-03
Xe133	7.80E-01
Xe133m	1.13E-01
Xe135	2.25E-01
Xe135m	1.33E-01
Xe138	3.77E-01
Particulates and Iodines (in solution)	
F-18	2.48E-02
Na-24	1.15E-06
Cr-51	2.33E-08
Mn-54	4.12E-08
Co-58	1.64E-07
Co-60	4.12E-08
I131	6.53E+01
I132	8.40E+01
I133	1.24E+02
I134	1.22E+02
I135	1.11E+02
Cs134	1.37E+01
Cs135	7.33E-10
Cs136	1.56E+00
Cs137	2.45E+00
Cs138	4.87E+01
Rb87	2.82E-14
Rb88	4.45E+01

REACTOR CONTAINMENT
BUILDING SUMP CHEMISTRY

RCB SUMP CHEMISTRY	
Real Time period start	9:30
Real Time Period end	9:44
Drill Time	2:30
Concentration (uCi/cc)	
ENTRAINED NOBLE GAS	
Ar41	1.53E-05
Kr85m	1.76E-01
Kr85	2.22E-02
Kr87	2.87E-01
Kr88	4.51E-01
Xe131m	4.75E-03
Xe133	1.41E+00
Xe133m	2.08E-01
Xe135	4.14E-01
Xe135m	2.27E-01
Xe138	5.23E-01
Particulates and Iodines (in solution)	
F-18	2.26E-02
Na-24	1.07E-06
Cr-51	2.19E-08
Mn-54	3.87E-08
Co-58	1.55E-07
Co-60	3.87E-08
I131	1.18E+02
I132	1.47E+02
I133	2.24E+02
I134	2.04E+02
I135	1.98E+02
Cs134	2.49E+01
Cs135	2.13E-09
Cs136	2.83E+00
Cs137	4.45E+00
Cs138	1.06E+02
Rb87	7.82E-14
Rb88	1.09E+02

REACTOR CONTAINMENT
BUILDING SUMP CHEMISTRY

RCB SUMP CHEMISTRY	
Real Time period start	9:45
Real Time Period end	9:59
Drill Time	2:45
Concentration (uCi/cc)	
ENTRAINED NOBLE GAS	
Ar41	1.39E-05
Kr85m	2.46E-01
Kr85	3.15E-02
Kr87	3.85E-01
Kr88	6.25E-01
Xe131m	6.75E-03
Xe133	2.01E+00
Xe133m	2.98E-01
Xe135	5.95E-01
Xe135m	3.07E-01
Xe138	5.88E-01
Particulates and Iodines (in solution)	
F-18	2.06E-02
Na-24	9.91E-07
Cr-51	2.06E-08
Mn-54	3.65E-08
Co-58	1.45E-07
Co-60	3.65E-08
I131	1.68E+02
I132	2.03E+02
I133	3.18E+02
I134	2.67E+02
I135	2.79E+02
Cs134	3.54E+01
Cs135	4.19E-09
Cs136	4.02E+00
Cs137	6.33E+00
Cs138	1.58E+02
Rb87	1.47E-13
Rb88	1.81E+02

REACTOR CONTAINMENT
BUILDING SUMP CHEMISTRY

RCB SUMP CHEMISTRY	
Real Time period start	10:00
Real Time Period end	10:14
Drill Time	3:00
Concentration (uCi/cc)	
ENTRAINED NOBLE GAS	
Ar41	7.05E-06
Kr85m	3.69E-01
Kr85	4.81E-02
Kr87	5.54E-01
Kr88	9.26E-01
Xe131m	1.03E-02
Xe133	3.06E+00
Xe133m	4.57E-01
Xe135	9.16E-01
Xe135m	4.49E-01
Xe138	7.35E-01
Particulates and Iodines (in solution)	
F-18	1.87E-02
Na-24	1.10E-06
Cr-51	2.31E-08
Mn-54	4.08E-08
Co-58	1.63E-07
Co-60	4.08E-08
I131	2.56E+02
I132	2.98E+02
I133	4.82E+02
I134	3.76E+02
I135	4.19E+02
Cs134	5.40E+01
Cs135	8.16E-09
Cs136	6.12E+00
Cs137	9.65E+00
Cs138	2.37E+02
Rb87	2.73E-13
Rb88	3.02E+02

REACTOR CONTAINMENT
BUILDING SUMP CHEMISTRY

RCB SUMP CHEMISTRY	
Real Time period start	10:15
Real Time Period end	10:29
Drill Time	3:15
Concentration (uCi/cc)	
ENTRAINED NOBLE GAS	
Ar41	1.61E-07
Kr85m	8.72E-01
Kr85	1.17E-01
Kr87	1.23E+00
Kr88	2.16E+00
Xe131m	2.50E-02
Xe133	7.43E+00
Xe133m	1.12E+00
Xe135	2.26E+00
Xe135m	1.03E+00
Xe138	1.23E+00
Particulates and Iodines (in solution)	
F-18	1.70E-02
Na-24	2.31E-06
Cr-51	4.90E-08
Mn-54	8.68E-08
Co-58	3.46E-07
Co-60	8.68E-08
I131	6.23E+02
I132	6.89E+02
I133	1.16E+03
I134	8.05E+02
I135	1.00E+03
Cs134	1.31E+02
Cs135	2.63E-08
Cs136	1.49E+01
Cs137	2.34E+01
Cs138	5.66E+02
Rb87	8.35E-13
Rb88	8.18E+02

REACTOR CONTAINMENT
BUILDING SUMP CHEMISTRY

RCB SUMP CHEMISTRY	
Real Time period start	10:30
Real Time Period end	10:44
Drill Time	3:30
Concentration (uCi/cc)	
ENTRAINED NOBLE GAS	
Ar41	8.58E-07
Kr85m	3.92E+00
Kr85	5.34E-01
Kr87	5.35E+00
Kr88	9.63E+00
Xe131m	1.14E-01
Xe133	3.39E+01
Xe133m	5.16E+00
Xe135	1.04E+01
Xe135m	4.62E+00
Xe138	5.37E+00
Particulates and Iodines (in solution)	
F-18	1.55E-02
Na-24	8.69E-06
Cr-51	1.87E-07
Mn-54	3.31E-07
Co-58	1.32E-06
Co-60	3.31E-07
I131	2.85E+03
I132	3.05E+03
I133	5.30E+03
I134	3.44E+03
I135	4.52E+03
Cs134	5.99E+02
Cs135	1.41E-07
Cs136	6.80E+01
Cs137	1.07E+02
Cs138	2.30E+03
Rb87	4.24E-12
Rb88	3.72E+03

REACTOR CONTAINMENT
BUILDING SUMP CHEMISTRY

RCB SUMP CHEMISTRY	
Real Time period start	10:45
Real Time Period end	10:59
Drill Time	3:45
Concentration (uCi/cc)	
ENTRAINED NOBLE GAS	
Ar41	1.55E-06
Kr85m	1.12E+00
Kr85	1.46E-01
Kr87	1.71E+00
Kr88	2.81E+00
Xe131m	3.12E-02
Xe133	9.27E+00
Xe133m	1.38E+00
Xe135	2.77E+00
Xe135m	1.44E+00
Xe138	3.21E+00
Particulates and Iodines (in solution)	
F-18	1.41E-02
Na-24	1.07E-06
Cr-51	2.32E-08
Mn-54	4.11E-08
Co-58	1.64E-07
Co-60	4.11E-08
I131	7.77E+02
I132	9.07E+02
I133	1.46E+03
I134	1.19E+03
I135	1.27E+03
Cs134	1.63E+02
Cs135	2.61E-08
Cs136	1.86E+01
Cs137	2.92E+01
Cs138	5.20E+02
Rb87	7.80E-13
Rb88	7.22E+02

REACTOR CONTAINMENT
BUILDING SUMP CHEMISTRY

RCB SUMP CHEMISTRY	
Real Time period start	11:00
Real Time Period end	11:14
Drill Time	4:00
Concentration (uCi/cc)	
ENTRAINED NOBLE GAS	
Ar41	1.41E-06
Kr85m	7.60E+00
Kr85	9.49E-01
Kr87	1.27E+01
Kr88	1.96E+01
Xe131m	2.03E-01
Xe133	6.05E+01
Xe133m	8.85E+00
Xe135	1.76E+01
Xe135m	1.01E+01
Xe138	2.67E+01
Particulates and Iodines (in solution)	
F-18	1.28E-02
Na-24	1.31E-07
Cr-51	2.87E-09
Mn-54	5.10E-09
Co-58	2.03E-08
Co-60	5.10E-09
I131	5.20E+02
I132	6.60E+02
I133	9.86E+02
I134	9.56E+02
I135	8.76E+02
Cs134	1.09E+02
Cs135	7.86E-09
Cs136	1.24E+01
Cs137	1.96E+01
Cs138	3.35E+02
Rb87	2.63E-13
Rb88	3.37E+02

REACTOR CONTAINMENT
BUILDING SUMP CHEMISTRY

RCB SUMP CHEMISTRY	
Real Time period start	11:15
Real Time Period end	11:29
Drill Time	4:15
Concentration (uCi/cc)	
ENTRAINED NOBLE GAS	
Ar41	1.29E-06
Kr85m	1.08E+01
Kr85	1.35E+00
Kr87	1.82E+01
Kr88	2.80E+01
Xe131m	2.89E-01
Xe133	8.62E+01
Xe133m	1.26E+01
Xe135	2.50E+01
Xe135m	1.44E+01
Xe138	3.85E+01
Particulates and Iodines (in solution)	
F-18	1.17E-02
Na-24	1.29E-07
Cr-51	5.94E-05
Mn-54	1.05E-04
Co-58	4.20E-04
Co-60	1.05E-04
I131	2.18E+04
I132	2.84E+04
I133	4.14E+04
I134	4.22E+04
I135	3.71E+04
Cs134	4.58E+03
Cs135	1.90E-07
Cs136	5.20E+02
Cs137	8.19E+02
Cs138	1.43E+04
Rb87	7.46E-12
Rb88	1.25E+04

REACTOR CONTAINMENT
BUILDING SUMP CHEMISTRY

RCB SUMP CHEMISTRY	
Real Time period start	11:30
Real Time Period end	11:44
Drill Time	4:30
Concentration (uCi/cc)	
ENTRAINED NOBLE GAS	
Ar41	1.17E-06
Kr85m	1.41E+01
Kr85	1.75E+00
Kr87	2.37E+01
Kr88	3.64E+01
Xe131m	3.75E-01
Xe133	1.12E+02
Xe133m	1.63E+01
Xe135	3.24E+01
Xe135m	1.88E+01
Xe138	5.02E+01
Particulates and Iodines (in solution)	
F-18	1.06E-02
Na-24	1.28E-07
Cr-51	3.77E-04
Mn-54	6.70E-04
Co-58	2.67E-03
Co-60	6.70E-04
I131	9.36E+03
I132	1.19E+04
I133	1.77E+04
I134	1.71E+04
I135	1.58E+04
Cs134	1.97E+03
Cs135	1.23E-07
Cs136	2.23E+02
Cs137	3.52E+02
Cs138	7.42E+03
Rb87	4.67E-12
Rb88	7.06E+03

REACTOR CONTAINMENT
BUILDING SUMP CHEMISTRY

RCB SUMP CHEMISTRY	
Real Time period start	11:45
Real Time Period end	11:59
Drill Time	4:45
Concentration (uCi/cc)	
ENTRAINED NOBLE GAS	
Ar41	1.06E-06
Kr85m	8.16E+00
Kr85	1.01E+00
Kr87	1.39E+01
Kr88	2.11E+01
Xe131m	2.16E-01
Xe133	6.45E+01
Xe133m	9.39E+00
Xe135	1.87E+01
Xe135m	1.11E+01
Xe138	3.19E+01
Particulates and Iodines (in solution)	
F-18	9.65E-03
Na-24	1.26E-07
Cr-51	6.95E-04
Mn-54	1.23E-03
Co-58	4.92E-03
Co-60	1.24E-03
I131	5.40E+03
I132	6.93E+03
I133	1.02E+04
I134	1.01E+04
I135	9.14E+03
Cs134	1.13E+03
Cs135	6.40E-08
Cs136	1.29E+02
Cs137	2.03E+02
Cs138	3.76E+03
Rb87	2.40E-12
Rb88	3.58E+03

REACTOR CONTAINMENT
BUILDING SUMP CHEMISTRY

RCB SUMP CHEMISTRY	
Real Time period start	12:00
Real Time Period end	12:14
Drill Time	5:00
Concentration (uCi/cc)	
ENTRAINED NOBLE GAS	
Ar41	9.66E-07
Kr85m	7.45E+00
Kr85	9.19E-01
Kr87	1.28E+01
Kr88	1.93E+01
Xe131m	1.97E-01
Xe133	5.86E+01
Xe133m	8.52E+00
Xe135	1.69E+01
Xe135m	1.02E+01
Xe138	3.08E+01
Particulates and Iodines (in solution)	
F-18	8.78E-03
Na-24	1.25E-07
Cr-51	4.41E-03
Mn-54	7.84E-03
Co-58	3.12E-02
Co-60	7.84E-03
I131	4.91E+03
I132	6.36E+03
I133	9.33E+03
I134	9.38E+03
I135	8.33E+03
Cs134	1.03E+03
Cs135	4.94E-08
Cs136	1.17E+02
Cs137	1.84E+02
Cs138	3.22E+03
Rb87	1.88E-12
Rb88	2.94E+03

RCB SUMP CHEMISTRY	
Real Time period start	12:15
Real Time Period end	12:29
Drill Time	5:15
Concentration (uCi/cc)	
ENTRAINED NOBLE GAS	
Ar41	8.78E-07
Kr85m	7.37E+00
Kr85	9.07E-01
Kr87	1.27E+01
Kr88	1.91E+01
Xe131m	1.94E-01
Xe133	5.79E+01
Xe133m	8.41E+00
Xe135	1.67E+01
Xe135m	1.01E+01
Xe138	3.07E+01
Particulates and Iodines (in solution)	
F-18	7.99E-03
Na-24	1.23E-07
Cr-51	8.12E-03
Mn-54	1.44E-02
Co-58	5.75E-02
Co-60	1.44E-02
I131	4.85E+03
I132	6.29E+03
I133	9.21E+03
I134	9.31E+03
I135	8.23E+03
Cs134	1.02E+03
Cs135	4.66E-08
Cs136	1.16E+02
Cs137	1.82E+02
Cs138	3.15E+03
Rb87	1.79E-12
Rb88	2.85E+03

REACTOR CONTAINMENT
BUILDING SUMP CHEMISTRY

RCB SUMP CHEMISTRY	
Real Time period start	12:30
Real Time Period end	12:44
Drill Time	5:30
Concentration (uCi/cc)	
ENTRAINED NOBLE GAS	
Ar41	7.98E-07
Kr85m	7.36E+00
Kr85	9.06E-01
Kr87	1.27E+01
Kr88	1.91E+01
Xe131m	1.94E-01
Xe133	5.78E+01
Xe133m	8.40E+00
Xe135	1.67E+01
Xe135m	1.01E+01
Xe138	3.07E+01
Particulates and Iodines (in solution)	
F-18	7.27E-03
Na-24	1.22E-07
Cr-51	5.14E-02
Mn-54	9.15E-02
Co-58	3.64E-01
Co-60	9.15E-02
I131	4.84E+03
I132	6.28E+03
I133	9.20E+03
I134	9.30E+03
I135	8.22E+03
Cs134	1.02E+03
Cs135	4.62E-08
Cs136	1.16E+02
Cs137	1.82E+02
Cs138	3.15E+03
Rb87	1.78E-12
Rb88	2.84E+03

REACTOR CONTAINMENT
BUILDING SUMP CHEMISTRY

RCB SUMP CHEMISTRY	
Real Time period start	12:45
Real Time Period end	12:59
Drill Time	5:45
Concentration (uCi/cc)	
ENTRAINED NOBLE GAS	
Ar41	7.26E-07
Kr85m	7.36E+00
Kr85	9.06E-01
Kr87	1.27E+01
Kr88	1.91E+01
Xe131m	1.94E-01
Xe133	5.78E+01
Xe133m	8.40E+00
Xe135	1.67E+01
Xe135m	1.01E+01
Xe138	3.07E+01
Particulates and Iodines (in solution)	
F-18	6.61E-03
Na-24	1.21E-07
Cr-51	9.48E-02
Mn-54	1.69E-01
Co-58	6.71E-01
Co-60	1.69E-01
I131	4.84E+03
I132	6.28E+03
I133	9.20E+03
I134	9.30E+03
I135	8.22E+03
Cs134	1.02E+03
Cs135	4.61E-08
Cs136	1.16E+02
Cs137	1.82E+02
Cs138	3.15E+03
Rb87	1.78E-12
Rb88	2.84E+03

REACTOR CONTAINMENT
BUILDING SUMP CHEMISTRY

RCB SUMP CHEMISTRY	
Real Time period start	13:00
Real Time Period end	13:14
Drill Time	6:00
Concentration (uCi/cc)	
ENTRAINED NOBLE GAS	
Ar41	6.60E-07
Kr85m	7.36E+00
Kr85	9.06E-01
Kr87	1.27E+01
Kr88	1.91E+01
Xe131m	1.94E-01
Xe133	5.78E+01
Xe133m	8.40E+00
Xe135	1.67E+01
Xe135m	1.01E+01
Xe138	3.07E+01
Particulates and Iodines (in solution)	
F-18	6.02E-03
Na-24	1.19E-07
Cr-51	2.91E-01
Mn-54	5.18E-01
Co-58	2.06E+00
Co-60	5.18E-01
I131	4.84E+03
I132	6.28E+03
I133	9.20E+03
I134	9.30E+03
I135	8.22E+03
Cs134	1.02E+03
Cs135	4.61E-08
Cs136	1.16E+02
Cs137	1.82E+02
Cs138	3.15E+03
Rb87	1.78E-12
Rb88	2.84E+03

REACTOR CONTAINMENT
BUILDING SUMP CHEMISTRY

RCB SUMP CHEMISTRY	
Real Time period start	13:15
Real Time Period end	13:29
Drill Time	6:15
Concentration (uCi/cc)	
ENTRAINED NOBLE GAS	
Ar41	6.00E-07
Kr85m	3.62E+00
Kr85	4.52E-01
Kr87	6.04E+00
Kr88	9.33E+00
Xe131m	9.67E-02
Xe133	2.88E+01
Xe133m	4.21E+00
Xe135	8.38E+00
Xe135m	4.75E+00
Xe138	1.20E+01
Particulates and Iodines (in solution)	
F-18	5.47E-03
Na-24	1.18E-07
Cr-51	4.87E-01
Mn-54	8.67E-01
Co-58	3.45E+00
Co-60	8.68E-01
I131	2.41E+03
I132	3.06E+03
I133	4.57E+03
I134	4.34E+03
I135	4.06E+03
Cs134	5.07E+02
Cs135	3.46E-08
Cs136	5.76E+01
Cs137	9.07E+01
Cs138	2.09E+03
Rb87	1.31E-12
Rb88	1.98E+03

REACTOR CONTAINMENT
BUILDING SUMP CHEMISTRY

RCB SUMP CHEMISTRY	
Real Time period start	13:30
Real Time Period end	13:44
Drill Time	6:30
Concentration (uCi/cc)	
ENTRAINED NOBLE GAS	
Ar41	5.45E-07
Kr85m	4.32E-01
Kr85	5.61E-02
Kr87	6.53E-01
Kr88	1.09E+00
Xe131m	1.20E-02
Xe133	3.57E+00
Xe133m	5.31E-01
Xe135	1.07E+00
Xe135m	5.15E-01
Xe138	7.11E-01
Particulates and Iodines (in solution)	
F-18	4.98E-03
Na-24	1.16E-07
Cr-51	4.87E-01
Mn-54	8.67E-01
Co-58	3.45E+00
Co-60	8.68E-01
I131	2.99E+02
I132	3.51E+02
I133	5.63E+02
I134	4.42E+02
I135	4.91E+02
Cs134	6.30E+01
Cs135	8.70E-09
Cs136	7.15E+00
Cs137	1.13E+01
Cs138	3.27E+02
Rb87	3.07E-13
Rb88	3.80E+02

REACTOR CONTAINMENT BUILDING ATMOSPHERE RADIOACTIVITY

RCB Atmosphere	
Real Time period start	7:00
Real Time Period end	7:29
Drill Time	0:00
Concentration (uCi/cc)	
Noble Gases	
Ar41	0.00E+00
Kr85m	0.00E+00
Kr85	0.00E+00
Kr87	0.00E+00
Kr88	0.00E+00
Xe131m	0.00E+00
Xe133	0.00E+00
Xe133m	0.00E+00
Xe135	0.00E+00
Xe135m	0.00E+00
Xe138	0.00E+00
Particulates and Iodines	
F-18	0.00E+00
Na-24	0.00E+00
Cr-51	0.00E+00
Mn-54	0.00E+00
Co-58	0.00E+00
Co-60	0.00E+00
I131	0.00E+00
I132	0.00E+00
I133	0.00E+00
I134	0.00E+00
I135	0.00E+00
Cs134	0.00E+00
Cs135	0.00E+00
Cs136	0.00E+00
Cs137	0.00E+00
Cs138	0.00E+00
Rb87	0.00E+00
Rb88	0.00E+00

REACTOR CONTAINMENT BUILDING ATMOSPHERE RADIOACTIVITY

RCB Atmosphere	
Real Time period start	7:30
Real Time Period end	7:44
Drill Time	0:30
Concentration (uCi/cc)	
Noble Gases	
Ar41	5.97E-07
Kr85m	2.02E-12
Kr85	0.00E+00
Kr87	1.79E-11
Kr88	1.79E-11
Xe131m	0.00E+00
Xe133	3.56E-11
Xe133m	0.00E+00
Xe135	3.56E-11
Xe135m	1.79E-11
Xe138	7.12E-11
Particulates and Iodines	
F-18	1.46E-07
Na-24	8.90E-10
Cr-51	4.27E-11
Mn-54	7.62E-11
Co-58	2.93E-10
Co-60	6.28E-11
I131	1.71E-10
I132	3.57E-11
I133	1.79E-10
I134	5.23E-10
I135	2.63E-10
Cs134	0.00E+00
Cs135	0.00E+00
Cs136	0.00E+00
Cs137	0.00E+00
Cs138	2.07E-09
Rb87	0.00E+00
Rb88	0.00E+00

REACTOR CONTAINMENT BUILDING ATMOSPHERE RADIOACTIVITY

RCB Atmosphere	
Real Time period start	7:45
Real Time Period end	7:59
Drill Time	0:45
Concentration (uCi/cc)	
Noble Gases	
Ar41	5.43E-06
Kr85m	2.02E-11
Kr85	0.00E+00
Kr87	1.79E-10
Kr88	1.79E-10
Xe131m	0.00E+00
Xe133	3.56E-10
Xe133m	0.00E+00
Xe135	3.56E-10
Xe135m	1.79E-10
Xe138	7.12E-10
Particulates and Iodines	
F-18	1.46E-07
Na-24	8.90E-10
Cr-51	4.27E-11
Mn-54	7.62E-11
Co-58	2.93E-10
Co-60	6.28E-11
I131	1.72E-14
I132	3.56E-13
I133	1.79E-13
I134	7.12E-13
I135	3.53E-13
Cs134	0.00E+00
Cs135	0.00E+00
Cs136	0.00E+00
Cs137	0.00E+00
Cs138	0.00E+00
Rb87	0.00E+00
Rb88	0.00E+00

REACTOR CONTAINMENT BUILDING ATMOSPHERE RADIOACTIVITY

RCB Atmosphere	
Real Time period start	8:00
Real Time Period end	8:14
Drill Time	1:00
Concentration (uCi/cc)	
Noble Gases	
Ar41	4.94E-06
Kr85m	5.98E-04
Kr85	7.26E-05
Kr87	1.06E-03
Kr88	1.56E-03
Xe131m	1.55E-05
Xe133	4.64E-03
Xe133m	6.70E-04
Xe135	1.32E-03
Xe135m	8.59E-04
Xe138	3.00E-03
Particulates and Iodines	
F-18	1.46E-06
Na-24	8.90E-09
Cr-51	4.27E-10
Mn-54	7.62E-10
Co-58	2.93E-09
Co-60	6.28E-10
I131	2.22E-05
I132	2.95E-05
I133	4.23E-05
I134	4.53E-05
I135	3.80E-05
Cs134	7.11E-06
Cs135	1.60E-16
Cs136	8.07E-07
Cs137	1.27E-06
Cs138	1.48E-05
Rb87	6.50E-21
Rb88	1.19E-05

REACTOR CONTAINMENT BUILDING ATMOSPHERE RADIOACTIVITY

RCB Atmosphere	
Real Time period start	8:15
Real Time Period end	8:29
Drill Time	1:15
Concentration (uCi/cc)	
Noble Gases	
Ar41	4.49E-06
Kr85m	1.20E-03
Kr85	1.45E-04
Kr87	2.12E-03
Kr88	3.12E-03
Xe131m	3.11E-05
Xe133	9.28E-03
Xe133m	1.34E-03
Xe135	2.65E-03
Xe135m	1.72E-03
Xe138	6.00E-03
Particulates and Iodines	
F-18	1.46E-06
Na-24	8.90E-09
Cr-51	4.27E-10
Mn-54	7.62E-10
Co-58	2.93E-09
Co-60	6.28E-10
I131	4.44E-05
I132	5.90E-05
I133	8.45E-05
I134	9.07E-05
I135	7.60E-05
Cs134	1.42E-05
Cs135	3.20E-16
Cs136	1.61E-06
Cs137	2.54E-06
Cs138	2.95E-05
Rb87	1.30E-20
Rb88	2.38E-05

REACTOR CONTAINMENT BUILDING ATMOSPHERE RADIOACTIVITY

RCB Atmosphere	
Real Time period start	8:30
Real Time Period end	8:44
Drill Time	1:30
Concentration (uCi/cc)	
Noble Gases	
Ar41	4.08E-06
Kr85m	1.79E-03
Kr85	2.18E-04
Kr87	3.18E-03
Kr88	4.69E-03
Xe131m	4.66E-05
Xe133	1.39E-02
Xe133m	2.01E-03
Xe135	3.97E-03
Xe135m	2.58E-03
Xe138	8.99E-03
Particulates and Iodines	
F-18	1.46E-06
Na-24	8.90E-09
Cr-51	4.27E-10
Mn-54	7.62E-10
Co-58	2.93E-09
Co-60	6.28E-10
I131	6.66E-05
I132	8.85E-05
I133	1.27E-04
I134	1.36E-04
I135	1.14E-04
Cs134	2.13E-05
Cs135	4.80E-16
Cs136	2.42E-06
Cs137	3.81E-06
Cs138	4.43E-05
Rb87	1.95E-20
Rb88	3.57E-05

REACTOR CONTAINMENT BUILDING ATMOSPHERE RADIOACTIVITY

RCB Atmosphere	
Real Time period start	8:45
Real Time Period end	8:59
Drill Time	1:45
Concentration (uCi/cc)	
Noble Gases	
Ar41	3.71E-06
Kr85m	2.66E-03
Kr85	3.27E-04
Kr87	4.58E-03
Kr88	6.90E-03
Xe131m	6.99E-05
Xe133	2.09E-02
Xe133m	3.03E-03
Xe135	6.00E-03
Xe135m	3.64E-03
Xe138	1.09E-02
Particulates and Iodines	
F-18	1.33E-06
Na-24	2.14E-11
Cr-51	4.31E-13
Mn-54	7.62E-13
Co-58	3.04E-12
Co-60	7.62E-13
I131	9.98E-05
I132	1.30E-04
I133	1.90E-04
I134	1.92E-04
I135	1.70E-04
Cs134	3.20E-05
Cs135	1.37E-15
Cs136	3.63E-06
Cs137	5.72E-06
Cs138	1.07E-04
Rb87	5.41E-20
Rb88	9.19E-05

REACTOR CONTAINMENT BUILDING ATMOSPHERE RADIOACTIVITY

RCB Atmosphere	
Real Time period start	9:00
Real Time Period end	9:14
Drill Time	2:00
Concentration (uCi/cc)	
Noble Gases	
Ar41	3.37E-06
Kr85m	1.98E-02
Kr85	2.44E-03
Kr87	3.36E-02
Kr88	5.11E-02
Xe131m	5.23E-04
Xe133	1.56E-01
Xe133m	2.27E-02
Xe135	4.51E-02
Xe135m	2.67E-02
Xe138	7.55E-02
Particulates and Iodines	
F-18	1.21E-06
Na-24	2.00E-11
Cr-51	4.05E-13
Mn-54	7.17E-13
Co-58	2.86E-12
Co-60	7.17E-13
I131	7.46E-04
I132	9.60E-04
I133	1.42E-03
I134	1.40E-03
I135	1.26E-03
Cs134	2.39E-04
Cs135	1.28E-14
Cs136	2.71E-05
Cs137	4.27E-05
Cs138	8.48E-04
Rb87	4.92E-19
Rb88	7.76E-04

REACTOR CONTAINMENT BUILDING ATMOSPHERE RADIOACTIVITY

RCB Atmosphere	
Real Time period start	9:15
Real Time Period end	9:29
Drill Time	2:15
Concentration (uCi/cc)	
Noble Gases	
Ar41	3.07E-05
Kr85m	3.52E-01
Kr85	4.44E-02
Kr87	5.74E-01
Kr88	9.03E-01
Xe131m	9.49E-03
Xe133	2.83E+00
Xe133m	4.15E-01
Xe135	8.27E-01
Xe135m	4.53E-01
Xe138	1.05E+00
Particulates and Iodines	
F-18	1.10E-06
Na-24	1.86E-11
Cr-51	3.81E-13
Mn-54	6.75E-13
Co-58	2.69E-12
Co-60	6.75E-13
I131	1.35E-03
I132	1.68E-03
I133	2.56E-03
I134	2.33E-03
I135	2.27E-03
Cs134	4.34E-04
Cs135	3.71E-14
Cs136	4.93E-05
Cs137	7.76E-05
Cs138	1.85E-03
Rb87	1.36E-18
Rb88	1.90E-03

REACTOR CONTAINMENT BUILDING ATMOSPHERE RADIOACTIVITY

RCB Atmosphere	
Real Time period start	9:30
Real Time Period end	9:44
Drill Time	2:30
Concentration (uCi/cc)	
Noble Gases	
Ar41	2.74E-05
Kr85m	4.84E-01
Kr85	6.20E-02
Kr87	7.57E-01
Kr88	1.23E+00
Xe131m	1.33E-02
Xe133	3.95E+00
Xe133m	5.85E-01
Xe135	1.17E+00
Xe135m	6.03E-01
Xe138	1.16E+00
Particulates and Iodines	
F-18	1.00E-05
Na-24	1.73E-10
Cr-51	3.59E-12
Mn-54	6.35E-12
Co-58	2.53E-11
Co-60	6.35E-12
I131	2.59E-01
I132	3.12E-01
I133	4.88E-01
I134	4.11E-01
I135	4.29E-01
Cs134	6.17E-03
Cs135	7.30E-13
Cs136	7.01E-04
Cs137	1.10E-03
Cs138	2.76E-02
Rb87	2.56E-17
Rb88	3.16E-02

REACTOR CONTAINMENT BUILDING ATMOSPHERE RADIOACTIVITY

RCB Atmosphere	
Real Time period start	9:45
Real Time Period end	9:59
Drill Time	2:45
Concentration (uCi/cc)	
Noble Gases	
Ar41	1.39E-05
Kr85m	7.25E-01
Kr85	9.45E-02
Kr87	1.09E+00
Kr88	1.82E+00
Xe131m	2.02E-02
Xe133	6.02E+00
Xe133m	8.98E-01
Xe135	1.80E+00
Xe135m	8.83E-01
Xe138	1.45E+00
Particulates and Iodines	
F-18	9.12E-06
Na-24	1.91E-10
Cr-51	4.02E-12
Mn-54	7.12E-12
Co-58	2.84E-11
Co-60	7.12E-12
I131	3.95E-01
I132	4.59E-01
I133	7.41E-01
I134	5.78E-01
I135	6.45E-01
Cs134	9.40E-03
Cs135	1.42E-12
Cs136	1.07E-03
Cs137	1.68E-03
Cs138	4.14E-02
Rb87	4.75E-17
Rb88	5.25E-02

REACTOR CONTAINMENT BUILDING ATMOSPHERE RADIOACTIVITY

RCB Atmosphere	
Real Time period start	10:00
Real Time Period end	10:14
Drill Time	3:00
Concentration (uCi/cc)	
Noble Gases	
Ar41	3.16E-07
Kr85m	1.72E+00
Kr85	2.30E-01
Kr87	2.42E+00
Kr88	4.25E+00
Xe131m	4.91E-02
Xe133	1.46E+01
Xe133m	2.20E+00
Xe135	4.44E+00
Xe135m	2.02E+00
Xe138	2.42E+00
Particulates and Iodines	
F-18	8.30E-06
Na-24	4.02E-10
Cr-51	8.53E-12
Mn-54	1.51E-11
Co-58	6.03E-11
Co-60	1.51E-11
I131	9.58E-01
I132	1.06E+00
I133	1.79E+00
I134	1.24E+00
I135	1.54E+00
Cs134	2.28E-02
Cs135	4.58E-12
Cs136	2.59E-03
Cs137	4.08E-03
Cs138	9.86E-02
Rb87	1.46E-16
Rb88	1.42E-01

REACTOR CONTAINMENT BUILDING ATMOSPHERE RADIOACTIVITY

RCB Atmosphere	
Real Time period start	10:15
Real Time Period end	10:29
Drill Time	3:15
Concentration (uCi/cc)	
Noble Gases	
Ar41	1.69E-06
Kr85m	7.71E+00
Kr85	1.05E+00
Kr87	1.05E+01
Kr88	1.89E+01
Xe131m	2.25E-01
Xe133	6.67E+01
Xe133m	1.01E+01
Xe135	2.05E+01
Xe135m	9.08E+00
Xe138	1.06E+01
Particulates and Iodines	
F-18	7.55E-06
Na-24	1.51E-09
Cr-51	3.25E-11
Mn-54	5.77E-11
Co-58	2.30E-10
Co-60	5.77E-11
I131	4.38E+00
I132	4.70E+00
I133	8.15E+00
I134	5.30E+00
I135	6.96E+00
Cs134	1.04E-01
Cs135	2.45E-11
Cs136	1.18E-02
Cs137	1.87E-02
Cs138	4.00E-01
Rb87	7.39E-16
Rb88	6.49E-01

REACTOR CONTAINMENT BUILDING ATMOSPHERE RADIOACTIVITY

RCB Atmosphere	
Real Time period start	10:30
Real Time Period end	10:44
Drill Time	3:30
Concentration (uCi/cc)	
Noble Gases	
Ar41	3.06E-06
Kr85m	2.19E+00
Kr85	2.86E-01
Kr87	3.36E+00
Kr88	5.53E+00
Xe131m	6.13E-02
Xe133	1.82E+01
Xe133m	2.72E+00
Xe135	5.45E+00
Xe135m	2.82E+00
Xe138	6.31E+00
Particulates and Iodines	
F-18	6.87E-06
Na-24	1.86E-10
Cr-51	4.04E-12
Mn-54	7.16E-12
Co-58	2.85E-11
Co-60	7.16E-12
I131	1.20E+00
I132	1.40E+00
I133	2.24E+00
I134	1.82E+00
I135	1.95E+00
Cs134	2.85E-02
Cs135	4.54E-12
Cs136	3.23E-03
Cs137	5.09E-03
Cs138	9.05E-02
Rb87	1.36E-16
Rb88	1.26E-01

REACTOR CONTAINMENT BUILDING ATMOSPHERE RADIOACTIVITY

RCB Atmosphere	
Real Time period start	10:45
Real Time Period end	10:59
Drill Time	3:45
Concentration (uCi/cc)	
Noble Gases	
Ar41	2.78E-06
Kr85m	1.50E+01
Kr85	1.87E+00
Kr87	2.50E+01
Kr88	3.85E+01
Xe131m	3.99E-01
Xe133	1.19E+02
Xe133m	1.74E+01
Xe135	3.46E+01
Xe135m	1.98E+01
Xe138	5.25E+01
Particulates and Iodines	
F-18	6.25E-06
Na-24	2.28E-11
Cr-51	5.01E-13
Mn-54	8.88E-13
Co-58	3.54E-12
Co-60	8.88E-13
I131	8.01E-01
I132	1.02E+00
I133	1.52E+00
I134	1.47E+00
I135	1.35E+00
Cs134	1.91E-02
Cs135	1.37E-12
Cs136	2.16E-03
Cs137	3.41E-03
Cs138	5.83E-02
Rb87	4.58E-17
Rb88	5.88E-02

REACTOR CONTAINMENT BUILDING ATMOSPHERE RADIOACTIVITY

RCB Atmosphere	
Real Time period start	11:00
Real Time Period end	11:14
Drill Time	4:00
Concentration (uCi/cc)	
Noble Gases	
Ar41	2.53E-06
Kr85m	2.13E+01
Kr85	2.65E+00
Kr87	3.57E+01
Kr88	5.50E+01
Xe131m	5.68E-01
Xe133	1.69E+02
Xe133m	2.47E+01
Xe135	4.92E+01
Xe135m	2.84E+01
Xe138	7.56E+01
Particulates and Iodines	
F-18	5.69E-06
Na-24	2.25E-11
Cr-51	1.03E-08
Mn-54	1.84E-08
Co-58	7.32E-08
Co-60	1.84E-08
I131	3.35E+01
I132	4.37E+01
I133	6.37E+01
I134	6.50E+01
I135	5.70E+01
Cs134	7.98E-01
Cs135	3.31E-11
Cs136	9.06E-02
Cs137	1.43E-01
Cs138	2.49E+00
Rb87	1.30E-15
Rb88	2.17E+00

REACTOR CONTAINMENT BUILDING ATMOSPHERE RADIOACTIVITY

RCB Atmosphere	
Real Time period start	11:15
Real Time Period end	11:29
Drill Time	4:15
Concentration (uCi/cc)	
Noble Gases	
Ar41	2.30E-06
Kr85m	2.77E+01
Kr85	3.44E+00
Kr87	4.65E+01
Kr88	7.15E+01
Xe131m	7.37E-01
Xe133	2.20E+02
Xe133m	3.21E+01
Xe135	6.37E+01
Xe135m	3.69E+01
Xe138	9.88E+01
Particulates and Iodines	
F-18	5.17E-06
Na-24	2.23E-11
Cr-51	6.57E-08
Mn-54	1.17E-07
Co-58	4.65E-07
Co-60	1.17E-07
I131	1.44E+01
I132	1.83E+01
I133	2.73E+01
I134	2.64E+01
I135	2.43E+01
Cs134	3.43E-01
Cs135	2.15E-11
Cs136	3.89E-02
Cs137	6.13E-02
Cs138	1.29E+00
Rb87	8.14E-16
Rb88	1.23E+00

REACTOR CONTAINMENT BUILDING ATMOSPHERE RADIOACTIVITY

RCB Atmosphere	
Real Time period start	11:30
Real Time Period end	11:44
Drill Time	4:30
Concentration (uCi/cc)	
Noble Gases	
Ar41	2.09E-06
Kr85m	1.60E+01
Kr85	1.99E+00
Kr87	2.72E+01
Kr88	4.15E+01
Xe131m	4.25E-01
Xe133	1.27E+02
Xe133m	1.85E+01
Xe135	3.67E+01
Xe135m	2.18E+01
Xe138	6.27E+01
Particulates and Iodines	
F-18	4.71E-06
Na-24	2.20E-11
Cr-51	1.21E-07
Mn-54	2.15E-07
Co-58	8.57E-07
Co-60	2.15E-07
I131	8.31E+00
I132	1.07E+01
I133	1.58E+01
I134	1.55E+01
I135	1.41E+01
Cs134	1.98E-01
Cs135	1.11E-11
Cs136	2.25E-02
Cs137	3.54E-02
Cs138	6.55E-01
Rb87	4.18E-16
Rb88	6.23E-01

REACTOR CONTAINMENT BUILDING ATMOSPHERE RADIOACTIVITY

RCB Atmosphere	
Real Time period start	11:45
Real Time Period end	11:59
Drill Time	4:45
Concentration (uCi/cc)	
Noble Gases	
Ar41	1.90E-06
Kr85m	1.47E+01
Kr85	1.81E+00
Kr87	2.52E+01
Kr88	3.80E+01
Xe131m	3.87E-01
Xe133	1.15E+02
Xe133m	1.68E+01
Xe135	3.32E+01
Xe135m	2.01E+01
Xe138	6.05E+01
Particulates and Iodines	
F-18	4.28E-06
Na-24	2.18E-11
Cr-51	7.68E-07
Mn-54	1.37E-06
Co-58	5.44E-06
Co-60	1.37E-06
I131	7.55E+00
I132	9.78E+00
I133	1.43E+01
I134	1.44E+01
I135	1.28E+01
Cs134	1.80E-01
Cs135	8.60E-12
Cs136	2.04E-02
Cs137	3.21E-02
Cs138	5.60E-01
Rb87	3.28E-16
Rb88	5.12E-01

REACTOR CONTAINMENT BUILDING ATMOSPHERE RADIOACTIVITY

RCB Atmosphere	
Real Time period start	12:00
Real Time Period end	12:14
Drill Time	5:00
Concentration (uCi/cc)	
Noble Gases	
Ar41	1.73E-06
Kr85m	1.45E+01
Kr85	1.78E+00
Kr87	2.49E+01
Kr88	3.76E+01
Xe131m	3.82E-01
Xe133	1.14E+02
Xe133m	1.65E+01
Xe135	3.28E+01
Xe135m	1.99E+01
Xe138	6.04E+01
Particulates and Iodines	
F-18	3.90E-06
Na-24	2.15E-11
Cr-51	1.42E-06
Mn-54	2.52E-06
Co-58	1.00E-05
Co-60	2.52E-06
I131	7.46E+00
I132	9.68E+00
I133	1.42E+01
I134	1.43E+01
I135	1.27E+01
Cs134	1.78E-01
Cs135	8.13E-12
Cs136	2.02E-02
Cs137	3.17E-02
Cs138	5.50E-01
Rb87	3.12E-16
Rb88	4.96E-01

REACTOR CONTAINMENT BUILDING ATMOSPHERE RADIOACTIVITY

RCB Atmosphere	
Real Time period start	12:15
Real Time Period end	12:29
Drill Time	5:15
Concentration (uCi/cc)	
Noble Gases	
Ar41	1.57E-06
Kr85m	1.45E+01
Kr85	1.78E+00
Kr87	2.49E+01
Kr88	3.76E+01
Xe131m	3.81E-01
Xe133	1.14E+02
Xe133m	1.65E+01
Xe135	3.27E+01
Xe135m	1.99E+01
Xe138	6.04E+01
Particulates and Iodines	
F-18	3.55E-06
Na-24	2.13E-11
Cr-51	8.96E-06
Mn-54	1.59E-05
Co-58	6.35E-05
Co-60	1.59E-05
I131	7.45E+00
I132	9.67E+00
I133	1.42E+01
I134	1.43E+01
I135	1.27E+01
Cs134	1.77E-01
Cs135	8.05E-12
Cs136	2.01E-02
Cs137	3.17E-02
Cs138	5.48E-01
Rb87	3.10E-16
Rb88	4.94E-01

REACTOR CONTAINMENT BUILDING ATMOSPHERE RADIOACTIVITY

RCB Atmosphere	
Real Time period start	12:30
Real Time Period end	12:44
Drill Time	5:30
Concentration (uCi/cc)	
Noble Gases	
Ar41	1.43E-06
Kr85m	1.45E+01
Kr85	1.78E+00
Kr87	2.49E+01
Kr88	3.75E+01
Xe131m	3.81E-01
Xe133	1.14E+02
Xe133m	1.65E+01
Xe135	3.27E+01
Xe135m	1.99E+01
Xe138	6.04E+01
Particulates and Iodines	
F-18	3.23E-06
Na-24	2.10E-11
Cr-51	1.65E-05
Mn-54	2.94E-05
Co-58	1.17E-04
Co-60	2.94E-05
I131	7.45E+00
I132	9.67E+00
I133	1.41E+01
I134	1.43E+01
I135	1.26E+01
Cs134	1.77E-01
Cs135	8.03E-12
Cs136	2.01E-02
Cs137	3.17E-02
Cs138	5.48E-01
Rb87	3.10E-16
Rb88	4.94E-01

REACTOR CONTAINMENT BUILDING ATMOSPHERE RADIOACTIVITY

RCB Atmosphere	
Real Time period start	12:45
Real Time Period end	12:59
Drill Time	5:45
Concentration (uCi/cc)	
Noble Gases	
Ar41	1.30E-06
Kr85m	1.45E+01
Kr85	1.78E+00
Kr87	2.49E+01
Kr88	3.75E+01
Xe131m	3.81E-01
Xe133	1.14E+02
Xe133m	1.65E+01
Xe135	3.27E+01
Xe135m	1.99E+01
Xe138	6.04E+01
Particulates and Iodines	
F-18	2.93E-06
Na-24	2.08E-11
Cr-51	5.07E-05
Mn-54	9.02E-05
Co-58	3.59E-04
Co-60	9.03E-05
I131	7.45E+00
I132	9.67E+00
I133	1.41E+01
I134	1.43E+01
I135	1.26E+01
Cs134	1.77E-01
Cs135	8.03E-12
Cs136	2.01E-02
Cs137	3.17E-02
Cs138	5.48E-01
Rb87	3.10E-16
Rb88	4.94E-01

REACTOR CONTAINMENT BUILDING ATMOSPHERE RADIOACTIVITY

RCB Atmosphere	
Real Time period start	13:00
Real Time Period end	13:14
Drill Time	6:00
Concentration (uCi/cc)	
Noble Gases	
Ar41	1.18E-06
Kr85m	7.12E+00
Kr85	8.88E-01
Kr87	1.19E+01
Kr88	1.83E+01
Xe131m	1.90E-01
Xe133	5.67E+01
Xe133m	8.28E+00
Xe135	1.65E+01
Xe135m	9.35E+00
Xe138	2.36E+01
Particulates and Iodines	
F-18	2.67E-06
Na-24	2.05E-11
Cr-51	8.49E-05
Mn-54	1.51E-04
Co-58	6.02E-04
Co-60	1.51E-04
I131	3.71E+00
I132	4.70E+00
I133	7.04E+00
I134	6.68E+00
I135	6.25E+00
Cs134	8.84E-02
Cs135	6.03E-12
Cs136	1.00E-02
Cs137	1.58E-02
Cs138	3.64E-01
Rb87	2.28E-16
Rb88	3.45E-01

REACTOR CONTAINMENT BUILDING ATMOSPHERE RADIOACTIVITY

RCB Atmosphere	
Real Time period start	13:15
Real Time Period end	13:29
Drill Time	6:15
Concentration (uCi/cc)	
Noble Gases	
Ar41	1.07E-06
Kr85m	8.50E-01
Kr85	1.10E-01
Kr87	1.28E+00
Kr88	2.14E+00
Xe131m	2.36E-02
Xe133	7.02E+00
Xe133m	1.04E+00
Xe135	2.09E+00
Xe135m	1.01E+00
Xe138	1.40E+00
Particulates and Iodines	
F-18	2.43E-06
Na-24	2.03E-11
Cr-51	8.49E-05
Mn-54	1.51E-04
Co-58	6.01E-04
Co-60	1.51E-04
I131	4.60E-01
I132	5.41E-01
I133	8.66E-01
I134	6.81E-01
I135	7.56E-01
Cs134	1.10E-02
Cs135	1.52E-12
Cs136	1.24E-03
Cs137	1.96E-03
Cs138	5.70E-02
Rb87	5.35E-17
Rb88	6.62E-02

REACTOR CONTAINMENT BUILDING ATMOSPHERE RADIOACTIVITY

RCB Atmosphere	
Real Time period start	13:30
Real Time Period end	13:44
Drill Time	6:30
Concentration (uCi/cc)	
Noble Gases	
Ar41	1.07E-06
Kr85m	8.50E-01
Kr85	1.10E-01
Kr87	1.28E+00
Kr88	2.14E+00
Xe131m	2.36E-02
Xe133	7.02E+00
Xe133m	1.04E+00
Xe135	2.09E+00
Xe135m	1.01E+00
Xe138	1.40E+00
Particulates and Iodines	
F-18	2.43E-06
Na-24	2.03E-11
Cr-51	8.49E-05
Mn-54	1.51E-04
Co-58	6.01E-04
Co-60	1.51E-04
I131	4.60E-01
I132	5.41E-01
I133	8.66E-01
I134	6.81E-01
I135	7.56E-01
Cs134	1.10E-02
Cs135	1.52E-12
Cs136	1.24E-03
Cs137	1.96E-03
Cs138	5.70E-02
Rb87	5.35E-17
Rb88	6.62E-02

REACTOR CONTAINMENT BUILDING ATMOSPHERE RADIOACTIVITY

RCB Atmosphere	
Real Time period start	13:45
Real Time Period end	13:59
Drill Time	6:45
Concentration (uCi/cc)	
Noble Gases	
Ar41	9.75E-07
Kr85m	1.02E-01
Kr85	1.37E-02
Kr87	1.39E-01
Kr88	2.50E-01
Xe131m	2.93E-03
Xe133	8.70E-01
Xe133m	1.32E-01
Xe135	2.66E-01
Xe135m	1.15E-01
Xe138	8.30E-02
Particulates and Iodines	
F-18	2.21E-06
Na-24	2.01E-11
Cr-51	8.49E-05
Mn-54	1.51E-04
Co-58	6.01E-04
Co-60	1.51E-04
I131	5.71E-02
I132	6.22E-02
I133	1.07E-01
I134	6.93E-02
I135	9.13E-02
Cs134	1.36E-03
Cs135	2.86E-13
Cs136	1.54E-04
Cs137	2.43E-04
Cs138	6.56E-03
Rb87	9.36E-18
Rb88	9.52E-03

REACTOR CONTAINMENT BUILDING ATMOSPHERE RADIOACTIVITY

RCB Atmosphere	
Real Time period start	14:00
Real Time Period end	14:14
Drill Time	7:00
Concentration (uCi/cc)	
Noble Gases	
Ar41	8.87E-07
Kr85m	1.21E-02
Kr85	1.70E-03
Kr87	1.51E-02
Kr88	2.92E-02
Xe131m	3.64E-04
Xe133	1.08E-01
Xe133m	1.66E-02
Xe135	3.37E-02
Xe135m	1.34E-02
Xe138	4.93E-03
Particulates and Iodines	
F-18	2.01E-06
Na-24	1.98E-11
Cr-51	8.49E-05
Mn-54	1.51E-04
Co-58	6.01E-04
Co-60	1.51E-04
I131	7.08E-03
I132	7.15E-03
I133	1.31E-02
I134	7.06E-03
I135	1.10E-02
Cs134	1.69E-04
Cs135	4.78E-14
Cs136	1.91E-05
Cs137	3.02E-05
Cs138	6.75E-04
Rb87	1.46E-18
Rb88	1.24E-03

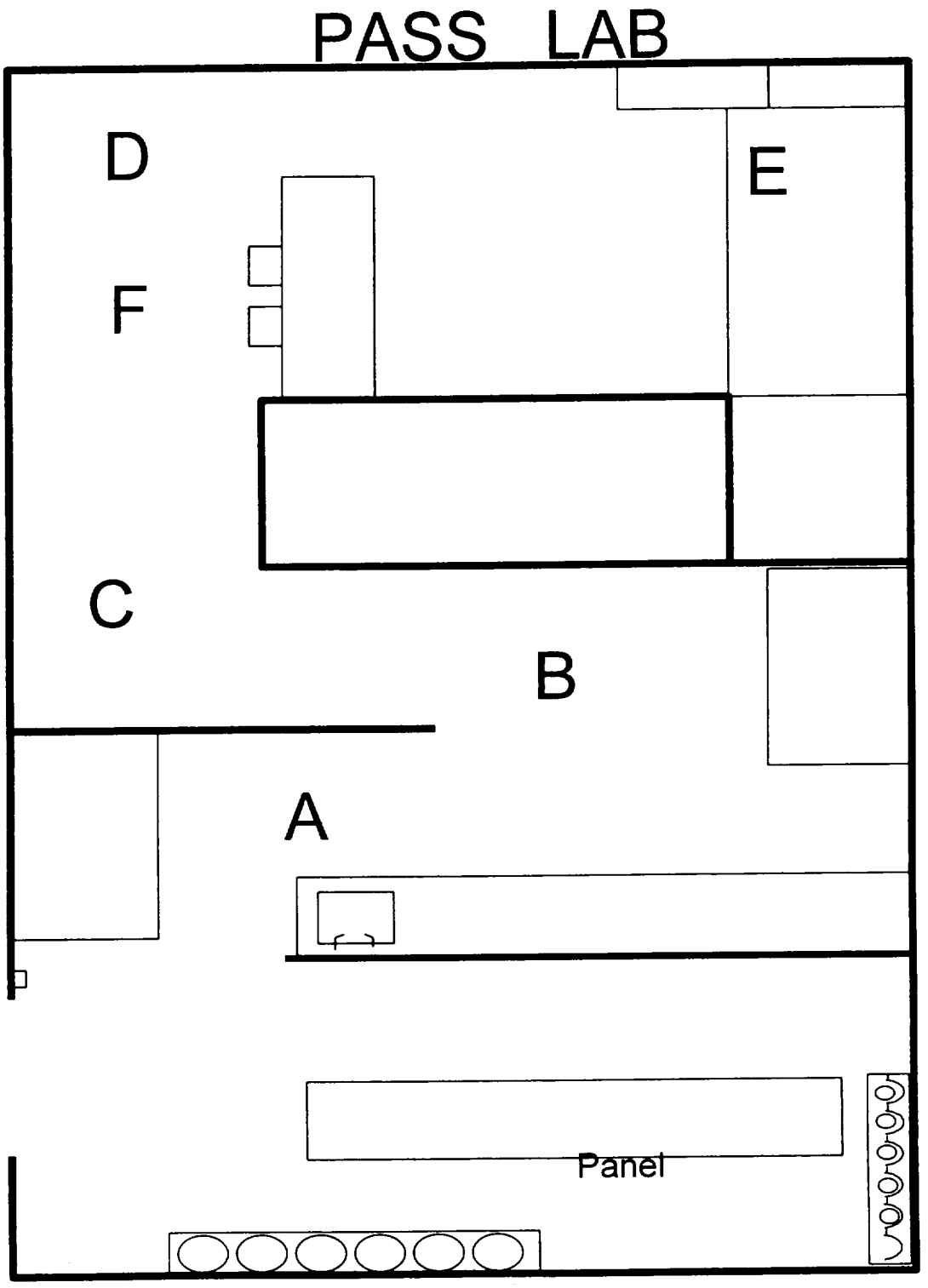
PASS LAB
D
E
F
C
B
A
Panel

RCS/RHR/SUMP READINGS	PASS
Real Time period start	7:00
Real Time Period end	7:29
Drill Time:	0:00
Common for all Dilutions (mR/hr)	
Point A	AS READ
Point B	AS READ
Point C	AS READ
Point D	AS READ
Point F	AS READ
Point E (contact)	AS READ
Common for all Dilutions (mR/min)	
Gamma Detector mR/min	AS READ
Undiluted Liquid (mR/hr)	
Pig Contact (shield)	AS READ
Carry Shield Contact	AS READ
Syringe Contact	AS READ
Diluted Liquid 100:1 (mR/hr)	
Pig Contact (shield)	AS READ
Carry Shield Contact	AS READ
Syringe Contact	AS READ
Diluted Liquid 1000:1 (mR/hr)	
Pig Contact (shield)	AS READ
Carry Shield Contact	AS READ
Syringe Contact	AS READ
Chemistry Parameters	
pH	6.56E+00
Conductivity (uS/cm)	2.56E+01
O2 (ppm)	<0.002
H2 (cc/kg)	4.10E+01
Boron (ppm)	9.24E+02
RCS Pressute (psig)	2.24E+03

RCS/RHR/SUMP READINGS	***PASS***
Real Time period start	7:30
Real Time Period end	7:44
Drill Time:	0:30
Common for all Dilutions (mR/hr)	
Point A	AS READ
Point B	AS READ
Point C	AS READ
Point D	AS READ
Point F	AS READ
Point E (contact)	AS READ
Common for all Dilutions (mR/min)	
Gamma Detector mR/min	AS READ
Undiluted Liquid (mR/hr)	
Pig Contact (shield)	AS READ
Carry Shield Contact	AS READ
Syringe Contact	AS READ
Diluted Liquid 100:1 (mR/hr)	
Pig Contact (shield)	AS READ
Carry Shield Contact	AS READ
Syringe Contact	AS READ
Diluted Liquid 1000:1 (mR/hr)	
Pig Contact (shield)	AS READ
Carry Shield Contact	AS READ
Syringe Contact	AS READ
Chemistry Parameters	
pH	6.56E+00
Conductivity (uS/cm)	2.56E+01
O2 (ppm)	<0.002
H2 (cc/kg)	4.10E+01
Boron (ppm)	9.24E+02
RCS Pressute (psig)	2.24E+03

RCS/RHR/SUMP READINGS	PASS
Real Time period start	7:45
Real Time Period end	7:59
Drill Time:	0:45
Common for all Dilutions (mR/hr)	
Point A	AS READ
Point B	AS READ
Point C	AS READ
Point D	AS READ
Point F	AS READ
Point E (contact)	AS READ
Common for all Dilutions (mR/min)	
Gamma Detector mR/min	AS READ
Undiluted Liquid (mR/hr)	
Pig Contact (shield)	AS READ
Carry Shield Contact	AS READ
Syringe Contact	AS READ
Diluted Liquid 100:1 (mR/hr)	
Pig Contact (shield)	AS READ
Carry Shield Contact	AS READ
Syringe Contact	AS READ
Diluted Liquid 1000:1 (mR/hr)	
Pig Contact (shield)	AS READ
Carry Shield Contact	AS READ
Syringe Contact	AS READ
Chemistry Parameters	
pH	6 49E+00
Conductivity (uS/cm)	2 32E+01
O2 (ppm)	<0 002
H2 (cc/kg)	3 90E+01
Boron (ppm)	9 79E+02
RCS Pressute (psig)	2 24E+03

POST ACCIDENT SAMPLING SYSTEM READINGS

RCS/RHR/SUMP READINGS	***PASS***
Real Time period start	**8:00**
Real Time Period end	**8:14**
Drill Time:	**1:00**
Common for all Dilutions (mR/hr)	
Point A	AS READ
Point B	AS READ
Point C	AS READ
Point D	AS READ
Point F	AS READ
Point E (contact)	AS READ
Common for all Dilutions (mR/min)	
Gamma Detector mR/min	AS READ
Undiluted Liquid (mR/hr)	
Pig Contact (shield)	AS READ
Carry Shield Contact	AS READ
Syringe Contact	AS READ
Diluted Liquid 100:1 (mR/hr)	
Pig Contact (shield)	AS READ
Carry Shield Contact	AS READ
Syringe Contact	AS READ
Diluted Liquid 1000:1 (mR/hr)	
Pig Contact (shield)	AS READ
Carry Shield Contact	AS READ
Syringe Contact	AS READ
Chemistry Parameters	
pH	6.42E+00
Conductivity (uS/cm)	2.32E+01
O2 (ppm)	<0.002
H2 (cc/kg)	3.90E+01
Boron (ppm)	1.04E+03
RCS Pressute (psig)	2.24E+03

RCS/RHR/SUMP READINGS	***PASS***
Real Time period start	**8:15**
Real Time Period end	**8:29**
Drill Time:	**1:15**
Common for all Dilutions (mR/hr)	
Point A	AS READ
Point B	AS READ
Point C	AS READ
Point D	1.76E+00
Point F	AS READ
Point E (contact)	4.60E+02
Common for all Dilutions (mR/min)	
Gamma Detector mR/min	1.01E+02
Undiluted Liquid (mR/hr)	
Pig Contact (shield)	2.20E+00
Carry Shield Contact	3.40E+01
Syringe Contact	3.38E+03
Diluted Liquid 100:1 (mR/hr)	
Pig Contact (shield)	AS READ
Carry Shield Contact	3.40E-01
Syringe Contact	3.38E+01
Diluted Liquid 1000:1 (mR/hr)	
Pig Contact (shield)	AS READ
Carry Shield Contact	AS READ
Syringe Contact	3.38E+00
Chemistry Parameters	
pH	6.34E+00
Conductivity (uS/cm)	2.16E+01
O2 (ppm)	<0.002
H2 (cc/kg)	3.90E+01
Boron (ppm)	1.10E+03
RCS Pressute (psig)	2.24E+03

RCS/RHR/SUMP READINGS	***PASS***
Real Time period start	**8:30**
Real Time Period end	**8:44**
Drill Time:	**1:30**
Common for all Dilutions (mR/hr)	
Point A	AS READ
Point B	AS READ
Point C	AS READ
Point D	3.51E+00
Point F	AS READ
Point E (contact)	9.20E+02
Common for all Dilutions (mR/min)	
Gamma Detector mR/min	2.03E+02
Undiluted Liquid (mR/hr)	
Pig Contact (shield)	4.40E+00
Carry Shield Contact	6.79E+01
Syringe Contact	6.75E+03
Diluted Liquid 100:1 (mR/hr)	
Pig Contact (shield)	AS READ
Carry Shield Contact	6.79E-01
Syringe Contact	6.75E+01
Diluted Liquid 1000:1 (mR/hr)	
Pig Contact (shield)	AS READ
Carry Shield Contact	AS READ
Syringe Contact	6.75E+00
Chemistry Parameters	
pH	6.24E+00
Conductivity (uS/cm)	1.95E+01
O2 (ppm)	<0.002
H2 (cc/kg)	3.90E+01
Boron (ppm)	1.17E+03
RCS Pressute (psig)	2.24E+03

RCS/RHR/SUMP READINGS	***PASS***
Real Time period start	**8:45**
Real Time Period end	**8:59**
Drill Time:	**1:45**
Common for all Dilutions (mR/hr)	
Point A	AS READ
Point B	AS READ
Point C	AS READ
Point D	5.27E+00
Point F	AS READ
Point E (contact)	1.38E+03
Common for all Dilutions (mR/min)	
Gamma Detector mR/min	3.04E+02
Undiluted Liquid (mR/hr)	
Pig Contact (shield)	6.60E+00
Carry Shield Contact	1.02E+02
Syringe Contact	1.01E+04
Diluted Liquid 100:1 (mR/hr)	
Pig Contact (shield)	AS READ
Carry Shield Contact	1.02E+00
Syringe Contact	1.01E+02
Diluted Liquid 1000:1 (mR/hr)	
Pig Contact (shield)	AS READ
Carry Shield Contact	AS READ
Syringe Contact	1.01E+01
Chemistry Parameters	
pH	6.14E+00
Conductivity (uS/cm)	1.75E+01
O2 (ppm)	<0.002
H2 (cc/kg)	3.90E+01
Boron (ppm)	1.24E+03
RCS Pressute (psig)	2.24E+03

RCS/RHR/SUMP READINGS	PASS
Real Time period start	9:00
Real Time Period end	9:14
Drill Time:	2:00
Common for all Dilutions (mR/hr)	
Point A	AS READ
Point B	AS READ
Point C	AS READ
Point D	7.67E+00
Point F	AS READ
Point E (contact)	2.01E+03
Common for all Dilutions (mR/min)	
Gamma Detector mR/min	4.43E+02
Undiluted Liquid (mR/hr)	
Pig Contact (shield)	9.75E+00
Carry Shield Contact	1.51E+02
Syringe Contact	1.48E+04
Diluted Liquid 100:1 (mR/hr)	
Pig Contact (shield)	AS READ
Carry Shield Contact	1.51E+00
Syringe Contact	1.48E+02
Diluted Liquid 1000:1 (mR/hr)	
Pig Contact (shield)	AS READ
Carry Shield Contact	AS READ
Syringe Contact	1.48E+01
Chemistry Parameters	
pH	6.03E+00
Conductivity (uS/cm)	1.54E+01
O2 (ppm)	<0.002
H2 (cc/kg)	3.90E+01
Boron (ppm)	1.31E+03
RCS Pressute (psig)	2.24E+03

POST ACCIDENT SAMPLING SYSTEM READINGS

RCS/RHR/SUMP READINGS	PASS
Real Time period start	9:15
Real Time Period end	9:29
Drill Time:	2:15
Common for all Dilutions (mR/hr)	
Point A	AS READ
Point B	AS READ
Point C	AS READ
Point D	5.65E+01
Point F	AS READ
Point E (contact)	1.48E+04
Common for all Dilutions (mR/min)	
Gamma Detector mR/min	3.26E+03
Undiluted Liquid (mR/hr)	
Pig Contact (shield)	7.20E+01
Carry Shield Contact	1.11E+03
Syringe Contact	1.09E+05
Diluted Liquid 100:1 (mR/hr)	
Pig Contact (shield)	7.20E-01
Carry Shield Contact	1.11E+01
Syringe Contact	1.09E+03
Diluted Liquid 1000:1 (mR/hr)	
Pig Contact (shield)	AS READ
Carry Shield Contact	1.11E+00
Syringe Contact	1.09E+02
Chemistry Parameters	
pH	5.91E+00
Conductivity (uS/cm)	1.35E+01
O2 (ppm)	<0.002
H2 (cc/kg)	3.90E+01
Boron (ppm)	1.39E+03
RCS Pressute (psig)	9.43E+02

RCS/RHR/SUMP READINGS	PASS
Real time period start	9:30
Real Time Period end	9:44
Drill Time:	2:30
Common for all Dilutions (mR/hr)	
Point A	AS READ
Point B	AS READ
Point C	AS READ
Point D	9.79E+01
Point F	AS READ
Point E (contact)	2.56E+04
Common for all Dilutions (mR/min)	
Gamma Detector mR/min	5.65E+03
Undiluted Liquid (mR/hr)	
Pig Contact (shield)	1.26E+02
Carry Shield Contact	1.95E+03
Syringe Contact	1.88E+05
Diluted Liquid 100:1 (mR/hr)	
Pig Contact (shield)	1.26E+00
Carry Shield Contact	1.95E+01
Syringe Contact	1.88E+03
Diluted Liquid 1000:1 (mR/hr)	
Pig Contact (shield)	AS READ
Carry Shield Contact	1.95E+00
Syringe Contact	1.88E+02
Chemistry Parameters	
pH	5.74E+00
Conductivity (uS/cm)	1.06E+01
O2 (ppm)	<0.002
H2 (cc/kg)	3.60E+01
Boron (ppm)	1.47E+03
RCS Pressute (psig)	9.17E+02

RCS/RHR/SUMP READINGS	***PASS***
Real Time period start	**9:45**
Real Time Period end	**9:59**
Drill Time:	**2:45**
Common for all Dilutions (mR/hr)	
Point A	AS READ
Point B	AS READ
Point C	AS READ
Point D	1.33E+02
Point F	AS READ
Point E (contact)	3.49E+04
Common for all Dilutions (mR/min)	
Gamma Detector mR/min	7.69E+03
Undiluted Liquid (mR/hr)	
Pig Contact (shield)	1.71E+02
Carry Shield Contact	2.66E+03
Syringe Contact	2.56E+05
Diluted Liquid 100:1 (mR/hr)	
Pig Contact (shield)	1.71E+00
Carry Shield Contact	2.66E+01
Syringe Contact	2.56E+03
Diluted Liquid 1000:1 (mR/hr)	
Pig Contact (shield)	AS READ
Carry Shield Contact	2.66E+00
Syringe Contact	2.56E+02
Chemistry Parameters	
pH	4.90E+00
Conductivity (uS/cm)	7.70E+00
O2 (ppm)	<0.002
H2 (cc/kg)	2.10E+01
Boron (ppm)	2.19E+03
RCS Pressute (psig)	8.75E+02

POST ACCIDENT SAMPLING SYSTEM READINGS

RCS/RHR/SUMP READINGS	PASS
Real Time period start	10:00
Real Time Period end	10:14
Drill Time:	3:00
Common for all Dilutions (mR/hr)	
Point A	AS READ
Point B	AS READ
Point C	AS READ
Point D	1.95E+02
Point F	AS READ
Point E (contact)	5.09E+04
Common for all Dilutions (mR/min)	
Gamma Detector mR/min	1.12E+04
Undiluted Liquid (mR/hr)	
Pig Contact (shield)	2.49E+02
Carry Shield Contact	3.88E+03
Syringe Contact	3.74E+05
Diluted Liquid 100:1 (mR/hr)	
Pig Contact (shield)	2.49E+00
Carry Shield Contact	3.88E+01
Syringe Contact	3.74E+03
Diluted Liquid 1000:1 (mR/hr)	
Pig Contact (shield)	2.49E-01
Carry Shield Contact	3.88E+00
Syringe Contact	3.74E+02
Chemistry Parameters	
pH	4.90E+00
Conductivity (uS/cm)	7.70E+00
O2 (ppm)	<0.002
H2 (cc/kg)	6.00E+00
Boron (ppm)	2.19E+03
RCS Pressute (psig)	5.51E+02

RCS/RHR/SUMP READINGS	PASS
Real Time period start	10:15
Real Time Period end	10:29
Drill Time:	3:15
Common for all Dilutions (mR/hr)	
Point A	AS READ
Point B	AS READ
Point C	AS READ
Point D	4.43E+02
Point F	AS READ
Point E (contact)	1.16E+05
Common for all Dilutions (mR/min)	
Gamma Detector mR/min	2.56E+04
Undiluted Liquid (mR/hr)	
Pig Contact (shield)	5.63E+02
Carry Shield Contact	8.82E+03
Syringe Contact	8.52E+05
Diluted Liquid 100:1 (mR/hr)	
Pig Contact (shield)	5.63E+00
Carry Shield Contact	8.82E+01
Syringe Contact	8.52E+03
Diluted Liquid 1000:1 (mR/hr)	
Pig Contact (shield)	5.63E-01
Carry Shield Contact	8.82E+00
Syringe Contact	8.52E+02
Chemistry Parameters	
pH	4.88E+00
Conductivity (uS/cm)	7.70E+00
O2 (ppm)	<0.002
H2 (cc/kg)	0.00E+00
Boron (ppm)	2.19E+03
RCS Pressute (psig)	4.18E+02

POST ACCIDENT SAMPLING SYSTEM READINGS

FOR ALL LIQUID SAMPLES FROM AP SYSTEM

RCS/RHR/SUMP READINGS	PASS
Real Time period start	10:30
Real Time Period end	10:44
Drill Time:	3:30
Common for all Dilutions (mR/hr)	
Point A	AS READ
Point B	AS READ
Point C	AS READ
Point D	1.96E+03
Point F	AS READ
Point E (contact)	5.12E+05
Common for all Dilutions (mR/min)	
Gamma Detector mR/min	1.13E+05
Undiluted Liquid (mR/hr)	
Pig Contact (shield)	2.45E+03
Carry Shield Contact	3.85E+04
Syringe Contact	3.76E+06
Diluted Liquid 100:1 (mR/hr)	
Pig Contact (shield)	2.45E+01
Carry Shield Contact	3.85E+02
Syringe Contact	3.76E+04
Diluted Liquid 1000:1 (mR/hr)	
Pig Contact (shield)	2.45E+00
Carry Shield Contact	3.85E+01
Syringe Contact	3.76E+03
Chemistry Parameters	
pH	4.87E+00
Conductivity (uS/cm)	7.70E+00
O2 (ppm)	<0.002
H2 (cc/kg)	0.00E+00
Boron (ppm)	2.19E+03
RCS Pressute (psig)	4.16E+02

RCS/RHR/SUMP READINGS	PASS
Real Time period start	10:45
Real Time Period end	10:59
Drill Time:	3:45
Common for all Dilutions (mR/hr)	
Point A	AS READ
Point B	AS READ
Point C	AS READ
Point D	5.98E+02
Point F	AS READ
Point E (contact)	1.57E+05
Common for all Dilutions (mR/min)	
Gamma Detector mR/min	3.45E+04
Undiluted Liquid (mR/hr)	
Pig Contact (shield)	7.49E+02
Carry Shield Contact	1.17E+04
Syringe Contact	1.15E+06
Diluted Liquid 100:1 (mR/hr)	
Pig Contact (shield)	7.49E+00
Carry Shield Contact	1.17E+02
Syringe Contact	1.15E+04
Diluted Liquid 1000:1 (mR/hr)	
Pig Contact (shield)	7.49E-01
Carry Shield Contact	1.17E+01
Syringe Contact	1.15E+03
Chemistry Parameters	
pH	4.87E+00
Conductivity (uS/cm)	7.70E+00
O2 (ppm)	<0.002
H2 (cc/kg)	0.00E+00
Boron (ppm)	2.19E+03
RCS Pressute (psig)	3.17E+02

RCS/RHR/SUMP READINGS	***PASS***
Real Time period start	**11:00**
Real Time Period end	**11:14**
Drill Time:	**4:00**
Common for all Dilutions (mR/hr)	
Point A	AS READ
Point B	AS READ
Point C	AS READ
Point D	4.44E+02
Point F	AS READ
Point E (contact)	1.16E+05
Common for all Dilutions (mR/min)	
Gamma Detector mR/min	2.56E+04
Undiluted Liquid (mR/hr)	
Pig Contact (shield)	5.61E+02
Carry Shield Contact	8.68E+03
Syringe Contact	8.53E+05
Diluted Liquid 100:1 (mR/hr)	
Pig Contact (shield)	5.61E+00
Carry Shield Contact	8.68E+01
Syringe Contact	8.53E+03
Diluted Liquid 1000:1 (mR/hr)	
Pig Contact (shield)	5.61E-01
Carry Shield Contact	8.68E+00
Syringe Contact	8.53E+02
Chemistry Parameters	
pH	4.85E+00
Conductivity (uS/cm)	7.70E+00
O2 (ppm)	<0.002
H2 (cc/kg)	0.00E+00
Boron (ppm)	2.19E+03
RCS Pressute (psig)	2.56E+02

POST ACCIDENT SAMPLING SYSTEM READINGS

FOR ALL LIQUID SAMPLES FROM AP SYSTEM

RCS/RHR/SUMP READINGS	PASS
Real Time period start	11:15
Real Time Period end	11:29
Drill Time	4:15
Common for all Dilutions (mR/hr)	
Point A	AS READ
Point B	AS READ
Point C	AS READ
Point D	1.92E+04
Point F	AS READ
Point E (contact)	5.02E+06
Common for all Dilutions (mR/min)	
Gamma Detector mR/min	1.11E+06
Undiluted Liquid (mR/hr)	
Pig Contact (shield)	2.43E+04
Carry Shield Contact	3.76E+05
Syringe Contact	3.69E+07
Diluted Liquid 100:1 (mR/hr)	
Pig Contact (shield)	2.43E+02
Carry Shield Contact	3.76E+03
Syringe Contact	3.69E+05
Diluted Liquid 1000:1 (mR/hr)	
Pig Contact (shield)	2.43E+01
Carry Shield Contact	3.76E+02
Syringe Contact	3.69E+04
Chemistry Parameters	
pH	4.84E+00
Conductivity (uS/cm)	7.80E+00
O2 (ppm)	<0.002
H2 (cc/kg)	0.00E+00
Boron (ppm)	2.19E+03
RCS Pressute (psig)	2.32E+02

POST ACCIDENT SAMPLING SYSTEM READINGS

RCS/RHR/SUMP READINGS	PASS
Real time period start	11:30
Real time Period end	11:44
Drill time:	4:30
Common for all Dilutions (mR/hr)	
Point A	AS READ
Point B	AS READ
Point C	AS READ
Point D	7.99E+03
Point F	AS READ
Point E (contact)	2.09E+06
Common for all Dilutions (mR/min)	
Gamma Detector mR/min	4.61E+05
Undiluted Liquid (mR/hr)	
Pig Contact (shield)	1.02E+04
Carry Shield Contact	1.58E+05
Syringe Contact	1.54E+07
Diluted Liquid 100:1 (mR/hr)	
Pig Contact (shield)	1.02E+02
Carry Shield Contact	1.58E+03
Syringe Contact	1.54E+05
Diluted Liquid 1000:1 (mR/hr)	
Pig Contact (shield)	1.02E+01
Carry Shield Contact	1.58E+02
Syringe Contact	1.54E+04
Chemistry Parameters	
pH	4.78E+00
Conductivity (uS/cm)	8.30E+00
O2 (ppm)	<0.002
H2 (cc/kg)	0.00E+00
Boron (ppm)	2.28E+03
RCS Pressute (psig)	2.73E+02

RCS/RHR/SUMP READINGS	PASS
Real time period start	11:45
Real time Period end	11:59
Drill time:	4:45
Common for all Dilutions (mR/hr)	
Point A	AS READ
Point B	AS READ
Point C	AS READ
Point D	4.66E+03
Point F	AS READ
Point E (contact)	1.22E+06
Common for all Dilutions (mR/min)	
Gamma Detector mR/min	2.69E+05
Undiluted Liquid (mR/hr)	
Pig Contact (shield)	5.92E+03
Carry Shield Contact	9.15E+04
Syringe Contact	8.96E+06
Diluted Liquid 100:1 (mR/hr)	
Pig Contact (shield)	5.92E+01
Carry Shield Contact	9.15E+02
Syringe Contact	8.96E+04
Diluted Liquid 1000:1 (mR/hr)	
Pig Contact (shield)	5.92E+00
Carry Shield Contact	9.15E+01
Syringe Contact	8.96E+03
Chemistry Parameters	
pH	4.64E+00
Conductivity (uS/cm)	1.07E+01
O2 (ppm)	<0.002
H2 (cc/kg)	0.00E+00
Boron (ppm)	2.68E+03
RCS Pressute (psig)	2.49E+02

RCS/RHR/SUMP READINGS	PASS
Real time period start	12:00
Real time Period end	12:14
Drill Time:	5:00
Common for all Dilutions (mR/hr)	
Point A	AS READ
Point B	AS READ
Point C	AS READ
Point D	4.29E+03
Point F	AS READ
Point E (contact)	1.12E+06
Common for all Dilutions (mR/min)	
Gamma Detector mR/min	2.47E+05
Undiluted Liquid (mR/hr)	
Pig Contact (shield)	5.43E+03
Carry Shield Contact	8.40E+04
Syringe Contact	8.24E+06
Diluted Liquid 100:1 (mR/hr)	
Pig Contact (shield)	5.43E+01
Carry Shield Contact	8.40E+02
Syringe Contact	8.24E+04
Diluted Liquid 1000:1 (mR/hr)	
Pig Contact (shield)	5.43E+00
Carry Shield Contact	8.40E+01
Syringe Contact	8.24E+03
Chemistry Parameters	
pH	4.61E+00
Conductivity (uS/cm)	1.09E+01
O2 (ppm)	<0.002
H2 (cc/kg)	0.00E+00
Boron (ppm)	2.68E+03
RCS Pressute (psig)	2.35E+02

RCS/RHR/SUMP READINGS	PASS
Real Time period start	12:15
Real Time Period end	12:29
Drill Time:	5:15
Common for all Dilutions (mR/hr)	
Point A	AS READ
Point B	AS READ
Point C	AS READ
Point D	4.24E+03
Point F	AS READ
Point E (contact)	1.11E+06
Common for all Dilutions (mR/min)	
Gamma Detector mR/min	2.45E+05
Undiluted Liquid (mR/hr)	
Pig Contact (shield)	5.38E+03
Carry Shield Contact	8.31E+04
Syringe Contact	8.16E+06
Diluted Liquid 100:1 (mR/hr)	
Pig Contact (shield)	5.38E+01
Carry Shield Contact	8.31E+02
Syringe Contact	8.16E+04
Diluted Liquid 1000:1 (mR/hr)	
Pig Contact (shield)	5.38E+00
Carry Shield Contact	8.31E+01
Syringe Contact	8.16E+03
Chemistry Parameters	
pH	4.61E+00
Conductivity (uS/cm)	1.09E+01
O2 (ppm)	<0.002
H2 (cc/kg)	0.00E+00
Boron (ppm)	2.68E+03
RCS Pressute (psig)	2.25E+02

RCS/RHR/SUMP READINGS	PASS
Real Time period start	12:30
Real Time Period end	12:44
Drill Time	5:30
Common for all Dilutions (mR/hr)	
Point A	AS READ
Point B	AS READ
Point C	AS READ
Point D	4.24E+03
Point F	AS READ
Point E (contact)	1.11E+06
Common for all Dilutions (mR/min)	
Gamma Detector mR/min	2.45E+05
Undiluted Liquid (mR/hr)	
Pig Contact (shield)	5.37E+03
Carry Shield Contact	8.31E+04
Syringe Contact	8.15E+06
Diluted Liquid 100:1 (mR/hr)	
Pig Contact (shield)	5.37E+01
Carry Shield Contact	8.31E+02
Syringe Contact	8.15E+04
Diluted Liquid 1000:1 (mR/hr)	
Pig Contact (shield)	5.37E+00
Carry Shield Contact	8.31E+01
Syringe Contact	8.15E+03
Chemistry Parameters	
pH	4.61E+00
Conductivity (uS/cm)	1.09E+01
O2 (ppm)	<0.002
H2 (cc/kg)	0.00E+00
Boron (ppm)	2.68E+03
RCS Pressute (psig)	2.50E+02

POST ACCIDENT SAMPLING SYSTEM READINGS

FOR ALL LIQUID SAMPLES FROM AP SYSTEM

RCS/RHR/SUMP READINGS	PASS
Real Time period start	12:45
Real Time Period end	12:59
Drill Time:	5:45
Common for all Dilutions (mR/hr)	
Point A	AS READ
Point B	AS READ
Point C	AS READ
Point D	4.24E+03
Point F	AS READ
Point E (contact)	1.11E+06
Common for all Dilutions (mR/min)	
Gamma Detector mR/min	2.45E+05
Undiluted Liquid (mR/hr)	
Pig Contact (shield)	5.37E+03
Carry Shield Contact	8.30E+04
Syringe Contact	8.15E+06
Diluted Liquid 100:1 (mR/hr)	
Pig Contact (shield)	5.37E+01
Carry Shield Contact	8.30E+02
Syringe Contact	8.15E+04
Diluted Liquid 1000:1 (mR/hr)	
Pig Contact (shield)	5.37E+00
Carry Shield Contact	8.30E+01
Syringe Contact	8.15E+03
Chemistry Parameters	
pH	4.61E+00
Conductivity (uS/cm)	1.09E+01
O2 (ppm)	<0.002
H2 (cc/kg)	0.00E+00
Boron (ppm)	2.68E+03
RCS Pressute (psig)	2.55E+02

POST ACCIDENT SAMPLING SYSTEM READINGS

RCS/RHR/SUMP READINGS	PASS
Real time period start	13:00
Real time Period end	13:14
Drill Time:	6:00
Common for all Dilutions (mR/hr)	
Point A	AS READ
Point B	AS READ
Point C	AS READ
Point D	4.24E+03
Point F	AS READ
Point E (contact)	1.11E+06
Common for all Dilutions (mR/min)	
Gamma Detector mR/min	2.45E+05
Undiluted Liquid (mR/hr)	
Pig Contact (shield)	5.37E+03
Carry Shield Contact	8.30E+04
Syringe Contact	8.15E+06
Diluted Liquid 100:1 (mR/hr)	
Pig Contact (shield)	5.37E+01
Carry Shield Contact	8.30E+02
Syringe Contact	8.15E+04
Diluted Liquid 1000:1 (mR/hr)	
Pig Contact (shield)	5.37E+00
Carry Shield Contact	8.30E+01
Syringe Contact	8.15E+03
Chemistry Parameters	
pH	4.61E+00
Conductivity (uS/cm)	1.09E+01
O2 (ppm)	<0.002
H2 (cc/kg)	0.00E+00
Boron (ppm)	2.68E+03
RCS Pressute (psig)	2.55E+02

POST ACCIDENT SAMPLING SYSTEM READINGS

FOR ALL LIQUID SAMPLES FROM AP SYSTEM

RCS/RHR/SUMP READINGS	PASS		
Real Time period start	13:15	13:30	13:45
Real Time Period end	13:29	13:44	13:59
Drill Time:	6:15	6:30	6:45
Common for all Dilutions (mR/hr)			
Point A	AS READ	AS READ	AS READ
Point B	AS READ	AS READ	AS READ
Point C	AS READ	AS READ	AS READ
Point D	2.04E+03	2.29E+02	2.57E+01
Point F	AS READ	AS READ	AS READ
Point E (contact)	5.35E+05	5.99E+04	6.73E+03
Common for all Dilutions (mR/min)			
Gamma Detector mR/min	1.18E+05	1.32E+04	1.48E+03
Undiluted Liquid (mR/hr)			
Pig Contact (shield)	2.62E+03	2.97E+02	3.29E+01
Carry Shield Contact	4.06E+04	4.62E+03	5.16E+02
Syringe Contact	3.93E+06	4.40E+05	4.94E+04
Diluted Liquid 100:1 (mR/hr)			
Pig Contact (shield)	2.62E+01	2.97E+00	3.29E-01
Carry Shield Contact	4.06E+02	4.62E+01	5.16E+00
Syringe Contact	3.93E+04	4.40E+03	4.94E+02
Diluted Liquid 1000:1 (mR/hr)			
Pig Contact (shield)	2.62E+00	2.97E-01	AS READ
Carry Shield Contact	4.06E+01	4.62E+00	5.16E-01
Syringe Contact	3.93E+03	4.40E+02	4.94E+01
Chemistry Parameters			
pH	4.61E+00	4.61E+00	4.61E+00
Conductivity (uS/cm)	1.09E+01	1.09E+01	1.09E+01
O2 (ppm)	<0.002	<0.002	<0.002
H2 (cc/kg)	0.00E+00	0.00E+00	0.00E+00
Boron (ppm)	2.68E+03	2.68E+03	2.68E+03
RCS Pressute (psig)	2.54E+02	2.54E+02	2.54E+02

RCS/RHR/SUMP READINGS	PASS
Real time period start	14:00
Real Time Period end	14:14
Drill Time:	7:00
Common for all Dilutions (mR/hr)	
Point A	AS READ
Point B	AS READ
Point C	AS READ
Point D	2.90E+00
Point F	AS READ
Point E (contact)	7.60E+02
Common for all Dilutions (mR/min)	
Gamma Detector mR/min	1.67E+02
Undiluted Liquid (mR/hr)	
Pig Contact (shield)	3.63E+00
Carry Shield Contact	5.74E+01
Syringe Contact	5.58E+03
Diluted Liquid 100:1 (mR/hr)	
Pig Contact (shield)	AS READ
Carry Shield Contact	5.74E-01
Syringe Contact	5.58E+01
Diluted Liquid 1000:1 (mR/hr)	
Pig Contact (shield)	AS READ
Carry Shield Contact	AS READ
Syringe Contact	5.58E+00
Chemistry Parameters	
pH	4.61E+00
Conductivity (uS/cm)	1.09E+01
O2 (ppm)	<0.002
H2 (cc/kg)	0.00E+00
Boron (ppm)	2.68E+03
RCS Pressute (psig)	2.54E+02

REACTOR CONTAINMENT
BUILDING ATMOSPHERE
POST ACCIDENT SAMPLING
SYSTEM READING

RCB ATMOSPHERE PASS READINGS	
Real Time period start	7:00
Real Time Period end	7:29
Drill Time	0:00
Common for all Dilutions with no liquid flow prior to or during sampling. If Panel was used for liquid sampling then use data for liquid sample. (mR/hr)	
Point A	AS READ
Point B	AS READ
Point C	AS READ
Point D	AS READ
Point F	AS READ
Point E (contact)	AS READ
Common for all Dilutions (mR/min)	
Gamma Detector	AS READ
Undiluted Gas (mR/hr)	
Pig Contact (shield)	AS READ
Carry Shield Contact	AS READ
Syringe Contact	AS READ
Diluted Gas 100:1 (mR/hr)	
Pig Contact (shield)	AS READ
Carry Shield Contact	AS READ
Syringe Contact	AS READ
Diluted Gas 10000:1 (mR/hr)	
Pig Contact (shield)	AS READ
Carry Shield Contact	AS READ
Syringe Contact	AS READ

REACTOR CONTAINMENT
BUILDING ATMOSPHERE
POST ACCIDENT SAMPLING
SYSTEM READING

RCB ATMOSPHERE PASS READINGS	
Real Time period start	**7:30**
Real Time Period end	**7:44**
Drill Time:	**0:30**
Common for all Dilutions with no liquid flow prior to or during sampling. If Panel was used for liquid sampling then use data for liquid sample. (mR/hr)	
Point A	AS READ
Point B	AS READ
Point C	AS READ
Point D	AS READ
Point F	AS READ
Point E (contact)	AS READ
Common for all Dilutions (mR/min)	
Gamma Detector	AS READ
Undiluted Gas (mR/hr)	
Pig Contact (shield)	AS READ
Carry Shield Contact	AS READ
Syringe Contact	AS READ
Diluted Gas 100:1 (mR/hr)	
Pig Contact (shield)	AS READ
Carry Shield Contact	AS READ
Syringe Contact	AS READ
Diluted Gas 10000:1 (mR/hr)	
Pig Contact (shield)	AS READ
Carry Shield Contact	AS READ
Syringe Contact	AS READ

REACTOR CONTAINMENT
BUILDING ATMOSPHERE
POST ACCIDENT SAMPLING
SYSTEM READING

RCB ATMOSPHERE PASS READINGS	
Real Time period start	**7:45**
Real Time Period end	**7:59**
Drill Time:	**0:45**
Common for all Dilutions with no liquid flow prior to or during sampling. If Panel was used for liquid sampling then use data for liquid sample. (mR/hr)	
Point A	AS READ
Point B	AS READ
Point C	AS READ
Point D	AS READ
Point F	AS READ
Point E (contact)	AS READ
Common for all Dilutions (mR/min)	
Gamma Detector	AS READ
Undiluted Gas (mR/hr)	
Pig Contact (shield)	AS READ
Carry Shield Contact	AS READ
Syringe Contact	AS READ
Diluted Gas 100:1 (mR/hr)	
Pig Contact (shield)	AS READ
Carry Shield Contact	AS READ
Syringe Contact	AS READ
Diluted Gas 10000:1 (mR/hr)	
Pig Contact (shield)	AS READ
Carry Shield Contact	AS READ
Syringe Contact	AS READ

REACTOR CONTAINMENT
BUILDING ATMOSPHERE
POST ACCIDENT SAMPLING
SYSTEM READING

RCB ATMOSPHERE PASS READINGS	
Real Time period start	8:00
Real Time Period end	8:14
Drill Time:	1:00
Common for all Dilutions with no liquid flow prior to or during sampling. If Panel was used for liquid sampling then use data for liquid sample. (mR/hr)	
Point A	AS READ
Point B	AS READ
Point C	AS READ
Point D	AS READ
Point F	AS READ
Point E (contact)	AS READ
Common for all Dilutions (mR/min)	
Gamma Detector	AS READ
Undiluted Gas (mR/hr)	
Pig Contact (shield)	AS READ
Carry Shield Contact	AS READ
Syringe Contact	AS READ
Diluted Gas 100:1 (mR/hr)	
Pig Contact (shield)	AS READ
Carry Shield Contact	AS READ
Syringe Contact	AS READ
Diluted Gas 10000:1 (mR/hr)	
Pig Contact (shield)	AS READ
Carry Shield Contact	AS READ
Syringe Contact	AS READ

REACTOR CONTAINMENT
BUILDING ATMOSPHERE
POST ACCIDENT SAMPLING
SYSTEM READING

RCB ATMOSPHERE PASS READINGS	
Real Time period start	8:15
Real Time Period end	8:29
Drill Time:	1:15
Common for all Dilutions with no liquid flow prior to or during sampling. If Panel was used for liquid sampling then use data for liquid sample. (mR/hr)	
Point A	AS READ
Point B	AS READ
Point C	AS READ
Point D	AS READ
Point F	AS READ
Point E (contact)	AS READ
Common for all Dilutions (mR/min)	
Gamma Detector	AS READ
Undiluted Gas (mR/hr)	
Pig Contact (shield)	AS READ
Carry Shield Contact	AS READ
Syringe Contact	AS READ
Diluted Gas 100:1 (mR/hr)	
Pig Contact (shield)	AS READ
Carry Shield Contact	AS READ
Syringe Contact	AS READ
Diluted Gas 10000:1 (mR/hr)	
Pig Contact (shield)	AS READ
Carry Shield Contact	AS READ
Syringe Contact	AS READ

REACTOR CONTAINMENT
BUILDING ATMOSPHERE
POST ACCIDENT SAMPLING
SYSTEM READING

RCB ATMOSPHERE PASS READINGS	
Real Time period start	**8:30**
Real Time Period end	**8:44**
Drill Time:	**1:30**
Common for all Dilutions with no liquid flow prior to or during sampling. If Panel was used for liquid sampling then use data for liquid sample.	
(mR/hr)	
Point A	AS READ
Point B	AS READ
Point C	AS READ
Point D	AS READ
Point F	AS READ
Point E (contact)	AS READ
Common for all Dilutions (mR/min)	
Gamma Detector	AS READ
Undiluted Gas (mR/hr)	
Pig Contact (shield)	AS READ
Carry Shield Contact	AS READ
Syringe Contact	AS READ
Diluted Gas 100:1 (mR/hr)	
Pig Contact (shield)	AS READ
Carry Shield Contact	AS READ
Syringe Contact	AS READ
Diluted Gas 10000:1 (mR/hr)	
Pig Contact (shield)	AS READ
Carry Shield Contact	AS READ
Syringe Contact	AS READ

REACTOR CONTAINMENT
BUILDING ATMOSPHERE
POST ACCIDENT SAMPLING
SYSTEM READING

RCB ATMOSPHERE PASS READINGS	
Real Time period start	8:45
Real Time Period end	8:59
Drill Time:	1:45
Common for all Dilutions with no liquid flow prior to or during sampling. If Panel was used for liquid sampling then use data for liquid sample. (mR/hr)	
Point A	AS READ
Point B	AS READ
Point C	AS READ
Point D	AS READ
Point F	AS READ
Point E (contact)	AS READ
Common for all Dilutions (mR/min)	
Gamma Detector	AS READ
Undiluted Gas (mR/hr)	
Pig Contact (shield)	AS READ
Carry Shield Contact	AS READ
Syringe Contact	AS READ
Diluted Gas 100:1 (mR/hr)	
Pig Contact (shield)	AS READ
Carry Shield Contact	AS READ
Syringe Contact	AS READ
Diluted Gas 10000:1 (mR/hr)	
Pig Contact (shield)	AS READ
Carry Shield Contact	AS READ
Syringe Contact	AS READ

REACTOR CONTAINMENT
BUILDING ATMOSPHERE
POST ACCIDENT SAMPLING
SYSTEM READING

RCB ATMOSPHERE PASS READINGS	
Real Time period start	9:00
Real Time Period end	9:14
Drill Time:	2:00
Common for all Dilutions with no liquid flow prior to or during sampling. If Panel was used for liquid sampling then use data for liquid sample.	
(mR/hr)	
Point A	AS READ
Point B	AS READ
Point C	AS READ
Point D	AS READ
Point F	AS READ
Point E (contact)	AS READ
Common for all Dilutions (mR/min)	
Gamma Detector	AS READ
Undiluted Gas (mR/hr)	
Pig Contact (shield)	AS READ
Carry Shield Contact	AS READ
Syringe Contact	AS READ
Diluted Gas 100:1 (mR/hr)	
Pig Contact (shield)	AS READ
Carry Shield Contact	AS READ
Syringe Contact	AS READ
Diluted Gas 10000:1 (mR/hr)	
Pig Contact (shield)	AS READ
Carry Shield Contact	AS READ
Syringe Contact	AS READ

REACTOR CONTAINMENT
BUILDING ATMOSPHERE
POST ACCIDENT SAMPLING
SYSTEM READING

RCB ATMOSPHERE PASS READINGS	
Real Time period start	**9:15**
Real Time Period end	**9:29**
Drill Time:	**2:15**
Common for all Dilutions with no liquid flow prior to or during sampling. If Panel was used for liquid sampling then use data for liquid sample. (mR/hr)	
Point A	AS READ
Point B	AS READ
Point C	AS READ
Point D	AS READ
Point F	AS READ
Point E (contact)	2.06E-01
Common for all Dilutions (mR/min)	
Gamma Detector	AS READ
Undiluted Gas (mR/hr)	
Pig Contact (shield)	AS READ
Carry Shield Contact	AS READ
Syringe Contact	1.51E+00
Diluted Gas 100:1 (mR/hr)	
Pig Contact (shield)	AS READ
Carry Shield Contact	AS READ
Syringe Contact	AS READ
Diluted Gas 10000:1 (mR/hr)	
Pig Contact (shield)	AS READ
Carry Shield Contact	AS READ
Syringe Contact	AS READ

REACTOR CONTAINMENT
BUILDING ATMOSPHERE
POST ACCIDENT SAMPLING
SYSTEM READING

RCB ATMOSPHERE PASS READINGS	
Real Time period start	**9:30**
Real Time Period end	**9:44**
Drill Time:	**2:30**
Common for all Dilutions with no liquid flow prior to or during sampling. If Panel was used for liquid sampling then use data for liquid sample. (mR/hr)	
Point A	AS READ
Point B	AS READ
Point C	AS READ
Point D	AS READ
Point F	AS READ
Point E (contact)	7.02E-01
Common for all Dilutions (mR/min)	
Gamma Detector	AS READ
Undiluted Gas (mR/hr)	
Pig Contact (shield)	AS READ
Carry Shield Contact	AS READ
Syringe Contact	5.16E+00
Diluted Gas 100:1 (mR/hr)	
Pig Contact (shield)	AS READ
Carry Shield Contact	AS READ
Syringe Contact	AS READ
Diluted Gas 10000:1 (mR/hr)	
Pig Contact (shield)	AS READ
Carry Shield Contact	AS READ
Syringe Contact	AS READ

REACTOR CONTAINMENT
BUILDING ATMOSPHERE
POST ACCIDENT SAMPLING
SYSTEM READING

RCB ATMOSPHERE PASS READINGS	
Real Time period start	**9:45**
Real Time Period end	**9:59**
Drill Time:	**2:45**
Common for all Dilutions with no liquid flow prior to or during sampling. If Panel was used for liquid sampling then use data for liquid sample.	
(mR/hr)	
Point A	AS READ
Point B	AS READ
Point C	AS READ
Point D	AS READ
Point F	AS READ
Point E (contact)	1.43E+00
Common for all Dilutions (mR/min)	
Gamma Detector	3.15E-01
Undiluted Gas (mR/hr)	
Pig Contact (shield)	AS READ
Carry Shield Contact	AS READ
Syringe Contact	1.05E+01
Diluted Gas 100:1 (mR/hr)	
Pig Contact (shield)	AS READ
Carry Shield Contact	AS READ
Syringe Contact	AS READ
Diluted Gas 10000:1 (mR/hr)	
Pig Contact (shield)	AS READ
Carry Shield Contact	AS READ
Syringe Contact	AS READ

REACTOR CONTAINMENT
BUILDING ATMOSPHERE
POST ACCIDENT SAMPLING
SYSTEM READING

RCB ATMOSPHERE PASS READINGS	
Real Time period start	**10:00**
Real Time Period end	**10:14**
Drill Time:	**3:00**
Common for all Dilutions with no liquid flow prior to or during sampling. If Panel was used for liquid sampling then use data for liquid sample. (mR/hr)	
Point A	AS READ
Point B	AS READ
Point C	AS READ
Point D	AS READ
Point F	AS READ
Point E (contact)	2.40E+00
Common for all Dilutions (mR/min)	
Gamma Detector	5.29E-01
Undiluted Gas (mR/hr)	
Pig Contact (shield)	AS READ
Carry Shield Contact	AS READ
Syringe Contact	1.76E+01
Diluted Gas 100:1 (mR/hr)	
Pig Contact (shield)	AS READ
Carry Shield Contact	AS READ
Syringe Contact	AS READ
Diluted Gas 10000:1 (mR/hr)	
Pig Contact (shield)	AS READ
Carry Shield Contact	AS READ
Syringe Contact	AS READ

ex_PASS00R0
RCB_AP_ATMOSHPERE

REACTOR CONTAINMENT
BUILDING ATMOSPHERE
POST ACCIDENT SAMPLING
SYSTEM READING

RCB ATMOSPHERE PASS READINGS	
Real Time period start	**10:15**
Real Time Period end	**10:29**
Drill Time:	**3:15**
Common for all Dilutions with no liquid flow prior to or during sampling. If Panel was used for liquid sampling then use data for liquid sample. (mR/hr)	
Point A	AS READ
Point B	AS READ
Point C	AS READ
Point D	AS READ
Point F	AS READ
Point E (contact)	4.02E+00
Common for all Dilutions (mR/min)	
Gamma Detector	8.87E-01
Undiluted Gas (mR/hr)	
Pig Contact (shield)	AS READ
Carry Shield Contact	2.59E-01
Syringe Contact	2.95E+01
Diluted Gas 100:1 (mR/hr)	
Pig Contact (shield)	AS READ
Carry Shield Contact	AS READ
Syringe Contact	2.95E-01
Diluted Gas 10000:1 (mR/hr)	
Pig Contact (shield)	AS READ
Carry Shield Contact	AS READ
Syringe Contact	AS READ

REACTOR CONTAINMENT
BUILDING ATMOSPHERE
POST ACCIDENT SAMPLING
SYSTEM READING

RCB ATMOSPHERE PASS READINGS	
Real Time period start	**10:30**
Real Time Period end	**10:44**
Drill Time:	**3:30**
Common for all Dilutions with no liquid flow prior to or during sampling. If Panel was used for liquid sampling then use data for liquid sample. (mR/hr)	
Point A	AS READ
Point B	AS READ
Point C	AS READ
Point D	AS READ
Point F	AS READ
Point E (contact)	1.54E+01
Common for all Dilutions (mR/min)	
Gamma Detector	3.39E+00
Undiluted Gas (mR/hr)	
Pig Contact (shield)	AS READ
Carry Shield Contact	9.54E-01
Syringe Contact	1.13E+02
Diluted Gas 100:1 (mR/hr)	
Pig Contact (shield)	AS READ
Carry Shield Contact	AS READ
Syringe Contact	1.13E+00
Diluted Gas 10000:1 (mR/hr)	
Pig Contact (shield)	AS READ
Carry Shield Contact	AS READ
Syringe Contact	AS READ

REACTOR CONTAINMENT
BUILDING ATMOSPHERE
POST ACCIDENT SAMPLING
SYSTEM READING

RCB ATMOSPHERE PASS READINGS	
Real Time period start	**10:45**
Real Time Period end	**10:59**
Drill time:	**3:45**
Common for all Dilutions with no liquid flow prior to or during sampling. If Panel was used for liquid sampling then use data for liquid sample.	
(mR/hr)	
Point A	AS READ
Point B	AS READ
Point C	AS READ
Point D	AS READ
Point F	AS READ
Point E (contact)	2.13E+01
Common for all Dilutions (mR/min)	
Gamma Detector	4.70E+00
Undiluted Gas (mR/hr)	
Pig Contact (shield)	AS READ
Carry Shield Contact	1.30E+00
Syringe Contact	1.56E+02
Diluted Gas 100:1 (mR/hr)	
Pig Contact (shield)	AS READ
Carry Shield Contact	AS READ
Syringe Contact	1.56E+00
Diluted Gas 10000:1 (mR/hr)	
Pig Contact (shield)	AS READ
Carry Shield Contact	AS READ
Syringe Contact	AS READ

REACTOR CONTAINMENT
BUILDING ATMOSPHERE
POST ACCIDENT SAMPLING
SYSTEM READING

RCB ATMOSPHERE PASS READINGS	
Real Time period start	11:00
Real Time Period end	11:14
Drill Time:	4:00
Common for all Dilutions with no liquid flow prior to or during sampling. If Panel was used for liquid sampling then use data for liquid sample. (mR/hr)	
Point A	AS READ
Point B	AS READ
Point C	AS READ
Point D	AS READ
Point F	AS READ
Point E (contact)	2.27E+01
Common for all Dilutions (mR/min)	
Gamma Detector	5.01E+00
Undiluted Gas (mR/hr)	
Pig Contact (shield)	AS READ
Carry Shield Contact	1.40E+00
Syringe Contact	1.67E+02
Diluted Gas 100:1 (mR/hr)	
Pig Contact (shield)	AS READ
Carry Shield Contact	AS READ
Syringe Contact	1.67E+00
Diluted Gas 10000:1 (mR/hr)	
Pig Contact (shield)	AS READ
Carry Shield Contact	AS READ
Syringe Contact	AS READ

REACTOR CONTAINMENT
BUILDING ATMOSPHERE
POST ACCIDENT SAMPLING
SYSTEM READING

RCB ATMOSPHERE PASS READINGS	
Real Time period start	11:15
Real Time Period end	11:29
Drill Time:	4:15
Common for all Dilutions with no liquid flow prior to or during sampling. If Panel was used for liquid sampling then use data for liquid sample.	
(mR/hr)	
Point A	AS READ
Point B	AS READ
Point C	AS READ
Point D	4.83E-01
Point F	AS READ
Point E (contact)	1.26E+02
Common for all Dilutions (mR/min)	
Gamma Detector	2.78E+01
Undiluted Gas (mR/hr)	
Pig Contact (shield)	3.78E-01
Carry Shield Contact	6.03E+00
Syringe Contact	9.25E+02
Diluted Gas 100:1 (mR/hr)	
Pig Contact (shield)	AS READ
Carry Shield Contact	AS READ
Syringe Contact	9.25E+00
Diluted Gas 10000:1 (mR/hr)	
Pig Contact (shield)	AS READ
Carry Shield Contact	AS READ
Syringe Contact	9.25E-01

REACTOR CONTAINMENT
BUILDING ATMOSPHERE
POST ACCIDENT SAMPLING
SYSTEM READING

RCB ATMOSPHERE PASS READINGS

Real Time period start	**11:30**
Real Time Period end	**11:44**
Drill Time:	**4:30**

Common for all Dilutions with no liquid flow prior to or during sampling. If Panel was used for liquid sampling then use data for liquid sample. (mR/hr)

Point A	AS READ
Point B	AS READ
Point C	AS READ
Point D	8.33E-01
Point F	AS READ
Point E (contact)	2.17E+02
Common for all Dilutions (mR/min)	
Gamma Detector	4.79E+01
Undiluted Gas (mR/hr)	
Pig Contact (shield)	7.10E-01
Carry Shield Contact	1.14E+01
Syringe Contact	1.59E+03
Diluted Gas 100:1 (mR/hr)	
Pig Contact (shield)	AS READ
Carry Shield Contact	AS READ
Syringe Contact	1.59E+01
Diluted Gas 10000:1 (mR/hr)	
Pig Contact (shield)	AS READ
Carry Shield Contact	AS READ
Syringe Contact	1.59E+00

REACTOR CONTAINMENT
BUILDING ATMOSPHERE
POST ACCIDENT SAMPLING
SYSTEM READING

RCB ATMOSPHERE PASS READINGS	
Real Time period start	**11:45**
Real Time Period end	**11:59**
Drill Time:	**4:45**
Common for all Dilutions with no liquid flow prior to or during sampling. If Panel was used for liquid sampling then use data for liquid sample. (mR/hr)	
Point A	AS READ
Point B	AS READ
Point C	AS READ
Point D	8.48E-01
Point F	AS READ
Point E (contact)	2.20E+02
Common for all Dilutions (mR/min)	
Gamma Detector	4.86E+01
Undiluted Gas (mR/hr)	
Pig Contact (shield)	7.75E-01
Carry Shield Contact	1.26E+01
Syringe Contact	1.62E+03
Diluted Gas 100:1 (mR/hr)	
Pig Contact (shield)	AS READ
Carry Shield Contact	AS READ
Syringe Contact	1.62E+01
Diluted Gas 10000:1 (mR/hr)	
Pig Contact (shield)	AS READ
Carry Shield Contact	AS READ
Syringe Contact	1.62E+00

REACTOR CONTAINMENT
BUILDING ATMOSPHERE
POST ACCIDENT SAMPLING
SYSTEM READING

RCB ATMOSPHERE PASS READINGS	
Real Time period start	12:00
Real Time Period end	12:14
Drill Time:	5:00
Common for all Dilutions with no liquid flow prior to or during sampling. If Panel was used for liquid sampling then use data for liquid sample. (mR/hr)	
Point A	AS READ
Point B	AS READ
Point C	AS READ
Point D	8.36E-01
Point F	AS READ
Point E (contact)	2.17E+02
Common for all Dilutions (mR/min)	
Gamma Detector	4.79E+01
Undiluted Gas (mR/hr)	
Pig Contact (shield)	7.97E-01
Carry Shield Contact	1.30E+01
Syringe Contact	1.60E+03
Diluted Gas 100:1 (mR/hr)	
Pig Contact (shield)	AS READ
Carry Shield Contact	AS READ
Syringe Contact	1.60E+01
Diluted Gas 10000:1 (mR/hr)	
Pig Contact (shield)	AS READ
Carry Shield Contact	AS READ
Syringe Contact	1.60E+00

REACTOR CONTAINMENT
BUILDING ATMOSPHERE
POST ACCIDENT SAMPLING
SYSTEM READING

RCB ATMOSPHERE PASS READINGS

Real Time period start	**12:15**
Real Time Period end	**12:29**
Drill Time:	**5:15**
Common for all Dilutions with no liquid flow prior to or during sampling. If Panel was used for liquid sampling then use data for liquid sample.	
(mR/hr)	
Point A	AS READ
Point B	AS READ
Point C	AS READ
Point D	8.40E-01
Point F	AS READ
Point E (contact)	2.18E+02
Common for all Dilutions (mR/min)	
Gamma Detector	4.82E+01
Undiluted Gas (mR/hr)	
Pig Contact (shield)	8.20E-01
Carry Shield Contact	1.33E+01
Syringe Contact	1.60E+03
Diluted Gas 100:1 (mR/hr)	
Pig Contact (shield)	AS READ
Carry Shield Contact	AS READ
Syringe Contact	1.60E+01
Diluted Gas 10000:1 (mR/hr)	
Pig Contact (shield)	AS READ
Carry Shield Contact	AS READ
Syringe Contact	1.60E+00

REACTOR CONTAINMENT
BUILDING ATMOSPHERE
POST ACCIDENT SAMPLING
SYSTEM READING

RCB ATMOSPHERE PASS READINGS	
Real time period start	12:30
Real Time Period end	12:44
Drill time:	5:30
Common for all Dilutions with no liquid flow prior to or during sampling. If Panel was used for liquid sampling then use data for liquid sample. (mR/hr)	
Point A	AS READ
Point B	AS READ
Point C	AS READ
Point D	8.55E-01
Point F	AS READ
Point E (contact)	2.22E+02
Common for all Dilutions (mR/min)	
Gamma Detector	4.90E+01
Undiluted Gas (mR/hr)	
Pig Contact (shield)	8.44E-01
Carry Shield Contact	1.38E+01
Syringe Contact	1.63E+03
Diluted Gas 100:1 (mR/hr)	
Pig Contact (shield)	AS READ
Carry Shield Contact	AS READ
Syringe Contact	1.63E+01
Diluted Gas 10000:1 (mR/hr)	
Pig Contact (shield)	AS READ
Carry Shield Contact	AS READ
Syringe Contact	1.63E+00

REACTOR CONTAINMENT
BUILDING ATMOSPHERE
POST ACCIDENT SAMPLING
SYSTEM READING

RCB ATMOSPHERE PASS READINGS	
Real Time period start	12:45
Real Time Period end	12:59
Drill Time:	5:45
Common for all Dilutions with no liquid flow prior to or during sampling. If Panel was used for liquid sampling then use data for liquid sample. (mR/hr)	
Point A	AS READ
Point B	AS READ
Point C	AS READ
Point D	8.73E-01
Point F	AS READ
Point E (contact)	2.27E+02
Common for all Dilutions (mR/min)	
Gamma Detector	5.00E+01
Undiluted Gas (mR/hr)	
Pig Contact (shield)	8.69E-01
Carry Shield Contact	1.42E+01
Syringe Contact	1.66E+03
Diluted Gas 100:1 (mR/hr)	
Pig Contact (shield)	AS READ
Carry Shield Contact	AS READ
Syringe Contact	1.66E+01
Diluted Gas 10000:1 (mR/hr)	
Pig Contact (shield)	AS READ
Carry Shield Contact	AS READ
Syringe Contact	1.66E+00

REACTOR CONTAINMENT
BUILDING ATMOSPHERE
POST ACCIDENT SAMPLING
SYSTEM READING

RCB ATMOSPHERE PASS READINGS	
Real Time period start	13:00
Real Time Period end	13:14
Drill Time:	6:00
Common for all Dilutions with no liquid flow prior to or during sampling. If Panel was used for liquid sampling then use data for liquid sample. (mR/hr)	
Point A	AS READ
Point B	AS READ
Point C	AS READ
Point D	8.93E-01
Point F	AS READ
Point E (contact)	2.32E+02
Common for all Dilutions (mR/min)	
Gamma Detector	5.11E+01
Undiluted Gas (mR/hr)	
Pig Contact (shield)	8.92E-01
Carry Shield Contact	1.45E+01
Syringe Contact	1.70E+03
Diluted Gas 100:1 (mR/hr)	
Pig Contact (shield)	AS READ
Carry Shield Contact	AS READ
Syringe Contact	1.70E+01
Diluted Gas 10000:1 (mR/hr)	
Pig Contact (shield)	AS READ
Carry Shield Contact	AS READ
Syringe Contact	1.70E+00

REACTOR CONTAINMENT
BUILDING ATMOSPHERE
POST ACCIDENT SAMPLING
SYSTEM READING

RCB ATMOSPHERE PASS READINGS	
Real Time period start	**13:15**
Real Time Period end	**13:29**
Drill Time:	**6:15**
Common for all Dilutions with no liquid flow prior to or during sampling. If Panel was used for liquid sampling then use data for liquid sample. (mR/hr)	
Point A	AS READ
Point B	AS READ
Point C	AS READ
Point D	9.28E-01
Point F	AS READ
Point E (contact)	2.41E+02
Common for all Dilutions (mR/min)	
Gamma Detector	5.31E+01
Undiluted Gas (mR/hr)	
Pig Contact (shield)	9.30E-01
Carry Shield Contact	1.52E+01
Syringe Contact	1.77E+03
Diluted Gas 100:1 (mR/hr)	
Pig Contact (shield)	AS READ
Carry Shield Contact	AS READ
Syringe Contact	1.77E+01
Diluted Gas 10000:1 (mR/hr)	
Pig Contact (shield)	AS READ
Carry Shield Contact	AS READ
Syringe Contact	1.77E+00

REACTOR CONTAINMENT
BUILDING ATMOSPHERE
POST ACCIDENT SAMPLING
SYSTEM READING

RCB ATMOSPHERE PASS READINGS	
Real time period start	**13:30**
Real Time Period end	**13:59**
Dilt time:	**6:30**
Common for all Dilutions with no liquid flow prior to or during sampling. If Panel was used for liquid sampling then use data for liquid sample. (mR/hr)	
Point A	AS READ
Point B	AS READ
Point C	AS READ
Point D	8.62E-01
Point F	AS READ
Point E (contact)	2.24E+02
Common for all Dilutions (mR/min)	
Gamma Detector	4.93E+01
Undiluted Gas (mR/hr)	
Pig Contact (shield)	8.88E-01
Carry Shield Contact	1.45E+01
Syringe Contact	1.64E+03
Diluted Gas 100:1 (mR/hr)	
Pig Contact (shield)	AS READ
Carry Shield Contact	AS READ
Syringe Contact	1.64E+01
Diluted Gas 10000:1 (mR/hr)	
Pig Contact (shield)	AS READ
Carry Shield Contact	AS READ
Syringe Contact	1.64E+00

REACTOR CONTAINMENT
BUILDING ATMOSPHERE
POST ACCIDENT SAMPLING
SYSTEM READING

RCB ATMOSPHERE PASS READINGS	
Real Time period start	**14:00**
Real Time Period end	**14:14**
Drill Time:	**7:00**
Common for all Dilutions with no liquid flow prior to or during sampling. If Panel was used for liquid sampling then use data for liquid sample. (mR/hr)	
Point A	AS READ
Point B	AS READ
Point C	AS READ
Point D	7.90E-01
Point F	AS READ
Point E (contact)	2.05E+02
Common for all Dilutions (mR/min)	
Gamma Detector	4.52E+01
Undiluted Gas (mR/hr)	
Pig Contact (shield)	8.29E-01
Carry Shield Contact	1.36E+01
Syringe Contact	1.50E+03
Diluted Gas 100:1 (mR/hr)	
Pig Contact (shield)	AS READ
Carry Shield Contact	AS READ
Syringe Contact	1.50E+01
Diluted Gas 10000:1 (mR/hr)	
Pig Contact (shield)	AS READ
Carry Shield Contact	AS READ
Syringe Contact	1.50E+00

MECHANICAL & ELECTRIC AUXILIARY BUILDING 10' LEVEL

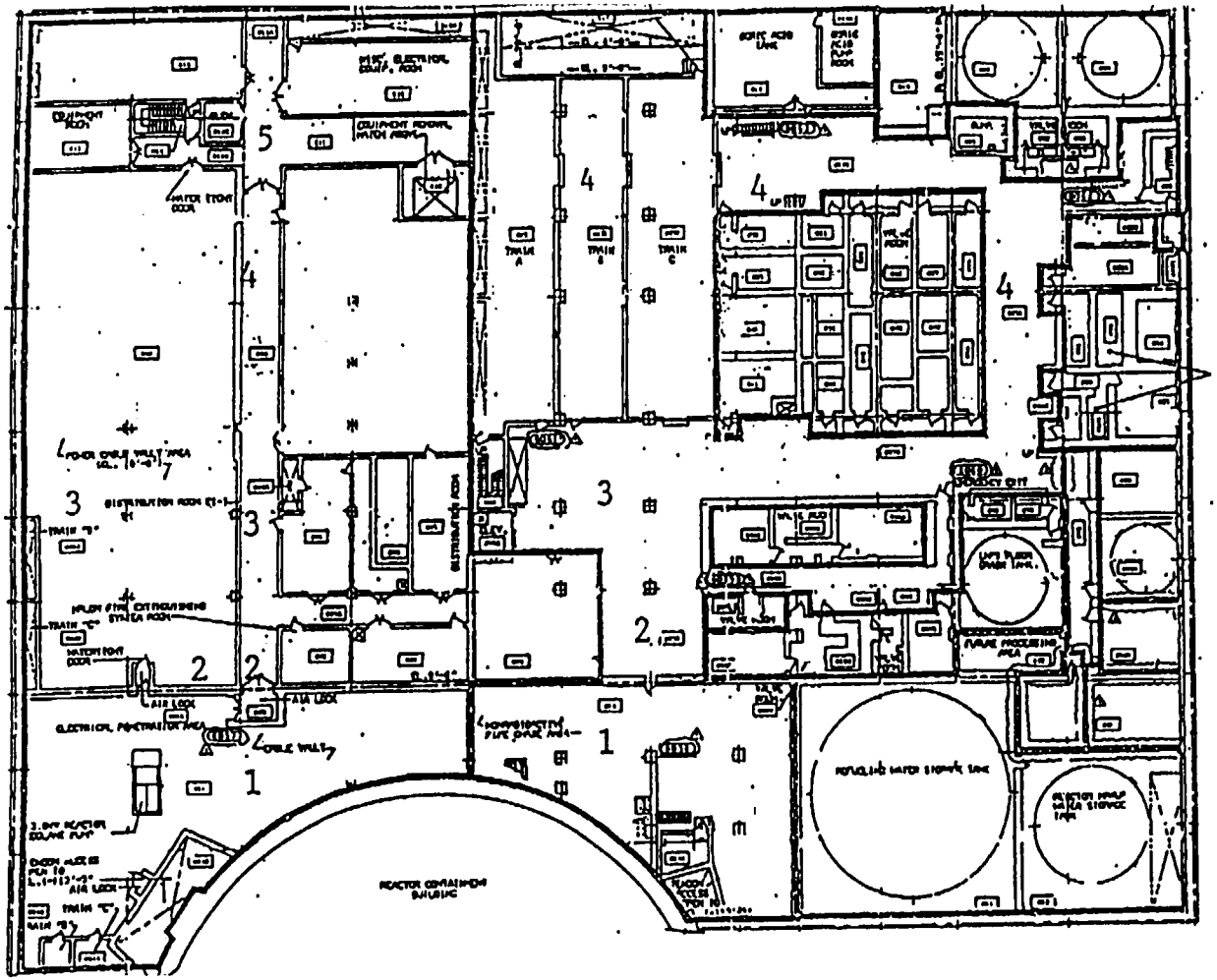

Dose Rate is mR/hr									
Area	07:00 to 09:30	10:00	10:30	11:00	11:30	12:00	13:00	13:30	13:30 to 14:00
1	AS READ	3.4	5	5.4	6.2	6.6	6.6	6.6	6.6
2	AS READ	AS READ	AS READ	AS READ	AS READ	AS READ	AS READ	AS READ	AS READ
3	AS READ	AS READ	AS READ	AS READ	AS READ	AS READ	AS READ	AS READ	AS READ
4	AS READ	AS READ	AS READ	AS READ	AS READ	AS READ	AS READ	AS READ	AS READ
5	AS READ	AS READ	AS READ	AS READ	AS READ	AS READ	AS READ	AS READ	AS READ
	Area 1 readings are contact with Containment Wall								

Note:
ALL AIR SAMPLES ARE AS READ.
CONTAMINATION SURVEY'S ARE AS READ.

MECHANICAL & ELECTRIC AUXILIARY BUILDING 23' and 29' LEVELs

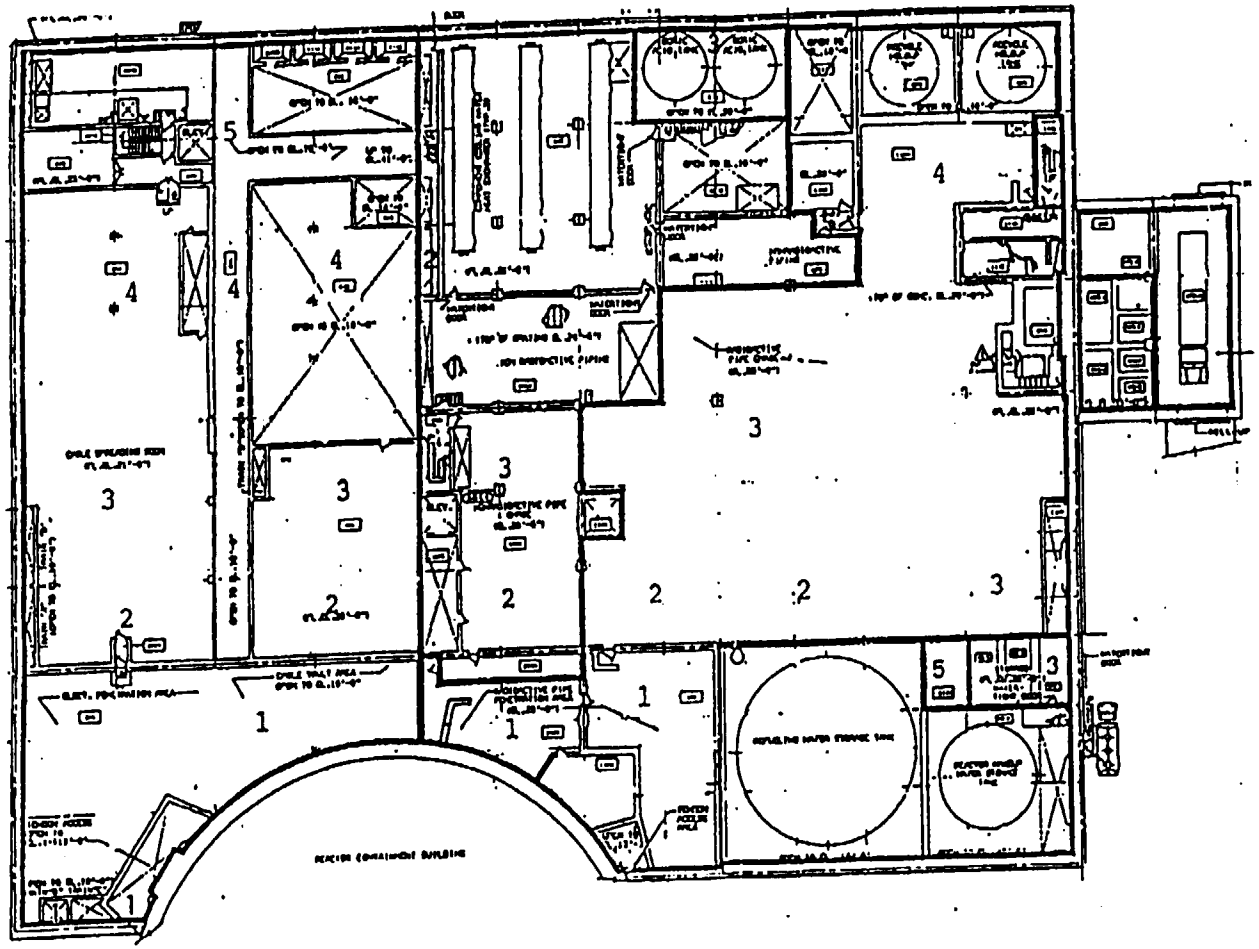

Dose Rate is mR/hr									
Area	07:00 to 09:30	10:00	10:30	11:00	11:30	12:00	13:00	13:30	13:30 to 14:00
1	AS READ	3.4	5	5.4	6.2	6.6	6.6	6.6	6.6
2	AS READ	AS READ	AS READ	AS READ	AS READ	AS READ	AS READ	AS READ	AS READ
3	AS READ	AS READ	AS READ	AS READ	AS READ	AS READ	AS READ	AS READ	AS READ
4	AS READ	AS READ	AS READ	AS READ	AS READ	AS READ	AS READ	AS READ	AS READ
5	AS READ	AS READ	AS READ	AS READ	AS READ	AS READ	AS READ	AS READ	AS READ
	Area 1 readings are contact with Containment Wall								

Note:
ALL AIR SAMPLES ARE AS READ.
CONTAMINATION SURVEY'S ARE AS READ.

MECHANICAL ELECTRIC AUXILIARY BUILDING 35' and 41' LEVEL

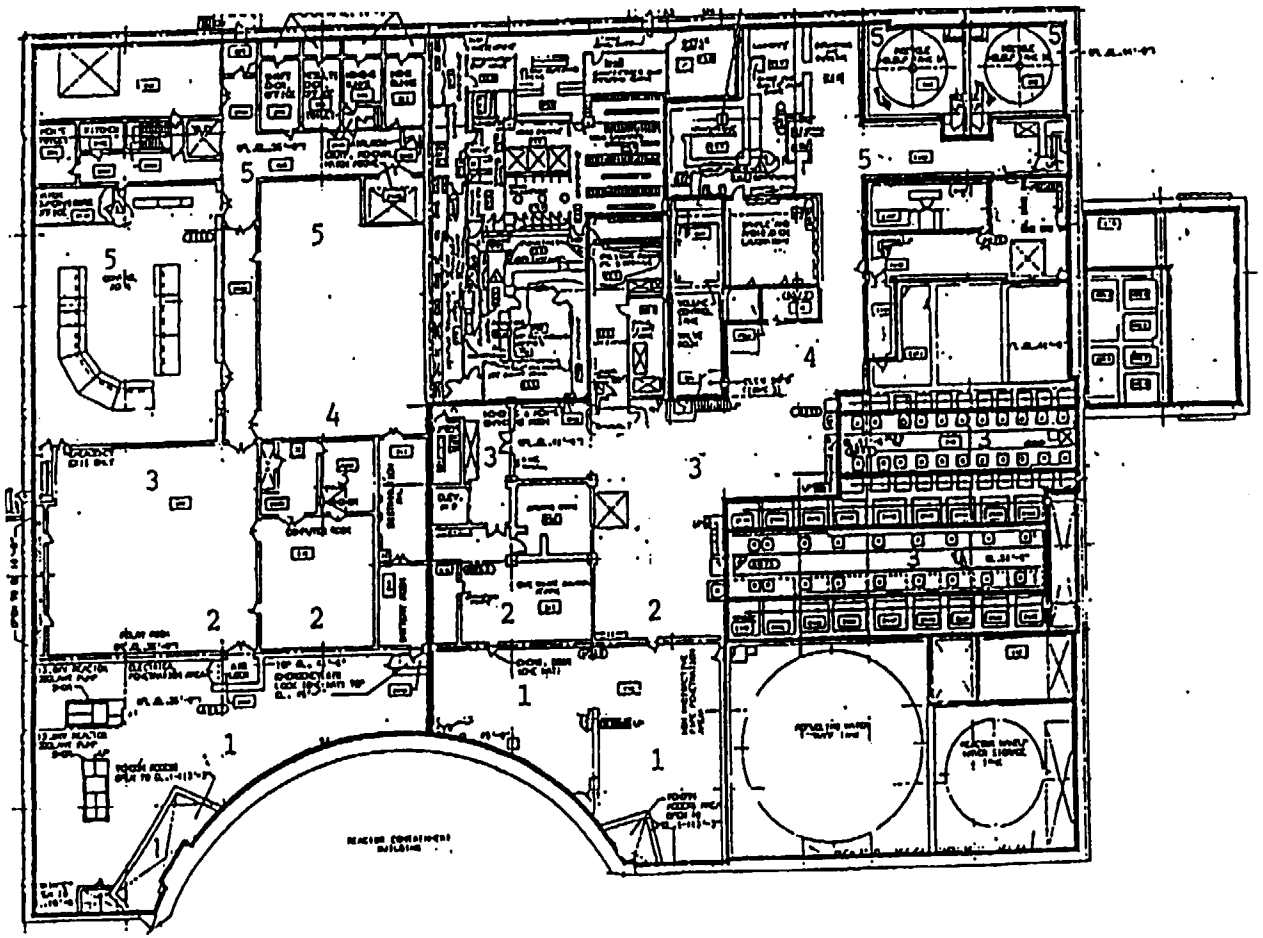

Dose Rate is mR/hr									
Area	07:00 to 09:30	10:00	10:30	11:00	11:30	12:00	13:00	13:30	13:30 to 14:00
1	AS READ	3.4	5	5.4	6.2	6.6	6.6	6.6	6.6
2	AS READ	AS READ	AS READ	AS READ	AS READ	AS READ	AS READ	AS READ	AS READ
3	AS READ	AS READ	AS READ	AS READ	AS READ	AS READ	AS READ	AS READ	AS READ
4	AS READ	AS READ	AS READ	AS READ	AS READ	AS READ	AS READ	AS READ	AS READ
5	AS READ	AS READ	AS READ	AS READ	AS READ	AS READ	AS READ	AS READ	AS READ
Note:	Area 1 readings are contact with Containment Wall								

Note:
ALL AIR SAMPLES ARE AS READ.
CONTAMINATION SURVEY'S ARE AS READ.

MECHANICAL & ELECTRIC AUXILIARY BUILDING 60' LEVEL

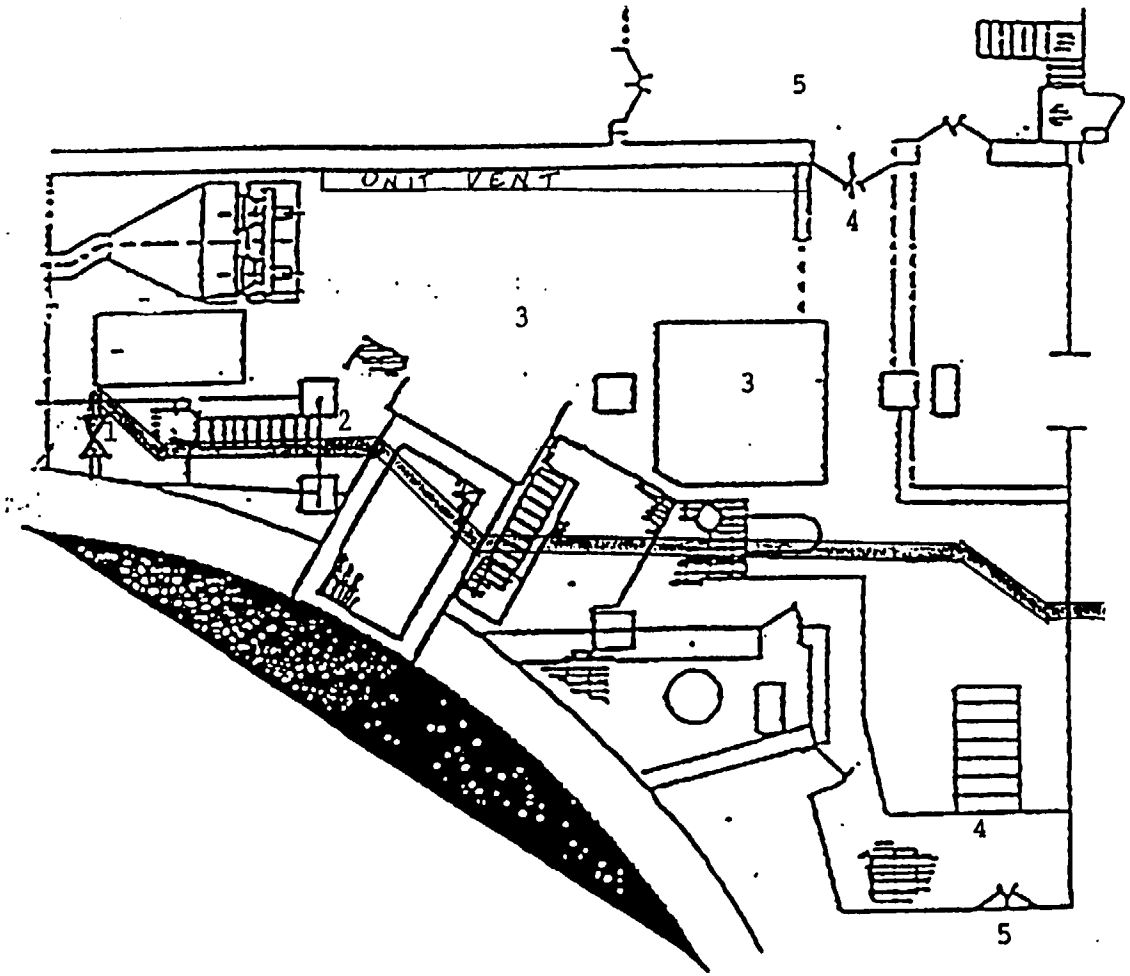

Area	07:00 to 11:30	11:45	12:00	12:15	12:30	12:45	13:00	13:15	13:30 to 14:00	Note:
1	AS READ	16380	18385	19557	20055	21558	18658	17161	1302	ALL AIR SAMPLES ARE
2	AS READ	3276	3677	3911	4021	4088	3625	3432	260	AS READ.
3	AS READ	41	46	49	52	54	41	43	3	CONTAMINATION
4	AS READ	18	20	22	24	23	22	19	1	SURVEY'S ARE AS
5	AS READ	3	7	8	9	11	10	7	1	READ.

METEOROLOGICAL DATA	
Real Time:	7:00
Drill Time:	0:00
Temperature Difference (F)	-1.40
Stability Class (A=1, B=2, C=3, D=4, E=5, F=6, G=7)	3
Wind Speed (mph)	7.00
Wind Direction (degrees)	70.00
Ambient Temperature (F)	73.00
Dew Point (F)	45.00
Solar Radiation (langly)	0.60
Precipitation (inch)	0.00

METEOROLOGICAL DATA	
Roll Time:	8:00
Drill Time:	1:00
Temperature Difference (F)	-1.40
Stability Class (A=1, B=2, C=3, D=4, E=5, F=6, G=7)	3
Wind Speed (mph)	7.00
Wind Direction (degrees)	70.00
Ambient Temperature (F)	78.00
Dew Point (F)	45.00
Solar Radiation (langly)	0.60
Precipitation (inch)	0.00

METEOROLOGICAL DATA	
Real Time:	9:00
Drill Time:	2:00
Temperature Difference (F)	-1.40
Stability Class (A=1, B=2, C=3, D=4, E=5, F=6, G=7)	3
Wind Speed (mph)	7.00
Wind Direction (degrees)	70.00
Ambient Temperature (F)	80.00
Dew Point (F)	45.00
Solar Radiation (langly)	0.80
Precipitation (inch)	0.00

METEOROLOGICAL DATA	
Release Time:	10:00
Drill Time:	3:00
Temperature Difference (F)	-1.40
Stability Class (A=1, B=2, C=3, D=4, E=5, F=6, G=7)	3
Wind Speed (mph)	7.00
Wind Direction (degrees)	70.00
Ambient Temperature (F)	82.00
Dew Point (F)	45.00
Solar Radiation (langly)	0.80
Precipitation (inch)	0.00

METEOROLOGICAL DATA	
Real Time:	11:00
Drill Time:	4:00
Temperature Difference (F)	-1.40
Stability Class (A=1, B=2, C=3, D=4, E=5, F=6, G=7)	3
Wind Speed (mph)	7.00
Wind Direction (degrees)	70.00
Ambient Temperature (F)	83.00
Dew Point (F)	45.00
Solar Radiation (langly)	0.80
Precipitation (inch)	0.00

METEOROLOGICAL DATA	
Real Time:	12:00
Drill Time:	5:00
Temperature Difference (F)	-1.40
Stability Class (A=1, B=2, C=3, D=4, E=5, F=6, G=7)	3
Wind Speed (mph)	7.00
Wind Direction (degrees)	70.00
Ambient Temperature (F)	84.00
Dew Point (F)	45.00
Solar Radiation (langly)	0.80
Precipitation (inch)	0.00

METEOROLOGICAL DATA	
Real Time:	13:00
Drill Time:	6:00
Temperature Difference (F)	-1.40
Stability Class (A=1, B=2, C=3, D=4, E=5, F=6, G=7)	3
Wind Speed (mph)	7.00
Wind Direction (degrees)	70.00
Ambient Temperature (F)	86.00
Dew Point (F)	45.00
Solar Radiation (langly)	0.80
Precipitation (inch)	0.00

METEOROLOGICAL DATA	
Real Time:	**14:00**
Drill Time:	**7:00**
Temperature Difference (F)	-1.40
Stability Class (A=1, B=2, C=3, D=4, E=5, F=6, G=7)	3
Wind Speed (mph)	7.00
Wind Direction (degrees)	70.00
Ambient Temperature (F)	87.00
Dew Point (F)	45.00
Solar Radiation (langly)	0.80
Precipitation (inch)	0.00

ONSITE SURVEY INFORMATION

TIME: 11:00

Location	Dose Rate (mrem/hr)	Noble Gas (uCi/cc)	Particulates (uCi/cc)	Particulates CPM/10cft	Iodines (uCi/cc)	Iodines CPM/10cft	Deposition O. W. (mR/hr)	Deposition C. W. (mR/hr)	Frisker CPM/100cm2
0-400 Feet	0.00E+00	0.00E+00	0.00E+00	AS READ	0.00E+00	AS READ	AS READ	AS READ	AS READ
200 ' Off-Axis	0.00E+00	0.00E+00	0.00E+00	AS READ	0.00E+00	AS READ	AS READ	AS READ	AS READ
400 ' Off-Axis	0.00E+00	0.00E+00	0.00E+00	AS READ	0.00E+00	AS READ	AS READ	AS READ	AS READ
400-800 Feet	0.00E+00	0.00E+00	0.00E+00	AS READ	0.00E+00	AS READ	AS READ	AS READ	AS READ
200 ' Off-Axis	0.00E+00	0.00E+00	0.00E+00	AS READ	0.00E+00	AS READ	AS READ	AS READ	AS READ
400 ' Off-Axis	0.00E+00	0.00E+00	0.00E+00	AS READ	0.00E+00	AS READ	AS READ	AS READ	AS READ
800-1200 Feet	0.00E+00	0.00E+00	0.00E+00	AS READ	0.00E+00	AS READ	AS READ	AS READ	AS READ
200 ' Off-Axis	0.00E+00	0.00E+00	0.00E+00	AS READ	0.00E+00	AS READ	AS READ	AS READ	AS READ
400 ' Off-Axis	0.00E+00	0.00E+00	0.00E+00	AS READ	0.00E+00	AS READ	AS READ	AS READ	AS READ

Abbreviations:

O.W. = Open Window
C.W. = Closed Window

CPM=counts per minute
LMD = Less than Minimum Detectable

Shine Dose Rate from Containment Wall on West Side Only, Contact as Well (mrem/hr) 0.00E+00

ONSITE SURVEY INFORMATION

TIME: 11:15

Location	Dose Rate (mrem/hr)	Noble Gas (uCi/cc)	Particulates (uCi/cc)	Particulates CPM/10cft	Iodines (uCi/cc)	Iodines CPM/10cft	Deposition O. W. (mR/hr)	Deposition C. W. (mR/hr)	Frisker CPM/100cm2
0-400 Feet	0.00E+00	0.00E+00	0.00E+00	AS READ	0.00E+00	AS READ	AS READ	AS READ	AS READ
200 ' Off-Axis	0.00E+00	0.00E+00	0.00E+00	AS READ	0.00E+00	AS READ	AS READ	AS READ	AS READ
400 ' Off-Axis	0.00E+00	0.00E+00	0.00E+00	AS READ	0.00E+00	AS READ	AS READ	AS READ	AS READ
400-800 Feet	0.00E+00	0.00E+00	0.00E+00	AS READ	0.00E+00	AS READ	AS READ	AS READ	AS READ
200 ' Off-Axis	0.00E+00	0.00E+00	0.00E+00	AS READ	0.00E+00	AS READ	AS READ	AS READ	AS READ
400 ' Off-Axis	0.00E+00	0.00E+00	0.00E+00	AS READ	0.00E+00	AS READ	AS READ	AS READ	AS READ
800-1200 Feet	0.00E+00	0.00E+00	0.00E+00	AS READ	0.00E+00	AS READ	AS READ	AS READ	AS READ
200 ' Off-Axis	0.00E+00	0.00E+00	0.00E+00	AS READ	0.00E+00	AS READ	AS READ	AS READ	AS READ
400 ' Off-Axis	0.00E+00	0.00E+00	0.00E+00	AS READ	0.00E+00	AS READ	AS READ	AS READ	AS READ

Abbreviations:

O.W. = Open Window
C.W. = Closed Window
CPM=counts per minute
LMD = Less than Minimum Detectable

Shine Dose Rate from Containment Wall on West Side Only, Contact as Well (mrem/hr) 1.44E+00

ONSITE SURVEY INFORMATION

TIME: 11:30

Location	Dose Rate (mrem/hr)	Noble Gas (uCi/cc)	Particulates (uCi/cc)	Particulates CPM/10cft	Iodines (uCi/cc)	Iodines CPM/10cft	Deposition O. W. (mR/hr)	Deposition C. W. (mR/hr)	Frisker CPM/100cm2
0-400 Feet	0.00E+00	0.00E+00	0.00E+00	AS READ	0.00E+00	AS READ	AS READ	AS READ	AS READ
200 ' Off-Axis	0.00E+00	0.00E+00	0.00E+00	AS READ	0.00E+00	AS READ	AS READ	AS READ	AS READ
400 ' Off-Axis	0.00E+00	0.00E+00	0.00E+00	AS READ	0.00E+00	AS READ	AS READ	AS READ	AS READ
400-800 Feet	0.00E+00	0.00E+00	0.00E+00	AS READ	0.00E+00	AS READ	AS READ	AS READ	AS READ
200 ' Off-Axis	0.00E+00	0.00E+00	0.00E+00	AS READ	0.00E+00	AS READ	AS READ	AS READ	AS READ
400 ' Off-Axis	0.00E+00	0.00E+00	0.00E+00	AS READ	0.00E+00	AS READ	AS READ	AS READ	AS READ
800-1200 Feet	0.00E+00	0.00E+00	0.00E+00	AS READ	0.00E+00	AS READ	AS READ	AS READ	AS READ
200 ' Off-Axis	0.00E+00	0.00E+00	0.00E+00	AS READ	0.00E+00	AS READ	AS READ	AS READ	AS READ
400 ' Off-Axis	0.00E+00	0.00E+00	0.00E+00	AS READ	0.00E+00	AS READ	AS READ	AS READ	AS READ

Abbreviations:

O.W. = Open Window
C.W. = Closed Window
CPM=counts per minute
LMD = Less than Minimum Detectable

Shine Dose Rate from Containment Wall on West Side Only, Contact as Well (mrem/hr) 1.97E+00

ONSITE SURVEY INFORMATION

TIME: 11:45

Location	Dose Rate (mrem/hr)	Noble Gas (uCi/cc)	Particulates (uCi/cc)	Particulates CPM/10cft	Iodines (uCi/cc)	Iodines CPM/10cft	Deposition O. W. (mR/hr)	Deposition C. W. (mR/hr)	Frisker CPM/100cm2
0-400 Feet	8.26E+03	2.58E-02	2.20E-03	1.39E+08	1.07E-06	3.29E+03	5.02E+01	7.71E-02	9.59E+07
200 ' Off-Axis	5.77E+00	1.80E-05	1.54E-06	9.68E+04	7.46E-10	2.30E+00	1.87E-01	2.88E-04	3.43E+05
400 ' Off-Axis	1.97E-09	6.15E-15	5.25E-16	3.30E-05	2.54E-19	7.83E-10	1.53E-01	2.34E-04	2.77E+05
400-800 Feet	4.44E+03	1.39E-02	1.18E-03	7.45E+07	5.74E-07	1.77E+03	2.70E+01	4.15E-02	5.17E+07
200 ' Off-Axis	5.56E+02	1.74E-03	1.48E-04	9.32E+06	7.18E-08	2.21E+02	3.52E+00	5.41E-03	6.71E+06
400 ' Off-Axis	1.09E+00	3.41E-06	2.91E-07	1.83E+04	1.41E-10	4.34E-01	1.59E-01	2.44E-04	2.89E+05
800-1200 Feet	2.64E+03	8.24E-03	7.03E-04	4.42E+07	3.41E-07	1.05E+03	1.61E+01	2.47E-02	3.08E+07
200 ' Off-Axis	9.71E+02	3.03E-03	2.59E-04	1.63E+07	1.25E-07	3.86E+02	6.03E+00	9.26E-03	1.15E+07
400 ' Off-Axis	4.85E+01	1.52E-04	1.29E-05	8.13E+05	6.26E-09	1.93E+01	4.46E-01	6.85E-04	8.38E+05

Abbreviations:

O.W. = Open Window
C.W. = Closed Window
CPM=counts per minute
LMD = Less than Minimum Detectable

Shine Dose Rate from Containment Wall on West Side Only, Contact as Well (mrem/hr) 1.51E+00

ONSITE SURVEY INFORMATION

TIME: 12:00 – 13:00

Location	Dose Rate (mrem/hr)	Noble Gas (uCi/cc)	Particulates (uCi/cc)	Particulates CPM/10cft	Iodines (uCi/cc)	Iodines CPM/10cft	Deposition O. W. (mR/hr)	Deposition C. W. (mR/hr)	Frisker CPM/100cm2
0-400 Feet	1.85E+04	6.34E-02	4.86E-03	3.06E+08	1.37E-06	4.23E+03	9.68E+01	1.49E-01	2.12E+08
200 ' Off-Axis	1.29E+01	4.43E-05	3.40E-06	2.14E+05	9.60E-10	2.96E+00	5.94E-01	9.13E-04	1.26E+06
400 ' Off-Axis	4.40E-09	1.51E-14	1.16E-15	7.29E-05	3.27E-19	1.01E-09	5.27E-01	8.10E-04	1.11E+06
400-800 Feet	9.93E+03	3.41E-02	2.61E-03	1.64E+08	7.39E-07	2.28E+03	5.23E+01	8.03E-02	1.15E+08
200 ' Off-Axis	1.24E+03	4.27E-03	3.27E-04	2.06E+07	9.25E-08	2.85E+02	7.01E+00	1.08E-02	1.53E+07
400 ' Off-Axis	2.44E+00	8.38E-06	6.43E-07	4.04E+04	1.82E-10	5.59E-01	5.40E-01	8.29E-04	1.14E+06
800-1200 Feet	5.89E+03	2.02E-02	1.55E-03	9.76E+07	4.39E-07	1.35E+03	3.12E+01	4.80E-02	6.84E+07
200 ' Off-Axis	2.17E+03	7.45E-03	5.72E-04	3.59E+07	1.61E-07	4.97E+02	1.18E+01	1.82E-02	2.59E+07
400 ' Off-Axis	1.08E+02	3.72E-04	2.85E-05	1.79E+06	8.07E-09	2.48E+01	1.09E+00	1.68E-03	2.35E+06

Abbreviations:

O.W. = Open Window
C.W. = Closed Window

CPM=counts per minute
LMD = Less than Minimum Detectable

Shine Dose Rate from Containment Wall on West Side Only, Contact as Well (mrem/hr) 1.17E+00

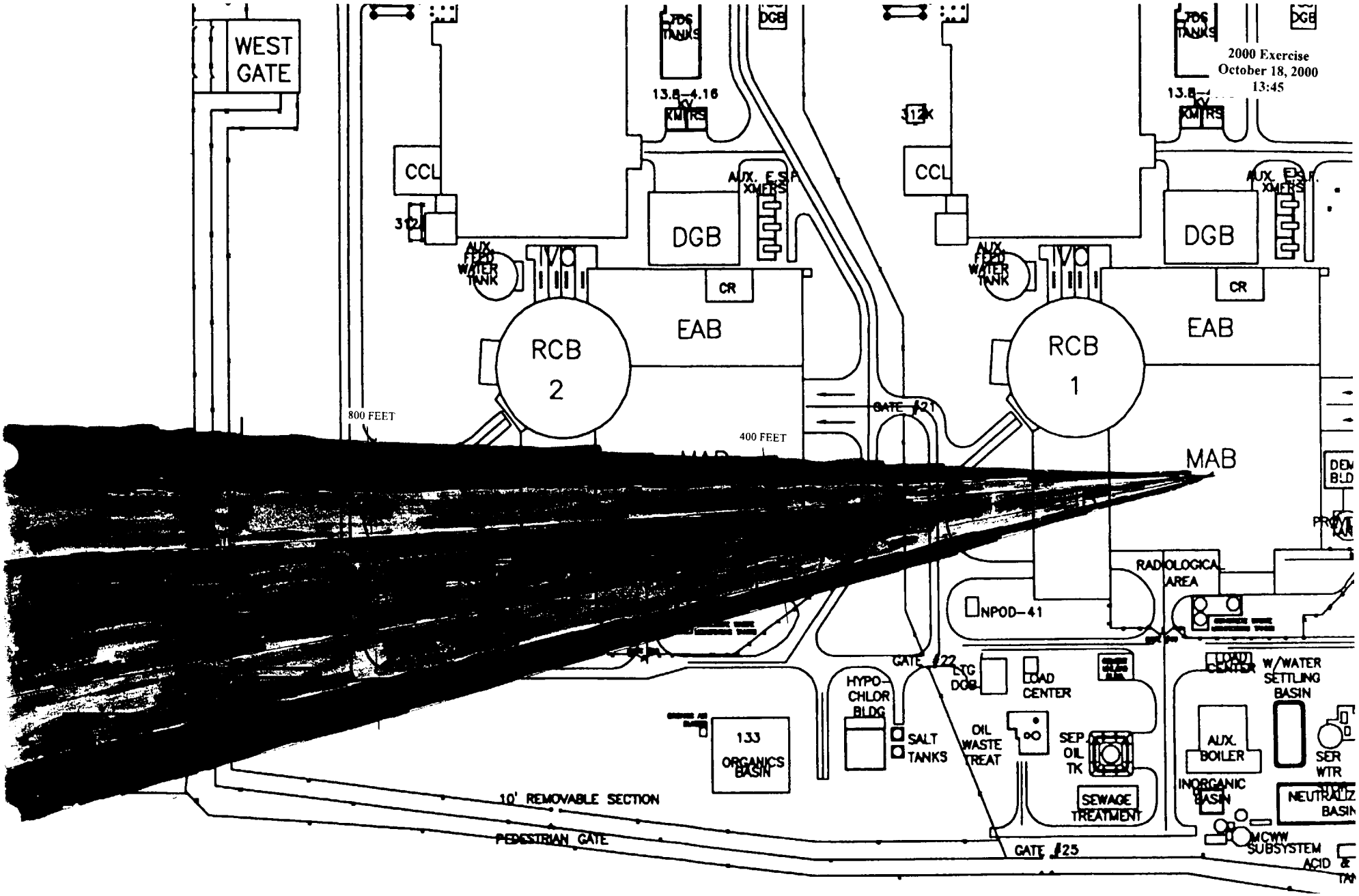
2000 Exercise
October 18, 2000
13:45
WEST GATE
CCL
DGB
EAB
RCB 2
RCB 1
CR
AUX. FEED WATER TANK
AUX. E.S.F. XMERS
13.8-4.16 KV XMERS
GATE #21
GATE #22
GATE #25
800 FEET
400 FEET
MAB
RADIOLOGICAL AREA
NPOD-41
LOAD CENTER
W/WATER SETTLING BASIN
HYPO-CHLOR BLDG
SALT TANKS
OIL WASTE TREAT
SEP OIL TK
SEWAGE TREATMENT
133 ORGANICS BASIN
AUX. BOILER
INORGANIC BASIN
NEUTRALIZ BASIN
MCWW SUBSYSTEM
10' REMOVABLE SECTION
PEDESTRIAN GATE

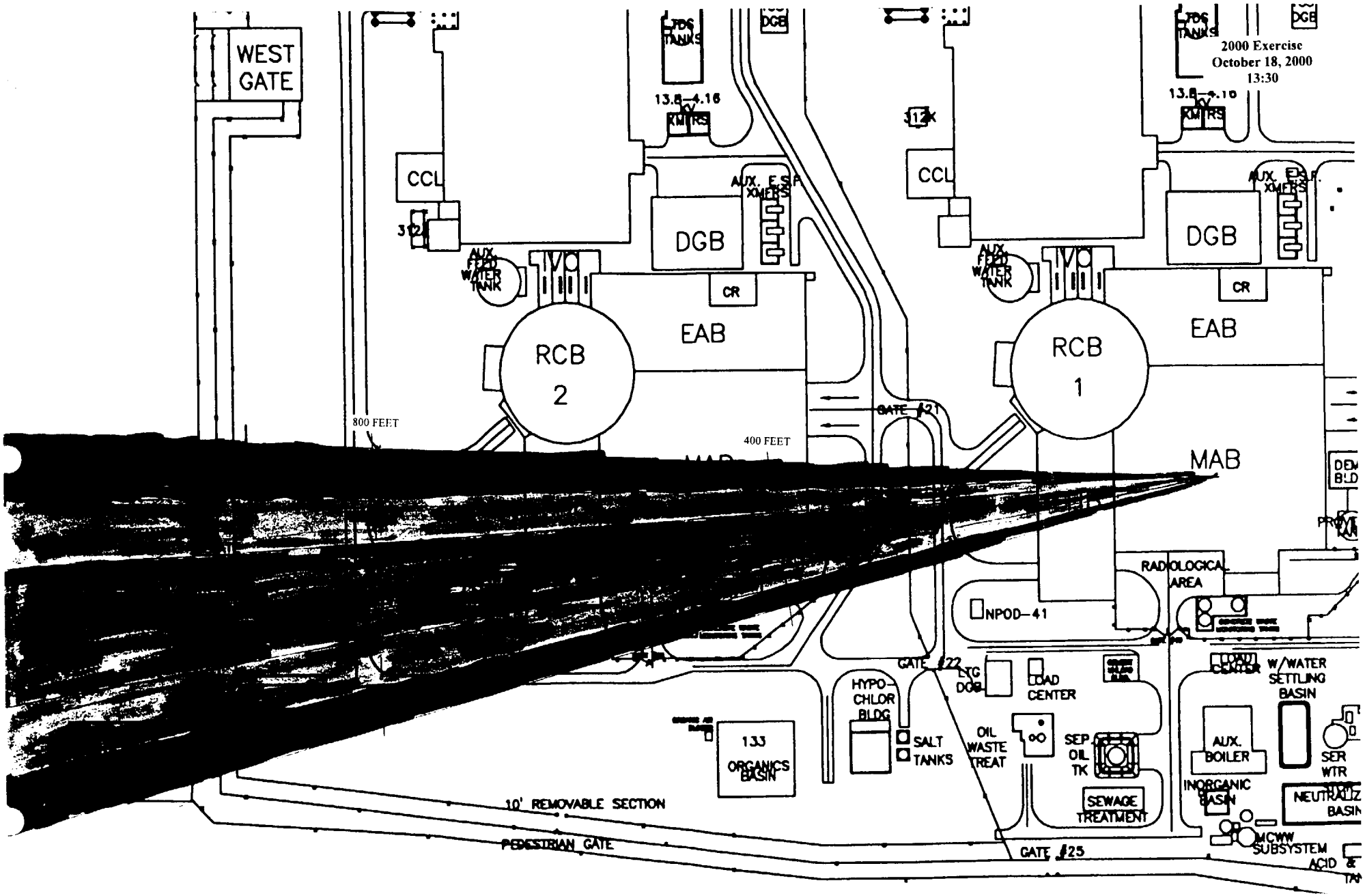
2000 Exercise
October 18, 2000
13:30
WEST GATE
CCL
DGB
EAB
CR
RCB 2
RCB 1
AUX. FEED WATER TANK
AUX. E.S.F. XMERS
13.8-4.16 KV
RMTRS
FDS TANKS
800 FEET
400 FEET
GATE #21
GATE #22
GATE #25
MAB
RADIOLOGICAL AREA
NPOD-41
LTG DGB
LOAD CENTER
W/WATER SETTLING BASIN
HYPO-CHLOR BLDG
SALT TANKS
OIL WASTE TREAT
SEP OIL TK
SEWAGE TREATMENT
AUX. BOILER
INORGANIC BASIN
NEUTRALIZ BASIN
SER WTR
MCWW SUBSYSTEM
133 ORGANICS BASIN
10' REMOVABLE SECTION
PEDESTRIAN GATE

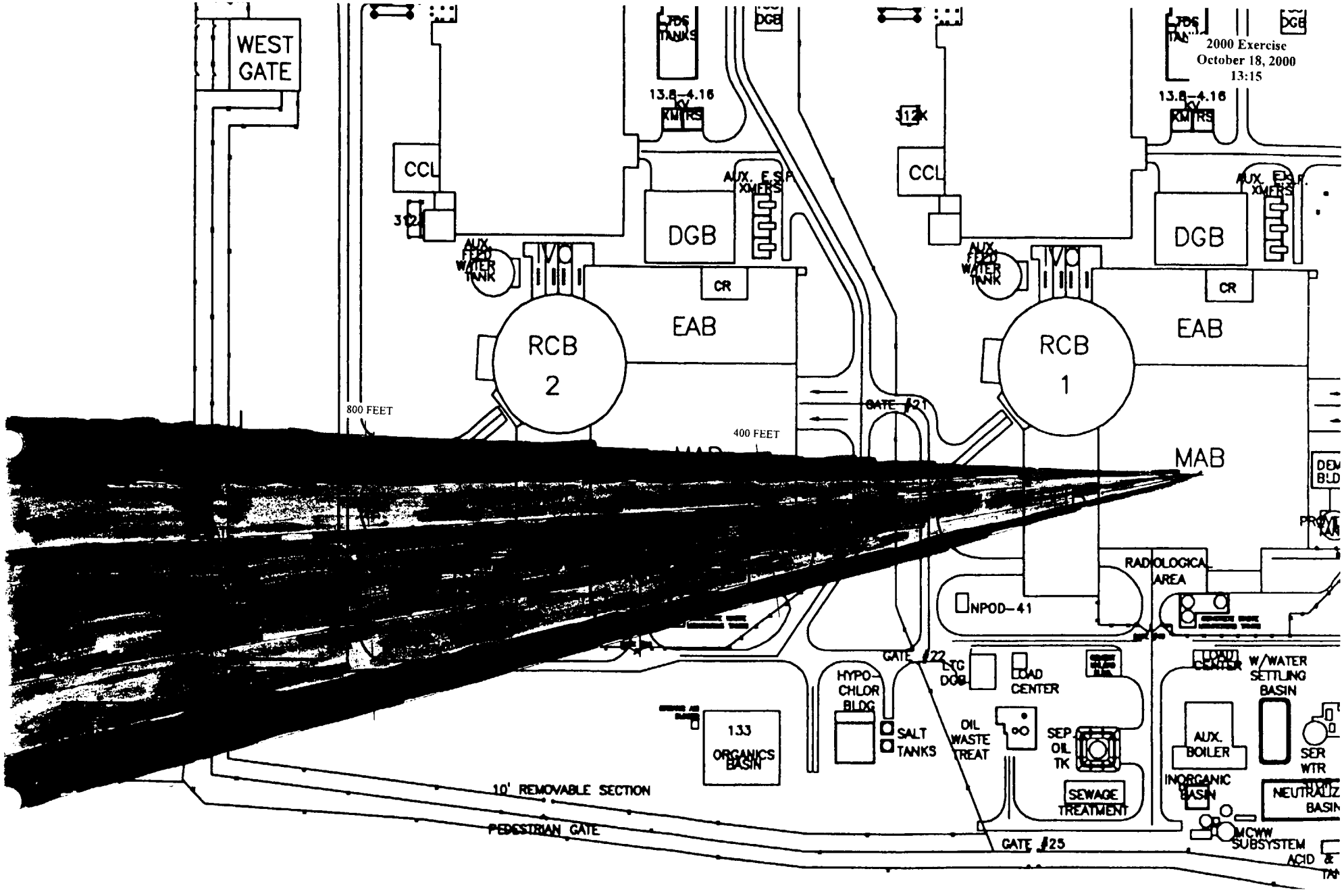
2000 Exercise
October 18, 2000
13:15
WEST GATE
CCL
DGB
CR
EAB
RCB 2
RCB 1
AUX. FEED WATER TANK
AUX. E.S.P. XMERS
13.8-4.16 KV XMERS
800 FEET
400 FEET
MAB
GATE #21
GATE #22
GATE #25
RADIOLOGICAL AREA
NPOD-41
LTG DOB
LOAD CENTER
HYPO-CHLOR BLDG
SALT TANKS
OIL WASTE TREAT
SEP OIL TK
SEWAGE TREATMENT
133 ORGANICS BASIN
W/WATER SETTLING BASIN
AUX. BOILER
INORGANIC BASIN
NEUTRALIZ BASIN
MCWW SUBSYSTEM
10' REMOVABLE SECTION
PEDESTRIAN GATE

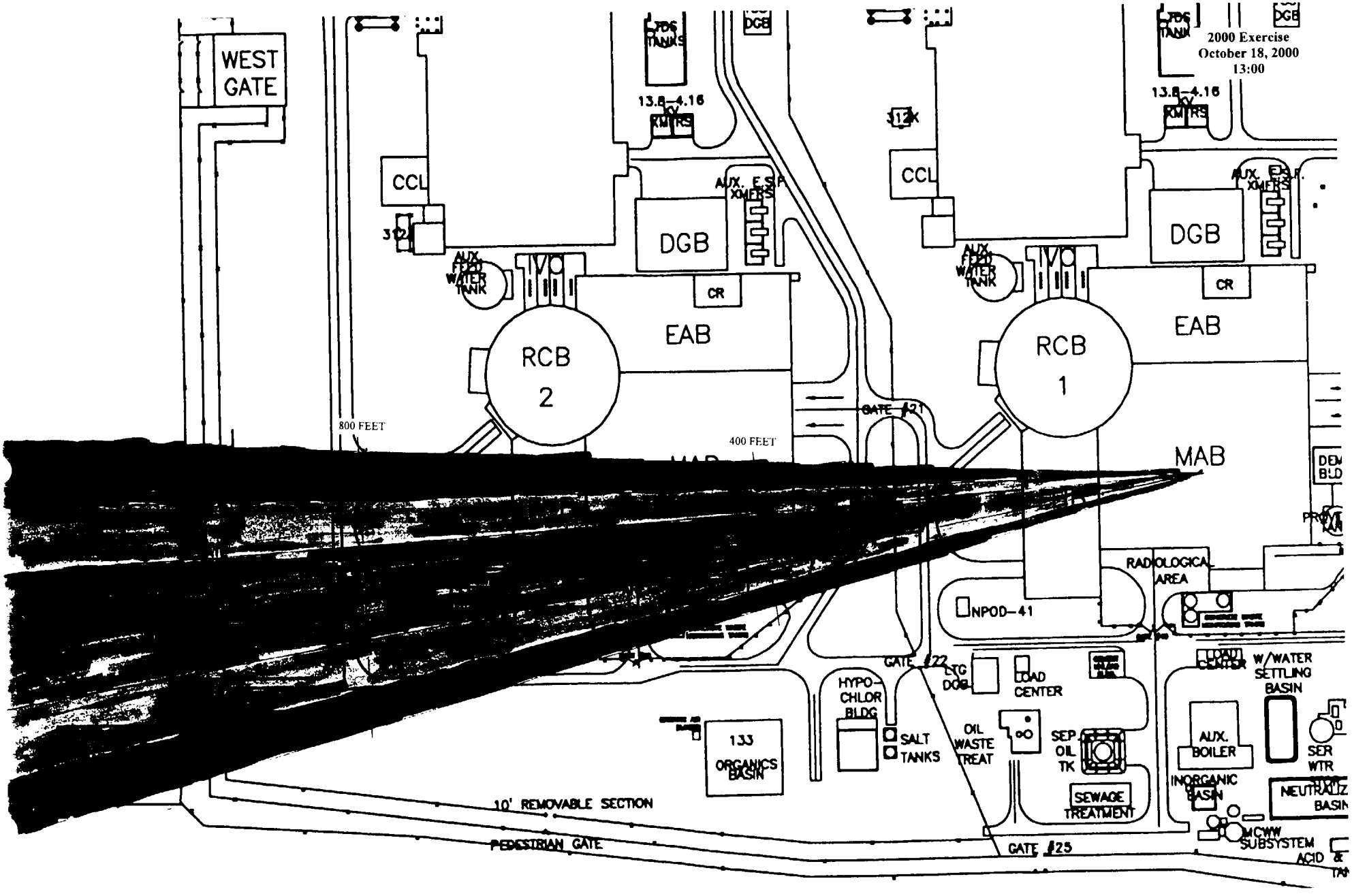
2000 Exercise
October 18, 2000
13:00
WEST GATE
CCL
DGB
EAB
RCB 2
RCB 1
CR
AUX. FDW WATER TANK
AUX. E.S.F. XMERS
13.8-4.16 KV RMTRS
GATE #21
GATE #22
GATE #25
800 FEET
400 FEET
MAB
RADIOLOGICAL AREA
NPOD-41
LOAD CENTER
W/WATER SETTLING BASIN
HYPO-CHLOR BLDG
SALT TANKS
OIL WASTE TREAT
SEP OIL TK
SEWAGE TREATMENT
133 ORGANICS BASIN
AUX. BOILER
INORGANIC BASIN
NEUTRALIZ BASIN
MCWW SUBSYSTEM
10' REMOVABLE SECTION
PEDESTRIAN GATE

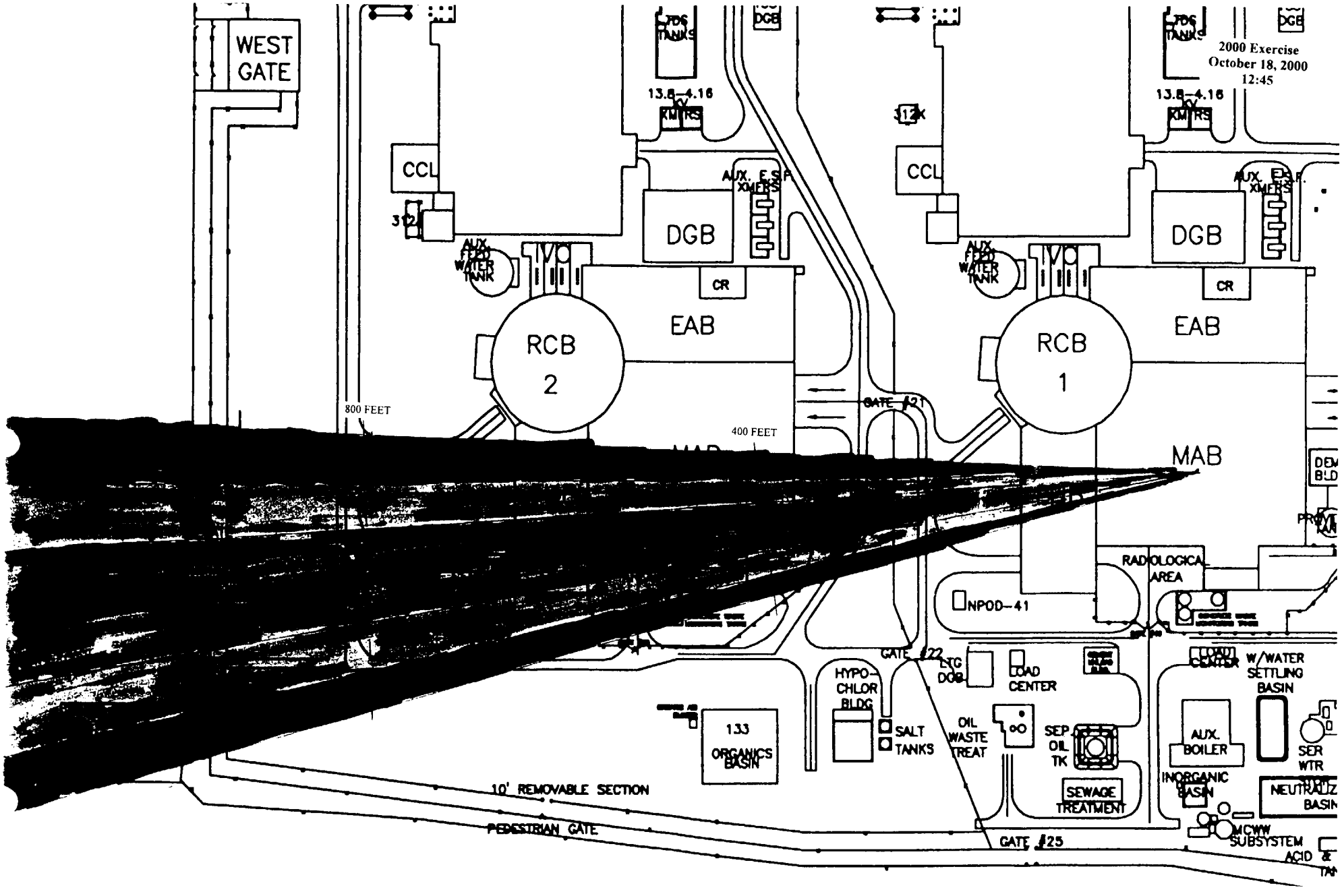
2000 Exercise
October 18, 2000
12:45
WEST GATE
CCL
312
AUX. FEED WATER TANK
RCB 2
DGB
CR
EAB
AUX. E.S.F. XMERS
13.8–4.16 KV
XMERS
FDS TANKS
DGB
312X
CCL
AUX. FEED WATER TANK
RCB 1
DGB
CR
EAB
AUX. E.S.F. XMERS
13.8–4.16 KV
XMERS
FDS TANKS
DGB
800 FEET
400 FEET
GATE #21
MAB
RADIOLOGICAL AREA
NPOD-41
GATE #22
LTG DOB
LOAD CENTER
LOAD CENTER
W/WATER SETTLING BASIN
HYPO-CHLOR BLDG
SALT TANKS
OIL WASTE TREAT
SEP OIL TK
SEWAGE TREATMENT
133 ORGANICS BASIN
AUX. BOILER
INORGANIC BASIN
SER WTR
NEUTRALIZ BASIN
MCWW SUBSYSTEM
ACID
10' REMOVABLE SECTION
PEDESTRIAN GATE
GATE #25

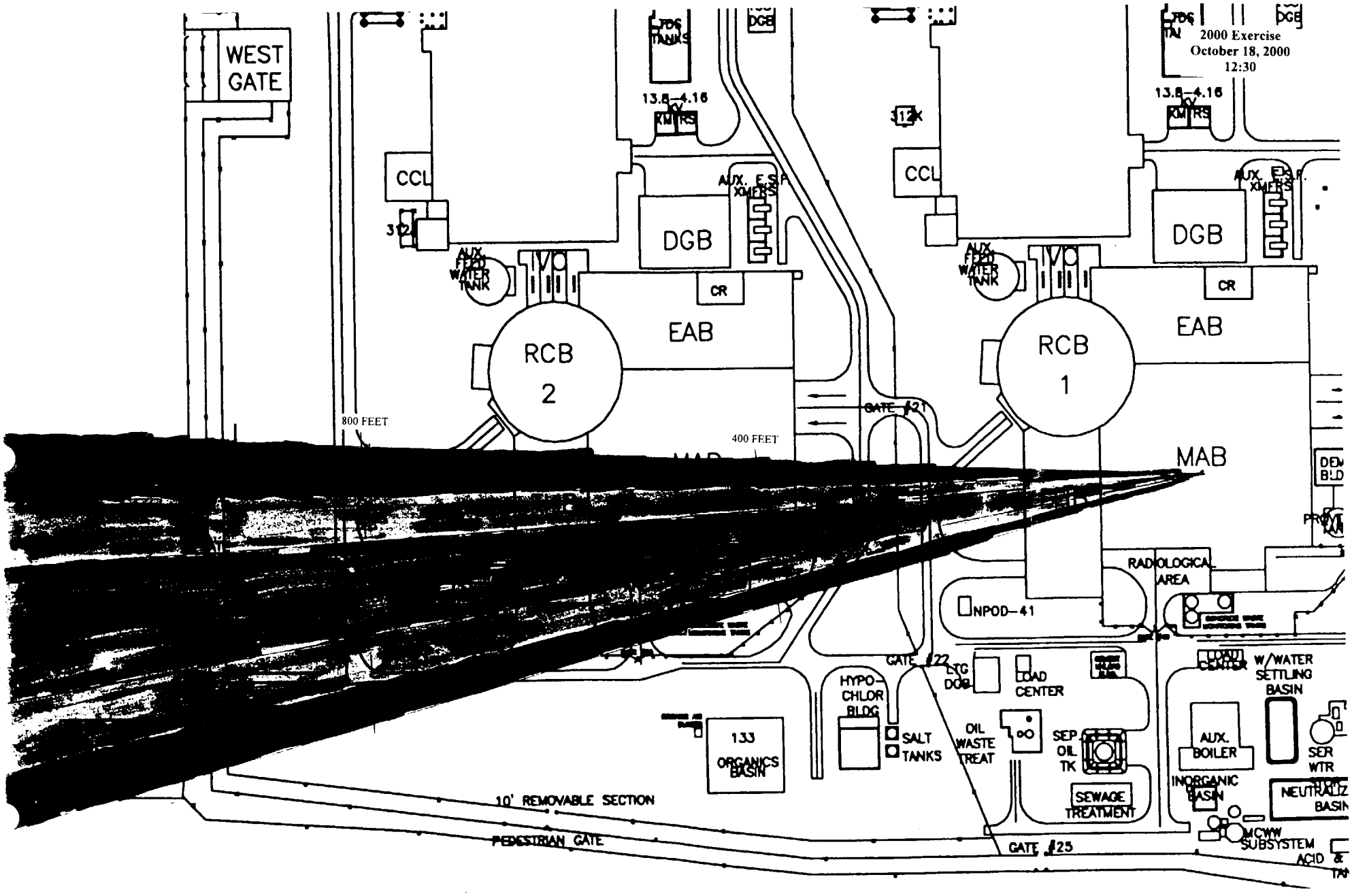
2000 Exercise
October 18, 2000
12:30
WEST GATE
CCL
DGB
EAB
CR
RCB 2
RCB 1
MAB
800 FEET
400 FEET
GATE #21
GATE #22
GATE #25
13.8-4.16 KV
XMFRS
AUX. FEED WATER TANK
LTDS TANKS
NPOD-41
RADIOLOGICAL AREA
LTG DGB
LOAD CENTER
HYPO-CHLOR BLDG
SALT TANKS
OIL WASTE TREAT
SEP OIL TK
SEWAGE TREATMENT
133 ORGANICS BASIN
W/WATER SETTLING BASIN
AUX. BOILER
INORGANIC BASIN
NEUTRALIZ BASIN
MCWW SUBSYSTEM
SER WTR
10' REMOVABLE SECTION
PEDESTRIAN GATE

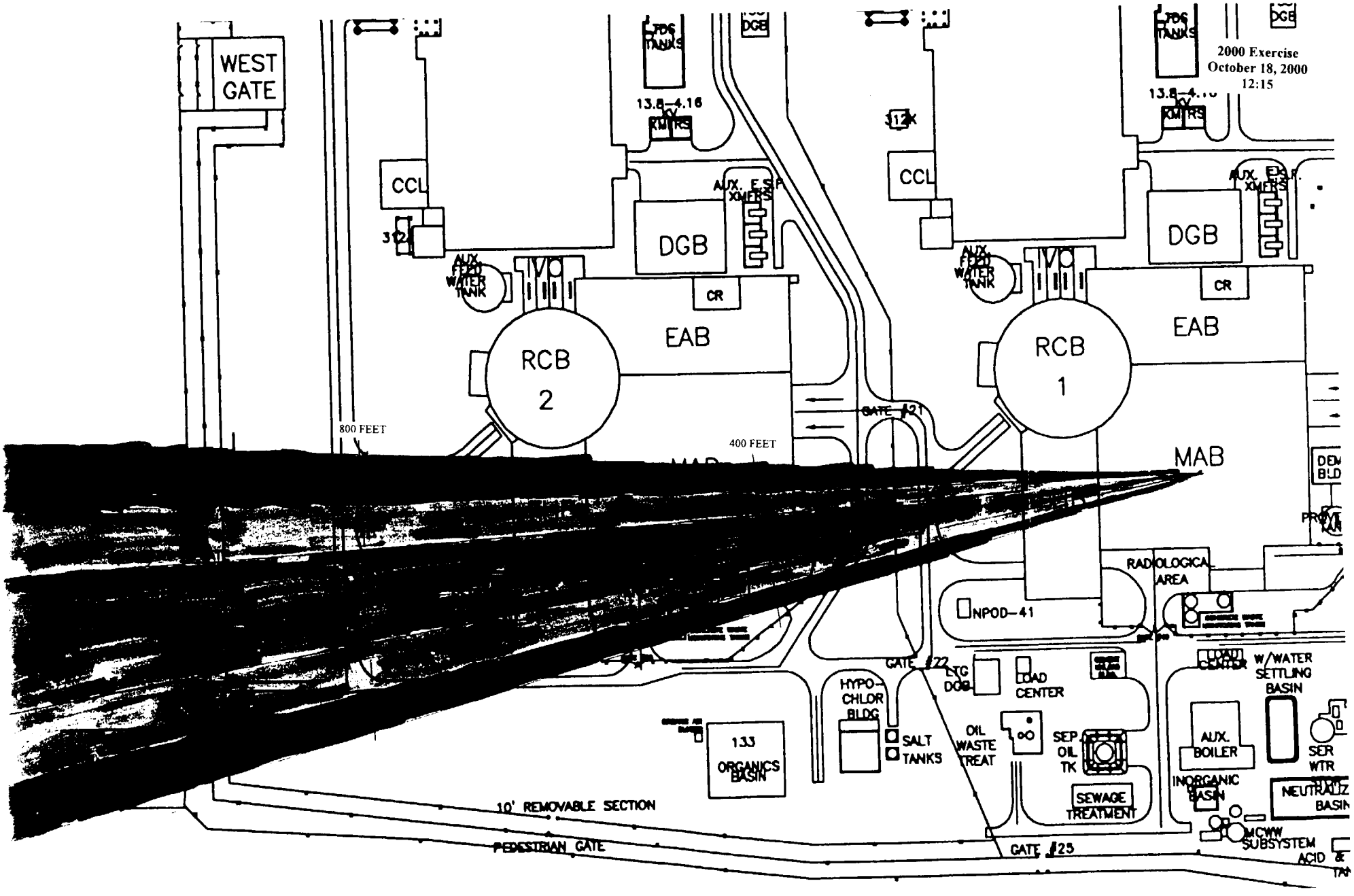
2000 Exercise
October 18, 2000
12:15
WEST GATE
CCL
DGB
EAB
RCB 2
RCB 1
CR
AUX. FEED WATER TANK
AUX. E.S.F. XMFRS
13.8-4.16 KV
TDS TANKS
800 FEET
400 FEET
MAB
GATE #21
GATE #22
GATE #25
RADIOLOGICAL AREA
NPOD-41
LTG DGB
LOAD CENTER
W/WATER SETTLING BASIN
HYPO-CHLOR BLDG
SALT TANKS
OIL WASTE TREAT
SEP OIL TK
SEWAGE TREATMENT
AUX. BOILER
INORGANIC BASIN
NEUTRALIZ BASIN
MCWW SUBSYSTEM
133 ORGANICS BASIN
10' REMOVABLE SECTION
PEDESTRIAN GATE

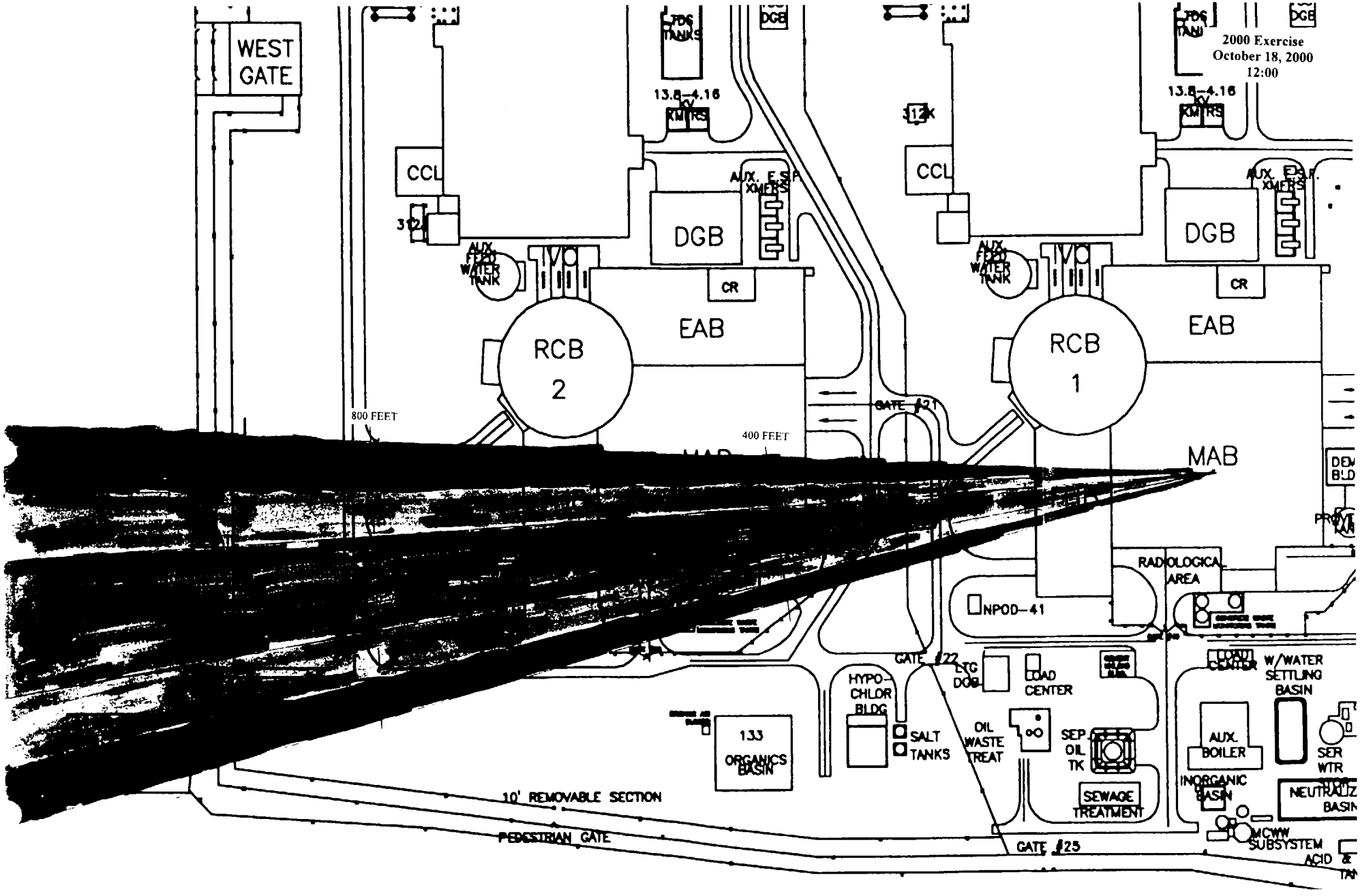
2000 Exercise
October 18, 2000
12:00
WEST GATE
CCL
312
AUX. FEED WATER TANK
RCB 2
EAB
CR
DGB
AUX. E.S.F. XMERS
13.8–4.16 KV XMERS
TDS TANKS
DGB
312
CCL
AUX. FEED WATER TANK
RCB 1
EAB
CR
DGB
AUX. E.S.F. XMERS
13.8–4.16 KV XMERS
TDS TANKS
DGB
800 FEET
400 FEET
GATE #21
MAB
RADIOLOGICAL AREA
NPOD–41
GATE #22
LTG DOG
LOAD CENTER
HYPO-CHLOR BLDG
SALT TANKS
OIL WASTE TREAT
SEP OIL TK
SEWAGE TREATMENT
133 ORGANICS BASIN
W/WATER SETTLING BASIN
AUX. BOILER
INORGANIC BASIN
MCWW SUBSYSTEM
SER WTR
NEUTRALIZ BASIN
ACID
10' REMOVABLE SECTION
PEDESTRIAN GATE
GATE #25

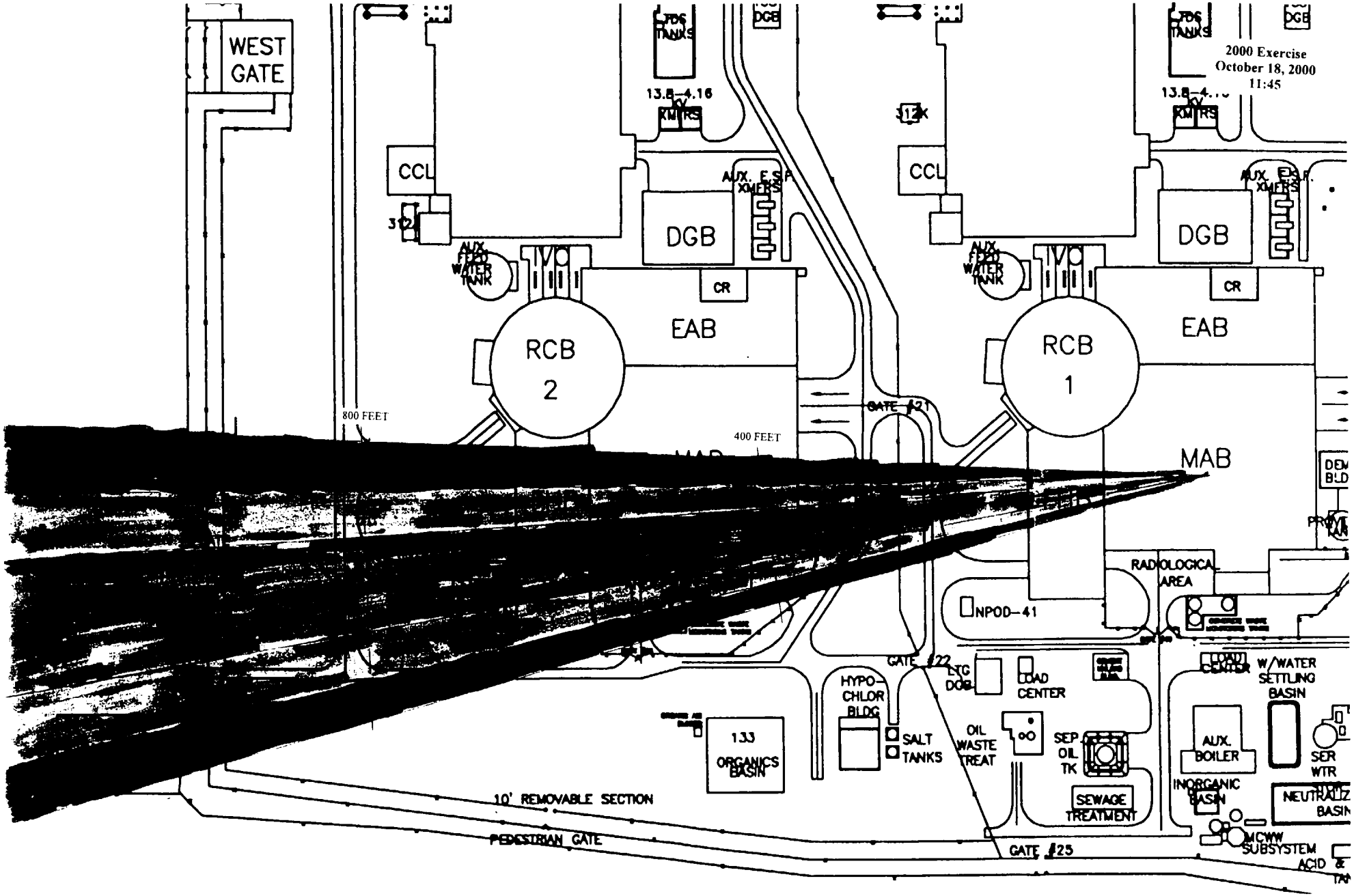
2000 Exercise
October 18, 2000
11:45
WEST GATE
CCL
DGB
CR
EAB
RCB 2
RCB 1
MAB
800 FEET
400 FEET
GATE #21
GATE #22
GATE #25
13.8-4.16 KV
XMFRS
AUX. FEED WATER TANK
LTDS TANKS
RADIOLOGICAL AREA
NPOD-41
LTG DOG
LOAD CENTER
HYPO-CHLOR BLDG
SALT TANKS
OIL WASTE TREAT
SEP OIL TK
SEWAGE TREATMENT
133 ORGANICS BASIN
W/WATER SETTLING BASIN
AUX. BOILER
INORGANIC BASIN
NEUTRALIZ BASIN
MCWW SUBSYSTEM
10' REMOVABLE SECTION
PEDESTRIAN GATE

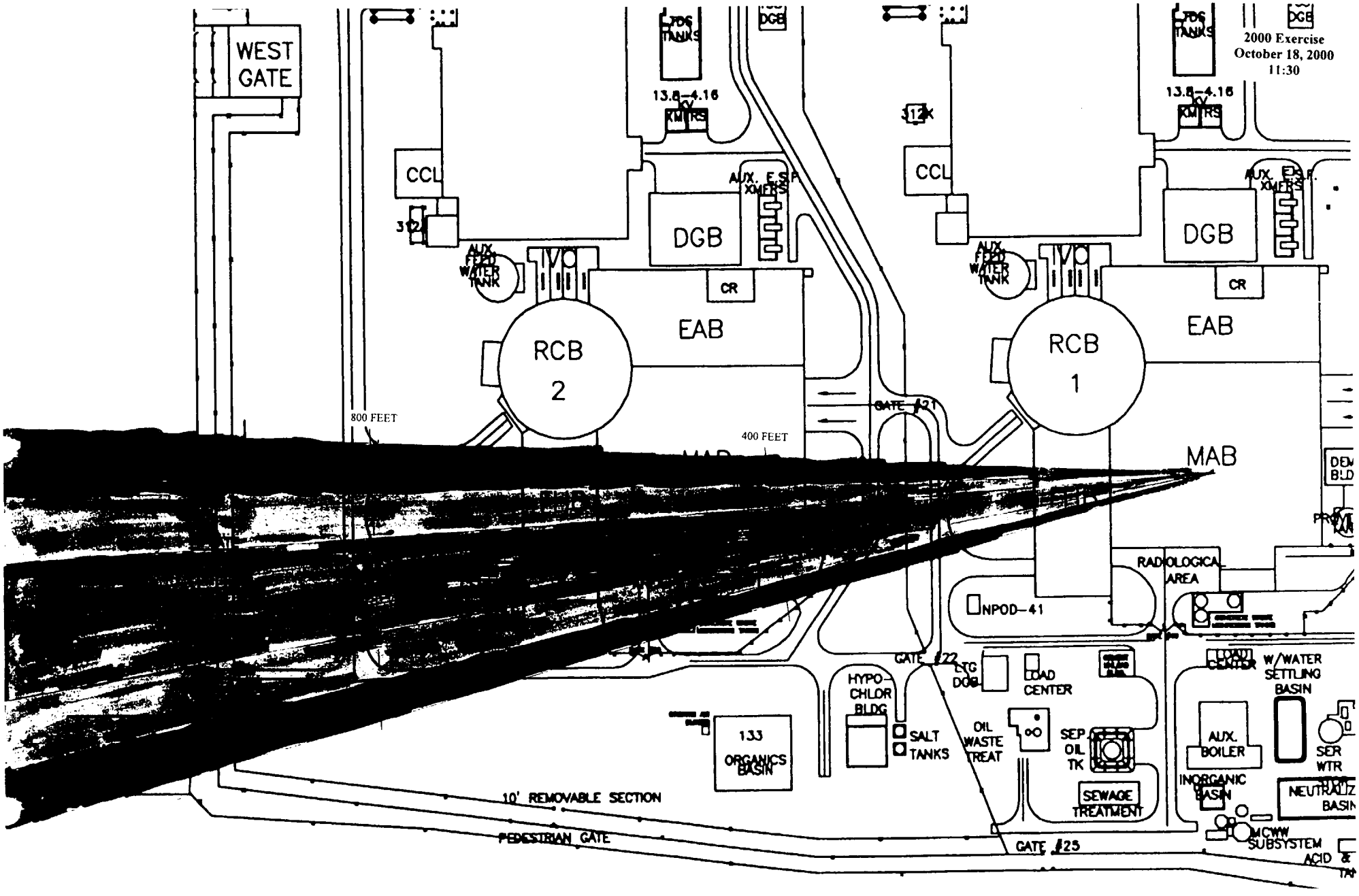
2000 Exercise
October 18, 2000
11:30
WEST GATE
CCL
DGB
EAB
CR
RCB 2
RCB 1
MAB
AUX. FEED WATER TANK
AUX. E.S.F. XMERS
13.8-4.16 KV
XMERS
800 FEET
400 FEET
GATE #21
GATE #22
GATE #23
NPOD-41
RADIOLOGICAL AREA
LTG DGB
LOAD CENTER
HYPO-CHLOR BLDG
SALT TANKS
OIL WASTE TREAT
SEP OIL TK
SEWAGE TREATMENT
133 ORGANICS BASIN
W/WATER SETTLING BASIN
AUX. BOILER
INORGANIC BASIN
MCWW SUBSYSTEM
SER WTR
10' REMOVABLE SECTION
PEDESTRIAN GATE

SCENARIO INFORMATION:

Simulated Time: 11:00
Interval Since Release Started (mins): 0:00

RELEASE IS FROM

Meteorological Inputs:

The ground level wind velocity: 7.0 mph
The ground level direction is from: 70.0 deg
Stability Class: C - Slightly Unstable

CALCULATED DOSES (mrem):

Distance (meters)	(miles)	Whole Body 5 cm Depth	Infant Thyroid
804.5	0.5	0.00E+00	0.00E+00
1609	1	0.00E+00	0.00E+00
3218	2	0.00E+00	0.00E+00
8045	5	0.00E+00	0.00E+00
12067.5	7.5	0.00E+00	0.00E+00
16090	10	0.00E+00	0.00E+00

Off Axes DEPOSITION (uCi/m2)
(miles)

mile	center line	0.1	0.2	0.3	0.4	0.5	0.6	0.7	0.8	0.9
0.5	0.00E+00	0.00E+00	0.00E+00	0.00E+00	0.00E+00	0.00E+00	0.00E+00	0.00E+00	0.00E+00	0.00E+00
1	0.00E+00	0.00E+00	0.00E+00	0.00E+00	0.00E+00	0.00E+00	0.00E+00	0.00E+00	0.00E+00	0.00E+00
2	0.00E+00	0.00E+00	0.00E+00	0.00E+00	0.00E+00	0.00E+00	0.00E+00	0.00E+00	0.00E+00	0.00E+00
5	0.00E+00	0.00E+00	0.00E+00	0.00E+00	0.00E+00	0.00E+00	0.00E+00	0.00E+00	0.00E+00	0.00E+00
7.5	0.00E+00	0.00E+00	0.00E+00	0.00E+00	0.00E+00	0.00E+00	0.00E+00	0.00E+00	0.00E+00	0.00E+00
10	0.00E+00	0.00E+00	0.00E+00	0.00E+00	0.00E+00	0.00E+00	0.00E+00	0.00E+00	0.00E+00	0.00E+00

Off Axes Six Inch Dose Rate (mR/hr)
(miles)

mile	center line	0.1	0.2	0.3	0.4	0.5	0.6	0.7	0.8	0.9
0.5	0.00E+00	0.00E+00	0.00E+00	0.00E+00	0.00E+00	0.00E+00	0.00E+00	0.00E+00	0.00E+00	0.00E+00
1	0.00E+00	0.00E+00	0.00E+00	0.00E+00	0.00E+00	0.00E+00	0.00E+00	0.00E+00	0.00E+00	0.00E+00
2	0.00E+00	0.00E+00	0.00E+00	0.00E+00	0.00E+00	0.00E+00	0.00E+00	0.00E+00	0.00E+00	0.00E+00
5	0.00E+00	0.00E+00	0.00E+00	0.00E+00	0.00E+00	0.00E+00	0.00E+00	0.00E+00	0.00E+00	0.00E+00
7.5	0.00E+00	0.00E+00	0.00E+00	0.00E+00	0.00E+00	0.00E+00	0.00E+00	0.00E+00	0.00E+00	0.00E+00
10	0.00E+00	0.00E+00	0.00E+00	0.00E+00	0.00E+00	0.00E+00	0.00E+00	0.00E+00	0.00E+00	0.00E+00

Off Axes WHOLE BODY Dose Rate (mrem/hr)
(miles)

mile	center line	0.1	0.2	0.3	0.4	0.5	0.6	0.7	0.8	0.9
0.5	0.00E+00	0.00E+00	0.00E+00	0.00E+00	0.00E+00	0.00E+00	0.00E+00	0.00E+00	0.00E+00	0.00E+00
1	0.00E+00	0.00E+00	0.00E+00	0.00E+00	0.00E+00	0.00E+00	0.00E+00	0.00E+00	0.00E+00	0.00E+00
2	0.00E+00	0.00E+00	0.00E+00	0.00E+00	0.00E+00	0.00E+00	0.00E+00	0.00E+00	0.00E+00	0.00E+00
5	0.00E+00	0.00E+00	0.00E+00	0.00E+00	0.00E+00	0.00E+00	0.00E+00	0.00E+00	0.00E+00	0.00E+00
7.5	0.00E+00	0.00E+00	0.00E+00	0.00E+00	0.00E+00	0.00E+00	0.00E+00	0.00E+00	0.00E+00	0.00E+00
10	0.00E+00	0.00E+00	0.00E+00	0.00E+00	0.00E+00	0.00E+00	0.00E+00	0.00E+00	0.00E+00	0.00E+00

Off Axes THYROID Dose Rate (mrem/hr)
(miles)

mile	center line	0.1	0.2	0.3	0.4	0.5	0.6	0.7	0.8	0.9
0.5	0.00E+00	0.00E+00	0.00E+00	0.00E+00	0.00E+00	0.00E+00	0.00E+00	0.00E+00	0.00E+00	0.00E+00
1	0.00E+00	0.00E+00	0.00E+00	0.00E+00	0.00E+00	0.00E+00	0.00E+00	0.00E+00	0.00E+00	0.00E+00
2	0.00E+00	0.00E+00	0.00E+00	0.00E+00	0.00E+00	0.00E+00	0.00E+00	0.00E+00	0.00E+00	0.00E+00
5	0.00E+00	0.00E+00	0.00E+00	0.00E+00	0.00E+00	0.00E+00	0.00E+00	0.00E+00	0.00E+00	0.00E+00
7.5	0.00E+00	0.00E+00	0.00E+00	0.00E+00	0.00E+00	0.00E+00	0.00E+00	0.00E+00	0.00E+00	0.00E+00
10	0.00E+00	0.00E+00	0.00E+00	0.00E+00	0.00E+00	0.00E+00	0.00E+00	0.00E+00	0.00E+00	0.00E+00

Off Axes NOBLE GAS Concentration (uCi/cc)
(miles)

mile	center line	0.1	0.2	0.3	0.4	0.5	0.6	0.7	0.8	0.9
0.5	0.00E+00	0.00E+00	0.00E+00	0.00E+00	0.00E+00	0.00E+00	0.00E+00	0.00E+00	0.00E+00	0.00E+00
1	0.00E+00	0.00E+00	0.00E+00	0.00E+00	0.00E+00	0.00E+00	0.00E+00	0.00E+00	0.00E+00	0.00E+00
2	0.00E+00	0.00E+00	0.00E+00	0.00E+00	0.00E+00	0.00E+00	0.00E+00	0.00E+00	0.00E+00	0.00E+00
5	0.00E+00	0.00E+00	0.00E+00	0.00E+00	0.00E+00	0.00E+00	0.00E+00	0.00E+00	0.00E+00	0.00E+00
7.5	0.00E+00	0.00E+00	0.00E+00	0.00E+00	0.00E+00	0.00E+00	0.00E+00	0.00E+00	0.00E+00	0.00E+00
10	0.00E+00	0.00E+00	0.00E+00	0.00E+00	0.00E+00	0.00E+00	0.00E+00	0.00E+00	0.00E+00	0.00E+00

Off Axes PARTICULATE Concentration (uCi/cc)
(miles)

mile	center line	0.1	0.2	0.3	0.4	0.5	0.6	0.7	0.8	0.9
0.5	0.00E+00	0.00E+00	0.00E+00	0.00E+00	0.00E+00	0.00E+00	0.00E+00	0.00E+00	0.00E+00	0.00E+00
1	0.00E+00	0.00E+00	0.00E+00	0.00E+00	0.00E+00	0.00E+00	0.00E+00	0.00E+00	0.00E+00	0.00E+00
2	0.00E+00	0.00E+00	0.00E+00	0.00E+00	0.00E+00	0.00E+00	0.00E+00	0.00E+00	0.00E+00	0.00E+00
5	0.00E+00	0.00E+00	0.00E+00	0.00E+00	0.00E+00	0.00E+00	0.00E+00	0.00E+00	0.00E+00	0.00E+00
7.5	0.00E+00	0.00E+00	0.00E+00	0.00E+00	0.00E+00	0.00E+00	0.00E+00	0.00E+00	0.00E+00	0.00E+00
10	0.00E+00	0.00E+00	0.00E+00	0.00E+00	0.00E+00	0.00E+00	0.00E+00	0.00E+00	0.00E+00	0.00E+00

Off Axes IODINE Concentration (uCi/cc)
(miles)

mile	center line	0.1	0.2	0.3	0.4	0.5	0.6	0.7	0.8	0.9
0.5	0.00E+00	0.00E+00	0.00E+00	0.00E+00	0.00E+00	0.00E+00	0.00E+00	0.00E+00	0.00E+00	0.00E+00
1	0.00E+00	0.00E+00	0.00E+00	0.00E+00	0.00E+00	0.00E+00	0.00E+00	0.00E+00	0.00E+00	0.00E+00
2	0.00E+00	0.00E+00	0.00E+00	0.00E+00	0.00E+00	0.00E+00	0.00E+00	0.00E+00	0.00E+00	0.00E+00
5	0.00E+00	0.00E+00	0.00E+00	0.00E+00	0.00E+00	0.00E+00	0.00E+00	0.00E+00	0.00E+00	0.00E+00
7.5	0.00E+00	0.00E+00	0.00E+00	0.00E+00	0.00E+00	0.00E+00	0.00E+00	0.00E+00	0.00E+00	0.00E+00
10	0.00E+00	0.00E+00	0.00E+00	0.00E+00	0.00E+00	0.00E+00	0.00E+00	0.00E+00	0.00E+00	0.00E+00

Off Axes Ground Deposition Measurements (cpm) for a Ludlum #44-40 Geiger Probe
(miles)

mile	center line	0.1	0.2	0.3	0.4	0.5	0.6	0.7	0.8	0.9
0.5	AS READ	AS READ	AS READ	AS READ	AS READ	AS READ	AS READ	AS READ	AS READ	AS READ
1	AS READ	AS READ	AS READ	AS READ	AS READ	AS READ	AS READ	AS READ	AS READ	AS READ
2	AS READ	AS READ	AS READ	AS READ	AS READ	AS READ	AS READ	AS READ	AS READ	AS READ
5	AS READ	AS READ	AS READ	AS READ	AS READ	AS READ	AS READ	AS READ	AS READ	AS READ
7.5	AS READ	AS READ	AS READ	AS READ	AS READ	AS READ	AS READ	AS READ	AS READ	AS READ
10	AS READ	AS READ	AS READ	AS READ	AS READ	AS READ	AS READ	AS READ	AS READ	AS READ

Simulated Time: 11:00

Offsite
Offsite Data

Off Axes Wipe Measurements (cpm) for a Ludlum #44-40 Geiger Probe
(miles)

mile	center line	0.1	0.2	0.3	0.4	0.5	0.6	0.7	0.8	0.9
0.5	AS READ	AS READ	AS READ	AS READ	AS READ	AS READ	AS READ	AS READ	AS READ	AS READ
1	AS READ	AS READ	AS READ	AS READ	AS READ	AS READ	AS READ	AS READ	AS READ	AS READ
2	AS READ	AS READ	AS READ	AS READ	AS READ	AS READ	AS READ	AS READ	AS READ	AS READ
5	AS READ	AS READ	AS READ	AS READ	AS READ	AS READ	AS READ	AS READ	AS READ	AS READ
7.5	AS READ	AS READ	AS READ	AS READ	AS READ	AS READ	AS READ	AS READ	AS READ	AS READ
10	AS READ	AS READ	AS READ	AS READ	AS READ	AS READ	AS READ	AS READ	AS READ	AS READ

Off Axes PARTICULATE Measurements (cpm) using a Ludlum #44-40 Probe for a 30 Cubic Foot Air Sample
(miles)

mile	center line	0.1	0.2	0.3	0.4	0.5	0.6	0.7	0.8	0.9
0.5	AS READ	AS READ	AS READ	AS READ	AS READ	AS READ	AS READ	AS READ	AS READ	AS READ
1	AS READ	AS READ	AS READ	AS READ	AS READ	AS READ	AS READ	AS READ	AS READ	AS READ
2	AS READ	AS READ	AS READ	AS READ	AS READ	AS READ	AS READ	AS READ	AS READ	AS READ
5	AS READ	AS READ	AS READ	AS READ	AS READ	AS READ	AS READ	AS READ	AS READ	AS READ
7.5	AS READ	AS READ	AS READ	AS READ	AS READ	AS READ	AS READ	AS READ	AS READ	AS READ
10	AS READ	AS READ	AS READ	AS READ	AS READ	AS READ	AS READ	AS READ	AS READ	AS READ

Off Axes IODINE Measurements (cpm) using a Ludlum #44-40 Probe for a 10 Cubic Foot Air Sample
(miles)

mile	center line	0.1	0.2	0.3	0.4	0.5	0.6	0.7	0.8	0.9
0.5	AS READ	AS READ	AS READ	AS READ	AS READ	AS READ	AS READ	AS READ	AS READ	AS READ
1	AS READ	AS READ	AS READ	AS READ	AS READ	AS READ	AS READ	AS READ	AS READ	AS READ
2	AS READ	AS READ	AS READ	AS READ	AS READ	AS READ	AS READ	AS READ	AS READ	AS READ
5	AS READ	AS READ	AS READ	AS READ	AS READ	AS READ	AS READ	AS READ	AS READ	AS READ
7.5	AS READ	AS READ	AS READ	AS READ	AS READ	AS READ	AS READ	AS READ	AS READ	AS READ
10	AS READ	AS READ	AS READ	AS READ	AS READ	AS READ	AS READ	AS READ	AS READ	AS READ

SCENARIO INFORMATION:

Simulated Time: 11:15
Interval Since Release Started (mins): 0:15

RELEASE IS FROM

Meteorological Inputs:

The ground level wind velocity: 7.0 mph
The ground level direction is from: 70.0 deg
Stability Class: C - Slightly Unstable

CALCULATED DOSES (mrem):

Distance (meters)	(miles)	Whole Body 5 cm Depth	Infant Thyroid
804.5	0.5	0.00E+00	0.00E+00
1609	1	0.00E+00	0.00E+00
3218	2	0.00E+00	0.00E+00
8045	5	0.00E+00	0.00E+00
12067.5	7.5	0.00E+00	0.00E+00
16090	10	0.00E+00	0.00E+00

Off Axes DEPOSITION (uCi/m2)
(miles)

mile	center line	0.1	0.2	0.3	0.4	0.5	0.6	0.7	0.8	0.9
0.5	0.00E+00	0.00E+00	0.00E+00	0.00E+00	0.00E+00	0.00E+00	0.00E+00	0.00E+00	0.00E+00	0.00E+00
1	0.00E+00	0.00E+00	0.00E+00	0.00E+00	0.00E+00	0.00E+00	0.00E+00	0.00E+00	0.00E+00	0.00E+00
2	0.00E+00	0.00E+00	0.00E+00	0.00E+00	0.00E+00	0.00E+00	0.00E+00	0.00E+00	0.00E+00	0.00E+00
5	0.00E+00	0.00E+00	0.00E+00	0.00E+00	0.00E+00	0.00E+00	0.00E+00	0.00E+00	0.00E+00	0.00E+00
7.5	0.00E+00	0.00E+00	0.00E+00	0.00E+00	0.00E+00	0.00E+00	0.00E+00	0.00E+00	0.00E+00	0.00E+00
10	0.00E+00	0.00E+00	0.00E+00	0.00E+00	0.00E+00	0.00E+00	0.00E+00	0.00E+00	0.00E+00	0.00E+00

Off Axes Six Inch Dose Rate (mR/hr)
(miles)

mile	center line	0.1	0.2	0.3	0.4	0.5	0.6	0.7	0.8	0.9
0.5	0.00E+00	0.00E+00	0.00E+00	0.00E+00	0.00E+00	0.00E+00	0.00E+00	0.00E+00	0.00E+00	0.00E+00
1	0.00E+00	0.00E+00	0.00E+00	0.00E+00	0.00E+00	0.00E+00	0.00E+00	0.00E+00	0.00E+00	0.00E+00
2	0.00E+00	0.00E+00	0.00E+00	0.00E+00	0.00E+00	0.00E+00	0.00E+00	0.00E+00	0.00E+00	0.00E+00
5	0.00E+00	0.00E+00	0.00E+00	0.00E+00	0.00E+00	0.00E+00	0.00E+00	0.00E+00	0.00E+00	0.00E+00
7.5	0.00E+00	0.00E+00	0.00E+00	0.00E+00	0.00E+00	0.00E+00	0.00E+00	0.00E+00	0.00E+00	0.00E+00
10	0.00E+00	0.00E+00	0.00E+00	0.00E+00	0.00E+00	0.00E+00	0.00E+00	0.00E+00	0.00E+00	0.00E+00

Off Axes WHOLE BODY Dose Rate (mrem/hr)
(miles)

mile	center line	0.1	0.2	0.3	0.4	0.5	0.6	0.7	0.8	0.9
0.5	0.00E+00	0.00E+00	0.00E+00	0.00E+00	0.00E+00	0.00E+00	0.00E+00	0.00E+00	0.00E+00	0.00E+00
1	0.00E+00	0.00E+00	0.00E+00	0.00E+00	0.00E+00	0.00E+00	0.00E+00	0.00E+00	0.00E+00	0.00E+00
2	0.00E+00	0.00E+00	0.00E+00	0.00E+00	0.00E+00	0.00E+00	0.00E+00	0.00E+00	0.00E+00	0.00E+00
5	0.00E+00	0.00E+00	0.00E+00	0.00E+00	0.00E+00	0.00E+00	0.00E+00	0.00E+00	0.00E+00	0.00E+00
7.5	0.00E+00	0.00E+00	0.00E+00	0.00E+00	0.00E+00	0.00E+00	0.00E+00	0.00E+00	0.00E+00	0.00E+00
10	0.00E+00	0.00E+00	0.00E+00	0.00E+00	0.00E+00	0.00E+00	0.00E+00	0.00E+00	0.00E+00	0.00E+00

Off Axes THYROID Dose Rate (mrem/hr)
(miles)

mile	center line	0.1	0.2	0.3	0.4	0.5	0.6	0.7	0.8	0.9
0.5	0.00E+00	0.00E+00	0.00E+00	0.00E+00	0.00E+00	0.00E+00	0.00E+00	0.00E+00	0.00E+00	0.00E+00
1	0.00E+00	0.00E+00	0.00E+00	0.00E+00	0.00E+00	0.00E+00	0.00E+00	0.00E+00	0.00E+00	0.00E+00
2	0.00E+00	0.00E+00	0.00E+00	0.00E+00	0.00E+00	0.00E+00	0.00E+00	0.00E+00	0.00E+00	0.00E+00
5	0.00E+00	0.00E+00	0.00E+00	0.00E+00	0.00E+00	0.00E+00	0.00E+00	0.00E+00	0.00E+00	0.00E+00
7.5	0.00E+00	0.00E+00	0.00E+00	0.00E+00	0.00E+00	0.00E+00	0.00E+00	0.00E+00	0.00E+00	0.00E+00
10	0.00E+00	0.00E+00	0.00E+00	0.00E+00	0.00E+00	0.00E+00	0.00E+00	0.00E+00	0.00E+00	0.00E+00

Off Axes NOBLE GAS Concentration (uCi/cc)
(miles)

mile	center line	0.1	0.2	0.3	0.4	0.5	0.6	0.7	0.8	0.9
0.5	0.00E+00	0.00E+00	0.00E+00	0.00E+00	0.00E+00	0.00E+00	0.00E+00	0.00E+00	0.00E+00	0.00E+00
1	0.00E+00	0.00E+00	0.00E+00	0.00E+00	0.00E+00	0.00E+00	0.00E+00	0.00E+00	0.00E+00	0.00E+00
2	0.00E+00	0.00E+00	0.00E+00	0.00E+00	0.00E+00	0.00E+00	0.00E+00	0.00E+00	0.00E+00	0.00E+00
5	0.00E+00	0.00E+00	0.00E+00	0.00E+00	0.00E+00	0.00E+00	0.00E+00	0.00E+00	0.00E+00	0.00E+00
7.5	0.00E+00	0.00E+00	0.00E+00	0.00E+00	0.00E+00	0.00E+00	0.00E+00	0.00E+00	0.00E+00	0.00E+00
10	0.00E+00	0.00E+00	0.00E+00	0.00E+00	0.00E+00	0.00E+00	0.00E+00	0.00E+00	0.00E+00	0.00E+00

Off Axes PARTICULATE Concentration (uCi/cc)
(miles)

mile	center line	0.1	0.2	0.3	0.4	0.5	0.6	0.7	0.8	0.9
0.5	0.00E+00	0.00E+00	0.00E+00	0.00E+00	0.00E+00	0.00E+00	0.00E+00	0.00E+00	0.00E+00	0.00E+00
1	0.00E+00	0.00E+00	0.00E+00	0.00E+00	0.00E+00	0.00E+00	0.00E+00	0.00E+00	0.00E+00	0.00E+00
2	0.00E+00	0.00E+00	0.00E+00	0.00E+00	0.00E+00	0.00E+00	0.00E+00	0.00E+00	0.00E+00	0.00E+00
5	0.00E+00	0.00E+00	0.00E+00	0.00E+00	0.00E+00	0.00E+00	0.00E+00	0.00E+00	0.00E+00	0.00E+00
7.5	0.00E+00	0.00E+00	0.00E+00	0.00E+00	0.00E+00	0.00E+00	0.00E+00	0.00E+00	0.00E+00	0.00E+00
10	0.00E+00	0.00E+00	0.00E+00	0.00E+00	0.00E+00	0.00E+00	0.00E+00	0.00E+00	0.00E+00	0.00E+00

Off Axes IODINE Concentration (uCi/cc)
(miles)

mile	center line	0.1	0.2	0.3	0.4	0.5	0.6	0.7	0.8	0.9
0.5	0.00E+00	0.00E+00	0.00E+00	0.00E+00	0.00E+00	0.00E+00	0.00E+00	0.00E+00	0.00E+00	0.00E+00
1	0.00E+00	0.00E+00	0.00E+00	0.00E+00	0.00E+00	0.00E+00	0.00E+00	0.00E+00	0.00E+00	0.00E+00
2	0.00E+00	0.00E+00	0.00E+00	0.00E+00	0.00E+00	0.00E+00	0.00E+00	0.00E+00	0.00E+00	0.00E+00
5	0.00E+00	0.00E+00	0.00E+00	0.00E+00	0.00E+00	0.00E+00	0.00E+00	0.00E+00	0.00E+00	0.00E+00
7.5	0.00E+00	0.00E+00	0.00E+00	0.00E+00	0.00E+00	0.00E+00	0.00E+00	0.00E+00	0.00E+00	0.00E+00
10	0.00E+00	0.00E+00	0.00E+00	0.00E+00	0.00E+00	0.00E+00	0.00E+00	0.00E+00	0.00E+00	0.00E+00

Off Axes Ground Deposition Measurements (cpm) for a Ludlum #44-40 Geiger Probe
(miles)

mile	center line	0.1	0.2	0.3	0.4	0.5	0.6	0.7	0.8	0.9
0.5	AS READ	AS READ	AS READ	AS READ	AS READ	AS READ	AS READ	AS READ	AS READ	AS READ
1	AS READ	AS READ	AS READ	AS READ	AS READ	AS READ	AS READ	AS READ	AS READ	AS READ
2	AS READ	AS READ	AS READ	AS READ	AS READ	AS READ	AS READ	AS READ	AS READ	AS READ
5	AS READ	AS READ	AS READ	AS READ	AS READ	AS READ	AS READ	AS READ	AS READ	AS READ
7.5	AS READ	AS READ	AS READ	AS READ	AS READ	AS READ	AS READ	AS READ	AS READ	AS READ
10	AS READ	AS READ	AS READ	AS READ	AS READ	AS READ	AS READ	AS READ	AS READ	AS READ

Off Axes Wipe Measurements (cpm) for a Ludlum #44-40 Geiger Probe
(miles)

mile	center line	0.1	0.2	0.3	0.4	0.5	0.6	0.7	0.8	0.9
0.5	AS READ	AS READ	AS READ	AS READ	AS READ	AS READ	AS READ	AS READ	AS READ	AS READ
1	AS READ	AS READ	AS READ	AS READ	AS READ	AS READ	AS READ	AS READ	AS READ	AS READ
2	AS READ	AS READ	AS READ	AS READ	AS READ	AS READ	AS READ	AS READ	AS READ	AS READ
5	AS READ	AS READ	AS READ	AS READ	AS READ	AS READ	AS READ	AS READ	AS READ	AS READ
7.5	AS READ	AS READ	AS READ	AS READ	AS READ	AS READ	AS READ	AS READ	AS READ	AS READ
10	AS READ	AS READ	AS READ	AS READ	AS READ	AS READ	AS READ	AS READ	AS READ	AS READ

Off Axes PARTICULATE Measurements (cpm) using a Ludlum #44-40 Probe for a 30 Cubic Foot Air Sample
(miles)

mile	center line	0.1	0.2	0.3	0.4	0.5	0.6	0.7	0.8	0.9
0.5	AS READ	AS READ	AS READ	AS READ	AS READ	AS READ	AS READ	AS READ	AS READ	AS READ
1	AS READ	AS READ	AS READ	AS READ	AS READ	AS READ	AS READ	AS READ	AS READ	AS READ
2	AS READ	AS READ	AS READ	AS READ	AS READ	AS READ	AS READ	AS READ	AS READ	AS READ
5	AS READ	AS READ	AS READ	AS READ	AS READ	AS READ	AS READ	AS READ	AS READ	AS READ
7.5	AS READ	AS READ	AS READ	AS READ	AS READ	AS READ	AS READ	AS READ	AS READ	AS READ
10	AS READ	AS READ	AS READ	AS READ	AS READ	AS READ	AS READ	AS READ	AS READ	AS READ

Off Axes IODINE Measurements (cpm) using a Ludlum #44-40 Probe for a 10 Cubic Foot Air Sample
(miles)

mile	center line	0.1	0.2	0.3	0.4	0.5	0.6	0.7	0.8	0.9
0.5	AS READ	AS READ	AS READ	AS READ	AS READ	AS READ	AS READ	AS READ	AS READ	AS READ
1	AS READ	AS READ	AS READ	AS READ	AS READ	AS READ	AS READ	AS READ	AS READ	AS READ
2	AS READ	AS READ	AS READ	AS READ	AS READ	AS READ	AS READ	AS READ	AS READ	AS READ
5	AS READ	AS READ	AS READ	AS READ	AS READ	AS READ	AS READ	AS READ	AS READ	AS READ
7.5	AS READ	AS READ	AS READ	AS READ	AS READ	AS READ	AS READ	AS READ	AS READ	AS READ
10	AS READ	AS READ	AS READ	AS READ	AS READ	AS READ	AS READ	AS READ	AS READ	AS READ

SCENARIO INFORMATION:

Simulated Time: 11:30
Interval Since Release Started (mins): 0:30

RELEASE IS FROM

Meteorological Inputs:

The ground level wind velocity: 7.0 mph
The ground level direction is from: 70.0 deg
Stability Class: C - Slightly Unstable

CALCULATED DOSES (mrem):

Distance (meters)	(miles)	Whole Body 5 cm Depth	Infant Thyroid
804.5	0.5	0.00E+00	0.00E+00
1609	1	0.00E+00	0.00E+00
3218	2	0.00E+00	0.00E+00
8045	5	0.00E+00	0.00E+00
12067.5	7.5	0.00E+00	0.00E+00
16090	10	0.00E+00	0.00E+00

Off Axes DEPOSITION (uCi/m2)
(miles)

mile	center line	0.1	0.2	0.3	0.4	0.5	0.6	0.7	0.8	0.9
0.5	0.00E+00	0.00E+00	0.00E+00	0.00E+00	0.00E+00	0.00E+00	0.00E+00	0.00E+00	0.00E+00	0.00E+00
1	0.00E+00	0.00E+00	0.00E+00	0.00E+00	0.00E+00	0.00E+00	0.00E+00	0.00E+00	0.00E+00	0.00E+00
2	0.00E+00	0.00E+00	0.00E+00	0.00E+00	0.00E+00	0.00E+00	0.00E+00	0.00E+00	0.00E+00	0.00E+00
5	0.00E+00	0.00E+00	0.00E+00	0.00E+00	0.00E+00	0.00E+00	0.00E+00	0.00E+00	0.00E+00	0.00E+00
7.5	0.00E+00	0.00E+00	0.00E+00	0.00E+00	0.00E+00	0.00E+00	0.00E+00	0.00E+00	0.00E+00	0.00E+00
10	0.00E+00	0.00E+00	0.00E+00	0.00E+00	0.00E+00	0.00E+00	0.00E+00	0.00E+00	0.00E+00	0.00E+00

Off Axes Six Inch Dose Rate (mR/hr)
(miles)

mile	center line	0.1	0.2	0.3	0.4	0.5	0.6	0.7	0.8	0.9
0.5	0.00E+00	0.00E+00	0.00E+00	0.00E+00	0.00E+00	0.00E+00	0.00E+00	0.00E+00	0.00E+00	0.00E+00
1	0.00E+00	0.00E+00	0.00E+00	0.00E+00	0.00E+00	0.00E+00	0.00E+00	0.00E+00	0.00E+00	0.00E+00
2	0.00E+00	0.00E+00	0.00E+00	0.00E+00	0.00E+00	0.00E+00	0.00E+00	0.00E+00	0.00E+00	0.00E+00
5	0.00E+00	0.00E+00	0.00E+00	0.00E+00	0.00E+00	0.00E+00	0.00E+00	0.00E+00	0.00E+00	0.00E+00
7.5	0.00E+00	0.00E+00	0.00E+00	0.00E+00	0.00E+00	0.00E+00	0.00E+00	0.00E+00	0.00E+00	0.00E+00
10	0.00E+00	0.00E+00	0.00E+00	0.00E+00	0.00E+00	0.00E+00	0.00E+00	0.00E+00	0.00E+00	0.00E+00

Off Axes WHOLE BODY Dose Rate (mrem/hr)
(miles)

mile	center line	0.1	0.2	0.3	0.4	0.5	0.6	0.7	0.8	0.9
0.5	0.00E+00	0.00E+00	0.00E+00	0.00E+00	0.00E+00	0.00E+00	0.00E+00	0.00E+00	0.00E+00	0.00E+00
1	0.00E+00	0.00E+00	0.00E+00	0.00E+00	0.00E+00	0.00E+00	0.00E+00	0.00E+00	0.00E+00	0.00E+00
2	0.00E+00	0.00E+00	0.00E+00	0.00E+00	0.00E+00	0.00E+00	0.00E+00	0.00E+00	0.00E+00	0.00E+00
5	0.00E+00	0.00E+00	0.00E+00	0.00E+00	0.00E+00	0.00E+00	0.00E+00	0.00E+00	0.00E+00	0.00E+00
7.5	0.00E+00	0.00E+00	0.00E+00	0.00E+00	0.00E+00	0.00E+00	0.00E+00	0.00E+00	0.00E+00	0.00E+00
10	0.00E+00	0.00E+00	0.00E+00	0.00E+00	0.00E+00	0.00E+00	0.00E+00	0.00E+00	0.00E+00	0.00E+00

Simulated Time: 11:30

Offsite
Offsite Data

Off Axes THYROID Dose Rate (mrem/hr)
(miles)

mile	center line	0.1	0.2	0.3	0.4	0.5	0.6	0.7	0.8	0.9
0.5	0.00E+00	0.00E+00	0.00E+00	0.00E+00	0.00E+00	0.00E+00	0.00E+00	0.00E+00	0.00E+00	0.00E+00
1	0.00E+00	0.00E+00	0.00E+00	0.00E+00	0.00E+00	0.00E+00	0.00E+00	0.00E+00	0.00E+00	0.00E+00
2	0.00E+00	0.00E+00	0.00E+00	0.00E+00	0.00E+00	0.00E+00	0.00E+00	0.00E+00	0.00E+00	0.00E+00
5	0.00E+00	0.00E+00	0.00E+00	0.00E+00	0.00E+00	0.00E+00	0.00E+00	0.00E+00	0.00E+00	0.00E+00
7.5	0.00E+00	0.00E+00	0.00E+00	0.00E+00	0.00E+00	0.00E+00	0.00E+00	0.00E+00	0.00E+00	0.00E+00
10	0.00E+00	0.00E+00	0.00E+00	0.00E+00	0.00E+00	0.00E+00	0.00E+00	0.00E+00	0.00E+00	0.00E+00

Off Axes NOBLE GAS Concentration (uCi/cc)
(miles)

mile	center line	0.1	0.2	0.3	0.4	0.5	0.6	0.7	0.8	0.9
0.5	0.00E+00	0.00E+00	0.00E+00	0.00E+00	0.00E+00	0.00E+00	0.00E+00	0.00E+00	0.00E+00	0.00E+00
1	0.00E+00	0.00E+00	0.00E+00	0.00E+00	0.00E+00	0.00E+00	0.00E+00	0.00E+00	0.00E+00	0.00E+00
2	0.00E+00	0.00E+00	0.00E+00	0.00E+00	0.00E+00	0.00E+00	0.00E+00	0.00E+00	0.00E+00	0.00E+00
5	0.00E+00	0.00E+00	0.00E+00	0.00E+00	0.00E+00	0.00E+00	0.00E+00	0.00E+00	0.00E+00	0.00E+00
7.5	0.00E+00	0.00E+00	0.00E+00	0.00E+00	0.00E+00	0.00E+00	0.00E+00	0.00E+00	0.00E+00	0.00E+00
10	0.00E+00	0.00E+00	0.00E+00	0.00E+00	0.00E+00	0.00E+00	0.00E+00	0.00E+00	0.00E+00	0.00E+00

Off Axes PARTICULATE Concentration (uCi/cc)
(miles)

mile	center line	0.1	0.2	0.3	0.4	0.5	0.6	0.7	0.8	0.9
0.5	0.00E+00	0.00E+00	0.00E+00	0.00E+00	0.00E+00	0.00E+00	0.00E+00	0.00E+00	0.00E+00	0.00E+00
1	0.00E+00	0.00E+00	0.00E+00	0.00E+00	0.00E+00	0.00E+00	0.00E+00	0.00E+00	0.00E+00	0.00E+00
2	0.00E+00	0.00E+00	0.00E+00	0.00E+00	0.00E+00	0.00E+00	0.00E+00	0.00E+00	0.00E+00	0.00E+00
5	0.00E+00	0.00E+00	0.00E+00	0.00E+00	0.00E+00	0.00E+00	0.00E+00	0.00E+00	0.00E+00	0.00E+00
7.5	0.00E+00	0.00E+00	0.00E+00	0.00E+00	0.00E+00	0.00E+00	0.00E+00	0.00E+00	0.00E+00	0.00E+00
10	0.00E+00	0.00E+00	0.00E+00	0.00E+00	0.00E+00	0.00E+00	0.00E+00	0.00E+00	0.00E+00	0.00E+00

Off Axes IODINE Concentration (uCi/cc)
(miles)

mile	center line	0.1	0.2	0.3	0.4	0.5	0.6	0.7	0.8	0.9
0.5	0.00E+00	0.00E+00	0.00E+00	0.00E+00	0.00E+00	0.00E+00	0.00E+00	0.00E+00	0.00E+00	0.00E+00
1	0.00E+00	0.00E+00	0.00E+00	0.00E+00	0.00E+00	0.00E+00	0.00E+00	0.00E+00	0.00E+00	0.00E+00
2	0.00E+00	0.00E+00	0.00E+00	0.00E+00	0.00E+00	0.00E+00	0.00E+00	0.00E+00	0.00E+00	0.00E+00
5	0.00E+00	0.00E+00	0.00E+00	0.00E+00	0.00E+00	0.00E+00	0.00E+00	0.00E+00	0.00E+00	0.00E+00
7.5	0.00E+00	0.00E+00	0.00E+00	0.00E+00	0.00E+00	0.00E+00	0.00E+00	0.00E+00	0.00E+00	0.00E+00
10	0.00E+00	0.00E+00	0.00E+00	0.00E+00	0.00E+00	0.00E+00	0.00E+00	0.00E+00	0.00E+00	0.00E+00

Off Axes Ground Deposition Measurements (cpm) for a Ludlum #44-40 Geiger Probe
(miles)

mile	center line	0.1	0.2	0.3	0.4	0.5	0.6	0.7	0.8	0.9
0.5	AS READ	AS READ	AS READ	AS READ	AS READ	AS READ	AS READ	AS READ	AS READ	AS READ
1	AS READ	AS READ	AS READ	AS READ	AS READ	AS READ	AS READ	AS READ	AS READ	AS READ
2	AS READ	AS READ	AS READ	AS READ	AS READ	AS READ	AS READ	AS READ	AS READ	AS READ
5	AS READ	AS READ	AS READ	AS READ	AS READ	AS READ	AS READ	AS READ	AS READ	AS READ
7.5	AS READ	AS READ	AS READ	AS READ	AS READ	AS READ	AS READ	AS READ	AS READ	AS READ
10	AS READ	AS READ	AS READ	AS READ	AS READ	AS READ	AS READ	AS READ	AS READ	AS READ

Off Axes Wipe Measurements (cpm) for a Ludlum #44-40 Geiger Probe
(miles)

mile	center line	0.1	0.2	0.3	0.4	0.5	0.6	0.7	0.8	0.9
0.5	AS READ	AS READ	AS READ	AS READ	AS READ	AS READ	AS READ	AS READ	AS READ	AS READ
1	AS READ	AS READ	AS READ	AS READ	AS READ	AS READ	AS READ	AS READ	AS READ	AS READ
2	AS READ	AS READ	AS READ	AS READ	AS READ	AS READ	AS READ	AS READ	AS READ	AS READ
5	AS READ	AS READ	AS READ	AS READ	AS READ	AS READ	AS READ	AS READ	AS READ	AS READ
7.5	AS READ	AS READ	AS READ	AS READ	AS READ	AS READ	AS READ	AS READ	AS READ	AS READ
10	AS READ	AS READ	AS READ	AS READ	AS READ	AS READ	AS READ	AS READ	AS READ	AS READ

Off Axes PARTICULATE Measurements (cpm) using a Ludlum #44-40 Probe for a 30 Cubic Foot Air Sample
(miles)

mile	center line	0.1	0.2	0.3	0.4	0.5	0.6	0.7	0.8	0.9
0.5	AS READ	AS READ	AS READ	AS READ	AS READ	AS READ	AS READ	AS READ	AS READ	AS READ
1	AS READ	AS READ	AS READ	AS READ	AS READ	AS READ	AS READ	AS READ	AS READ	AS READ
2	AS READ	AS READ	AS READ	AS READ	AS READ	AS READ	AS READ	AS READ	AS READ	AS READ
5	AS READ	AS READ	AS READ	AS READ	AS READ	AS READ	AS READ	AS READ	AS READ	AS READ
7.5	AS READ	AS READ	AS READ	AS READ	AS READ	AS READ	AS READ	AS READ	AS READ	AS READ
10	AS READ	AS READ	AS READ	AS READ	AS READ	AS READ	AS READ	AS READ	AS READ	AS READ

Off Axes IODINE Measurements (cpm) using a Ludlum #44-40 Probe for a 10 Cubic Foot Air Sample
(miles)

mile	center line	0.1	0.2	0.3	0.4	0.5	0.6	0.7	0.8	0.9
0.5	AS READ	AS READ	AS READ	AS READ	AS READ	AS READ	AS READ	AS READ	AS READ	AS READ
1	AS READ	AS READ	AS READ	AS READ	AS READ	AS READ	AS READ	AS READ	AS READ	AS READ
2	AS READ	AS READ	AS READ	AS READ	AS READ	AS READ	AS READ	AS READ	AS READ	AS READ
5	AS READ	AS READ	AS READ	AS READ	AS READ	AS READ	AS READ	AS READ	AS READ	AS READ
7.5	AS READ	AS READ	AS READ	AS READ	AS READ	AS READ	AS READ	AS READ	AS READ	AS READ
10	AS READ	AS READ	AS READ	AS READ	AS READ	AS READ	AS READ	AS READ	AS READ	AS READ

SCENARIO INFORMATION:

Simulated Time: 11:45
Interval Since Release Started (mins): 0:45

RELEASE IS FROM

Meteorological Inputs:

The ground level wind velocity: 7.0 mph
The ground level direction is from: 70.0 deg
Stability Class: C - Slightly Unstable

CALCULATED DOSES (mrem):

Distance (meters)	(miles)	Whole Body 5 cm Depth	Infant Thyroid
804.5	0.5	1.15E+02	4.97E+00
1609	1	3.43E+01	1.48E+00
3218	2	9.88E+00	4.27E-01
8045	5	1.88E+00	8.13E-02
12067.5	7.5	9.03E-01	3.90E-02
16090	10	5.36E-01	2.31E-02

Off Axes DEPOSITION (uCi/m2)
(miles)

mile	center line	0.1	0.2	0.3	0.4	0.5	0.6	0.7	0.8	0.9
0.5	6.07E+02	1.14E+02	1.50E+00	7.58E-01	7.58E-01	7.58E-01	7.58E-01	7.58E-01	7.58E-01	7.58E-01
1	1.81E+02	1.13E+02	2.73E+01	3.18E+00	8.43E-01	7.59E-01	7.58E-01	7.58E-01	7.58E-01	7.58E-01
2	5.28E+01	4.61E+01	3.08E+01	1.59E+01	6.57E+00	2.45E+00	1.13E+00	8.21E-01	7.66E-01	7.59E-01
5	1.07E+01	1.04E+01	9.69E+00	8.59E+00	7.28E+00	5.91E+00	4.62E+00	3.51E+00	2.61E+00	1.95E+00
7.5	5.51E+00	5.45E+00	5.28E+00	5.00E+00	4.65E+00	4.23E+00	3.78E+00	3.32E+00	2.88E+00	2.47E+00
10	3.58E+00	3.56E+00	3.50E+00	3.40E+00	3.26E+00	3.10E+00	2.91E+00	2.71E+00	2.51E+00	2.30E+00

Off Axes Six Inch Dose Rate (mR/hr)
(miles)

mile	center line	0.1	0.2	0.3	0.4	0.5	0.6	0.7	0.8	0.9
0.5	1.34E+02	2.52E+01	3.40E-01	1.76E-01	1.76E-01	1.76E-01	1.76E-01	1.76E-01	1.76E-01	1.76E-01
1	4.00E+01	2.48E+01	6.03E+00	7.10E-01	1.95E-01	1.77E-01	1.76E-01	1.76E-01	1.76E-01	1.76E-01
2	1.17E+01	1.02E+01	6.81E+00	3.52E+00	1.46E+00	5.50E-01	2.59E-01	1.90E-01	1.78E-01	1.77E-01
5	2.36E+00	2.31E+00	2.15E+00	1.91E+00	1.62E+00	1.31E+00	1.03E+00	7.83E-01	5.86E-01	4.39E-01
7.5	1.23E+00	1.21E+00	1.17E+00	1.11E+00	1.03E+00	9.42E-01	8.43E-01	7.43E-01	6.45E-01	5.55E-01
10	7.99E-01	7.95E-01	7.81E-01	7.59E-01	7.29E-01	6.93E-01	6.52E-01	6.08E-01	5.62E-01	5.16E-01

Off Axes WHOLE BODY Dose Rate (mrem/hr)
(miles)

mile	center line	0.1	0.2	0.3	0.4	0.5	0.6	0.7	0.8	0.9
0.5	7.57E+02	1.42E+02	9.28E-01	2.13E-04	1.71E-09	4.82E-16	4.75E-24	1.64E-33	0.00E+00	0.00E+00
1	2.25E+02	1.40E+02	3.32E+01	3.02E+00	1.05E-01	1.41E-03	7.25E-06	1.43E-08	1.08E-11	3.13E-15
2	6.50E+01	5.67E+01	3.76E+01	1.89E+01	7.26E+00	2.11E+00	4.68E-01	7.89E-02	1.01E-02	9.83E-04
5	1.24E+01	1.21E+01	1.12E+01	9.78E+00	8.15E+00	6.44E+00	4.83E+00	3.43E+00	2.32E+00	1.49E+00
7.5	5.94E+00	5.86E+00	5.65E+00	5.30E+00	4.86E+00	4.34E+00	3.77E+00	3.20E+00	2.65E+00	2.14E+00
10	3.52E+00	3.50E+00	3.42E+00	3.30E+00	3.13E+00	2.92E+00	2.69E+00	2.44E+00	2.18E+00	1.92E+00

Off Axes THYROID Dose Rate (mrem/hr)
(miles)

mile	center line	0.1	0.2	0.3	0.4	0.5	0.6	0.7	0.8	0.9
0.5	2.43E+01	4.54E+00	2.97E-02	6.82E-06	5.48E-11	1.54E-17	1.52E-25	5.24E-35	0.00E+00	0.00E+00
1	7.22E+00	4.47E+00	1.06E+00	9.67E-02	3.38E-03	4.52E-05	2.32E-07	4.58E-10	3.46E-13	1.00E-16
2	2.08E+00	1.82E+00	1.20E+00	6.07E-01	2.32E-01	6.77E-02	1.50E-02	2.53E-03	3.23E-04	3.15E-05
5	3.97E-01	3.86E-01	3.57E-01	3.13E-01	2.61E-01	2.06E-01	1.55E-01	1.10E-01	7.42E-02	4.76E-02
7.5	1.90E-01	1.88E-01	1.81E-01	1.70E-01	1.56E-01	1.39E-01	1.21E-01	1.03E-01	8.50E-02	6.86E-02
10	1.13E-01	1.12E-01	1.10E-01	1.06E-01	1.00E-01	9.36E-02	8.62E-02	7.82E-02	6.99E-02	6.16E-02

Off Axes NOBLE GAS Concentration (uCi/cc)
(miles)

mile	center line	0.1	0.2	0.3	0.4	0.5	0.6	0.7	0.8	0.9
0.5	2.37E-03	4.43E-04	2.90E-06	6.66E-10	5.35E-15	1.51E-21	1.48E-29	5.12E-39	0.00E+00	0.00E+00
1	7.05E-04	4.36E-04	1.04E-04	9.44E-06	3.30E-07	4.41E-09	2.27E-11	4.46E-14	3.37E-17	9.77E-21
2	2.03E-04	1.77E-04	1.17E-04	5.92E-05	2.27E-05	6.61E-06	1.46E-06	2.46E-07	3.15E-08	3.07E-09
5	3.87E-05	3.77E-05	3.49E-05	3.06E-05	2.55E-05	2.01E-05	1.51E-05	1.07E-05	7.24E-06	4.64E-06
7.5	1.86E-05	1.83E-05	1.76E-05	1.66E-05	1.52E-05	1.35E-05	1.18E-05	1.00E-05	8.29E-06	6.69E-06
10	1.10E-05	1.09E-05	1.07E-05	1.03E-05	9.77E-06	9.13E-06	8.41E-06	7.63E-06	6.82E-06	6.01E-06

Off Axes PARTICULATE Concentration (uCi/cc)
(miles)

mile	center line	0.1	0.2	0.3	0.4	0.5	0.6	0.7	0.8	0.9
0.5	2.02E-04	3.78E-05	2.48E-07	5.68E-11	4.57E-16	1.28E-22	1.27E-30	4.37E-40	0.00E+00	0.00E+00
1	6.01E-05	3.72E-05	8.84E-06	8.05E-07	2.81E-08	3.77E-10	1.93E-12	3.81E-15	2.88E-18	8.34E-22
2	1.73E-05	1.51E-05	1.00E-05	5.05E-06	1.94E-06	5.64E-07	1.25E-07	2.10E-08	2.69E-09	2.62E-10
5	3.30E-06	3.22E-06	2.97E-06	2.61E-06	2.17E-06	1.72E-06	1.29E-06	9.16E-07	6.18E-07	3.96E-07
7.5	1.58E-06	1.56E-06	1.51E-06	1.41E-06	1.29E-06	1.16E-06	1.01E-06	8.55E-07	7.08E-07	5.71E-07
10	9.40E-07	9.33E-07	9.12E-07	8.79E-07	8.34E-07	7.80E-07	7.18E-07	6.51E-07	5.82E-07	5.13E-07

Off Axes IODINE Concentration (uCi/cc)
(miles)

mile	center line	0.1	0.2	0.3	0.4	0.5	0.6	0.7	0.8	0.9
0.5	9.78E-08	1.83E-08	1.20E-10	2.75E-14	2.21E-19	6.22E-26	6.13E-34	2.10E-43	0.00E+00	0.00E+00
1	2.91E-08	1.80E-08	4.28E-09	3.90E-10	1.36E-11	1.82E-13	9.37E-16	1.85E-18	1.39E-21	4.04E-25
2	8.40E-09	7.32E-09	4.85E-09	2.45E-09	9.37E-10	2.73E-10	6.05E-11	1.02E-11	1.30E-12	1.27E-13
5	1.60E-09	1.56E-09	1.44E-09	1.26E-09	1.05E-09	8.31E-10	6.23E-10	4.43E-10	2.99E-10	1.92E-10
7.5	7.67E-10	7.57E-10	7.29E-10	6.85E-10	6.27E-10	5.60E-10	4.88E-10	4.14E-10	3.43E-10	2.77E-10
10	4.55E-10	4.52E-10	4.42E-10	4.26E-10	4.04E-10	3.78E-10	3.48E-10	3.15E-10	2.82E-10	2.48E-10

Off Axes Ground Deposition Measurements (cpm) for a Ludlum #44-40 Geiger Probe
(miles)

mile	center line	0.1	0.2	0.3	0.4	0.5	0.6	0.7	0.8	0.9
0.5	2.28E+06	4.27E+05	2.82E+03	1.83E+01	1.77E+01	1.77E+01	1.77E+01	1.77E+01	1.77E+01	1.77E+01
1	6.80E+05	4.21E+05	1.00E+05	9.13E+03	3.36E+02	2.20E+01	1.77E+01	1.77E+01	1.77E+01	1.77E+01
2	1.96E+05	1.71E+05	1.13E+05	5.71E+04	2.19E+04	6.39E+03	1.43E+03	2.56E+02	4.82E+01	2.07E+01
5	3.74E+04	3.64E+04	3.37E+04	2.95E+04	2.46E+04	1.94E+04	1.46E+04	1.04E+04	7.01E+03	4.50E+03
7.5	1.79E+04	1.77E+04	1.71E+04	1.60E+04	1.47E+04	1.31E+04	1.14E+04	9.68E+03	8.02E+03	6.48E+03
10	1.07E+04	1.06E+04	1.03E+04	9.96E+03	9.45E+03	8.84E+03	8.14E+03	7.38E+03	6.60E+03	5.82E+03

Off Axes Wipe Measurements (cpm) for a Ludlum #44-40 Geiger Probe
(miles)

mile	center line	0.1	0.2	0.3	0.4	0.5	0.6	0.7	0.8	0.9
0.5	8.77E+06	1.65E+06	2.17E+04	1.10E+04	1.10E+04	1.10E+04	1.10E+04	1.10E+04	1.10E+04	1.10E+04
1	2.62E+06	1.63E+06	3.95E+05	4.59E+04	1.22E+04	1.10E+04	1.10E+04	1.10E+04	1.10E+04	1.10E+04
2	7.63E+05	6.67E+05	4.46E+05	2.30E+05	9.49E+04	3.54E+04	1.64E+04	1.19E+04	1.11E+04	1.10E+04
5	1.54E+05	1.51E+05	1.40E+05	1.24E+05	1.05E+05	8.54E+04	6.68E+04	5.07E+04	3.78E+04	2.81E+04
7.5	7.97E+04	7.88E+04	7.63E+04	7.23E+04	6.71E+04	6.11E+04	5.46E+04	4.80E+04	4.17E+04	3.57E+04
10	5.17E+04	5.14E+04	5.05E+04	4.91E+04	4.71E+04	4.48E+04	4.21E+04	3.92E+04	3.62E+04	3.32E+04

Off Axes PARTICULATE Measurements (cpm) using a Ludlum #44-40 Probe for a 30 Cubic Foot Air Sample
(miles)

mile	center line	0.1	0.2	0.3	0.4	0.5	0.6	0.7	0.8	0.9
0.5	3.81E+07	7.13E+06	4.67E+04	1.07E+01	8.61E-05	2.42E-11	2.39E-19	8.24E-29	AS READ	AS READ
1	1.13E+07	7.02E+06	1.67E+06	1.52E+05	5.30E+03	7.10E+01	3.65E-01	7.19E-04	5.43E-07	1.57E-10
2	3.27E+06	2.85E+06	1.89E+06	9.52E+05	3.65E+05	1.06E+05	2.36E+04	3.97E+03	5.08E+02	4.94E+01
5	6.23E+05	6.07E+05	5.61E+05	4.92E+05	4.10E+05	3.24E+05	2.43E+05	1.73E+05	1.17E+05	7.47E+04
7.5	2.99E+05	2.95E+05	2.84E+05	2.67E+05	2.44E+05	2.18E+05	1.90E+05	1.61E+05	1.33E+05	1.08E+05
10	1.77E+05	1.76E+05	1.72E+05	1.66E+05	1.57E+05	1.47E+05	1.35E+05	1.23E+05	1.10E+05	9.67E+04

Off Axes IODINE Measurements (cpm) using a Ludlum #44-40 Probe for a 10 Cubic Foot Air Sample
(miles)

mile	center line	0.1	0.2	0.3	0.4	0.5	0.6	0.7	0.8	0.9
0.5	1.27E+07	2.38E+06	1.56E+04	3.57E+00	2.87E-05	8.08E-12	7.96E-20	2.75E-29	AS READ	AS READ
1	3.78E+06	2.34E+06	5.56E+05	5.06E+04	1.77E+03	2.37E+01	1.22E-01	2.40E-04	1.81E-07	5.24E-11
2	1.09E+06	9.50E+05	6.30E+05	3.17E+05	1.22E+05	3.54E+04	7.85E+03	1.32E+03	1.69E+02	1.65E+01
5	2.08E+05	2.02E+05	1.87E+05	1.64E+05	1.37E+05	1.08E+05	8.09E+04	5.76E+04	3.89E+04	2.49E+04
7.5	9.96E+04	9.83E+04	9.47E+04	8.89E+04	8.14E+04	7.27E+04	6.33E+04	5.37E+04	4.45E+04	3.59E+04
10	5.91E+04	5.87E+04	5.74E+04	5.52E+04	5.24E+04	4.90E+04	4.51E+04	4.09E+04	3.66E+04	3.22E+04

SCENARIO INFORMATION:

Simulated Time: 12:00
Interval Since Release Started (mins): 1:00

RELEASE IS FROM

Meteorological Inputs:

The ground level wind velocity: 7.0 mph
The ground level direction is from: 70.0 deg
Stability Class: C - Slightly Unstable

CALCULATED DOSES (mrem):

Distance (meters)	(miles)	Whole Body 5 cm Depth	Infant Thyroid
804.5	0.5	4.77E+02	1.24E+01
1609	1	1.42E+02	3.69E+00
3218	2	4.09E+01	1.06E+00
8045	5	7.80E+00	2.03E-01
12067.5	7.5	3.74E+00	9.72E-02
16090	10	2.22E+00	5.77E-02

Off Axes DEPOSITION (uCi/m2)
(miles)

mile	center line	0.1	0.2	0.3	0.4	0.5	0.6	0.7	0.8	0.9
0.5	1.34E+03	2.53E+02	4.68E+00	3.04E+00	3.04E+00	3.04E+00	3.04E+00	3.04E+00	3.04E+00	3.04E+00
1	4.01E+02	2.50E+02	6.16E+01	8.38E+00	3.23E+00	3.05E+00	3.04E+00	3.04E+00	3.04E+00	3.04E+00
2	1.18E+02	1.03E+02	6.94E+01	3.65E+01	1.59E+01	6.78E+00	3.87E+00	3.18E+00	3.06E+00	3.04E+00
5	2.49E+01	2.44E+01	2.27E+01	2.03E+01	1.74E+01	1.44E+01	1.16E+01	9.11E+00	7.14E+00	5.67E+00
7.5	1.35E+01	1.34E+01	1.30E+01	1.24E+01	1.16E+01	1.07E+01	9.71E+00	8.70E+00	7.73E+00	6.83E+00
10	9.27E+00	9.22E+00	9.09E+00	8.86E+00	8.57E+00	8.21E+00	7.80E+00	7.36E+00	6.90E+00	6.44E+00

Off Axes Six Inch Dose Rate (mR/hr)
(miles)

mile	center line	0.1	0.2	0.3	0.4	0.5	0.6	0.7	0.8	0.9
0.5	2.58E+02	4.88E+01	9.25E-01	6.10E-01	6.10E-01	6.10E-01	6.10E-01	6.10E-01	6.10E-01	6.10E-01
1	7.73E+01	4.81E+01	1.19E+01	1.64E+00	6.46E-01	6.10E-01	6.10E-01	6.10E-01	6.10E-01	6.10E-01
2	2.27E+01	1.99E+01	1.34E+01	7.05E+00	3.08E+00	1.33E+00	7.69E-01	6.36E-01	6.13E-01	6.10E-01
5	4.82E+00	4.71E+00	4.40E+00	3.94E+00	3.38E+00	2.80E+00	2.25E+00	1.78E+00	1.40E+00	1.11E+00
7.5	2.63E+00	2.60E+00	2.53E+00	2.41E+00	2.26E+00	2.08E+00	1.89E+00	1.70E+00	1.51E+00	1.34E+00
10	1.81E+00	1.80E+00	1.77E+00	1.73E+00	1.67E+00	1.60E+00	1.53E+00	1.44E+00	1.35E+00	1.26E+00

Off Axes WHOLE BODY Dose Rate (mrem/hr)
(miles)

mile	center line	0.1	0.2	0.3	0.4	0.5	0.6	0.7	0.8	0.9
0.5	1.69E+03	3.17E+02	2.08E+00	4.76E-04	3.83E-09	1.08E-15	1.06E-23	3.66E-33	0.00E+00	0.00E+00
1	5.04E+02	3.12E+02	7.41E+01	6.75E+00	2.36E-01	3.16E-03	1.62E-05	3.19E-08	2.41E-11	6.99E-15
2	1.45E+02	1.27E+02	8.40E+01	4.23E+01	1.62E+01	4.73E+00	1.05E+00	1.76E-01	2.26E-02	2.20E-03
5	2.77E+01	2.70E+01	2.49E+01	2.19E+01	1.82E+01	1.44E+01	1.08E+01	7.67E+00	5.18E+00	3.32E+00
7.5	1.33E+01	1.31E+01	1.26E+01	1.19E+01	1.09E+01	9.69E+00	8.44E+00	7.16E+00	5.93E+00	4.79E+00
10	7.88E+00	7.82E+00	7.65E+00	7.37E+00	6.99E+00	6.53E+00	6.02E+00	5.46E+00	4.88E+00	4.30E+00

Off Axes THYROID Dose Rate (mrem/hr)
(miles)

mile	center line	0.1	0.2	0.3	0.4	0.5	0.6	0.7	0.8	0.9
0.5	3.10E+01	5.81E+00	3.81E-02	8.74E-06	7.02E-11	1.98E-17	1.95E-25	6.71E-35	0.00E+00	0.00E+00
1	9.25E+00	5.73E+00	1.36E+00	1.24E-01	4.32E-03	5.79E-05	2.97E-07	5.86E-10	4.42E-13	1.28E-16
2	2.67E+00	2.32E+00	1.54E+00	7.76E-01	2.98E-01	8.67E-02	1.92E-02	3.23E-03	4.14E-04	4.03E-05
5	5.08E-01	4.95E-01	4.57E-01	4.01E-01	3.34E-01	2.64E-01	1.98E-01	1.41E-01	9.50E-02	6.09E-02
7.5	2.44E-01	2.40E-01	2.32E-01	2.17E-01	1.99E-01	1.78E-01	1.55E-01	1.31E-01	1.09E-01	8.78E-02
10	1.45E-01	1.43E-01	1.40E-01	1.35E-01	1.28E-01	1.20E-01	1.10E-01	1.00E-01	8.95E-02	7.88E-02

Off Axes NOBLE GAS Concentration (uCi/cc)
(miles)

mile	center line	0.1	0.2	0.3	0.4	0.5	0.6	0.7	0.8	0.9
0.5	5.81E-03	1.09E-03	7.13E-06	1.64E-09	1.31E-14	3.70E-21	3.64E-29	1.26E-38	0.00E+00	0.00E+00
1	1.73E-03	1.07E-03	2.55E-04	2.32E-05	8.09E-07	1.08E-08	5.57E-11	1.10E-13	8.28E-17	2.40E-20
2	4.99E-04	4.35E-04	2.88E-04	1.45E-04	5.57E-05	1.62E-05	3.59E-06	6.05E-07	7.75E-08	7.54E-09
5	9.51E-05	9.26E-05	8.56E-05	7.51E-05	6.25E-05	4.94E-05	3.70E-05	2.63E-05	1.78E-05	1.14E-05
7.5	4.56E-05	4.50E-05	4.33E-05	4.07E-05	3.73E-05	3.33E-05	2.90E-05	2.46E-05	2.04E-05	1.64E-05
10	2.71E-05	2.69E-05	2.63E-05	2.53E-05	2.40E-05	2.24E-05	2.07E-05	1.87E-05	1.68E-05	1.48E-05

Off Axes PARTICULATE Concentration (uCi/cc)
(miles)

mile	center line	0.1	0.2	0.3	0.4	0.5	0.6	0.7	0.8	0.9
0.5	4.46E-04	8.34E-05	5.47E-07	1.25E-10	1.01E-15	2.84E-22	2.79E-30	9.64E-40	0.00E+00	0.00E+00
1	1.33E-04	8.22E-05	1.95E-05	1.78E-06	6.21E-08	8.32E-10	4.27E-12	8.41E-15	6.35E-18	1.84E-21
2	3.83E-05	3.34E-05	2.21E-05	1.11E-05	4.27E-06	1.24E-06	2.76E-07	4.64E-08	5.94E-09	5.79E-10
5	7.29E-06	7.10E-06	6.57E-06	5.76E-06	4.80E-06	3.79E-06	2.84E-06	2.02E-06	1.36E-06	8.74E-07
7.5	3.50E-06	3.45E-06	3.32E-06	3.12E-06	2.86E-06	2.55E-06	2.22E-06	1.89E-06	1.56E-06	1.26E-06
10	2.08E-06	2.06E-06	2.01E-06	1.94E-06	1.84E-06	1.72E-06	1.58E-06	1.44E-06	1.29E-06	1.13E-06

Off Axes IODINE Concentration (uCi/cc)
(miles)

mile	center line	0.1	0.2	0.3	0.4	0.5	0.6	0.7	0.8	0.9
0.5	1.26E-07	2.36E-08	1.54E-10	3.54E-14	2.85E-19	8.01E-26	7.89E-34	2.72E-43	0.00E+00	0.00E+00
1	3.75E-08	2.32E-08	5.52E-09	5.02E-10	1.75E-11	2.35E-13	1.21E-15	2.38E-18	1.79E-21	5.20E-25
2	1.08E-08	9.43E-09	6.25E-09	3.15E-09	1.21E-09	3.52E-10	7.79E-11	1.31E-11	1.68E-12	1.63E-13
5	2.06E-09	2.01E-09	1.86E-09	1.63E-09	1.36E-09	1.07E-09	8.03E-10	5.71E-10	3.86E-10	2.47E-10
7.5	9.88E-10	9.75E-10	9.39E-10	8.82E-10	8.08E-10	7.21E-10	6.28E-10	5.33E-10	4.41E-10	3.56E-10
10	5.86E-10	5.82E-10	5.69E-10	5.48E-10	5.20E-10	4.86E-10	4.48E-10	4.06E-10	3.63E-10	3.20E-10

Off Axes Ground Deposition Measurements (cpm) for a Ludlum #44-40 Geiger Probe
(miles)

mile	center line	0.1	0.2	0.3	0.4	0.5	0.6	0.7	0.8	0.9
0.5	5.10E+06	9.54E+05	6.30E+03	5.12E+01	4.98E+01	4.98E+01	4.98E+01	4.98E+01	4.98E+01	4.98E+01
1	1.52E+06	9.40E+05	2.23E+05	2.04E+04	7.60E+02	5.93E+01	4.98E+01	4.98E+01	4.98E+01	4.98E+01
2	4.38E+05	3.82E+05	2.53E+05	1.28E+05	4.89E+04	1.43E+04	3.20E+03	5.81E+02	1.18E+02	5.64E+01
5	8.34E+04	8.13E+04	7.51E+04	6.59E+04	5.49E+04	4.34E+04	3.25E+04	2.32E+04	1.57E+04	1.00E+04
7.5	4.00E+04	3.95E+04	3.81E+04	3.58E+04	3.27E+04	2.92E+04	2.55E+04	2.16E+04	1.79E+04	1.45E+04
10	2.38E+04	2.36E+04	2.31E+04	2.22E+04	2.11E+04	1.97E+04	1.82E+04	1.65E+04	1.47E+04	1.30E+04

Simulated Time: 12:00

Off Axes Wipe Measurements (cpm) for a Ludlum #44-40 Geiger Probe
(miles)

mile	center line	0.1	0.2	0.3	0.4	0.5	0.6	0.7	0.8	0.9
0.5	1.94E+07	3.66E+06	6.77E+04	4.40E+04	4.40E+04	4.40E+04	4.40E+04	4.40E+04	4.40E+04	4.40E+04
1	5.80E+06	3.61E+06	8.91E+05	1.21E+05	4.67E+04	4.40E+04	4.40E+04	4.40E+04	4.40E+04	4.40E+04
2	1.70E+06	1.49E+06	1.00E+06	5.27E+05	2.29E+05	9.79E+04	5.59E+04	4.60E+04	4.42E+04	4.40E+04
5	3.60E+05	3.52E+05	3.29E+05	2.94E+05	2.52E+05	2.08E+05	1.67E+05	1.32E+05	1.03E+05	8.19E+04
7.5	1.96E+05	1.94E+05	1.88E+05	1.79E+05	1.68E+05	1.55E+05	1.40E+05	1.26E+05	1.12E+05	9.87E+04
10	1.34E+05	1.33E+05	1.31E+05	1.28E+05	1.24E+05	1.19E+05	1.13E+05	1.06E+05	9.97E+04	9.30E+04

Off Axes PARTICULATE Measurements (cpm) using a Ludlum #44-40 Probe for a 30 Cubic Foot Air Sample
(miles)

mile	center line	0.1	0.2	0.3	0.4	0.5	0.6	0.7	0.8	0.9
0.5	8.41E+07	1.57E+07	1.03E+05	2.37E+01	1.90E-04	5.35E-11	5.27E-19	1.82E-28	AS READ	AS READ
1	2.50E+07	1.55E+07	3.68E+06	3.35E+05	1.17E+04	1.57E+02	8.05E-01	1.59E-03	1.20E-06	3.47E-10
2	7.22E+06	6.29E+06	4.17E+06	2.10E+06	8.06E+05	2.35E+05	5.20E+04	8.75E+03	1.12E+03	1.09E+02
5	1.38E+06	1.34E+06	1.24E+06	1.09E+06	9.04E+05	7.15E+05	5.36E+05	3.81E+05	2.57E+05	1.65E+05
7.5	6.59E+05	6.51E+05	6.27E+05	5.89E+05	5.39E+05	4.81E+05	4.19E+05	3.56E+05	2.95E+05	2.38E+05
10	3.91E+05	3.88E+05	3.80E+05	3.66E+05	3.47E+05	3.25E+05	2.99E+05	2.71E+05	2.42E+05	2.13E+05

Off Axes IODINE Measurements (cpm) using a Ludlum #44-40 Probe for a 10 Cubic Foot Air Sample
(miles)

mile	center line	0.1	0.2	0.3	0.4	0.5	0.6	0.7	0.8	0.9
0.5	2.80E+07	5.24E+06	3.44E+04	7.88E+00	6.34E-05	1.78E-11	1.76E-19	6.06E-29	AS READ	AS READ
1	8.35E+06	5.17E+06	1.23E+06	1.12E+05	3.90E+03	5.23E+01	2.68E-01	5.29E-04	3.99E-07	1.16E-10
2	2.41E+06	2.10E+06	1.39E+06	7.01E+05	2.69E+05	7.82E+04	1.73E+04	2.92E+03	3.74E+02	3.64E+01
5	4.58E+05	4.47E+05	4.13E+05	3.62E+05	3.01E+05	2.38E+05	1.79E+05	1.27E+05	8.58E+04	5.50E+04
7.5	2.20E+05	2.17E+05	2.09E+05	1.96E+05	1.80E+05	1.60E+05	1.40E+05	1.19E+05	9.82E+04	7.93E+04
10	1.30E+05	1.29E+05	1.27E+05	1.22E+05	1.16E+05	1.08E+05	9.96E+04	9.04E+04	8.08E+04	7.11E+04

SCENARIO INFORMATION:

Simulated Time: 12:15
Interval Since Release Started (mins): 1:15

RELEASE IS FROM

Meteorological Inputs:

The ground level wind velocity: 7.0 mph
The ground level direction is from: 70.0 deg
Stability Class: C - Slightly Unstable

CALCULATED DOSES (mrem):

Distance (meters)	(miles)	Whole Body 5 cm Depth	Infant Thyroid
804.5	0.5	8.99E+02	1.96E+01
1609	1	2.68E+02	5.83E+00
3218	2	7.72E+01	1.68E+00
8045	5	1.47E+01	3.20E-01
12067.5	7.5	7.05E+00	1.53E-01
16090	10	4.18E+00	9.11E-02

Off Axes DEPOSITION (uCi/m2)
(miles)

mile	center line	0.1	0.2	0.3	0.4	0.5	0.6	0.7	0.8	0.9
0.5	1.33E+03	2.51E+02	4.99E+00	3.37E+00	3.37E+00	3.37E+00	3.37E+00	3.37E+00	3.37E+00	3.37E+00
1	3.98E+02	2.48E+02	6.14E+01	8.65E+00	3.55E+00	3.37E+00	3.37E+00	3.37E+00	3.37E+00	3.37E+00
2	1.17E+02	1.03E+02	6.91E+01	3.65E+01	1.61E+01	7.07E+00	4.19E+00	3.50E+00	3.38E+00	3.37E+00
5	2.51E+01	2.45E+01	2.29E+01	2.05E+01	1.76E+01	1.46E+01	1.18E+01	9.38E+00	7.42E+00	5.97E+00
7.5	1.38E+01	1.36E+01	1.33E+01	1.27E+01	1.19E+01	1.10E+01	9.97E+00	8.98E+00	8.01E+00	7.12E+00
10	9.54E+00	9.49E+00	9.36E+00	9.14E+00	8.84E+00	8.48E+00	8.08E+00	7.64E+00	7.19E+00	6.73E+00

Off Axes Six Inch Dose Rate (mR/hr)
(miles)

mile	center line	0.1	0.2	0.3	0.4	0.5	0.6	0.7	0.8	0.9
0.5	2.35E+02	4.44E+01	8.96E-01	6.09E-01	6.09E-01	6.09E-01	6.09E-01	6.09E-01	6.09E-01	6.09E-01
1	7.03E+01	4.38E+01	1.09E+01	1.54E+00	6.41E-01	6.09E-01	6.09E-01	6.09E-01	6.09E-01	6.09E-01
2	2.07E+01	1.81E+01	1.22E+01	6.47E+00	2.85E+00	1.26E+00	7.54E-01	6.33E-01	6.12E-01	6.09E-01
5	4.44E+00	4.34E+00	4.06E+00	3.64E+00	3.13E+00	2.60E+00	2.10E+00	1.67E+00	1.33E+00	1.07E+00
7.5	2.45E+00	2.42E+00	2.36E+00	2.25E+00	2.11E+00	1.95E+00	1.78E+00	1.60E+00	1.43E+00	1.27E+00
10	1.70E+00	1.69E+00	1.67E+00	1.63E+00	1.58E+00	1.51E+00	1.44E+00	1.36E+00	1.28E+00	1.20E+00

Off Axes WHOLE BODY Dose Rate (mrem/hr)
(miles)

mile	center line	0.1	0.2	0.3	0.4	0.5	0.6	0.7	0.8	0.9
0.5	1.69E+03	3.16E+02	2.07E+00	4.75E-04	3.82E-09	1.07E-15	1.06E-23	3.65E-33	0.00E+00	0.00E+00
1	5.03E+02	3.11E+02	7.39E+01	6.73E+00	2.35E-01	3.15E-03	1.62E-05	3.19E-08	2.41E-11	6.97E-15
2	1.45E+02	1.26E+02	8.38E+01	4.22E+01	1.62E+01	4.71E+00	1.04E+00	1.76E-01	2.25E-02	2.19E-03
5	2.76E+01	2.69E+01	2.49E+01	2.18E+01	1.82E+01	1.43E+01	1.08E+01	7.65E+00	5.17E+00	3.31E+00
7.5	1.32E+01	1.31E+01	1.26E+01	1.18E+01	1.08E+01	9.67E+00	8.42E+00	7.15E+00	5.92E+00	4.78E+00
10	7.86E+00	7.80E+00	7.63E+00	7.35E+00	6.97E+00	6.52E+00	6.00E+00	5.45E+00	4.87E+00	4.29E+00

Off Axes THYROID Dose Rate (mrem/hr)
(miles)

mile	center line	0.1	0.2	0.3	0.4	0.5	0.6	0.7	0.8	0.9
0.5	2.82E+01	5.27E+00	3.45E-02	7.92E-06	6.37E-11	1.79E-17	1.76E-25	6.09E-35	0.00E+00	0.00E+00
1	8.39E+00	5.19E+00	1.23E+00	1.12E-01	3.92E-03	5.25E-05	2.70E-07	5.31E-10	4.01E-13	1.16E-16
2	2.42E+00	2.11E+00	1.40E+00	7.04E-01	2.70E-01	7.86E-02	1.74E-02	2.93E-03	3.75E-04	3.65E-05
5	4.61E-01	4.49E-01	4.15E-01	3.64E-01	3.03E-01	2.39E-01	1.79E-01	1.28E-01	8.62E-02	5.52E-02
7.5	2.21E-01	2.18E-01	2.10E-01	1.97E-01	1.81E-01	1.61E-01	1.40E-01	1.19E-01	9.87E-02	7.97E-02
10	1.31E-01	1.30E-01	1.27E-01	1.23E-01	1.16E-01	1.09E-01	1.00E-01	9.08E-02	8.12E-02	7.15E-02

Off Axes NOBLE GAS Concentration (uCi/cc)
(miles)

mile	center line	0.1	0.2	0.3	0.4	0.5	0.6	0.7	0.8	0.9
0.5	6.17E-03	1.15E-03	7.56E-06	1.74E-09	1.39E-14	3.92E-21	3.87E-29	1.33E-38	0.00E+00	0.00E+00
1	1.84E-03	1.14E-03	2.70E-04	2.46E-05	8.59E-07	1.15E-08	5.91E-11	1.16E-13	8.79E-17	2.55E-20
2	5.29E-04	4.62E-04	3.06E-04	1.54E-04	5.91E-05	1.72E-05	3.81E-06	6.42E-07	8.22E-08	8.01E-09
5	1.01E-04	9.83E-05	9.09E-05	7.97E-05	6.64E-05	5.24E-05	3.93E-05	2.80E-05	1.89E-05	1.21E-05
7.5	4.84E-05	4.78E-05	4.60E-05	4.32E-05	3.96E-05	3.53E-05	3.07E-05	2.61E-05	2.16E-05	1.74E-05
10	2.87E-05	2.85E-05	2.79E-05	2.68E-05	2.55E-05	2.38E-05	2.19E-05	1.99E-05	1.78E-05	1.57E-05

Off Axes PARTICULATE Concentration (uCi/cc)
(miles)

mile	center line	0.1	0.2	0.3	0.4	0.5	0.6	0.7	0.8	0.9
0.5	4.42E-04	8.27E-05	5.42E-07	1.24E-10	9.99E-16	2.81E-22	2.77E-30	9.55E-40	0.00E+00	0.00E+00
1	1.32E-04	8.15E-05	1.93E-05	1.76E-06	6.15E-08	8.24E-10	4.23E-12	8.34E-15	6.30E-18	1.82E-21
2	3.79E-05	3.31E-05	2.19E-05	1.10E-05	4.23E-06	1.23E-06	2.73E-07	4.60E-08	5.89E-09	5.73E-10
5	7.23E-06	7.04E-06	6.51E-06	5.71E-06	4.75E-06	3.76E-06	2.82E-06	2.00E-06	1.35E-06	8.67E-07
7.5	3.47E-06	3.42E-06	3.29E-06	3.09E-06	2.83E-06	2.53E-06	2.20E-06	1.87E-06	1.55E-06	1.25E-06
10	2.06E-06	2.04E-06	2.00E-06	1.92E-06	1.82E-06	1.71E-06	1.57E-06	1.43E-06	1.27E-06	1.12E-06

Off Axes IODINE Concentration (uCi/cc)
(miles)

mile	center line	0.1	0.2	0.3	0.4	0.5	0.6	0.7	0.8	0.9
0.5	1.15E-07	2.15E-08	1.41E-10	3.24E-14	2.60E-19	7.31E-26	7.21E-34	2.48E-43	0.00E+00	0.00E+00
1	3.42E-08	2.12E-08	5.04E-09	4.59E-10	1.60E-11	2.15E-13	1.10E-15	2.17E-18	1.64E-21	4.75E-25
2	9.87E-09	8.61E-09	5.71E-09	2.88E-09	1.10E-09	3.21E-10	7.11E-11	1.20E-11	1.53E-12	1.49E-13
5	1.88E-09	1.83E-09	1.69E-09	1.49E-09	1.24E-09	9.77E-10	7.33E-10	5.21E-10	3.52E-10	2.26E-10
7.5	9.02E-10	8.91E-10	8.58E-10	8.05E-10	7.37E-10	6.58E-10	5.73E-10	4.87E-10	4.03E-10	3.25E-10
10	5.35E-10	5.31E-10	5.20E-10	5.00E-10	4.75E-10	4.44E-10	4.09E-10	3.71E-10	3.32E-10	2.92E-10

Off Axes Ground Deposition Measurements (cpm) for a Ludlum #44-40 Geiger Probe
(miles)

mile	center line	0.1	0.2	0.3	0.4	0.5	0.6	0.7	0.8	0.9
0.5	5.08E+06	9.51E+05	6.27E+03	4.23E+01	4.09E+01	4.09E+01	4.09E+01	4.09E+01	4.09E+01	4.09E+01
1	1.51E+06	9.37E+05	2.22E+05	2.03E+04	7.48E+02	5.04E+01	4.09E+01	4.09E+01	4.09E+01	4.09E+01
2	4.36E+05	3.80E+05	2.52E+05	1.27E+05	4.87E+04	1.42E+04	3.18E+03	5.70E+02	1.09E+02	4.75E+01
5	8.31E+04	8.10E+04	7.49E+04	6.57E+04	5.47E+04	4.32E+04	3.24E+04	2.31E+04	1.56E+04	1.00E+04
7.5	3.99E+04	3.94E+04	3.79E+04	3.56E+04	3.26E+04	2.91E+04	2.54E+04	2.15E+04	1.78E+04	1.44E+04
10	2.37E+04	2.35E+04	2.30E+04	2.21E+04	2.10E+04	1.96E+04	1.81E+04	1.64E+04	1.47E+04	1.29E+04

Off Axes Wipe Measurements (cpm) for a Ludlum #44-40 Geiger Probe
(miles)

mile	center line	0.1	0.2	0.3	0.4	0.5	0.6	0.7	0.8	0.9
0.5	1.92E+07	3.63E+06	7.21E+04	4.86E+04	4.86E+04	4.86E+04	4.86E+04	4.86E+04	4.86E+04	4.86E+04
1	5.75E+06	3.58E+06	8.88E+05	1.25E+05	5.13E+04	4.87E+04	4.86E+04	4.86E+04	4.86E+04	4.86E+04
2	1.69E+06	1.48E+06	9.99E+05	5.28E+05	2.32E+05	1.02E+05	6.05E+04	5.06E+04	4.89E+04	4.87E+04
5	3.62E+05	3.54E+05	3.31E+05	2.96E+05	2.55E+05	2.11E+05	1.71E+05	1.36E+05	1.07E+05	8.62E+04
7.5	1.99E+05	1.97E+05	1.92E+05	1.83E+05	1.72E+05	1.58E+05	1.44E+05	1.30E+05	1.16E+05	1.03E+05
10	1.38E+05	1.37E+05	1.35E+05	1.32E+05	1.28E+05	1.23E+05	1.17E+05	1.10E+05	1.04E+05	9.73E+04

Off Axes PARTICULATE Measurements (cpm) using a Ludlum #44-40 Probe for a 30 Cubic Foot Air Sample
(miles)

mile	center line	0.1	0.2	0.3	0.4	0.5	0.6	0.7	0.8	0.9
0.5	8.33E+07	1.56E+07	1.02E+05	2.34E+01	1.88E-04	5.30E-11	5.22E-19	1.80E-28	AS READ	AS READ
1	2.48E+07	1.54E+07	3.65E+06	3.32E+05	1.16E+04	1.55E+02	7.98E-01	1.57E-03	1.19E-06	3.44E-10
2	7.15E+06	6.24E+06	4.13E+06	2.08E+06	7.98E+05	2.33E+05	5.15E+04	8.68E+03	1.11E+03	1.08E+02
5	1.36E+06	1.33E+06	1.23E+06	1.08E+06	8.96E+05	7.08E+05	5.31E+05	3.78E+05	2.55E+05	1.63E+05
7.5	6.53E+05	6.45E+05	6.21E+05	5.83E+05	5.34E+05	4.77E+05	4.15E+05	3.53E+05	2.92E+05	2.36E+05
10	3.88E+05	3.85E+05	3.76E+05	3.63E+05	3.44E+05	3.22E+05	2.96E+05	2.69E+05	2.40E+05	2.11E+05

Off Axes IODINE Measurements (cpm) using a Ludlum #44-40 Probe for a 10 Cubic Foot Air Sample
(miles)

mile	center line	0.1	0.2	0.3	0.4	0.5	0.6	0.7	0.8	0.9
0.5	2.78E+07	5.20E+06	3.41E+04	7.81E+00	6.28E-05	1.77E-11	1.74E-19	6.01E-29	AS READ	AS READ
1	8.27E+06	5.12E+06	1.22E+06	1.11E+05	3.87E+03	5.18E+01	2.66E-01	5.24E-04	3.96E-07	1.15E-10
2	2.38E+06	2.08E+06	1.38E+06	6.95E+05	2.66E+05	7.75E+04	1.72E+04	2.89E+03	3.70E+02	3.60E+01
5	4.54E+05	4.43E+05	4.09E+05	3.59E+05	2.99E+05	2.36E+05	1.77E+05	1.26E+05	8.50E+04	5.45E+04
7.5	2.18E+05	2.15E+05	2.07E+05	1.94E+05	1.78E+05	1.59E+05	1.38E+05	1.18E+05	9.73E+04	7.86E+04
10	1.29E+05	1.28E+05	1.25E+05	1.21E+05	1.15E+05	1.07E+05	9.87E+04	8.96E+04	8.01E+04	7.05E+04

SCENARIO INFORMATION:

Simulated Time: 12:30
Interval Since Release Started (mins): 1:30

RELEASE IS FROM

Meteorological Inputs:

The ground level wind velocity: 7.0 mph
The ground level direction is from: 70.0 deg
Stability Class: C - Slightly Unstable

CALCULATED DOSES (mrem):

Distance (meters)	(miles)	Whole Body 5 cm Depth	Infant Thyroid
804.5	0.5	1.32E+03	2.65E+01
1609	1	3.94E+02	7.90E+00
3218	2	1.14E+02	2.28E+00
8045	5	2.17E+01	4.34E-01
12067.5	7.5	1.04E+01	2.08E-01
16090	10	6.16E+00	1.24E-01

Off Axes DEPOSITION (uCi/m2)
(miles)

mile	center line	0.1	0.2	0.3	0.4	0.5	0.6	0.7	0.8	0.9
0.5	1.34E+03	2.54E+02	5.03E+00	3.38E+00	3.38E+00	3.38E+00	3.38E+00	3.38E+00	3.38E+00	3.38E+00
1	4.02E+02	2.51E+02	6.21E+01	8.73E+00	3.57E+00	3.39E+00	3.38E+00	3.38E+00	3.38E+00	3.38E+00
2	1.18E+02	1.04E+02	6.99E+01	3.69E+01	1.62E+01	7.13E+00	4.21E+00	3.52E+00	3.40E+00	3.39E+00
5	2.53E+01	2.47E+01	2.31E+01	2.07E+01	1.78E+01	1.48E+01	1.19E+01	9.46E+00	7.49E+00	6.01E+00
7.5	1.39E+01	1.38E+01	1.34E+01	1.28E+01	1.20E+01	1.11E+01	1.01E+01	9.06E+00	8.08E+00	7.18E+00
10	9.62E+00	9.58E+00	9.44E+00	9.22E+00	8.92E+00	8.56E+00	8.15E+00	7.71E+00	7.25E+00	6.79E+00

Off Axes Six Inch Dose Rate (mR/hr)
(miles)

mile	center line	0.1	0.2	0.3	0.4	0.5	0.6	0.7	0.8	0.9
0.5	2.26E+02	4.28E+01	8.54E-01	5.77E-01	5.77E-01	5.77E-01	5.77E-01	5.77E-01	5.77E-01	5.77E-01
1	6.77E+01	4.22E+01	1.05E+01	1.48E+00	6.09E-01	5.78E-01	5.77E-01	5.77E-01	5.77E-01	5.77E-01
2	1.99E+01	1.75E+01	1.18E+01	6.22E+00	2.74E+00	1.21E+00	7.17E-01	6.01E-01	5.80E-01	5.77E-01
5	4.27E+00	4.17E+00	3.90E+00	3.49E+00	3.00E+00	2.49E+00	2.01E+00	1.60E+00	1.27E+00	1.02E+00
7.5	2.35E+00	2.32E+00	2.26E+00	2.16E+00	2.02E+00	1.87E+00	1.70E+00	1.53E+00	1.37E+00	1.22E+00
10	1.63E+00	1.62E+00	1.60E+00	1.56E+00	1.51E+00	1.45E+00	1.38E+00	1.30E+00	1.23E+00	1.15E+00

Off Axes WHOLE BODY Dose Rate (mrem/hr)
(miles)

mile	center line	0.1	0.2	0.3	0.4	0.5	0.6	0.7	0.8	0.9
0.5	1.71E+03	3.20E+02	2.10E+00	4.81E-04	3.87E-09	1.09E-15	1.07E-23	3.70E-33	0.00E+00	0.00E+00
1	5.10E+02	3.16E+02	7.49E+01	6.82E+00	2.38E-01	3.19E-03	1.64E-05	3.23E-08	2.44E-11	7.06E-15
2	1.47E+02	1.28E+02	8.49E+01	4.28E+01	1.64E+01	4.78E+00	1.06E+00	1.78E-01	2.28E-02	2.22E-03
5	2.80E+01	2.73E+01	2.52E+01	2.21E+01	1.84E+01	1.45E+01	1.09E+01	7.76E+00	5.24E+00	3.36E+00
7.5	1.34E+01	1.33E+01	1.28E+01	1.20E+01	1.10E+01	9.80E+00	8.53E+00	7.24E+00	6.00E+00	4.84E+00
10	7.96E+00	7.91E+00	7.73E+00	7.45E+00	7.07E+00	6.60E+00	6.08E+00	5.52E+00	4.93E+00	4.34E+00

Off Axes THYROID Dose Rate (mrem/hr)
(miles)

mile	center line	0.1	0.2	0.3	0.4	0.5	0.6	0.7	0.8	0.9
0.5	2.78E+01	5.20E+00	3.41E-02	7.82E-06	6.28E-11	1.77E-17	1.74E-25	6.01E-35	0.00E+00	0.00E+00
1	8.28E+00	5.13E+00	1.22E+00	1.11E-01	3.87E-03	5.19E-05	2.66E-07	5.25E-10	3.96E-13	1.15E-16
2	2.39E+00	2.08E+00	1.38E+00	6.95E-01	2.66E-01	7.76E-02	1.72E-02	2.90E-03	3.71E-04	3.61E-05
5	4.55E-01	4.43E-01	4.10E-01	3.59E-01	2.99E-01	2.36E-01	1.77E-01	1.26E-01	8.51E-02	5.45E-02
7.5	2.18E-01	2.15E-01	2.07E-01	1.95E-01	1.78E-01	1.59E-01	1.39E-01	1.18E-01	9.74E-02	7.86E-02
10	1.29E-01	1.28E-01	1.26E-01	1.21E-01	1.15E-01	1.07E-01	9.88E-02	8.97E-02	8.01E-02	7.06E-02

Off Axes NOBLE GAS Concentration (uCi/cc)
(miles)

mile	center line	0.1	0.2	0.3	0.4	0.5	0.6	0.7	0.8	0.9
0.5	6.53E-03	1.22E-03	8.01E-06	1.84E-09	1.48E-14	4.15E-21	4.09E-29	1.41E-38	0.00E+00	0.00E+00
1	1.95E-03	1.20E-03	2.86E-04	2.60E-05	9.10E-07	1.22E-08	6.26E-11	1.23E-13	9.31E-17	2.70E-20
2	5.61E-04	4.89E-04	3.24E-04	1.63E-04	6.26E-05	1.82E-05	4.04E-06	6.80E-07	8.71E-08	8.48E-09
5	1.07E-04	1.04E-04	9.62E-05	8.44E-05	7.03E-05	5.55E-05	4.16E-05	2.96E-05	2.00E-05	1.28E-05
7.5	5.12E-05	5.06E-05	4.87E-05	4.57E-05	4.19E-05	3.74E-05	3.26E-05	2.76E-05	2.29E-05	1.85E-05
10	3.04E-05	3.02E-05	2.95E-05	2.84E-05	2.70E-05	2.52E-05	2.32E-05	2.11E-05	1.88E-05	1.66E-05

Off Axes PARTICULATE Concentration (uCi/cc)
(miles)

mile	center line	0.1	0.2	0.3	0.4	0.5	0.6	0.7	0.8	0.9
0.5	4.47E-04	8.36E-05	5.48E-07	1.26E-10	1.01E-15	2.84E-22	2.80E-30	9.66E-40	0.00E+00	0.00E+00
1	1.33E-04	8.24E-05	1.96E-05	1.78E-06	6.22E-08	8.33E-10	4.28E-12	8.43E-15	6.36E-18	1.84E-21
2	3.83E-05	3.34E-05	2.22E-05	1.12E-05	4.28E-06	1.25E-06	2.76E-07	4.65E-08	5.95E-09	5.80E-10
5	7.30E-06	7.12E-06	6.58E-06	5.77E-06	4.80E-06	3.80E-06	2.85E-06	2.02E-06	1.37E-06	8.76E-07
7.5	3.50E-06	3.46E-06	3.33E-06	3.13E-06	2.86E-06	2.56E-06	2.23E-06	1.89E-06	1.56E-06	1.26E-06
10	2.08E-06	2.06E-06	2.02E-06	1.94E-06	1.84E-06	1.72E-06	1.59E-06	1.44E-06	1.29E-06	1.13E-06

Off Axes IODINE Concentration (uCi/cc)
(miles)

mile	center line	0.1	0.2	0.3	0.4	0.5	0.6	0.7	0.8	0.9
0.5	1.14E-07	2.13E-08	1.39E-10	3.20E-14	2.57E-19	7.23E-26	7.13E-34	2.47E-43	0.00E+00	0.00E+00
1	3.39E-08	2.10E-08	4.98E-09	4.53E-10	1.58E-11	2.12E-13	1.09E-15	2.15E-18	1.62E-21	4.69E-25
2	9.76E-09	8.51E-09	5.64E-09	2.84E-09	1.09E-09	3.17E-10	7.03E-11	1.18E-11	1.52E-12	1.48E-13
5	1.86E-09	1.81E-09	1.67E-09	1.47E-09	1.22E-09	9.66E-10	7.25E-10	5.16E-10	3.48E-10	2.23E-10
7.5	8.92E-10	8.81E-10	8.48E-10	7.96E-10	7.29E-10	6.51E-10	5.67E-10	4.81E-10	3.98E-10	3.22E-10
10	5.29E-10	5.25E-10	5.14E-10	4.95E-10	4.70E-10	4.39E-10	4.04E-10	3.67E-10	3.28E-10	2.89E-10

Off Axes Ground Deposition Measurements (cpm) for a Ludlum #44-40 Geiger Probe
(miles)

mile	center line	0.1	0.2	0.3	0.4	0.5	0.6	0.7	0.8	0.9
0.5	5.15E+06	9.63E+05	6.34E+03	3.50E+01	3.36E+01	3.36E+01	3.36E+01	3.36E+01	3.36E+01	3.36E+01
1	1.53E+06	9.49E+05	2.25E+05	2.06E+04	7.50E+02	4.32E+01	3.36E+01	3.36E+01	3.36E+01	3.36E+01
2	4.42E+05	3.85E+05	2.55E+05	1.29E+05	4.93E+04	1.44E+04	3.22E+03	5.69E+02	1.02E+02	4.02E+01
5	8.42E+04	8.20E+04	7.58E+04	6.65E+04	5.54E+04	4.38E+04	3.28E+04	2.34E+04	1.58E+04	1.01E+04
7.5	4.04E+04	3.99E+04	3.84E+04	3.61E+04	3.30E+04	2.95E+04	2.57E+04	2.18E+04	1.81E+04	1.46E+04
10	2.40E+04	2.38E+04	2.33E+04	2.24E+04	2.13E+04	1.99E+04	1.83E+04	1.66E+04	1.49E+04	1.31E+04

Simulated Time: 12:30

Off Axes Wipe Measurements (cpm) for a Ludlum #44-40 Geiger Probe
(miles)

mile	center line	0.1	0.2	0.3	0.4	0.5	0.6	0.7	0.8	0.9
0.5	1.94E+07	3.67E+06	7.27E+04	4.89E+04	4.89E+04	4.89E+04	4.89E+04	4.89E+04	4.89E+04	4.89E+04
1	5.82E+06	3.62E+06	8.97E+05	1.26E+05	5.16E+04	4.89E+04	4.89E+04	4.89E+04	4.89E+04	4.89E+04
2	1.71E+06	1.50E+06	1.01E+06	5.33E+05	2.35E+05	1.03E+05	6.09E+04	5.09E+04	4.92E+04	4.89E+04
5	3.66E+05	3.58E+05	3.34E+05	2.99E+05	2.57E+05	2.14E+05	1.72E+05	1.37E+05	1.08E+05	8.69E+04
7.5	2.01E+05	1.99E+05	1.93E+05	1.85E+05	1.73E+05	1.60E+05	1.45E+05	1.31E+05	1.17E+05	1.04E+05
10	1.39E+05	1.38E+05	1.36E+05	1.33E+05	1.29E+05	1.24E+05	1.18E+05	1.11E+05	1.05E+05	9.81E+04

Off Axes PARTICULATE Measurements (cpm) using a Ludlum #44-40 Probe for a 30 Cubic Foot Air Sample
(miles)

mile	center line	0.1	0.2	0.3	0.4	0.5	0.6	0.7	0.8	0.9
0.5	8.42E+07	1.58E+07	1.03E+05	2.37E+01	1.90E-04	5.36E-11	5.28E-19	1.82E-28	AS READ	AS READ
1	2.51E+07	1.55E+07	3.69E+06	3.36E+05	1.17E+04	1.57E+02	8.07E-01	1.59E-03	1.20E-06	3.48E-10
2	7.23E+06	6.30E+06	4.18E+06	2.11E+06	8.07E+05	2.35E+05	5.21E+04	8.77E+03	1.12E+03	1.09E+02
5	1.38E+06	1.34E+06	1.24E+06	1.09E+06	9.06E+05	7.16E+05	5.37E+05	3.82E+05	2.58E+05	1.65E+05
7.5	6.61E+05	6.52E+05	6.28E+05	5.90E+05	5.40E+05	4.82E+05	4.20E+05	3.56E+05	2.95E+05	2.38E+05
10	3.92E+05	3.89E+05	3.80E+05	3.66E+05	3.48E+05	3.25E+05	2.99E+05	2.72E+05	2.43E+05	2.14E+05

Off Axes IODINE Measurements (cpm) using a Ludlum #44-40 Probe for a 10 Cubic Foot Air Sample
(miles)

mile	center line	0.1	0.2	0.3	0.4	0.5	0.6	0.7	0.8	0.9
0.5	2.81E+07	5.25E+06	3.44E+04	7.90E+00	6.35E-05	1.79E-11	1.76E-19	6.07E-29	AS READ	AS READ
1	8.36E+06	5.18E+06	1.23E+06	1.12E+05	3.91E+03	5.24E+01	2.69E-01	5.30E-04	4.00E-07	1.16E-10
2	2.41E+06	2.10E+06	1.39E+06	7.02E+05	2.69E+05	7.84E+04	1.74E+04	2.92E+03	3.74E+02	3.64E+01
5	4.59E+05	4.47E+05	4.14E+05	3.63E+05	3.02E+05	2.39E+05	1.79E+05	1.27E+05	8.59E+04	5.51E+04
7.5	2.20E+05	2.17E+05	2.09E+05	1.97E+05	1.80E+05	1.61E+05	1.40E+05	1.19E+05	9.84E+04	7.94E+04
10	1.31E+05	1.30E+05	1.27E+05	1.22E+05	1.16E+05	1.08E+05	9.98E+04	9.05E+04	8.09E+04	7.13E+04

SCENARIO INFORMATION:

Simulated Time: 12:45
Interval Since Release Started (mins): 1:45

RELEASE IS FROM

Meteorological Inputs:

The ground level wind velocity: 7.0 mph
The ground level direction is from: 70.0 deg
Stability Class: C - Slightly Unstable

CALCULATED DOSES (mrem):

Distance (meters)	(miles)	Whole Body 5 cm Depth	Infant Thyroid
804.5	0.5	1.76E+03	3.35E+01
1609	1	5.23E+02	9.97E+00
3218	2	1.51E+02	2.87E+00
8045	5	2.88E+01	5.48E-01
12067.5	7.5	1.38E+01	2.63E-01
16090	10	8.18E+00	1.56E-01

Off Axes DEPOSITION (uCi/m2)
(miles)

mile	center line	0.1	0.2	0.3	0.4	0.5	0.6	0.7	0.8	0.9
0.5	1.37E+03	2.59E+02	5.12E+00	3.44E+00	3.44E+00	3.44E+00	3.44E+00	3.44E+00	3.44E+00	3.44E+00
1	4.10E+02	2.55E+02	6.33E+01	8.90E+00	3.63E+00	3.45E+00	3.44E+00	3.44E+00	3.44E+00	3.44E+00
2	1.21E+02	1.06E+02	7.13E+01	3.76E+01	1.65E+01	7.26E+00	4.29E+00	3.59E+00	3.46E+00	3.45E+00
5	2.58E+01	2.52E+01	2.36E+01	2.11E+01	1.81E+01	1.51E+01	1.22E+01	9.64E+00	7.63E+00	6.13E+00
7.5	1.42E+01	1.40E+01	1.36E+01	1.30E+01	1.22E+01	1.13E+01	1.03E+01	9.23E+00	8.23E+00	7.31E+00
10	9.81E+00	9.76E+00	9.62E+00	9.39E+00	9.09E+00	8.72E+00	8.30E+00	7.85E+00	7.38E+00	6.91E+00

Off Axes Six Inch Dose Rate (mR/hr)
(miles)

mile	center line	0.1	0.2	0.3	0.4	0.5	0.6	0.7	0.8	0.9
0.5	2.25E+02	4.25E+01	8.43E-01	5.69E-01	5.69E-01	5.69E-01	5.69E-01	5.69E-01	5.69E-01	5.69E-01
1	6.73E+01	4.19E+01	1.04E+01	1.46E+00	6.00E-01	5.69E-01	5.69E-01	5.69E-01	5.69E-01	5.69E-01
2	1.98E+01	1.73E+01	1.17E+01	6.17E+00	2.72E+00	1.19E+00	7.07E-01	5.92E-01	5.72E-01	5.69E-01
5	4.23E+00	4.14E+00	3.87E+00	3.46E+00	2.98E+00	2.47E+00	2.00E+00	1.58E+00	1.25E+00	1.01E+00
7.5	2.33E+00	2.30E+00	2.24E+00	2.14E+00	2.00E+00	1.85E+00	1.69E+00	1.52E+00	1.35E+00	1.20E+00
10	1.61E+00	1.60E+00	1.58E+00	1.54E+00	1.49E+00	1.43E+00	1.36E+00	1.29E+00	1.21E+00	1.14E+00

Off Axes WHOLE BODY Dose Rate (mrem/hr)
(miles)

mile	center line	0.1	0.2	0.3	0.4	0.5	0.6	0.7	0.8	0.9
0.5	1.75E+03	3.27E+02	2.14E+00	4.92E-04	3.95E-09	1.11E-15	1.09E-23	3.78E-33	0.00E+00	0.00E+00
1	5.20E+02	3.22E+02	7.65E+01	6.97E+00	2.43E-01	3.26E-03	1.67E-05	3.30E-08	2.49E-11	7.21E-15
2	1.50E+02	1.31E+02	8.67E+01	4.37E+01	1.67E+01	4.88E+00	1.08E+00	1.82E-01	2.33E-02	2.27E-03
5	2.86E+01	2.78E+01	2.57E+01	2.26E+01	1.88E+01	1.48E+01	1.11E+01	7.92E+00	5.35E+00	3.43E+00
7.5	1.37E+01	1.35E+01	1.30E+01	1.22E+01	1.12E+01	1.00E+01	8.71E+00	7.39E+00	6.12E+00	4.94E+00
10	8.13E+00	8.07E+00	7.89E+00	7.60E+00	7.21E+00	6.74E+00	6.21E+00	5.63E+00	5.04E+00	4.43E+00

Simulated Time: 12:45

Offsite
Offsite Data

Off Axes THYROID Dose Rate (mrem/hr)
(miles)

mile	center line	0.1	0.2	0.3	0.4	0.5	0.6	0.7	0.8	0.9
0.5	2.78E+01	5.19E+00	3.40E-02	7.81E-06	6.27E-11	1.77E-17	1.74E-25	6.00E-35	0.00E+00	0.00E+00
1	8.27E+00	5.12E+00	1.22E+00	1.11E-01	3.87E-03	5.18E-05	2.66E-07	5.24E-10	3.96E-13	1.15E-16
2	2.38E+00	2.08E+00	1.38E+00	6.94E-01	2.66E-01	7.75E-02	1.72E-02	2.89E-03	3.70E-04	3.60E-05
5	4.54E-01	4.42E-01	4.09E-01	3.59E-01	2.99E-01	2.36E-01	1.77E-01	1.26E-01	8.50E-02	5.44E-02
7.5	2.18E-01	2.15E-01	2.07E-01	1.94E-01	1.78E-01	1.59E-01	1.38E-01	1.17E-01	9.73E-02	7.85E-02
10	1.29E-01	1.28E-01	1.25E-01	1.21E-01	1.15E-01	1.07E-01	9.87E-02	8.95E-02	8.00E-02	7.05E-02

Off Axes NOBLE GAS Concentration (uCi/cc)
(miles)

mile	center line	0.1	0.2	0.3	0.4	0.5	0.6	0.7	0.8	0.9
0.5	6.90E-03	1.29E-03	8.46E-06	1.94E-09	1.56E-14	4.39E-21	4.32E-29	1.49E-38	0.00E+00	0.00E+00
1	2.05E-03	1.27E-03	3.02E-04	2.75E-05	9.61E-07	1.29E-08	6.61E-11	1.30E-13	9.83E-17	2.85E-20
2	5.92E-04	5.16E-04	3.42E-04	1.73E-04	6.61E-05	1.93E-05	4.27E-06	7.19E-07	9.20E-08	8.95E-09
5	1.13E-04	1.10E-04	1.02E-04	8.92E-05	7.42E-05	5.86E-05	4.40E-05	3.13E-05	2.11E-05	1.35E-05
7.5	5.41E-05	5.34E-05	5.15E-05	4.83E-05	4.42E-05	3.95E-05	3.44E-05	2.92E-05	2.42E-05	1.95E-05
10	3.21E-05	3.19E-05	3.12E-05	3.00E-05	2.85E-05	2.66E-05	2.45E-05	2.23E-05	1.99E-05	1.75E-05

Off Axes PARTICULATE Concentration (uCi/cc)
(miles)

mile	center line	0.1	0.2	0.3	0.4	0.5	0.6	0.7	0.8	0.9
0.5	4.55E-04	8.52E-05	5.58E-07	1.28E-10	1.03E-15	2.90E-22	2.85E-30	9.85E-40	0.00E+00	0.00E+00
1	1.36E-04	8.40E-05	1.99E-05	1.82E-06	6.34E-08	8.50E-10	4.36E-12	8.59E-15	6.49E-18	1.88E-21
2	3.91E-05	3.41E-05	2.26E-05	1.14E-05	4.36E-06	1.27E-06	2.82E-07	4.74E-08	6.07E-09	5.91E-10
5	7.45E-06	7.26E-06	6.71E-06	5.89E-06	4.90E-06	3.87E-06	2.90E-06	2.07E-06	1.39E-06	8.93E-07
7.5	3.57E-06	3.53E-06	3.40E-06	3.19E-06	2.92E-06	2.61E-06	2.27E-06	1.93E-06	1.60E-06	1.29E-06
10	2.12E-06	2.10E-06	2.06E-06	1.98E-06	1.88E-06	1.76E-06	1.62E-06	1.47E-06	1.31E-06	1.16E-06

Off Axes IODINE Concentration (uCi/cc)
(miles)

mile	center line	0.1	0.2	0.3	0.4	0.5	0.6	0.7	0.8	0.9
0.5	1.14E-07	2.12E-08	1.39E-10	3.19E-14	2.57E-19	7.22E-26	7.12E-34	2.47E-43	0.00E+00	0.00E+00
1	3.38E-08	2.09E-08	4.97E-09	4.53E-10	1.58E-11	2.12E-13	1.09E-15	2.14E-18	1.62E-21	4.69E-25
2	9.75E-09	8.50E-09	5.63E-09	2.84E-09	1.09E-09	3.17E-10	7.02E-11	1.18E-11	1.51E-12	1.47E-13
5	1.86E-09	1.81E-09	1.67E-09	1.47E-09	1.22E-09	9.65E-10	7.24E-10	5.15E-10	3.48E-10	2.23E-10
7.5	8.91E-10	8.79E-10	8.47E-10	7.95E-10	7.28E-10	6.50E-10	5.66E-10	4.81E-10	3.98E-10	3.21E-10
10	5.29E-10	5.25E-10	5.13E-10	4.94E-10	4.69E-10	4.38E-10	4.04E-10	3.66E-10	3.27E-10	2.88E-10

Off Axes Ground Deposition Measurements (cpm) for a Ludlum #44-40 Geiger Probe
(miles)

mile	center line	0.1	0.2	0.3	0.4	0.5	0.6	0.7	0.8	0.9
0.5	5.25E+06	9.83E+05	6.47E+03	3.16E+01	3.01E+01	3.01E+01	3.01E+01	3.01E+01	3.01E+01	3.01E+01
1	1.56E+06	9.69E+05	2.30E+05	2.10E+04	7.62E+02	3.99E+01	3.02E+01	3.01E+01	3.01E+01	3.01E+01
2	4.51E+05	3.93E+05	2.61E+05	1.31E+05	5.04E+04	1.47E+04	3.28E+03	5.77E+02	1.00E+02	3.69E+01
5	8.59E+04	8.37E+04	7.74E+04	6.79E+04	5.65E+04	4.47E+04	3.35E+04	2.38E+04	1.61E+04	1.03E+04
7.5	4.12E+04	4.07E+04	3.92E+04	3.68E+04	3.37E+04	3.01E+04	2.62E+04	2.23E+04	1.84E+04	1.49E+04
10	2.45E+04	2.43E+04	2.38E+04	2.29E+04	2.17E+04	2.03E+04	1.87E+04	1.70E+04	1.52E+04	1.34E+04

Off Axes Wipe Measurements (cpm) for a Ludlum #44-40 Geiger Probe
(miles)

mile	center line	0.1	0.2	0.3	0.4	0.5	0.6	0.7	0.8	0.9
0.5	1.98E+07	3.75E+06	7.40E+04	4.98E+04	4.98E+04	4.98E+04	4.98E+04	4.98E+04	4.98E+04	4.98E+04
1	5.93E+06	3.69E+06	9.15E+05	1.29E+05	5.25E+04	4.98E+04	4.98E+04	4.98E+04	4.98E+04	4.98E+04
2	1.75E+06	1.53E+06	1.03E+06	5.44E+05	2.39E+05	1.05E+05	6.20E+04	5.18E+04	5.00E+04	4.98E+04
5	3.73E+05	3.65E+05	3.41E+05	3.05E+05	2.62E+05	2.18E+05	1.76E+05	1.39E+05	1.10E+05	8.85E+04
7.5	2.05E+05	2.03E+05	1.97E+05	1.88E+05	1.76E+05	1.63E+05	1.48E+05	1.33E+05	1.19E+05	1.06E+05
10	1.42E+05	1.41E+05	1.39E+05	1.36E+05	1.31E+05	1.26E+05	1.20E+05	1.13E+05	1.07E+05	9.99E+04

Off Axes PARTICULATE Measurements (cpm) using a Ludlum #44-40 Probe for a 30 Cubic Foot Air Sample
(miles)

mile	center line	0.1	0.2	0.3	0.4	0.5	0.6	0.7	0.8	0.9
0.5	8.59E+07	1.61E+07	1.05E+05	2.42E+01	1.94E-04	5.46E-11	5.38E-19	1.86E-28	AS READ	AS READ
1	2.56E+07	1.58E+07	3.76E+06	3.43E+05	1.20E+04	1.60E+02	8.23E-01	1.62E-03	1.22E-06	3.55E-10
2	7.37E+06	6.43E+06	4.26E+06	2.15E+06	8.23E+05	2.40E+05	5.31E+04	8.95E+03	1.15E+03	1.11E+02
5	1.41E+06	1.37E+06	1.27E+06	1.11E+06	9.24E+05	7.30E+05	5.47E+05	3.89E+05	2.63E+05	1.68E+05
7.5	6.74E+05	6.65E+05	6.41E+05	6.02E+05	5.51E+05	4.92E+05	4.28E+05	3.64E+05	3.01E+05	2.43E+05
10	4.00E+05	3.97E+05	3.88E+05	3.74E+05	3.55E+05	3.32E+05	3.05E+05	2.77E+05	2.48E+05	2.18E+05

Off Axes IODINE Measurements (cpm) using a Ludlum #44-40 Probe for a 10 Cubic Foot Air Sample
(miles)

mile	center line	0.1	0.2	0.3	0.4	0.5	0.6	0.7	0.8	0.9
0.5	2.86E+07	5.36E+06	3.51E+04	8.06E+00	6.47E-05	1.82E-11	1.79E-19	6.19E-29	AS READ	AS READ
1	8.53E+06	5.28E+06	1.25E+06	1.14E+05	3.99E+03	5.34E+01	2.74E-01	5.40E-04	4.08E-07	1.18E-10
2	2.46E+06	2.14E+06	1.42E+06	7.16E+05	2.74E+05	7.99E+04	1.77E+04	2.98E+03	3.82E+02	3.72E+01
5	4.68E+05	4.56E+05	4.22E+05	3.70E+05	3.08E+05	2.43E+05	1.82E+05	1.30E+05	8.76E+04	5.62E+04
7.5	2.25E+05	2.22E+05	2.14E+05	2.01E+05	1.84E+05	1.64E+05	1.43E+05	1.21E+05	1.00E+05	8.10E+04
10	1.33E+05	1.32E+05	1.29E+05	1.25E+05	1.18E+05	1.11E+05	1.02E+05	9.24E+04	8.25E+04	7.27E+04

SCENARIO INFORMATION:

Simulated Time: 13:00
Interval Since Release Started (mins): 2:00

RELEASE IS FROM

Meteorological Inputs:

The ground level wind velocity: 7.0 mph
The ground level direction is from: 70.0 deg
Stability Class: C - Slightly Unstable

CALCULATED DOSES (mrem):

Distance (meters)	(miles)	Whole Body 5 cm Depth	Infant Thyroid
804.5	0.5	2.20E+03	4.04E+01
1609	1	6.56E+02	1.20E+01
3218	2	1.89E+02	3.47E+00
8045	5	3.60E+01	6.61E-01
12067.5	7.5	1.73E+01	3.17E-01
16090	10	1.02E+01	1.88E-01

Off Axes DEPOSITION (uCi/m2)
(miles)

mile	center line	0.1	0.2	0.3	0.4	0.5	0.6	0.7	0.8	0.9
0.5	1.40E+03	2.65E+02	5.24E+00	3.52E+00	3.52E+00	3.52E+00	3.52E+00	3.52E+00	3.52E+00	3.52E+00
1	4.20E+02	2.61E+02	6.47E+01	9.10E+00	3.72E+00	3.52E+00	3.52E+00	3.52E+00	3.52E+00	3.52E+00
2	1.24E+02	1.08E+02	7.29E+01	3.85E+01	1.69E+01	7.42E+00	4.39E+00	3.67E+00	3.54E+00	3.52E+00
5	2.64E+01	2.58E+01	2.41E+01	2.16E+01	1.86E+01	1.54E+01	1.24E+01	9.86E+00	7.80E+00	6.26E+00
7.5	1.45E+01	1.43E+01	1.39E+01	1.33E+01	1.25E+01	1.15E+01	1.05E+01	9.44E+00	8.42E+00	7.48E+00
10	1.00E+01	9.98E+00	9.84E+00	9.60E+00	9.29E+00	8.92E+00	8.49E+00	8.03E+00	7.55E+00	7.07E+00

Off Axes Six Inch Dose Rate (mR/hr)
(miles)

mile	center line	0.1	0.2	0.3	0.4	0.5	0.6	0.7	0.8	0.9
0.5	2.26E+02	4.28E+01	8.47E-01	5.71E-01	5.71E-01	5.71E-01	5.71E-01	5.71E-01	5.71E-01	5.71E-01
1	6.77E+01	4.22E+01	1.04E+01	1.47E+00	6.02E-01	5.71E-01	5.71E-01	5.71E-01	5.71E-01	5.71E-01
2	1.99E+01	1.75E+01	1.18E+01	6.21E+00	2.73E+00	1.20E+00	7.10E-01	5.94E-01	5.74E-01	5.71E-01
5	4.26E+00	4.16E+00	3.89E+00	3.49E+00	3.00E+00	2.49E+00	2.01E+00	1.59E+00	1.26E+00	1.01E+00
7.5	2.34E+00	2.32E+00	2.25E+00	2.15E+00	2.02E+00	1.86E+00	1.70E+00	1.53E+00	1.36E+00	1.21E+00
10	1.62E+00	1.61E+00	1.59E+00	1.55E+00	1.50E+00	1.44E+00	1.37E+00	1.30E+00	1.22E+00	1.14E+00

Off Axes WHOLE BODY Dose Rate (mrem/hr)
(miles)

mile	center line	0.1	0.2	0.3	0.4	0.5	0.6	0.7	0.8	0.9
0.5	1.79E+03	3.35E+02	2.19E+00	5.03E-04	4.04E-09	1.14E-15	1.12E-23	3.87E-33	0.00E+00	0.00E+00
1	5.32E+02	3.30E+02	7.83E+01	7.13E+00	2.49E-01	3.34E-03	1.71E-05	3.37E-08	2.55E-11	7.38E-15
2	1.53E+02	1.34E+02	8.87E+01	4.47E+01	1.71E+01	4.99E+00	1.11E+00	1.86E-01	2.38E-02	2.32E-03
5	2.92E+01	2.85E+01	2.63E+01	2.31E+01	1.92E+01	1.52E+01	1.14E+01	8.11E+00	5.47E+00	3.51E+00
7.5	1.40E+01	1.38E+01	1.33E+01	1.25E+01	1.15E+01	1.02E+01	8.91E+00	7.57E+00	6.26E+00	5.06E+00
10	8.32E+00	8.26E+00	8.08E+00	7.78E+00	7.38E+00	6.90E+00	6.36E+00	5.77E+00	5.15E+00	4.54E+00

Off Axes THYROID Dose Rate (mrem/hr)
(miles)

mile	center line	0.1	0.2	0.3	0.4	0.5	0.6	0.7	0.8	0.9
0.5	2.77E+01	5.19E+00	3.40E-02	7.81E-06	6.27E-11	1.77E-17	1.74E-25	6.00E-35	0.00E+00	0.00E+00
1	8.26E+00	5.12E+00	1.22E+00	1.11E-01	3.87E-03	5.18E-05	2.66E-07	5.24E-10	3.95E-13	1.15E-16
2	2.38E+00	2.08E+00	1.38E+00	6.94E-01	2.66E-01	7.75E-02	1.72E-02	2.89E-03	3.70E-04	3.60E-05
5	4.54E-01	4.42E-01	4.09E-01	3.59E-01	2.99E-01	2.36E-01	1.77E-01	1.26E-01	8.49E-02	5.44E-02
7.5	2.18E-01	2.15E-01	2.07E-01	1.94E-01	1.78E-01	1.59E-01	1.38E-01	1.17E-01	9.72E-02	7.85E-02
10	1.29E-01	1.28E-01	1.25E-01	1.21E-01	1.15E-01	1.07E-01	9.87E-02	8.95E-02	8.00E-02	7.04E-02

Off Axes NOBLE GAS Concentration (uCi/cc)
(miles)

mile	center line	0.1	0.2	0.3	0.4	0.5	0.6	0.7	0.8	0.9
0.5	7.27E-03	1.36E-03	8.91E-06	2.04E-09	1.64E-14	4.62E-21	4.55E-29	1.57E-38	0.00E+00	0.00E+00
1	2.16E-03	1.34E-03	3.18E-04	2.90E-05	1.01E-06	1.36E-08	6.96E-11	1.37E-13	1.04E-16	3.00E-20
2	6.24E-04	5.44E-04	3.61E-04	1.82E-04	6.96E-05	2.03E-05	4.49E-06	7.57E-07	9.69E-08	9.43E-09
5	1.19E-04	1.16E-04	1.07E-04	9.39E-05	7.82E-05	6.18E-05	4.63E-05	3.29E-05	2.22E-05	1.43E-05
7.5	5.70E-05	5.63E-05	5.42E-05	5.09E-05	4.66E-05	4.16E-05	3.62E-05	3.08E-05	2.55E-05	2.06E-05
10	3.38E-05	3.36E-05	3.28E-05	3.16E-05	3.00E-05	2.80E-05	2.58E-05	2.34E-05	2.09E-05	1.84E-05

Off Axes PARTICULATE Concentration (uCi/cc)
(miles)

mile	center line	0.1	0.2	0.3	0.4	0.5	0.6	0.7	0.8	0.9
0.5	4.66E-04	8.72E-05	5.71E-07	1.31E-10	1.05E-15	2.96E-22	2.92E-30	1.01E-39	0.00E+00	0.00E+00
1	1.39E-04	8.59E-05	2.04E-05	1.86E-06	6.49E-08	8.69E-10	4.46E-12	8.79E-15	6.64E-18	1.92E-21
2	4.00E-05	3.49E-05	2.31E-05	1.17E-05	4.46E-06	1.30E-06	2.88E-07	4.85E-08	6.21E-09	6.05E-10
5	7.62E-06	7.42E-06	6.86E-06	6.02E-06	5.01E-06	3.96E-06	2.97E-06	2.11E-06	1.43E-06	9.14E-07
7.5	3.65E-06	3.61E-06	3.47E-06	3.26E-06	2.99E-06	2.67E-06	2.32E-06	1.97E-06	1.63E-06	1.32E-06
10	2.17E-06	2.15E-06	2.10E-06	2.03E-06	1.92E-06	1.80E-06	1.66E-06	1.50E-06	1.34E-06	1.18E-06

Off Axes IODINE Concentration (uCi/cc)
(miles)

mile	center line	0.1	0.2	0.3	0.4	0.5	0.6	0.7	0.8	0.9
0.5	1.14E-07	2.12E-08	1.39E-10	3.19E-14	2.57E-19	7.22E-26	7.12E-34	2.47E-43	0.00E+00	0.00E+00
1	3.38E-08	2.09E-08	4.97E-09	4.53E-10	1.58E-11	2.12E-13	1.09E-15	2.14E-18	1.62E-21	4.69E-25
2	9.75E-09	8.50E-09	5.63E-09	2.84E-09	1.09E-09	3.17E-10	7.02E-11	1.18E-11	1.51E-12	1.47E-13
5	1.86E-09	1.81E-09	1.67E-09	1.47E-09	1.22E-09	9.65E-10	7.23E-10	5.15E-10	3.48E-10	2.23E-10
7.5	8.90E-10	8.79E-10	8.47E-10	7.95E-10	7.28E-10	6.50E-10	5.66E-10	4.81E-10	3.98E-10	3.21E-10
10	5.29E-10	5.25E-10	5.13E-10	4.94E-10	4.69E-10	4.38E-10	4.04E-10	3.66E-10	3.27E-10	2.88E-10

Off Axes Ground Deposition Measurements (cpm) for a Ludlum #44-40 Geiger Probe
(miles)

mile	center line	0.1	0.2	0.3	0.4	0.5	0.6	0.7	0.8	0.9
0.5	5.37E+06	1.01E+06	6.62E+03	3.00E+01	2.85E+01	2.85E+01	2.85E+01	2.85E+01	2.85E+01	2.85E+01
1	1.60E+06	9.91E+05	2.35E+05	2.15E+04	7.77E+02	3.85E+01	2.85E+01	2.85E+01	2.85E+01	2.85E+01
2	4.61E+05	4.02E+05	2.67E+05	1.34E+05	5.15E+04	1.50E+04	3.35E+03	5.88E+02	1.00E+02	3.55E+01
5	8.79E+04	8.57E+04	7.92E+04	6.95E+04	5.79E+04	4.57E+04	3.43E+04	2.44E+04	1.65E+04	1.06E+04
7.5	4.22E+04	4.17E+04	4.01E+04	3.77E+04	3.45E+04	3.08E+04	2.68E+04	2.28E+04	1.89E+04	1.52E+04
10	2.50E+04	2.49E+04	2.43E+04	2.34E+04	2.22E+04	2.08E+04	1.91E+04	1.74E+04	1.55E+04	1.37E+04

Off Axes Wipe Measurements (cpm) for a Ludlum #44-40 Geiger Probe
(miles)

mile	center line	0.1	0.2	0.3	0.4	0.5	0.6	0.7	0.8	0.9
0.5	2.03E+07	3.83E+06	7.57E+04	5.09E+04	5.09E+04	5.09E+04	5.09E+04	5.09E+04	5.09E+04	5.09E+04
1	6.07E+06	3.78E+06	9.36E+05	1.31E+05	5.37E+04	5.09E+04	5.09E+04	5.09E+04	5.09E+04	5.09E+04
2	1.79E+06	1.56E+06	1.05E+06	5.56E+05	2.44E+05	1.07E+05	6.34E+04	5.30E+04	5.12E+04	5.09E+04
5	3.81E+05	3.73E+05	3.48E+05	3.12E+05	2.68E+05	2.23E+05	1.80E+05	1.42E+05	1.13E+05	9.05E+04
7.5	2.09E+05	2.07E+05	2.02E+05	1.92E+05	1.80E+05	1.67E+05	1.52E+05	1.36E+05	1.22E+05	1.08E+05
10	1.45E+05	1.44E+05	1.42E+05	1.39E+05	1.34E+05	1.29E+05	1.23E+05	1.16E+05	1.09E+05	1.02E+05

Off Axes PARTICULATE Measurements (cpm) using a Ludlum #44-40 Probe for a 30 Cubic Foot Air Sample
(miles)

mile	center line	0.1	0.2	0.3	0.4	0.5	0.6	0.7	0.8	0.9
0.5	8.78E+07	1.64E+07	1.08E+05	2.47E+01	1.99E-04	5.59E-11	5.51E-19	1.90E-28	AS READ	AS READ
1	2.62E+07	1.62E+07	3.85E+06	3.50E+05	1.22E+04	1.64E+02	8.42E-01	1.66E-03	1.25E-06	3.63E-10
2	7.54E+06	6.58E+06	4.36E+06	2.20E+06	8.42E+05	2.45E+05	5.43E+04	9.15E+03	1.17E+03	1.14E+02
5	1.44E+06	1.40E+06	1.29E+06	1.14E+06	9.45E+05	7.47E+05	5.60E+05	3.98E+05	2.69E+05	1.72E+05
7.5	6.89E+05	6.80E+05	6.55E+05	6.15E+05	5.63E+05	5.03E+05	4.38E+05	3.72E+05	3.08E+05	2.49E+05
10	4.09E+05	4.06E+05	3.97E+05	3.82E+05	3.63E+05	3.39E+05	3.12E+05	2.83E+05	2.53E+05	2.23E+05

Off Axes IODINE Measurements (cpm) using a Ludlum #44-40 Probe for a 10 Cubic Foot Air Sample
(miles)

mile	center line	0.1	0.2	0.3	0.4	0.5	0.6	0.7	0.8	0.9
0.5	2.93E+07	5.48E+06	3.59E+04	8.24E+00	6.62E-05	1.86E-11	1.84E-19	6.33E-29	AS READ	AS READ
1	8.72E+06	5.40E+06	1.28E+06	1.17E+05	4.08E+03	5.46E+01	2.81E-01	5.53E-04	4.17E-07	1.21E-10
2	2.51E+06	2.19E+06	1.45E+06	7.32E+05	2.81E+05	8.18E+04	1.81E+04	3.05E+03	3.90E+02	3.80E+01
5	4.79E+05	4.67E+05	4.31E+05	3.78E+05	3.15E+05	2.49E+05	1.87E+05	1.33E+05	8.96E+04	5.74E+04
7.5	2.30E+05	2.27E+05	2.18E+05	2.05E+05	1.88E+05	1.68E+05	1.46E+05	1.24E+05	1.03E+05	8.28E+04
10	1.36E+05	1.35E+05	1.32E+05	1.27E+05	1.21E+05	1.13E+05	1.04E+05	9.45E+04	8.44E+04	7.43E+04

SCENARIO INFORMATION:

Simulated Time: 13:15
Interval Since Release Started (mins): 2:10

RELEASE IS FROM

Meteorological Inputs:

The ground level wind velocity: 7.0 mph
The ground level direction is from: 70.0 deg
Stability Class: C - Slightly Unstable

CALCULATED DOSES (mrem):

Distance (meters)	(miles)	Whole Body 5 cm Depth	Infant Thyroid
804.5	0.5	2.35E+03	4.27E+01
1609	1	7.00E+02	1.27E+01
3218	2	2.02E+02	3.67E+00
8045	5	3.85E+01	6.99E-01
12067.5	7.5	1.84E+01	3.35E-01
16090	10	1.09E+01	1.99E-01

Off Axes DEPOSITION (uCi/m2)
(miles)

mile	center line	0.1	0.2	0.3	0.4	0.5	0.6	0.7	0.8	0.9
0.5	3.58E+00	3.58E+00	3.58E+00	3.58E+00	3.58E+00	3.58E+00	3.58E+00	3.58E+00	3.58E+00	3.58E+00
1	3.58E+00	3.58E+00	3.58E+00	3.58E+00	3.58E+00	3.58E+00	3.58E+00	3.58E+00	3.58E+00	3.58E+00
2	3.58E+00	3.58E+00	3.58E+00	3.58E+00	3.58E+00	3.58E+00	3.58E+00	3.58E+00	3.58E+00	3.58E+00
5	3.58E+00	3.58E+00	3.58E+00	3.58E+00	3.58E+00	3.58E+00	3.58E+00	3.58E+00	3.58E+00	3.58E+00
7.5	3.58E+00	3.58E+00	3.58E+00	3.58E+00	3.58E+00	3.58E+00	3.58E+00	3.58E+00	3.58E+00	3.58E+00
10	3.58E+00	3.58E+00	3.58E+00	3.58E+00	3.58E+00	3.58E+00	3.58E+00	3.58E+00	3.58E+00	3.58E+00

Off Axes Six Inch Dose Rate (mR/hr)
(miles)

mile	center line	0.1	0.2	0.3	0.4	0.5	0.6	0.7	0.8	0.9
0.5	5.75E-01	5.75E-01	5.75E-01	5.75E-01	5.75E-01	5.75E-01	5.75E-01	5.75E-01	5.75E-01	5.75E-01
1	5.75E-01	5.75E-01	5.75E-01	5.75E-01	5.75E-01	5.75E-01	5.75E-01	5.75E-01	5.75E-01	5.75E-01
2	5.75E-01	5.75E-01	5.75E-01	5.75E-01	5.75E-01	5.75E-01	5.75E-01	5.75E-01	5.75E-01	5.75E-01
5	5.75E-01	5.75E-01	5.75E-01	5.75E-01	5.75E-01	5.75E-01	5.75E-01	5.75E-01	5.75E-01	5.75E-01
7.5	5.75E-01	5.75E-01	5.75E-01	5.75E-01	5.75E-01	5.75E-01	5.75E-01	5.75E-01	5.75E-01	5.75E-01
10	5.75E-01	5.75E-01	5.75E-01	5.75E-01	5.75E-01	5.75E-01	5.75E-01	5.75E-01	5.75E-01	5.75E-01

Off Axes WHOLE BODY Dose Rate (mrem/hr)
(miles)

mile	center line	0.1	0.2	0.3	0.4	0.5	0.6	0.7	0.8	0.9
0.5	0.00E+00	0.00E+00	0.00E+00	0.00E+00	0.00E+00	0.00E+00	0.00E+00	0.00E+00	0.00E+00	0.00E+00
1	0.00E+00	0.00E+00	0.00E+00	0.00E+00	0.00E+00	0.00E+00	0.00E+00	0.00E+00	0.00E+00	0.00E+00
2	0.00E+00	0.00E+00	0.00E+00	0.00E+00	0.00E+00	0.00E+00	0.00E+00	0.00E+00	0.00E+00	0.00E+00
5	0.00E+00	0.00E+00	0.00E+00	0.00E+00	0.00E+00	0.00E+00	0.00E+00	0.00E+00	0.00E+00	0.00E+00
7.5	0.00E+00	0.00E+00	0.00E+00	0.00E+00	0.00E+00	0.00E+00	0.00E+00	0.00E+00	0.00E+00	0.00E+00
10	0.00E+00	0.00E+00	0.00E+00	0.00E+00	0.00E+00	0.00E+00	0.00E+00	0.00E+00	0.00E+00	0.00E+00

Simulated Time: 13:15

Offsite
Offsite Data

Off Axes THYROID Dose Rate (mrem/hr)
(miles)

mile	center line	0.1	0.2	0.3	0.4	0.5	0.6	0.7	0.8	0.9
0.5	0.00E+00	0.00E+00	0.00E+00	0.00E+00	0.00E+00	0.00E+00	0.00E+00	0.00E+00	0.00E+00	0.00E+00
1	0.00E+00	0.00E+00	0.00E+00	0.00E+00	0.00E+00	0.00E+00	0.00E+00	0.00E+00	0.00E+00	0.00E+00
2	0.00E+00	0.00E+00	0.00E+00	0.00E+00	0.00E+00	0.00E+00	0.00E+00	0.00E+00	0.00E+00	0.00E+00
5	0.00E+00	0.00E+00	0.00E+00	0.00E+00	0.00E+00	0.00E+00	0.00E+00	0.00E+00	0.00E+00	0.00E+00
7.5	0.00E+00	0.00E+00	0.00E+00	0.00E+00	0.00E+00	0.00E+00	0.00E+00	0.00E+00	0.00E+00	0.00E+00
10	0.00E+00	0.00E+00	0.00E+00	0.00E+00	0.00E+00	0.00E+00	0.00E+00	0.00E+00	0.00E+00	0.00E+00

Off Axes NOBLE GAS Concentration (uCi/cc)
(miles)

mile	center line	0.1	0.2	0.3	0.4	0.5	0.6	0.7	0.8	0.9
0.5	0.00E+00	0.00E+00	0.00E+00	0.00E+00	0.00E+00	0.00E+00	0.00E+00	0.00E+00	0.00E+00	0.00E+00
1	0.00E+00	0.00E+00	0.00E+00	0.00E+00	0.00E+00	0.00E+00	0.00E+00	0.00E+00	0.00E+00	0.00E+00
2	0.00E+00	0.00E+00	0.00E+00	0.00E+00	0.00E+00	0.00E+00	0.00E+00	0.00E+00	0.00E+00	0.00E+00
5	0.00E+00	0.00E+00	0.00E+00	0.00E+00	0.00E+00	0.00E+00	0.00E+00	0.00E+00	0.00E+00	0.00E+00
7.5	0.00E+00	0.00E+00	0.00E+00	0.00E+00	0.00E+00	0.00E+00	0.00E+00	0.00E+00	0.00E+00	0.00E+00
10	0.00E+00	0.00E+00	0.00E+00	0.00E+00	0.00E+00	0.00E+00	0.00E+00	0.00E+00	0.00E+00	0.00E+00

Off Axes PARTICULATE Concentration (uCi/cc)
(miles)

mile	center line	0.1	0.2	0.3	0.4	0.5	0.6	0.7	0.8	0.9
0.5	0.00E+00	0.00E+00	0.00E+00	0.00E+00	0.00E+00	0.00E+00	0.00E+00	0.00E+00	0.00E+00	0.00E+00
1	0.00E+00	0.00E+00	0.00E+00	0.00E+00	0.00E+00	0.00E+00	0.00E+00	0.00E+00	0.00E+00	0.00E+00
2	0.00E+00	0.00E+00	0.00E+00	0.00E+00	0.00E+00	0.00E+00	0.00E+00	0.00E+00	0.00E+00	0.00E+00
5	0.00E+00	0.00E+00	0.00E+00	0.00E+00	0.00E+00	0.00E+00	0.00E+00	0.00E+00	0.00E+00	0.00E+00
7.5	0.00E+00	0.00E+00	0.00E+00	0.00E+00	0.00E+00	0.00E+00	0.00E+00	0.00E+00	0.00E+00	0.00E+00
10	0.00E+00	0.00E+00	0.00E+00	0.00E+00	0.00E+00	0.00E+00	0.00E+00	0.00E+00	0.00E+00	0.00E+00

Off Axes IODINE Concentration (uCi/cc)
(miles)

mile	center line	0.1	0.2	0.3	0.4	0.5	0.6	0.7	0.8	0.9
0.5	0.00E+00	0.00E+00	0.00E+00	0.00E+00	0.00E+00	0.00E+00	0.00E+00	0.00E+00	0.00E+00	0.00E+00
1	0.00E+00	0.00E+00	0.00E+00	0.00E+00	0.00E+00	0.00E+00	0.00E+00	0.00E+00	0.00E+00	0.00E+00
2	0.00E+00	0.00E+00	0.00E+00	0.00E+00	0.00E+00	0.00E+00	0.00E+00	0.00E+00	0.00E+00	0.00E+00
5	0.00E+00	0.00E+00	0.00E+00	0.00E+00	0.00E+00	0.00E+00	0.00E+00	0.00E+00	0.00E+00	0.00E+00
7.5	0.00E+00	0.00E+00	0.00E+00	0.00E+00	0.00E+00	0.00E+00	0.00E+00	0.00E+00	0.00E+00	0.00E+00
10	0.00E+00	0.00E+00	0.00E+00	0.00E+00	0.00E+00	0.00E+00	0.00E+00	0.00E+00	0.00E+00	0.00E+00

Off Axes Ground Deposition Measurements (cpm) for a Ludlum #44-40 Geiger Probe
(miles)

mile	center line	0.1	0.2	0.3	0.4	0.5	0.6	0.7	0.8	0.9
0.5	2.79E+01	2.79E+01	2.79E+01	2.79E+01	2.79E+01	2.79E+01	2.79E+01	2.79E+01	2.79E+01	2.79E+01
1	2.79E+01	2.79E+01	2.79E+01	2.79E+01	2.79E+01	2.79E+01	2.79E+01	2.79E+01	2.79E+01	2.79E+01
2	2.79E+01	2.79E+01	2.79E+01	2.79E+01	2.79E+01	2.79E+01	2.79E+01	2.79E+01	2.79E+01	2.79E+01
5	2.79E+01	2.79E+01	2.79E+01	2.79E+01	2.79E+01	2.79E+01	2.79E+01	2.79E+01	2.79E+01	2.79E+01
7.5	2.79E+01	2.79E+01	2.79E+01	2.79E+01	2.79E+01	2.79E+01	2.79E+01	2.79E+01	2.79E+01	2.79E+01
10	2.79E+01	2.79E+01	2.79E+01	2.79E+01	2.79E+01	2.79E+01	2.79E+01	2.79E+01	2.79E+01	2.79E+01

Off Axes Wipe Measurements (cpm) for a Ludlum #44-40 Geiger Probe
(miles)

mile	center line	0.1	0.2	0.3	0.4	0.5	0.6	0.7	0.8	0.9
0.5	5.17E+04	5.17E+04	5.17E+04	5.17E+04	5.17E+04	5.17E+04	5.17E+04	5.17E+04	5.17E+04	5.17E+04
1	5.17E+04	5.17E+04	5.17E+04	5.17E+04	5.17E+04	5.17E+04	5.17E+04	5.17E+04	5.17E+04	5.17E+04
2	5.17E+04	5.17E+04	5.17E+04	5.17E+04	5.17E+04	5.17E+04	5.17E+04	5.17E+04	5.17E+04	5.17E+04
5	5.17E+04	5.17E+04	5.17E+04	5.17E+04	5.17E+04	5.17E+04	5.17E+04	5.17E+04	5.17E+04	5.17E+04
7.5	5.17E+04	5.17E+04	5.17E+04	5.17E+04	5.17E+04	5.17E+04	5.17E+04	5.17E+04	5.17E+04	5.17E+04
10	5.17E+04	5.17E+04	5.17E+04	5.17E+04	5.17E+04	5.17E+04	5.17E+04	5.17E+04	5.17E+04	5.17E+04

Off Axes PARTICULATE Measurements (cpm) using a Ludlum #44-40 Probe for a 30 Cubic Foot Air Sample
(miles)

mile	center line	0.1	0.2	0.3	0.4	0.5	0.6	0.7	0.8	0.9
0.5	AS READ	AS READ	AS READ	AS READ	AS READ	AS READ	AS READ	AS READ	AS READ	AS READ
1	AS READ	AS READ	AS READ	AS READ	AS READ	AS READ	AS READ	AS READ	AS READ	AS READ
2	AS READ	AS READ	AS READ	AS READ	AS READ	AS READ	AS READ	AS READ	AS READ	AS READ
5	AS READ	AS READ	AS READ	AS READ	AS READ	AS READ	AS READ	AS READ	AS READ	AS READ
7.5	AS READ	AS READ	AS READ	AS READ	AS READ	AS READ	AS READ	AS READ	AS READ	AS READ
10	AS READ	AS READ	AS READ	AS READ	AS READ	AS READ	AS READ	AS READ	AS READ	AS READ

Off Axes IODINE Measurements (cpm) using a Ludlum #44-40 Probe for a 10 Cubic Foot Air Sample
(miles)

mile	center line	0.1	0.2	0.3	0.4	0.5	0.6	0.7	0.8	0.9
0.5	AS READ	AS READ	AS READ	AS READ	AS READ	AS READ	AS READ	AS READ	AS READ	AS READ
1	AS READ	AS READ	AS READ	AS READ	AS READ	AS READ	AS READ	AS READ	AS READ	AS READ
2	AS READ	AS READ	AS READ	AS READ	AS READ	AS READ	AS READ	AS READ	AS READ	AS READ
5	AS READ	AS READ	AS READ	AS READ	AS READ	AS READ	AS READ	AS READ	AS READ	AS READ
7.5	AS READ	AS READ	AS READ	AS READ	AS READ	AS READ	AS READ	AS READ	AS READ	AS READ
10	AS READ	AS READ	AS READ	AS READ	AS READ	AS READ	AS READ	AS READ	AS READ	AS READ

SCENARIO INFORMATION:

Simulated Time: 13:30
Interval Since Release Started (mins): 2:30

RELEASE IS FROM

Meteorological Inputs:

The ground level wind velocity: 7.0 mph
The ground level direction is from: 70.0 deg
Stability Class: C - Slightly Unstable

CALCULATED DOSES (mrem):

Distance (meters)	(miles)	Whole Body 5 cm Depth	Infant Thyroid
804.5	0.5	2.35E+03	4.27E+01
1609	1	7.00E+02	1.27E+01
3218	2	2.02E+02	3.67E+00
8045	5	3.85E+01	6.99E-01
12067.5	7.5	1.84E+01	3.35E-01
16090	10	1.09E+01	1.99E-01

Off Axes DEPOSITION (uCi/m2)
(miles)

mile	center line	0.1	0.2	0.3	0.4	0.5	0.6	0.7	0.8	0.9
0.5	0.00E+00	0.00E+00	0.00E+00	0.00E+00	0.00E+00	0.00E+00	0.00E+00	0.00E+00	0.00E+00	0.00E+00
1	0.00E+00	0.00E+00	0.00E+00	0.00E+00	0.00E+00	0.00E+00	0.00E+00	0.00E+00	0.00E+00	0.00E+00
2	0.00E+00	0.00E+00	0.00E+00	0.00E+00	0.00E+00	0.00E+00	0.00E+00	0.00E+00	0.00E+00	0.00E+00
5	0.00E+00	0.00E+00	0.00E+00	0.00E+00	0.00E+00	0.00E+00	0.00E+00	0.00E+00	0.00E+00	0.00E+00
7.5	0.00E+00	0.00E+00	0.00E+00	0.00E+00	0.00E+00	0.00E+00	0.00E+00	0.00E+00	0.00E+00	0.00E+00
10	0.00E+00	0.00E+00	0.00E+00	0.00E+00	0.00E+00	0.00E+00	0.00E+00	0.00E+00	0.00E+00	0.00E+00

Off Axes Six Inch Dose Rate (mR/hr)
(miles)

mile	center line	0.1	0.2	0.3	0.4	0.5	0.6	0.7	0.8	0.9
0.5	0.00E+00	0.00E+00	0.00E+00	0.00E+00	0.00E+00	0.00E+00	0.00E+00	0.00E+00	0.00E+00	0.00E+00
1	0.00E+00	0.00E+00	0.00E+00	0.00E+00	0.00E+00	0.00E+00	0.00E+00	0.00E+00	0.00E+00	0.00E+00
2	0.00E+00	0.00E+00	0.00E+00	0.00E+00	0.00E+00	0.00E+00	0.00E+00	0.00E+00	0.00E+00	0.00E+00
5	0.00E+00	0.00E+00	0.00E+00	0.00E+00	0.00E+00	0.00E+00	0.00E+00	0.00E+00	0.00E+00	0.00E+00
7.5	0.00E+00	0.00E+00	0.00E+00	0.00E+00	0.00E+00	0.00E+00	0.00E+00	0.00E+00	0.00E+00	0.00E+00
10	0.00E+00	0.00E+00	0.00E+00	0.00E+00	0.00E+00	0.00E+00	0.00E+00	0.00E+00	0.00E+00	0.00E+00

Off Axes WHOLE BODY Dose Rate (mrem/hr)
(miles)

mile	center line	0.1	0.2	0.3	0.4	0.5	0.6	0.7	0.8	0.9
0.5	0.00E+00	0.00E+00	0.00E+00	0.00E+00	0.00E+00	0.00E+00	0.00E+00	0.00E+00	0.00E+00	0.00E+00
1	0.00E+00	0.00E+00	0.00E+00	0.00E+00	0.00E+00	0.00E+00	0.00E+00	0.00E+00	0.00E+00	0.00E+00
2	0.00E+00	0.00E+00	0.00E+00	0.00E+00	0.00E+00	0.00E+00	0.00E+00	0.00E+00	0.00E+00	0.00E+00
5	0.00E+00	0.00E+00	0.00E+00	0.00E+00	0.00E+00	0.00E+00	0.00E+00	0.00E+00	0.00E+00	0.00E+00
7.5	0.00E+00	0.00E+00	0.00E+00	0.00E+00	0.00E+00	0.00E+00	0.00E+00	0.00E+00	0.00E+00	0.00E+00
10	0.00E+00	0.00E+00	0.00E+00	0.00E+00	0.00E+00	0.00E+00	0.00E+00	0.00E+00	0.00E+00	0.00E+00

Off Axes THYROID Dose Rate (mrem/hr)
(miles)

mile	center line	0.1	0.2	0.3	0.4	0.5	0.6	0.7	0.8	0.9
0.5	0.00E+00	0.00E+00	0.00E+00	0.00E+00	0.00E+00	0.00E+00	0.00E+00	0.00E+00	0.00E+00	0.00E+00
1	0.00E+00	0.00E+00	0.00E+00	0.00E+00	0.00E+00	0.00E+00	0.00E+00	0.00E+00	0.00E+00	0.00E+00
2	0.00E+00	0.00E+00	0.00E+00	0.00E+00	0.00E+00	0.00E+00	0.00E+00	0.00E+00	0.00E+00	0.00E+00
5	0.00E+00	0.00E+00	0.00E+00	0.00E+00	0.00E+00	0.00E+00	0.00E+00	0.00E+00	0.00E+00	0.00E+00
7.5	0.00E+00	0.00E+00	0.00E+00	0.00E+00	0.00E+00	0.00E+00	0.00E+00	0.00E+00	0.00E+00	0.00E+00
10	0.00E+00	0.00E+00	0.00E+00	0.00E+00	0.00E+00	0.00E+00	0.00E+00	0.00E+00	0.00E+00	0.00E+00

Off Axes NOBLE GAS Concentration (uCi/cc)
(miles)

mile	center line	0.1	0.2	0.3	0.4	0.5	0.6	0.7	0.8	0.9
0.5	0.00E+00	0.00E+00	0.00E+00	0.00E+00	0.00E+00	0.00E+00	0.00E+00	0.00E+00	0.00E+00	0.00E+00
1	0.00E+00	0.00E+00	0.00E+00	0.00E+00	0.00E+00	0.00E+00	0.00E+00	0.00E+00	0.00E+00	0.00E+00
2	0.00E+00	0.00E+00	0.00E+00	0.00E+00	0.00E+00	0.00E+00	0.00E+00	0.00E+00	0.00E+00	0.00E+00
5	0.00E+00	0.00E+00	0.00E+00	0.00E+00	0.00E+00	0.00E+00	0.00E+00	0.00E+00	0.00E+00	0.00E+00
7.5	0.00E+00	0.00E+00	0.00E+00	0.00E+00	0.00E+00	0.00E+00	0.00E+00	0.00E+00	0.00E+00	0.00E+00
10	0.00E+00	0.00E+00	0.00E+00	0.00E+00	0.00E+00	0.00E+00	0.00E+00	0.00E+00	0.00E+00	0.00E+00

Off Axes PARTICULATE Concentration (uCi/cc)
(miles)

mile	center line	0.1	0.2	0.3	0.4	0.5	0.6	0.7	0.8	0.9
0.5	0.00E+00	0.00E+00	0.00E+00	0.00E+00	0.00E+00	0.00E+00	0.00E+00	0.00E+00	0.00E+00	0.00E+00
1	0.00E+00	0.00E+00	0.00E+00	0.00E+00	0.00E+00	0.00E+00	0.00E+00	0.00E+00	0.00E+00	0.00E+00
2	0.00E+00	0.00E+00	0.00E+00	0.00E+00	0.00E+00	0.00E+00	0.00E+00	0.00E+00	0.00E+00	0.00E+00
5	0.00E+00	0.00E+00	0.00E+00	0.00E+00	0.00E+00	0.00E+00	0.00E+00	0.00E+00	0.00E+00	0.00E+00
7 5	0.00E+00	0.00E+00	0.00E+00	0.00E+00	0.00E+00	0.00E+00	0.00E+00	0.00E+00	0.00E+00	0.00E+00
10	0.00E+00	0.00E+00	0.00E+00	0.00E+00	0.00E+00	0.00E+00	0.00E+00	0.00E+00	0.00E+00	0.00E+00

Off Axes IODINE Concentration (uCi/cc)
(miles)

mile	center line	0.1	0.2	0.3	0.4	0.5	0.6	0.7	0.8	0.9
0.5	0.00E+00	0.00E+00	0.00E+00	0.00E+00	0.00E+00	0.00E+00	0.00E+00	0.00E+00	0.00E+00	0.00E+00
1	0.00E+00	0.00E+00	0.00E+00	0.00E+00	0.00E+00	0.00E+00	0.00E+00	0.00E+00	0.00E+00	0.00E+00
2	0.00E+00	0.00E+00	0.00E+00	0.00E+00	0.00E+00	0.00E+00	0.00E+00	0.00E+00	0.00E+00	0.00E+00
5	0.00E+00	0.00E+00	0.00E+00	0.00E+00	0.00E+00	0.00E+00	0.00E+00	0.00E+00	0.00E+00	0.00E+00
7.5	0.00E+00	0.00E+00	0.00E+00	0.00E+00	0.00E+00	0.00E+00	0.00E+00	0.00E+00	0.00E+00	0.00E+00
10	0.00E+00	0.00E+00	0.00E+00	0.00E+00	0.00E+00	0.00E+00	0.00E+00	0.00E+00	0.00E+00	0.00E+00

Off Axes Ground Deposition Measurements (cpm) for a Ludlum #44-40 Geiger Probe
(miles)

mile	center line	0.1	0.2	0.3	0.4	0.5	0.6	0.7	0.8	0.9
0.5	AS READ	AS READ	AS READ	AS READ	AS READ	AS READ	AS READ	AS READ	AS READ	AS READ
1	AS READ	AS READ	AS READ	AS READ	AS READ	AS READ	AS READ	AS READ	AS READ	AS READ
2	AS READ	AS READ	AS READ	AS READ	AS READ	AS READ	AS READ	AS READ	AS READ	AS READ
5	AS READ	AS READ	AS READ	AS READ	AS READ	AS READ	AS READ	AS READ	AS READ	AS READ
7.5	AS READ	AS READ	AS READ	AS READ	AS READ	AS READ	AS READ	AS READ	AS READ	AS READ
10	AS READ	AS READ	AS READ	AS READ	AS READ	AS READ	AS READ	AS READ	AS READ	AS READ

Simulated Time: 13:30

Off Axes Wipe Measurements (cpm) for a Ludlum #44-40 Geiger Probe
(miles)

mile	center line	0.1	0.2	0.3	0.4	0.5	0.6	0.7	0.8	0.9
0.5	AS READ	AS READ	AS READ	AS READ	AS READ	AS READ	AS READ	AS READ	AS READ	AS READ
1	AS READ	AS READ	AS READ	AS READ	AS READ	AS READ	AS READ	AS READ	AS READ	AS READ
2	AS READ	AS READ	AS READ	AS READ	AS READ	AS READ	AS READ	AS READ	AS READ	AS READ
5	AS READ	AS READ	AS READ	AS READ	AS READ	AS READ	AS READ	AS READ	AS READ	AS READ
7.5	AS READ	AS READ	AS READ	AS READ	AS READ	AS READ	AS READ	AS READ	AS READ	AS READ
10	AS READ	AS READ	AS READ	AS READ	AS READ	AS READ	AS READ	AS READ	AS READ	AS READ

Off Axes PARTICULATE Measurements (cpm) using a Ludlum #44-40 Probe for a 30 Cubic Foot Air Sample
(miles)

mile	center line	0.1	0.2	0.3	0.4	0.5	0.6	0.7	0.8	0.9
0.5	AS READ	AS READ	AS READ	AS READ	AS READ	AS READ	AS READ	AS READ	AS READ	AS READ
1	AS READ	AS READ	AS READ	AS READ	AS READ	AS READ	AS READ	AS READ	AS READ	AS READ
2	AS READ	AS READ	AS READ	AS READ	AS READ	AS READ	AS READ	AS READ	AS READ	AS READ
5	AS READ	AS READ	AS READ	AS READ	AS READ	AS READ	AS READ	AS READ	AS READ	AS READ
7.5	AS READ	AS READ	AS READ	AS READ	AS READ	AS READ	AS READ	AS READ	AS READ	AS READ
10	AS READ	AS READ	AS READ	AS READ	AS READ	AS READ	AS READ	AS READ	AS READ	AS READ

Off Axes IODINE Measurements (cpm) using a Ludlum #44-40 Probe for a 10 Cubic Foot Air Sample
(miles)

mile	center line	0.1	0.2	0.3	0.4	0.5	0.6	0.7	0.8	0.9
0.5	AS READ	AS READ	AS READ	AS READ	AS READ	AS READ	AS READ	AS READ	AS READ	AS READ
1	AS READ	AS READ	AS READ	AS READ	AS READ	AS READ	AS READ	AS READ	AS READ	AS READ
2	AS READ	AS READ	AS READ	AS READ	AS READ	AS READ	AS READ	AS READ	AS READ	AS READ
5	AS READ	AS READ	AS READ	AS READ	AS READ	AS READ	AS READ	AS READ	AS READ	AS READ
7.5	AS READ	AS READ	AS READ	AS READ	AS READ	AS READ	AS READ	AS READ	AS READ	AS READ
10	AS READ	AS READ	AS READ	AS READ	AS READ	AS READ	AS READ	AS READ	AS READ	AS READ

SCENARIO INFORMATION:

Simulated Time: 13:45
Interval Since Release Started (mins): 2:45

RELEASE IS FROM

Meteorological Inputs:

The ground level wind velocity: 7.0 mph
The ground level direction is from: 70.0 deg
Stability Class: C - Slightly Unstable

CALCULATED DOSES (mrem):

Distance (meters)	(miles)	Whole Body 5 cm Depth	Infant Thyroid
804.5	0.5	2.35E+03	4.27E+01
1609	1	7.00E+02	1.27E+01
3218	2	2.02E+02	3.67E+00
8045	5	3.85E+01	6.99E-01
12067.5	7.5	1.84E+01	3.35E-01
16090	10	1.09E+01	1.99E-01

Off Axes DEPOSITION (uCi/m2)
(miles)

mile	center line	0.1	0.2	0.3	0.4	0.5	0.6	0.7	0.8	0.9
0.5	0.00E+00	0.00E+00	0.00E+00	0.00E+00	0.00E+00	0.00E+00	0.00E+00	0.00E+00	0.00E+00	0.00E+00
1	0.00E+00	0.00E+00	0.00E+00	0.00E+00	0.00E+00	0.00E+00	0.00E+00	0.00E+00	0.00E+00	0.00E+00
2	0.00E+00	0.00E+00	0.00E+00	0.00E+00	0.00E+00	0.00E+00	0.00E+00	0.00E+00	0.00E+00	0.00E+00
5	0.00E+00	0.00E+00	0.00E+00	0.00E+00	0.00E+00	0.00E+00	0.00E+00	0.00E+00	0.00E+00	0.00E+00
7.5	0.00E+00	0.00E+00	0.00E+00	0.00E+00	0.00E+00	0.00E+00	0.00E+00	0.00E+00	0.00E+00	0.00E+00
10	0.00E+00	0.00E+00	0.00E+00	0.00E+00	0.00E+00	0.00E+00	0.00E+00	0.00E+00	0.00E+00	0.00E+00

Off Axes Six Inch Dose Rate (mR/hr)
(miles)

mile	center line	0.1	0.2	0.3	0.4	0.5	0.6	0.7	0.8	0.9
0.5	0.00E+00	0.00E+00	0.00E+00	0.00E+00	0.00E+00	0.00E+00	0.00E+00	0.00E+00	0.00E+00	0.00E+00
1	0.00E+00	0.00E+00	0.00E+00	0.00E+00	0.00E+00	0.00E+00	0.00E+00	0.00E+00	0.00E+00	0.00E+00
2	0.00E+00	0.00E+00	0.00E+00	0.00E+00	0.00E+00	0.00E+00	0.00E+00	0.00E+00	0.00E+00	0.00E+00
5	0.00E+00	0.00E+00	0.00E+00	0.00E+00	0.00E+00	0.00E+00	0.00E+00	0.00E+00	0.00E+00	0.00E+00
7.5	0.00E+00	0.00E+00	0.00E+00	0.00E+00	0.00E+00	0.00E+00	0.00E+00	0.00E+00	0.00E+00	0.00E+00
10	0.00E+00	0.00E+00	0.00E+00	0.00E+00	0.00E+00	0.00E+00	0.00E+00	0.00E+00	0.00E+00	0.00E+00

Off Axes WHOLE BODY Dose Rate (mrem/hr)
(miles)

mile	center line	0.1	0.2	0.3	0.4	0.5	0.6	0.7	0.8	0.9
0.5	0.00E+00	0.00E+00	0.00E+00	0.00E+00	0.00E+00	0.00E+00	0.00E+00	0.00E+00	0.00E+00	0.00E+00
1	0.00E+00	0.00E+00	0.00E+00	0.00E+00	0.00E+00	0.00E+00	0.00E+00	0.00E+00	0.00E+00	0.00E+00
2	0.00E+00	0.00E+00	0.00E+00	0.00E+00	0.00E+00	0.00E+00	0.00E+00	0.00E+00	0.00E+00	0.00E+00
5	0.00E+00	0.00E+00	0.00E+00	0.00E+00	0.00E+00	0.00E+00	0.00E+00	0.00E+00	0.00E+00	0.00E+00
7.5	0.00E+00	0.00E+00	0.00E+00	0.00E+00	0.00E+00	0.00E+00	0.00E+00	0.00E+00	0.00E+00	0.00E+00
10	0.00E+00	0.00E+00	0.00E+00	0.00E+00	0.00E+00	0.00E+00	0.00E+00	0.00E+00	0.00E+00	0.00E+00

Off Axes THYROID Dose Rate (mrem/hr)
(miles)

mile	center line	0.1	0.2	0.3	0.4	0.5	0.6	0.7	0.8	0.9
0.5	0.00E+00	0.00E+00	0.00E+00	0.00E+00	0.00E+00	0.00E+00	0.00E+00	0.00E+00	0.00E+00	0.00E+00
1	0.00E+00	0.00E+00	0.00E+00	0.00E+00	0.00E+00	0.00E+00	0.00E+00	0.00E+00	0.00E+00	0.00E+00
2	0.00E+00	0.00E+00	0.00E+00	0.00E+00	0.00E+00	0.00E+00	0.00E+00	0.00E+00	0.00E+00	0.00E+00
5	0.00E+00	0.00E+00	0.00E+00	0.00E+00	0.00E+00	0.00E+00	0.00E+00	0.00E+00	0.00E+00	0.00E+00
7.5	0.00E+00	0.00E+00	0.00E+00	0.00E+00	0.00E+00	0.00E+00	0.00E+00	0.00E+00	0.00E+00	0.00E+00
10	0.00E+00	0.00E+00	0.00E+00	0.00E+00	0.00E+00	0.00E+00	0.00E+00	0.00E+00	0.00E+00	0.00E+00

Off Axes NOBLE GAS Concentration (uCi/cc)
(miles)

mile	center line	0.1	0.2	0.3	0.4	0.5	0.6	0.7	0.8	0.9
0.5	0.00E+00	0.00E+00	0.00E+00	0.00E+00	0.00E+00	0.00E+00	0.00E+00	0.00E+00	0.00E+00	0.00E+00
1	0.00E+00	0.00E+00	0.00E+00	0.00E+00	0.00E+00	0.00E+00	0.00E+00	0.00E+00	0.00E+00	0.00E+00
2	0.00E+00	0.00E+00	0.00E+00	0.00E+00	0.00E+00	0.00E+00	0.00E+00	0.00E+00	0.00E+00	0.00E+00
5	0.00E+00	0.00E+00	0.00E+00	0.00E+00	0.00E+00	0.00E+00	0.00E+00	0.00E+00	0.00E+00	0.00E+00
7.5	0.00E+00	0.00E+00	0.00E+00	0.00E+00	0.00E+00	0.00E+00	0.00E+00	0.00E+00	0.00E+00	0.00E+00
10	0.00E+00	0.00E+00	0.00E+00	0.00E+00	0.00E+00	0.00E+00	0.00E+00	0.00E+00	0.00E+00	0.00E+00

Off Axes PARTICULATE Concentration (uCi/cc)
(miles)

mile	center line	0.1	0.2	0.3	0.4	0.5	0.6	0.7	0.8	0.9
0.5	0.00E+00	0.00E+00	0.00E+00	0.00E+00	0.00E+00	0.00E+00	0.00E+00	0.00E+00	0.00E+00	0.00E+00
1	0.00E+00	0.00E+00	0.00E+00	0.00E+00	0.00E+00	0.00E+00	0.00E+00	0.00E+00	0.00E+00	0.00E+00
2	0.00E+00	0.00E+00	0.00E+00	0.00E+00	0.00E+00	0.00E+00	0.00E+00	0.00E+00	0.00E+00	0.00E+00
5	0.00E+00	0.00E+00	0.00E+00	0.00E+00	0.00E+00	0.00E+00	0.00E+00	0.00E+00	0.00E+00	0.00E+00
7.5	0.00E+00	0.00E+00	0.00E+00	0.00E+00	0.00E+00	0.00E+00	0.00E+00	0.00E+00	0.00E+00	0.00E+00
10	0.00E+00	0.00E+00	0.00E+00	0.00E+00	0.00E+00	0.00E+00	0.00E+00	0.00E+00	0.00E+00	0.00E+00

Off Axes IODINE Concentration (uCi/cc)
(miles)

mile	center line	0.1	0.2	0.3	0.4	0.5	0.6	0.7	0.8	0.9
0.5	0.00E+00	0.00E+00	0.00E+00	0.00E+00	0.00E+00	0.00E+00	0.00E+00	0.00E+00	0.00E+00	0.00E+00
1	0.00E+00	0.00E+00	0.00E+00	0.00E+00	0.00E+00	0.00E+00	0.00E+00	0.00E+00	0.00E+00	0.00E+00
2	0.00E+00	0.00E+00	0.00E+00	0.00E+00	0.00E+00	0.00E+00	0.00E+00	0.00E+00	0.00E+00	0.00E+00
5	0.00E+00	0.00E+00	0.00E+00	0.00E+00	0.00E+00	0.00E+00	0.00E+00	0.00E+00	0.00E+00	0.00E+00
7.5	0.00E+00	0.00E+00	0.00E+00	0.00E+00	0.00E+00	0.00E+00	0.00E+00	0.00E+00	0.00E+00	0.00E+00
10	0.00E+00	0.00E+00	0.00E+00	0.00E+00	0.00E+00	0.00E+00	0.00E+00	0.00E+00	0.00E+00	0.00E+00

Off Axes Ground Deposition Measurements (cpm) for a Ludlum #44-40 Geiger Probe
(miles)

mile	center line	0.1	0.2	0.3	0.4	0.5	0.6	0.7	0.8	0.9
0.5	AS READ	AS READ	AS READ	AS READ	AS READ	AS READ	AS READ	AS READ	AS READ	AS READ
1	AS READ	AS READ	AS READ	AS READ	AS READ	AS READ	AS READ	AS READ	AS READ	AS READ
2	AS READ	AS READ	AS READ	AS READ	AS READ	AS READ	AS READ	AS READ	AS READ	AS READ
5	AS READ	AS READ	AS READ	AS READ	AS READ	AS READ	AS READ	AS READ	AS READ	AS READ
7.5	AS READ	AS READ	AS READ	AS READ	AS READ	AS READ	AS READ	AS READ	AS READ	AS READ
10	AS READ	AS READ	AS READ	AS READ	AS READ	AS READ	AS READ	AS READ	AS READ	AS READ

Off Axes Wipe Measurements (cpm) for a Ludlum #44-40 Geiger Probe
(miles)

mile	center line	0.1	0.2	0.3	0.4	0.5	0.6	0.7	0.8	0.9
0.5	AS READ	AS READ	AS READ	AS READ	AS READ	AS READ	AS READ	AS READ	AS READ	AS READ
1	AS READ	AS READ	AS READ	AS READ	AS READ	AS READ	AS READ	AS READ	AS READ	AS READ
2	AS READ	AS READ	AS READ	AS READ	AS READ	AS READ	AS READ	AS READ	AS READ	AS READ
5	AS READ	AS READ	AS READ	AS READ	AS READ	AS READ	AS READ	AS READ	AS READ	AS READ
7.5	AS READ	AS READ	AS READ	AS READ	AS READ	AS READ	AS READ	AS READ	AS READ	AS READ
10	AS READ	AS READ	AS READ	AS READ	AS READ	AS READ	AS READ	AS READ	AS READ	AS READ

Off Axes PARTICULATE Measurements (cpm) using a Ludlum #44-40 Probe for a 30 Cubic Foot Air Sample
(miles)

mile	center line	0.1	0.2	0.3	0.4	0.5	0.6	0.7	0.8	0.9
0.5	AS READ	AS READ	AS READ	AS READ	AS READ	AS READ	AS READ	AS READ	AS READ	AS READ
1	AS READ	AS READ	AS READ	AS READ	AS READ	AS READ	AS READ	AS READ	AS READ	AS READ
2	AS READ	AS READ	AS READ	AS READ	AS READ	AS READ	AS READ	AS READ	AS READ	AS READ
5	AS READ	AS READ	AS READ	AS READ	AS READ	AS READ	AS READ	AS READ	AS READ	AS READ
7.5	AS READ	AS READ	AS READ	AS READ	AS READ	AS READ	AS READ	AS READ	AS READ	AS READ
10	AS READ	AS READ	AS READ	AS READ	AS READ	AS READ	AS READ	AS READ	AS READ	AS READ

Off Axes IODINE Measurements (cpm) using a Ludlum #44-40 Probe for a 10 Cubic Foot Air Sample
(miles)

mile	center line	0.1	0.2	0.3	0.4	0.5	0.6	0.7	0.8	0.9
0.5	AS READ	AS READ	AS READ	AS READ	AS READ	AS READ	AS READ	AS READ	AS READ	AS READ
1	AS READ	AS READ	AS READ	AS READ	AS READ	AS READ	AS READ	AS READ	AS READ	AS READ
2	AS READ	AS READ	AS READ	AS READ	AS READ	AS READ	AS READ	AS READ	AS READ	AS READ
5	AS READ	AS READ	AS READ	AS READ	AS READ	AS READ	AS READ	AS READ	AS READ	AS READ
7.5	AS READ	AS READ	AS READ	AS READ	AS READ	AS READ	AS READ	AS READ	AS READ	AS READ
10	AS READ	AS READ	AS READ	AS READ	AS READ	AS READ	AS READ	AS READ	AS READ	AS READ

SCENARIO INFORMATION:

Simulated Time: 14:00
Interval Since Release Started (mins): 2:55

RELEASE IS FROM

Meteorological Inputs:

The ground level wind velocity: 7.0 mph
The ground level direction is from: 70.0 deg
Stability Class: C - Slightly Unstable

CALCULATED DOSES (mrem):

Distance (meters)	(miles)	Whole Body 5 cm Depth	Infant Thyroid
804.5	0.5	2.35E+03	4.27E+01
1609	1	7.00E+02	1.27E+01
3218	2	2.02E+02	3.67E+00
8045	5	3.85E+01	6.99E-01
12067.5	7.5	1.84E+01	3.35E-01
16090	10	1.09E+01	1.99E-01

Off Axes DEPOSITION (uCi/m2)
(miles)

mile	center line	0.1	0.2	0.3	0.4	0.5	0.6	0.7	0.8	0.9
0.5	0.00E+00	0.00E+00	0.00E+00	0.00E+00	0.00E+00	0.00E+00	0.00E+00	0.00E+00	0.00E+00	0.00E+00
1	0.00E+00	0.00E+00	0.00E+00	0.00E+00	0.00E+00	0.00E+00	0.00E+00	0.00E+00	0.00E+00	0.00E+00
2	0.00E+00	0.00E+00	0.00E+00	0.00E+00	0.00E+00	0.00E+00	0.00E+00	0.00E+00	0.00E+00	0.00E+00
5	0.00E+00	0.00E+00	0.00E+00	0.00E+00	0.00E+00	0.00E+00	0.00E+00	0.00E+00	0.00E+00	0.00E+00
7.5	0.00E+00	0.00E+00	0.00E+00	0.00E+00	0.00E+00	0.00E+00	0.00E+00	0.00E+00	0.00E+00	0.00E+00
10	0.00E+00	0.00E+00	0.00E+00	0.00E+00	0.00E+00	0.00E+00	0.00E+00	0.00E+00	0.00E+00	0.00E+00

Off Axes Six Inch Dose Rate (mR/hr)
(miles)

mile	center line	0.1	0.2	0.3	0.4	0.5	0.6	0.7	0.8	0.9
0.5	0.00E+00	0.00E+00	0.00E+00	0.00E+00	0.00E+00	0.00E+00	0.00E+00	0.00E+00	0.00E+00	0.00E+00
1	0.00E+00	0.00E+00	0.00E+00	0.00E+00	0.00E+00	0.00E+00	0.00E+00	0.00E+00	0.00E+00	0.00E+00
2	0.00E+00	0.00E+00	0.00E+00	0.00E+00	0.00E+00	0.00E+00	0.00E+00	0.00E+00	0.00E+00	0.00E+00
5	0.00E+00	0.00E+00	0.00E+00	0.00E+00	0.00E+00	0.00E+00	0.00E+00	0.00E+00	0.00E+00	0.00E+00
7.5	0.00E+00	0.00E+00	0.00E+00	0.00E+00	0.00E+00	0.00E+00	0.00E+00	0.00E+00	0.00E+00	0.00E+00
10	0.00E+00	0.00E+00	0.00E+00	0.00E+00	0.00E+00	0.00E+00	0.00E+00	0.00E+00	0.00E+00	0.00E+00

Off Axes WHOLE BODY Dose Rate (mrem/hr)
(miles)

mile	center line	0.1	0.2	0.3	0.4	0.5	0.6	0.7	0.8	0.9
0.5	0.00E+00	0.00E+00	0.00E+00	0.00E+00	0.00E+00	0.00E+00	0.00E+00	0.00E+00	0.00E+00	0.00E+00
1	0.00E+00	0.00E+00	0.00E+00	0.00E+00	0.00E+00	0.00E+00	0.00E+00	0.00E+00	0.00E+00	0.00E+00
2	0.00E+00	0.00E+00	0.00E+00	0.00E+00	0.00E+00	0.00E+00	0.00E+00	0.00E+00	0.00E+00	0.00E+00
5	0.00E+00	0.00E+00	0.00E+00	0.00E+00	0.00E+00	0.00E+00	0.00E+00	0.00E+00	0.00E+00	0.00E+00
7.5	0.00E+00	0.00E+00	0.00E+00	0.00E+00	0.00E+00	0.00E+00	0.00E+00	0.00E+00	0.00E+00	0.00E+00
10	0.00E+00	0.00E+00	0.00E+00	0.00E+00	0.00E+00	0.00E+00	0.00E+00	0.00E+00	0.00E+00	0.00E+00

Off Axes THYROID Dose Rate (mrem/hr)
(miles)

mile	center line	0.1	0.2	0.3	0.4	0.5	0.6	0.7	0.8	0.9
0.5	0.00E+00	0.00E+00	0.00E+00	0.00E+00	0.00E+00	0.00E+00	0.00E+00	0.00E+00	0.00E+00	0.00E+00
1	0.00E+00	0.00E+00	0.00E+00	0.00E+00	0.00E+00	0.00E+00	0.00E+00	0.00E+00	0.00E+00	0.00E+00
2	0.00E+00	0.00E+00	0.00E+00	0.00E+00	0.00E+00	0.00E+00	0.00E+00	0.00E+00	0.00E+00	0.00E+00
5	0.00E+00	0.00E+00	0.00E+00	0.00E+00	0.00E+00	0.00E+00	0.00E+00	0.00E+00	0.00E+00	0.00E+00
7.5	0.00E+00	0.00E+00	0.00E+00	0.00E+00	0.00E+00	0.00E+00	0.00E+00	0.00E+00	0.00E+00	0.00E+00
10	0.00E+00	0.00E+00	0.00E+00	0.00E+00	0.00E+00	0.00E+00	0.00E+00	0.00E+00	0.00E+00	0.00E+00

Off Axes NOBLE GAS Concentration (uCi/cc)
(miles)

mile	center line	0.1	0.2	0.3	0.4	0.5	0.6	0.7	0.8	0.9
0.5	0.00E+00	0.00E+00	0.00E+00	0.00E+00	0.00E+00	0.00E+00	0.00E+00	0.00E+00	0.00E+00	0.00E+00
1	0.00E+00	0.00E+00	0.00E+00	0.00E+00	0.00E+00	0.00E+00	0.00E+00	0.00E+00	0.00E+00	0.00E+00
2	0.00E+00	0.00E+00	0.00E+00	0.00E+00	0.00E+00	0.00E+00	0.00E+00	0.00E+00	0.00E+00	0.00E+00
5	0.00E+00	0.00E+00	0.00E+00	0.00E+00	0.00E+00	0.00E+00	0.00E+00	0.00E+00	0.00E+00	0.00E+00
7.5	0.00E+00	0.00E+00	0.00E+00	0.00E+00	0.00E+00	0.00E+00	0.00E+00	0.00E+00	0.00E+00	0.00E+00
10	0.00E+00	0.00E+00	0.00E+00	0.00E+00	0.00E+00	0.00E+00	0.00E+00	0.00E+00	0.00E+00	0.00E+00

Off Axes PARTICULATE Concentration (uCi/cc)
(miles)

mile	center line	0.1	0.2	0.3	0.4	0.5	0.6	0.7	0.8	0.9
0.5	0.00E+00	0.00E+00	0.00E+00	0.00E+00	0.00E+00	0.00E+00	0.00E+00	0.00E+00	0.00E+00	0.00E+00
1	0.00E+00	0.00E+00	0.00E+00	0.00E+00	0.00E+00	0.00E+00	0.00E+00	0.00E+00	0.00E+00	0.00E+00
2	0.00E+00	0.00E+00	0.00E+00	0.00E+00	0.00E+00	0.00E+00	0.00E+00	0.00E+00	0.00E+00	0.00E+00
5	0.00E+00	0.00E+00	0.00E+00	0.00E+00	0.00E+00	0.00E+00	0.00E+00	0.00E+00	0.00E+00	0.00E+00
7.5	0.00E+00	0.00E+00	0.00E+00	0.00E+00	0.00E+00	0.00E+00	0.00E+00	0.00E+00	0.00E+00	0.00E+00
10	0.00E+00	0.00E+00	0.00E+00	0.00E+00	0.00E+00	0.00E+00	0.00E+00	0.00E+00	0.00E+00	0.00E+00

Off Axes IODINE Concentration (uCi/cc)
(miles)

mile	center line	0.1	0.2	0.3	0.4	0.5	0.6	0.7	0.8	0.9
0.5	0.00E+00	0.00E+00	0.00E+00	0.00E+00	0.00E+00	0.00E+00	0.00E+00	0.00E+00	0.00E+00	0.00E+00
1	0.00E+00	0.00E+00	0.00E+00	0.00E+00	0.00E+00	0.00E+00	0.00E+00	0.00E+00	0.00E+00	0.00E+00
2	0.00E+00	0.00E+00	0.00E+00	0.00E+00	0.00E+00	0.00E+00	0.00E+00	0.00E+00	0.00E+00	0.00E+00
5	0.00E+00	0.00E+00	0.00E+00	0.00E+00	0.00E+00	0.00E+00	0.00E+00	0.00E+00	0.00E+00	0.00E+00
7.5	0.00E+00	0.00E+00	0.00E+00	0.00E+00	0.00E+00	0.00E+00	0.00E+00	0.00E+00	0.00E+00	0.00E+00
10	0.00E+00	0.00E+00	0.00E+00	0.00E+00	0.00E+00	0.00E+00	0.00E+00	0.00E+00	0.00E+00	0.00E+00

Off Axes Ground Deposition Measurements (cpm) for a Ludlum #44-40 Geiger Probe
(miles)

mile	center line	0.1	0.2	0.3	0.4	0.5	0.6	0.7	0.8	0.9
0.5	AS READ	AS READ	AS READ	AS READ	AS READ	AS READ	AS READ	AS READ	AS READ	AS READ
1	AS READ	AS READ	AS READ	AS READ	AS READ	AS READ	AS READ	AS READ	AS READ	AS READ
2	AS READ	AS READ	AS READ	AS READ	AS READ	AS READ	AS READ	AS READ	AS READ	AS READ
5	AS READ	AS READ	AS READ	AS READ	AS READ	AS READ	AS READ	AS READ	AS READ	AS READ
7.5	AS READ	AS READ	AS READ	AS READ	AS READ	AS READ	AS READ	AS READ	AS READ	AS READ
10	AS READ	AS READ	AS READ	AS READ	AS READ	AS READ	AS READ	AS READ	AS READ	AS READ

Simulated Time: 14:00

Offsite
Offsite Data

Off Axes Wipe Measurements (cpm) for a Ludlum #44-40 Geiger Probe
(miles)

mile	center line	0.1	0.2	0.3	0.4	0.5	0.6	0.7	0.8	0.9
0.5	AS READ	AS READ	AS READ	AS READ	AS READ	AS READ	AS READ	AS READ	AS READ	AS READ
1	AS READ	AS READ	AS READ	AS READ	AS READ	AS READ	AS READ	AS READ	AS READ	AS READ
2	AS READ	AS READ	AS READ	AS READ	AS READ	AS READ	AS READ	AS READ	AS READ	AS READ
5	AS READ	AS READ	AS READ	AS READ	AS READ	AS READ	AS READ	AS READ	AS READ	AS READ
7.5	AS READ	AS READ	AS READ	AS READ	AS READ	AS READ	AS READ	AS READ	AS READ	AS READ
10	AS READ	AS READ	AS READ	AS READ	AS READ	AS READ	AS READ	AS READ	AS READ	AS READ

Off Axes PARTICULATE Measurements (cpm) using a Ludlum #44-40 Probe for a 30 Cubic Foot Air Sample
(miles)

mile	center line	0.1	0.2	0.3	0.4	0.5	0.6	0.7	0.8	0.9
0.5	AS READ	AS READ	AS READ	AS READ	AS READ	AS READ	AS READ	AS READ	AS READ	AS READ
1	AS READ	AS READ	AS READ	AS READ	AS READ	AS READ	AS READ	AS READ	AS READ	AS READ
2	AS READ	AS READ	AS READ	AS READ	AS READ	AS READ	AS READ	AS READ	AS READ	AS READ
5	AS READ	AS READ	AS READ	AS READ	AS READ	AS READ	AS READ	AS READ	AS READ	AS READ
7.5	AS READ	AS READ	AS READ	AS READ	AS READ	AS READ	AS READ	AS READ	AS READ	AS READ
10	AS READ	AS READ	AS READ	AS READ	AS READ	AS READ	AS READ	AS READ	AS READ	AS READ

Off Axes IODINE Measurements (cpm) using a Ludlum #44-40 Probe for a 10 Cubic Foot Air Sample
(miles)

mile	center line	0.1	0.2	0.3	0.4	0.5	0.6	0.7	0.8	0.9
0.5	AS READ	AS READ	AS READ	AS READ	AS READ	AS READ	AS READ	AS READ	AS READ	AS READ
1	AS READ	AS READ	AS READ	AS READ	AS READ	AS READ	AS READ	AS READ	AS READ	AS READ
2	AS READ	AS READ	AS READ	AS READ	AS READ	AS READ	AS READ	AS READ	AS READ	AS READ
5	AS READ	AS READ	AS READ	AS READ	AS READ	AS READ	AS READ	AS READ	AS READ	AS READ
7.5	AS READ	AS READ	AS READ	AS READ	AS READ	AS READ	AS READ	AS READ	AS READ	AS READ
10	AS READ	AS READ	AS READ	AS READ	AS READ	AS READ	AS READ	AS READ	AS READ	AS READ

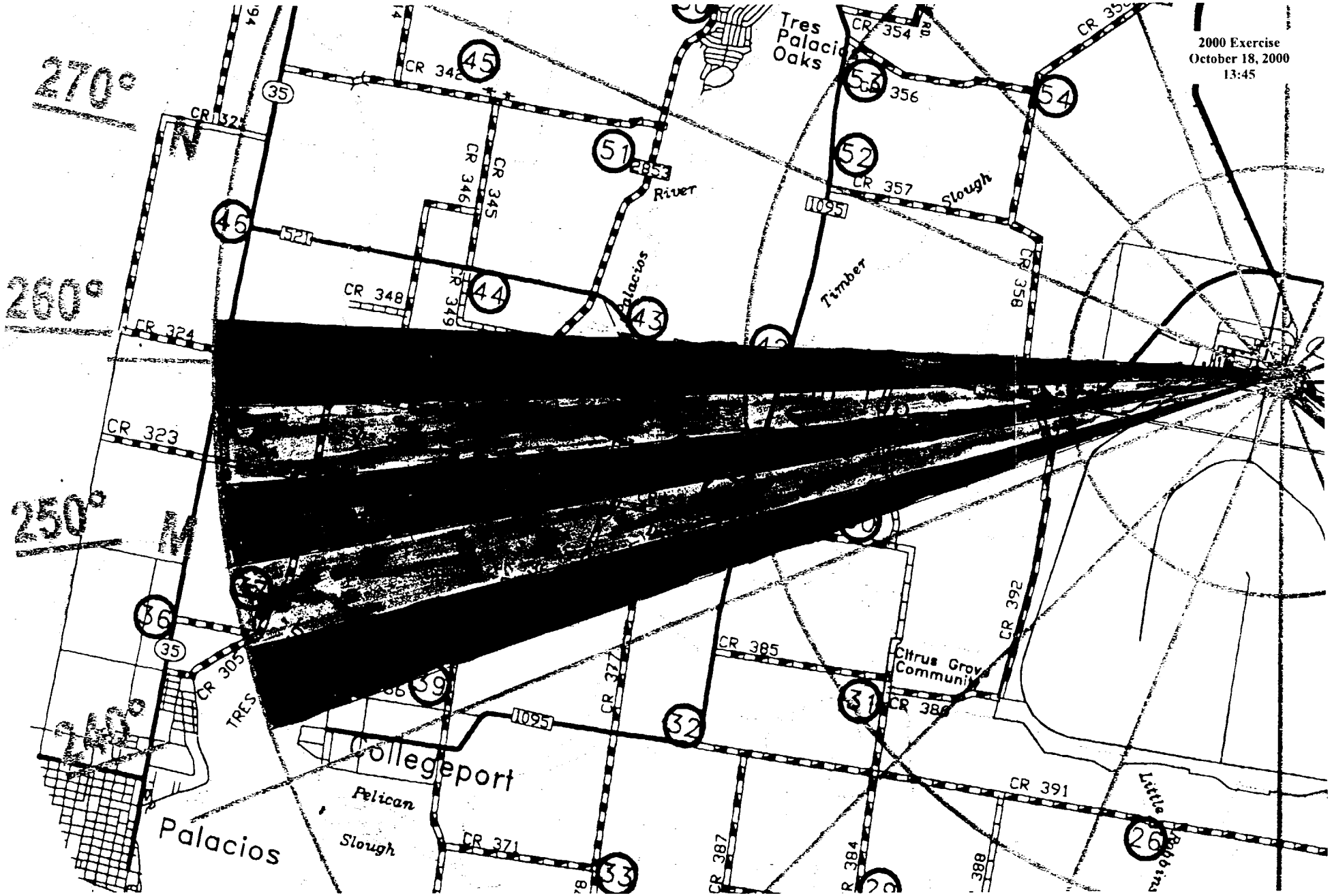
2000 Exercise
October 18, 2000
13:45
270°
260°
250°
240°
N
Tres Palacios Oaks
CR 354
CR 356
CR 357
CR 358
CR 342
CR 345
CR 346
CR 348
CR 349
CR 324
CR 323
CR 305
CR 385
CR 386
CR 391
CR 392
CR 377
CR 371
CR 387
CR 384
CR 388
521
1095
2853
35
Tres Palacios River
Timber Slough
Citrus Grove Community
Collegeport
Pelican Slough
Palacios
Little Robbins
45
51
52
53
54
46
44
43
36
39
32
31
33
26

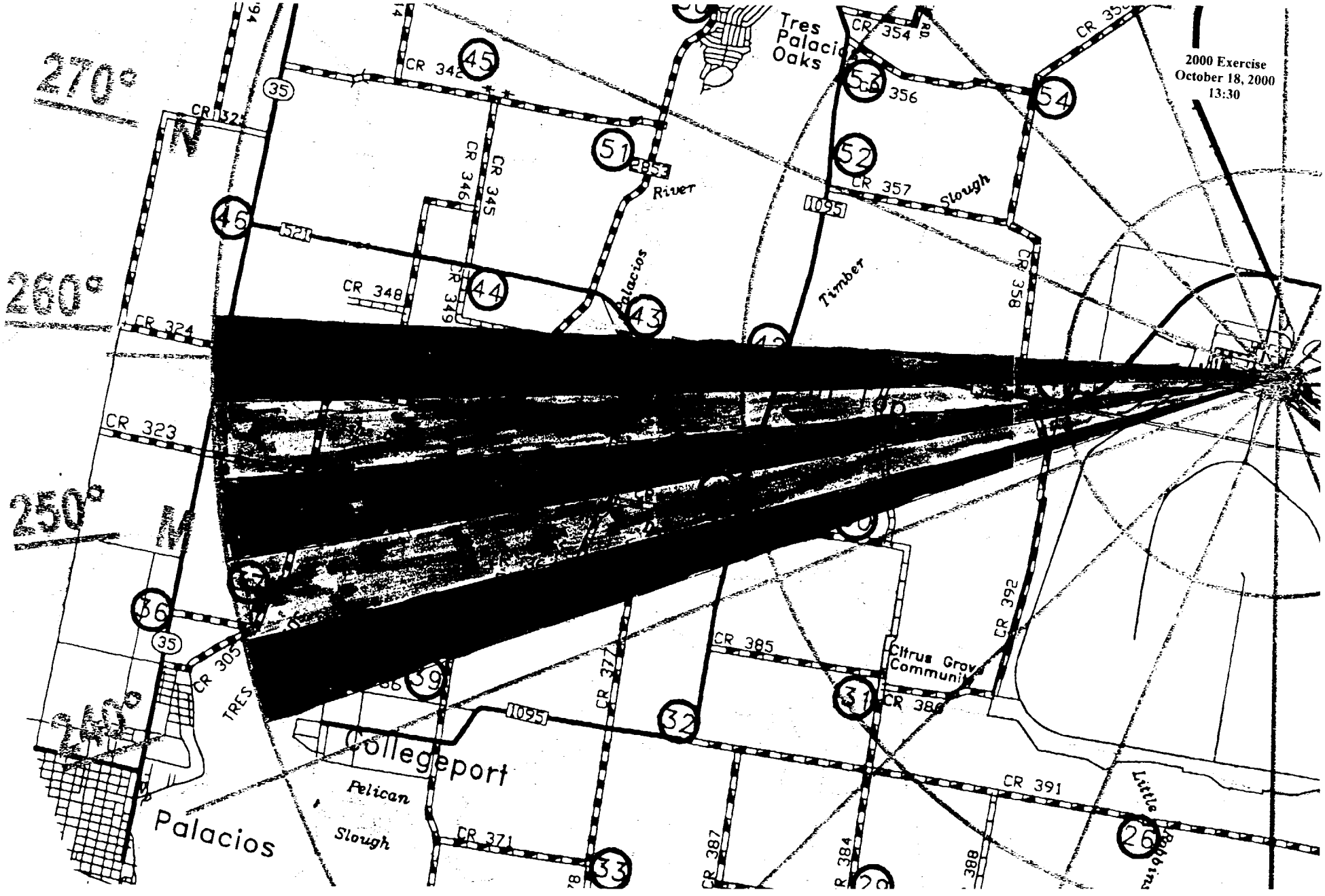
2000 Exercise
October 18, 2000
13:30
270°
260°
250°
240°
N
Tres Palacios Oaks
CR 354
CR 356
CR 357
CR 342
CR 324
CR 323
CR 348
CR 349
CR 346
CR 345
CR 358
CR 392
CR 385
CR 386
CR 391
CR 371
CR 387
CR 384
CR 388
CR 305
CR 377
Palacios River
Timber Slough
Citrus Grove Community
Little Robbins
Collegeport
Pelican Slough
Palacios
TRES
35
521
1095
45
46
44
43
51
52
54
36
32
31
33
26

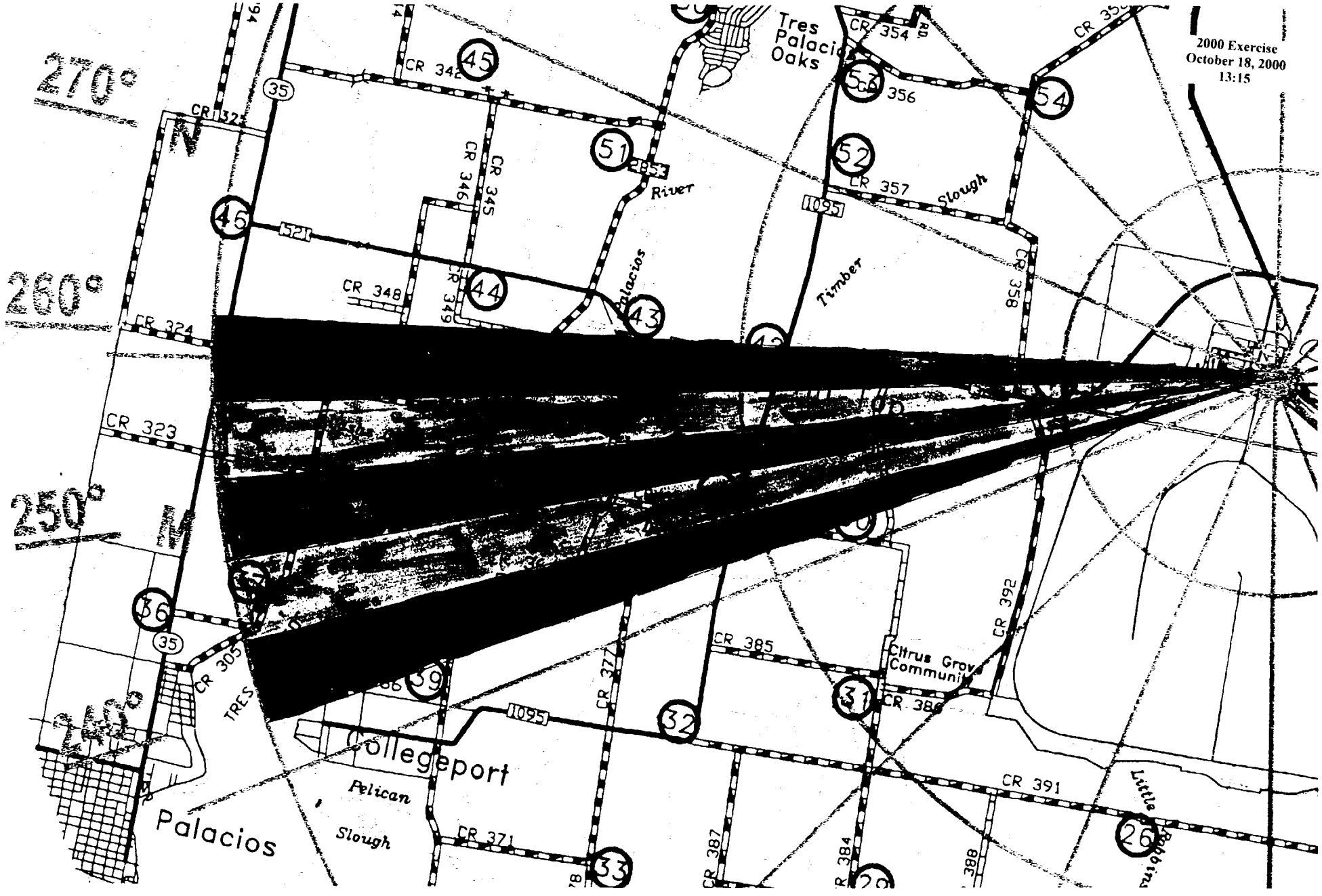
2000 Exercise
October 18, 2000
13:15
270°
260°
250°
240°
N
Tres Palacios Oaks
CR 354
CR 356
CR 357
CR 358
CR 342
CR 346
CR 345
CR 348
CR 349
CR 324
CR 323
CR 305
CR 385
CR 386
CR 392
CR 391
CR 371
CR 377
CR 387
CR 384
CR 388
521
1095
35
45
46
44
43
51
52
54
36
39
32
31
33
26
River
Palacios
Timber
Slough
Citrus Grove Community
Collegeport
Pelican
Slough
Palacios
TRES
Little

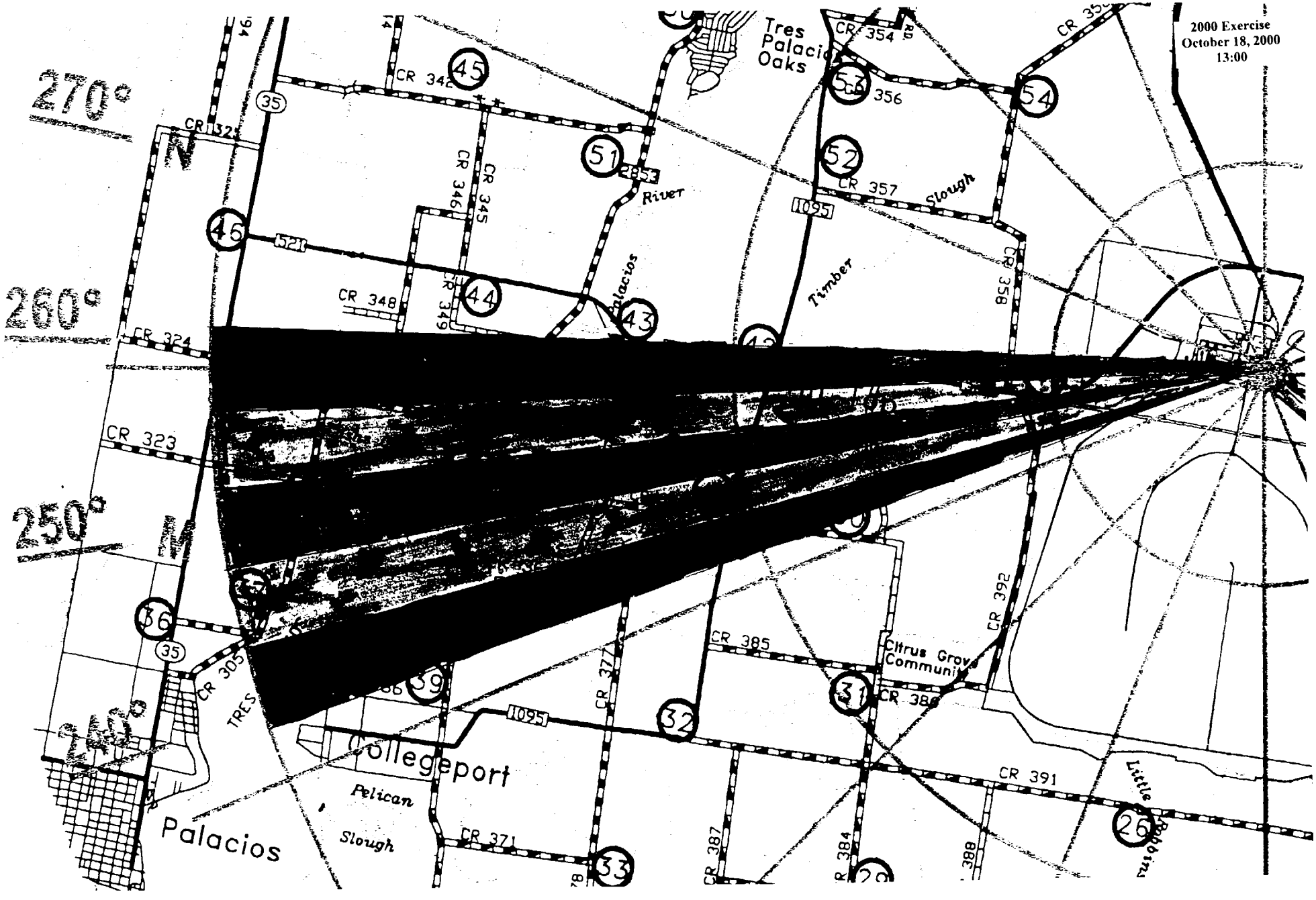
2000 Exercise
October 18, 2000
13:00
270°
260°
250°
240°
N
Tres Palacios Oaks
CR 354
CR 356
CR 357
CR 358
CR 345
CR 346
CR 348
CR 349
CR 324
CR 323
CR 305
CR 385
CR 386
CR 387
CR 391
CR 392
CR 371
CR 384
CR 388
1095
521
35
Palacios River
Timber Slough
Citrus Grove Community
Little Robbins
Collegeport
Pelican Slough
Palacios
TRES
45
51
52
54
46
44
43
36
39
32
31
33
26

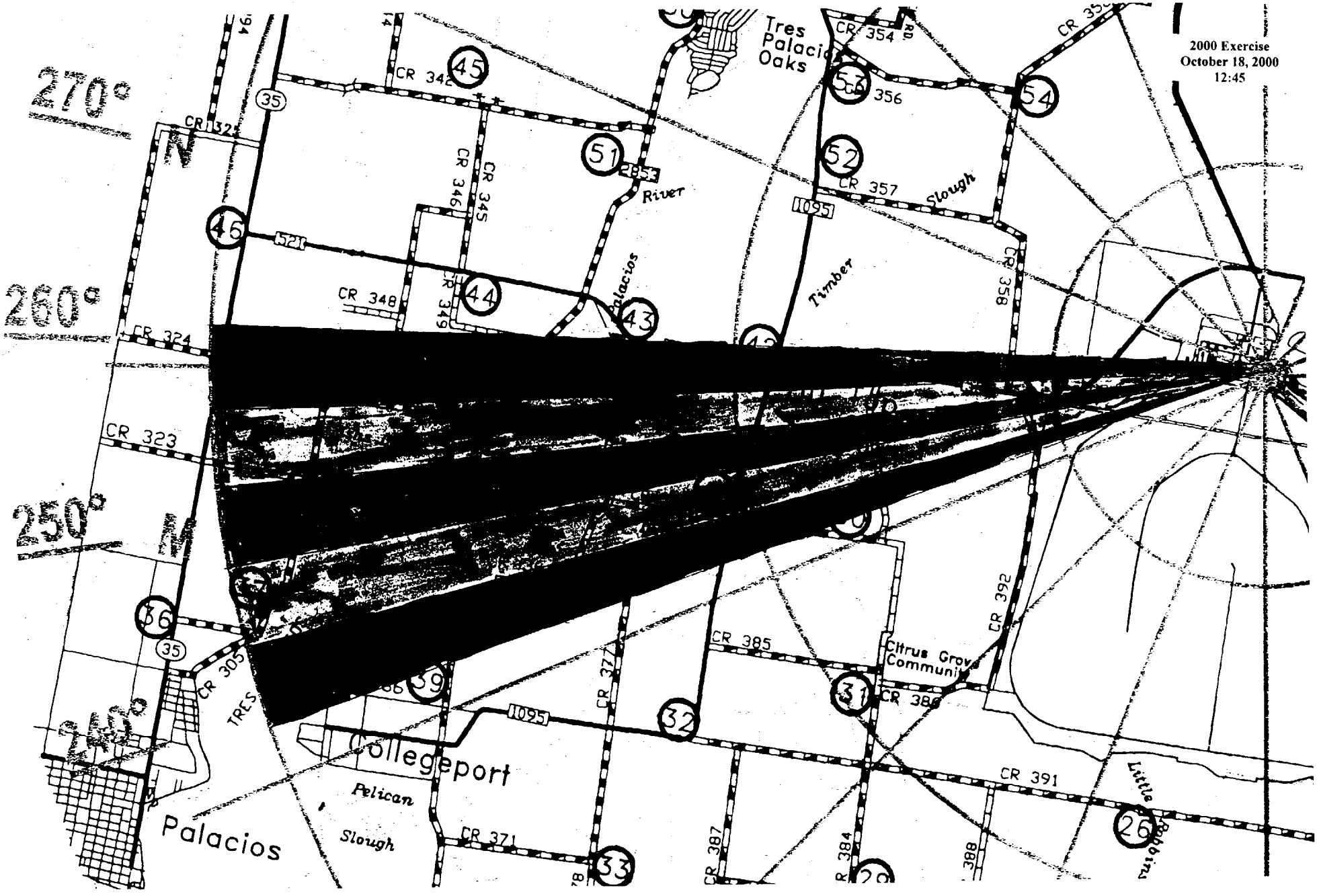
2000 Exercise
October 18, 2000
12:45
270°
260°
250°
240°
N
CR 324
CR 323
CR 342
CR 346
CR 345
CR 348
CR 354
CR 356
CR 357
CR 358
CR 392
CR 385
CR 386
CR 391
CR 371
CR 387
CR 384
CR 388
CR 305
CR 377
35
521
2853
1095
45
51
46
44
43
54
52
36
32
31
33
26
Tres Palacios Oaks
River
Palacios
Timber
Slough
Citrus Grove Community
Little Robbins
Collegeport
Pelican
Slough
Palacios
TRES

2000 Exercise
October 18, 2000
12:30

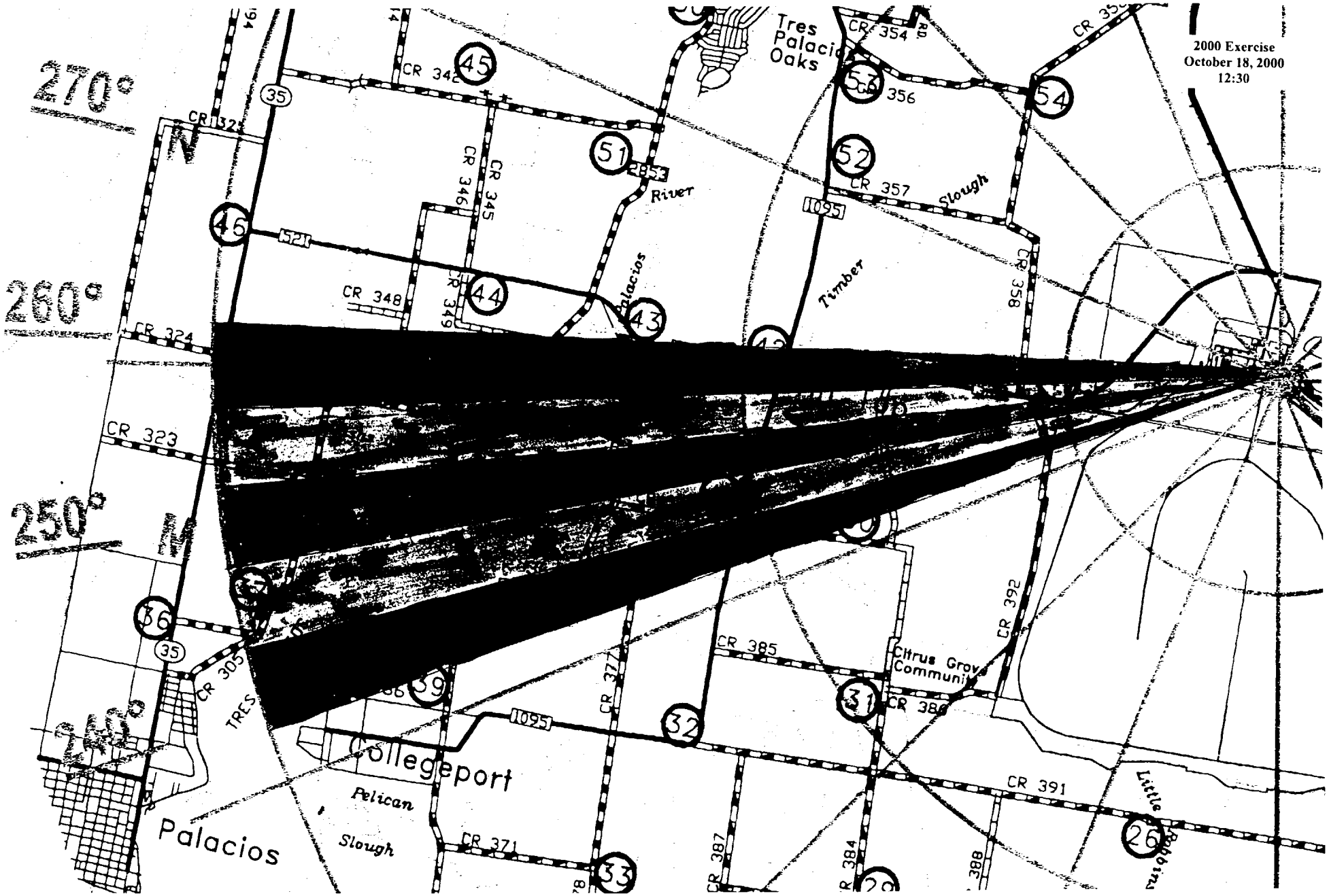

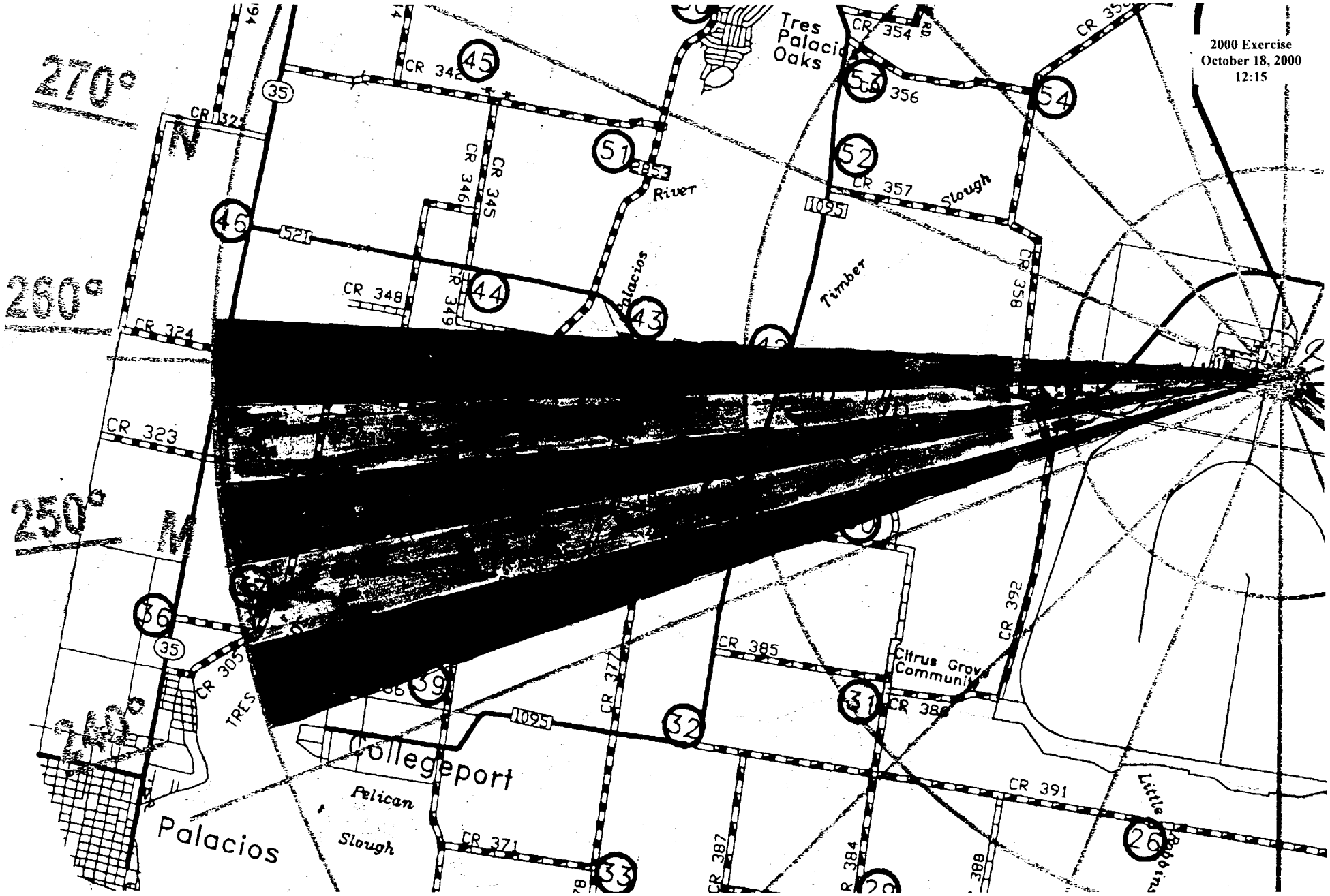
2000 Exercise
October 18, 2000
12:15
270°
260°
250°
240°
N
M
CR 342
CR 324
CR 323
CR 348
CR 346
CR 345
CR 349
CR 357
CR 356
CR 354
CR 358
CR 392
CR 385
CR 386
CR 391
CR 377
CR 371
CR 387
CR 384
CR 305
TRES
Tres Palacios Oaks
Palacios River
Timber Slough
Pelican Slough
Collegeport
Palacios
Citrus Grove Community
Little
35
1095
521
2853

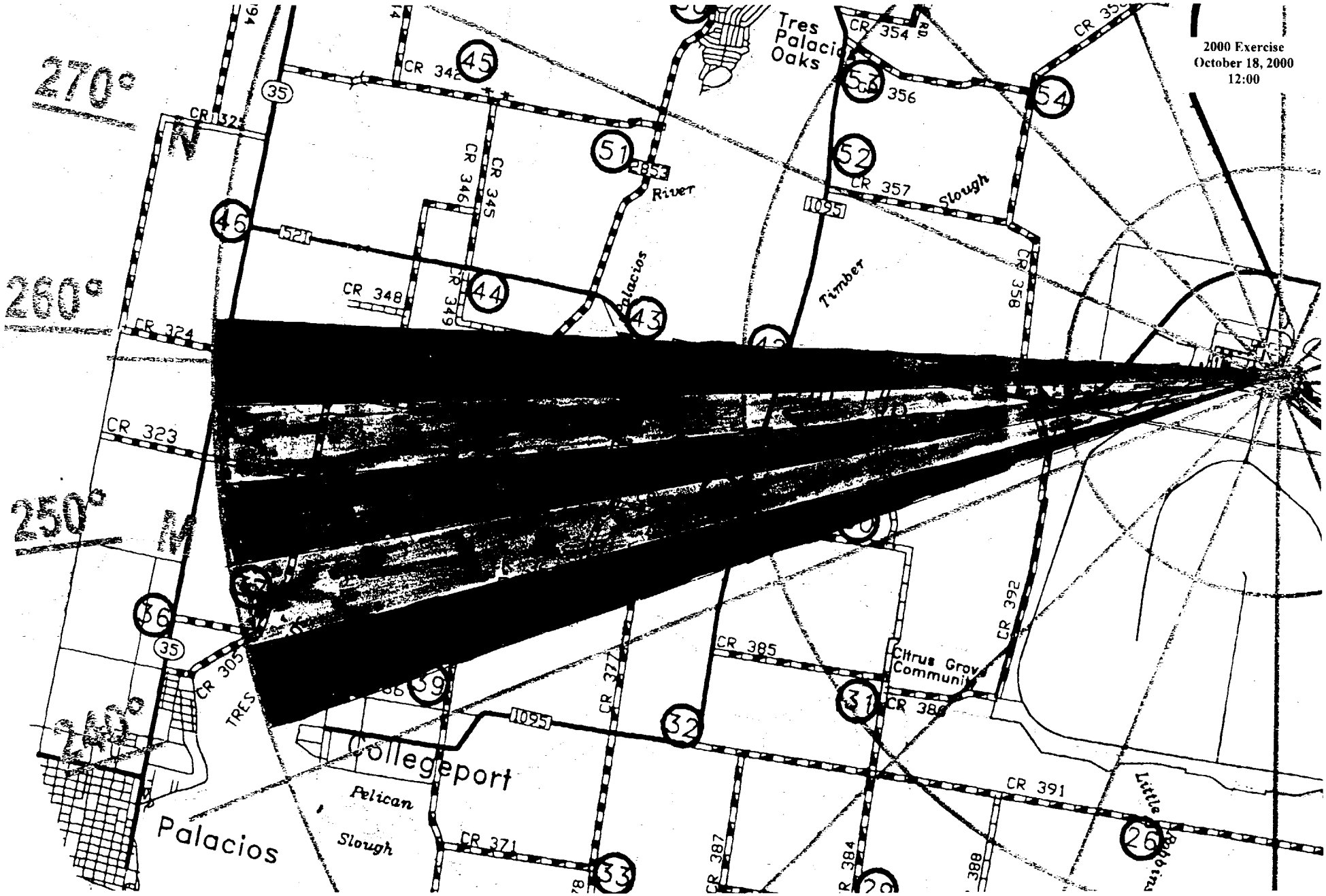
2000 Exercise
October 18, 2000
12:00
270°
260°
250°
N
M
CR 324
CR 323
CR 348
CR 346
CR 345
CR 342
CR 357
CR 358
CR 354
CR 356
CR 392
CR 385
CR 377
CR 371
CR 387
CR 384
CR 391
CR 305
CR 388
35
521
2853
1095
Tres Palacios Oaks
River
Palacios
Timber
Slough
Citrus Grove Community
Collegeport
Pelican
Slough
Palacios
Little
51
52
53
54
46
44
43
36
35
32
31
33
26

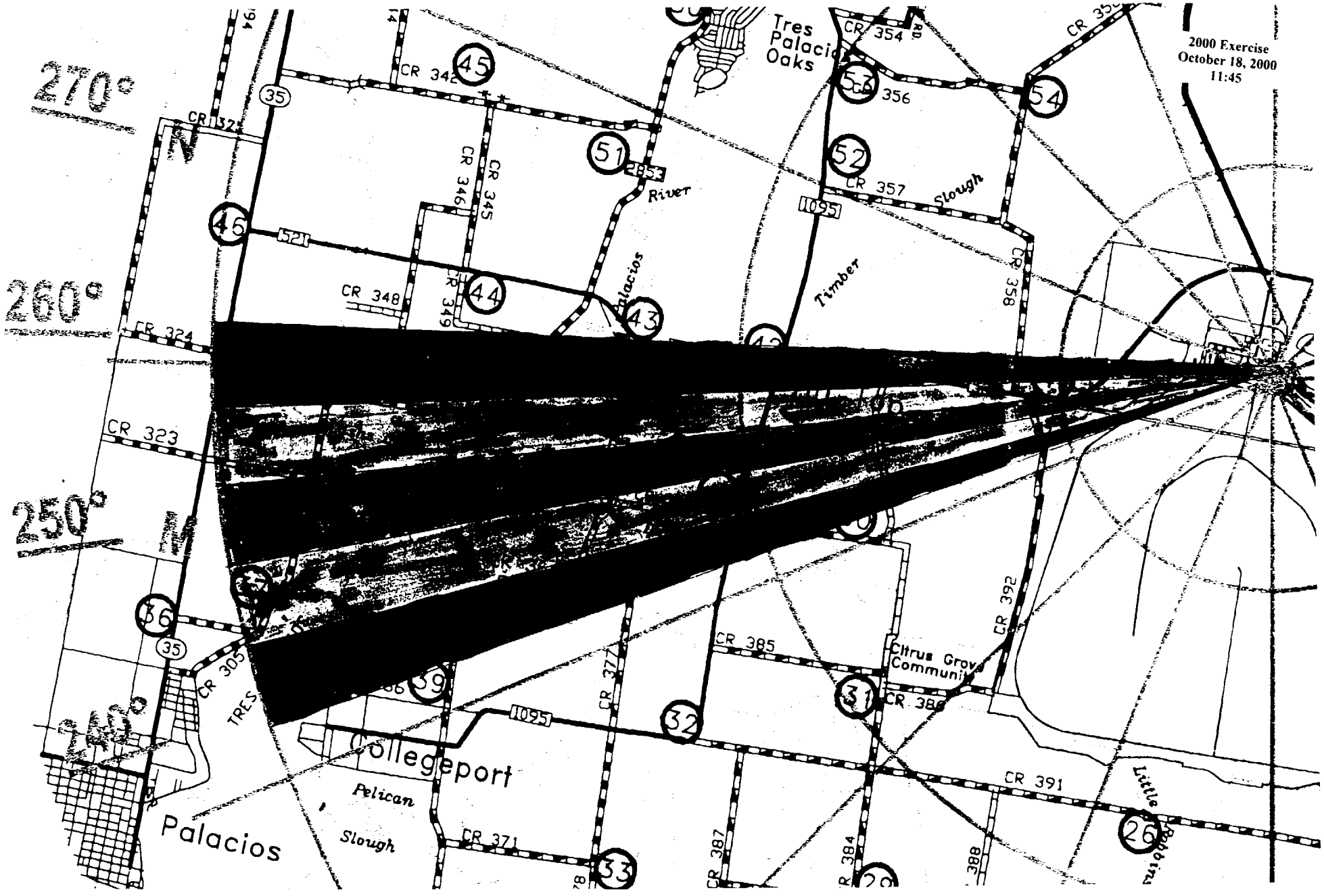
2000 Exercise
October 18, 2000
11:45
270°
260°
250°
240°
N
M
Tres Palacios Oaks
CR 354
CR 356
CR 357
CR 358
CR 342
CR 345
CR 346
CR 348
CR 349
CR 324
CR 323
CR 305
CR 377
CR 385
CR 386
CR 392
CR 391
CR 371
CR 387
CR 384
CR 388
521
1095
35
2853
River
Palacios
Timber
Slough
Citrus Grove Community
Collegeport
Pelican
Slough
Palacios
Little
45
51
52
53
54
46
44
43
36
39
32
31
33
26

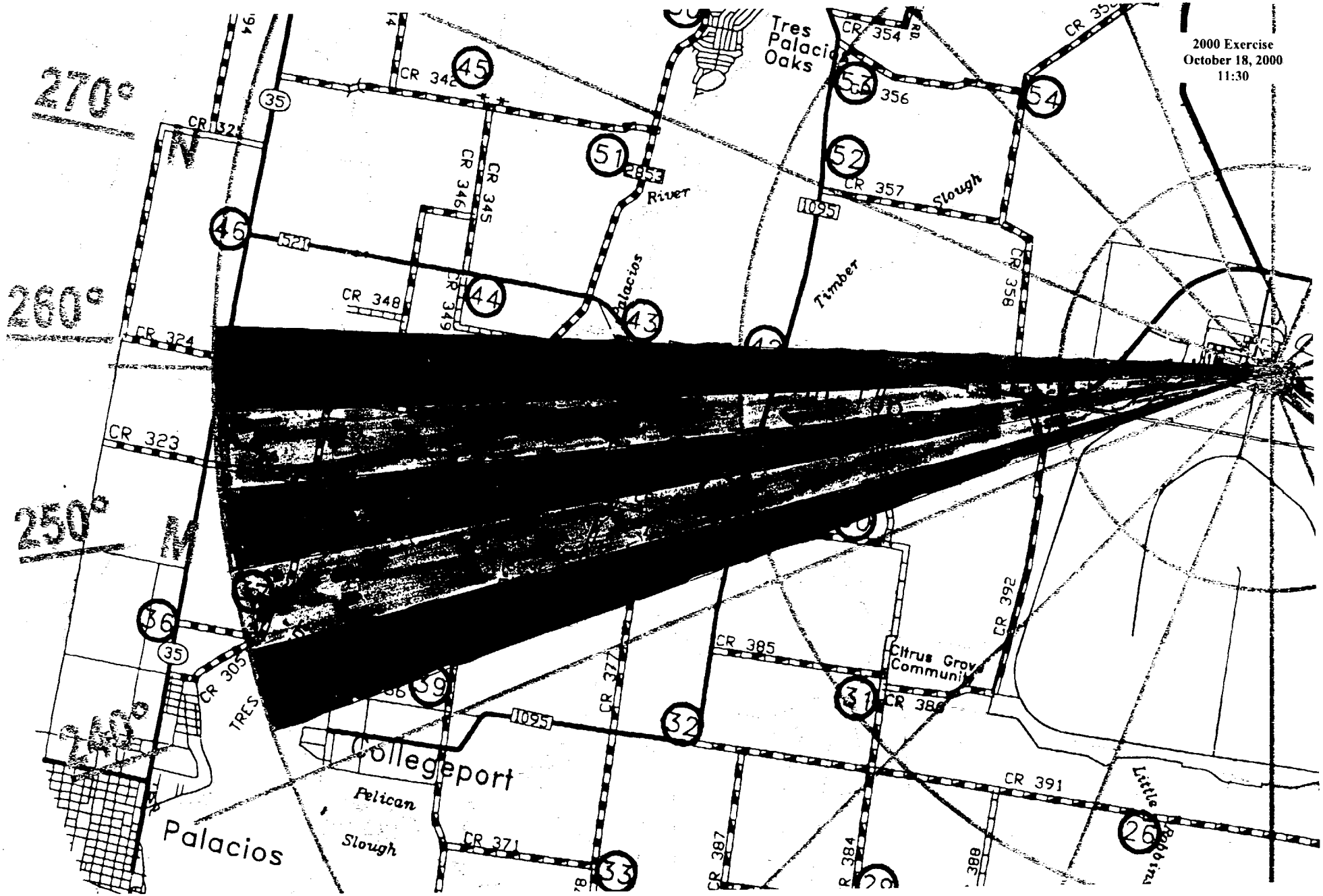
2000 Exercise
October 18, 2000
11:30
270°
260°
250°
240°
N
Tres Palacios Oaks
CR 354
CR 356
CR 357
CR 358
CR 342
CR 346
CR 345
CR 348
CR 349
CR 324
CR 323
CR 305
CR 385
CR 386
CR 391
CR 392
CR 371
CR 377
CR 387
CR 384
CR 388
521
1095
35
Palacios River
Timber Slough
Pelican Slough
Collegeport
Palacios
Citrus Grove Community
Little Robbins
45
46
44
43
51
52
54
36
39
32
31
33
26

PAMS 5/15/7189

QUAL PAMS

T W/R

LP A 562 F

LP B 562 F

LP C 562 F

LP D 562 F

RCS PRESS 2244 PSIG

MAX QUAD T/C AVG 628 F

SUBCOOL 24 F

RVWI

UPPER HD 100 %

PLENUM 100 %

PRZL LVL 55.4 %

Th W/R 622 F

AFW FLOW

0 GPM

0 GPM

0 GPM

0 GPM

SG PRESS

1060 PSIG

1060 PSIG

1060 PSIG

1060 PSIG

SG LVL

W/R 62.2 %
N/R 70.7 %

W/R 62.2 %
N/R 70.7 %

W/R 62.2 %
N/R 70.7 %

W/R 62.2 %
N/R 70.7 %

622 F

622 F

622 F

622 F

NUC PWR

UPPER RNG FLUX	1.0E2	%
LOWER RNG FLUX	1.0E11PN	CPS
SUR	0.0	DPM

CNTMT

PRESS	0.0	PSIG
EXTD RNG PRESS	0	PSIG
WTR LVL W/R AUXT HI	0	IN
NORM SUMP LVL	7	IN
SEC SUMP LVL	2	IN
H2 CONC	0.0	%
HI RNG RAD	9.6E-1	R/HR

TK LVL	KGAL
RWST	514
AFWST	518

SEC RAD uCi/cc

SG	BLWDN	STM LN
A	2.64E-4	1.39E-2
B	2.64E-4	1.39E-2
C	2.64E-4	1.39E-2
D	2.64E-4	1.39E-2

S C H P Z I R TOP

C1

4.16 KV CLASS-1E

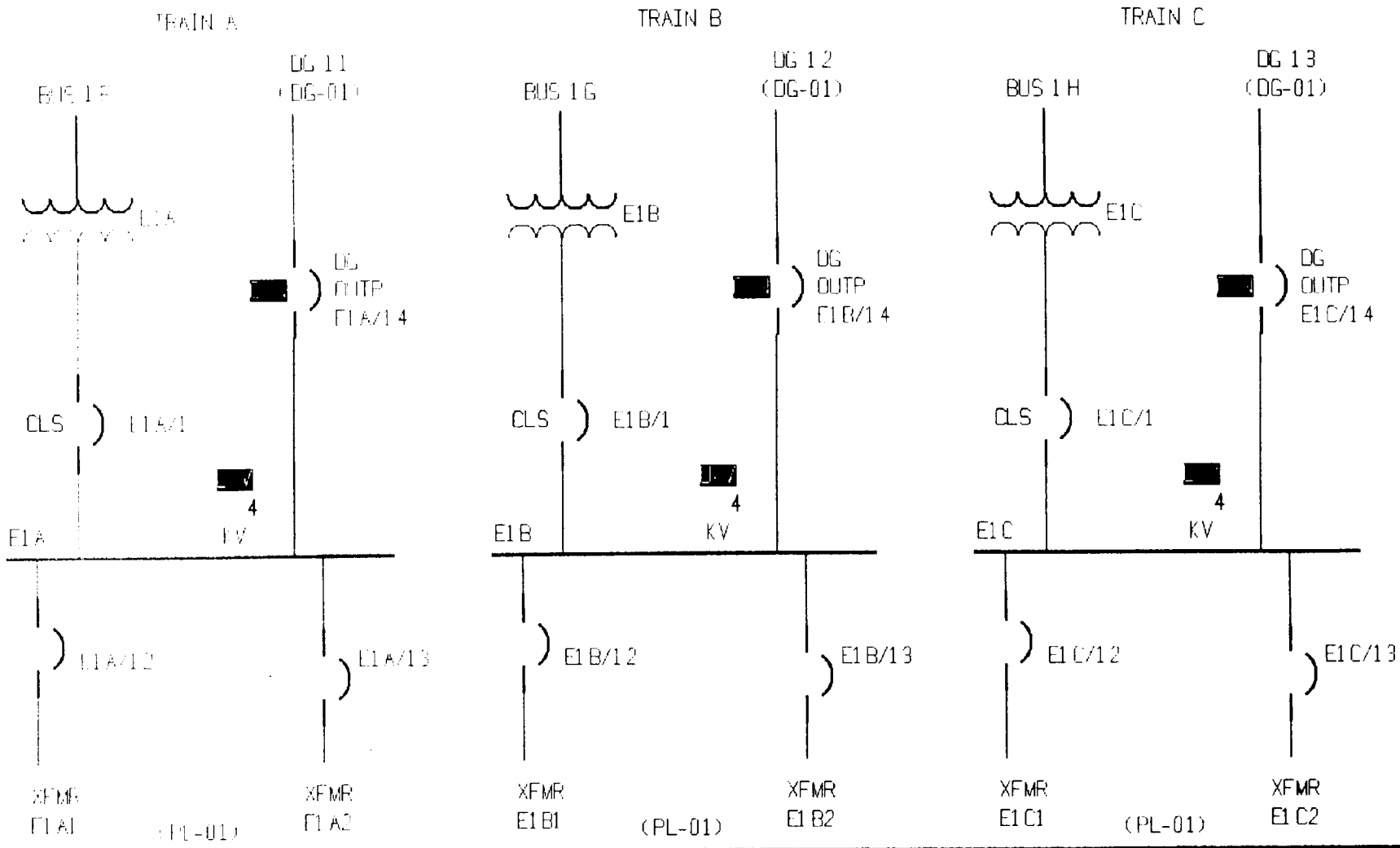

S C H P Z I R TOP

C2

ESF DG SUMMARY

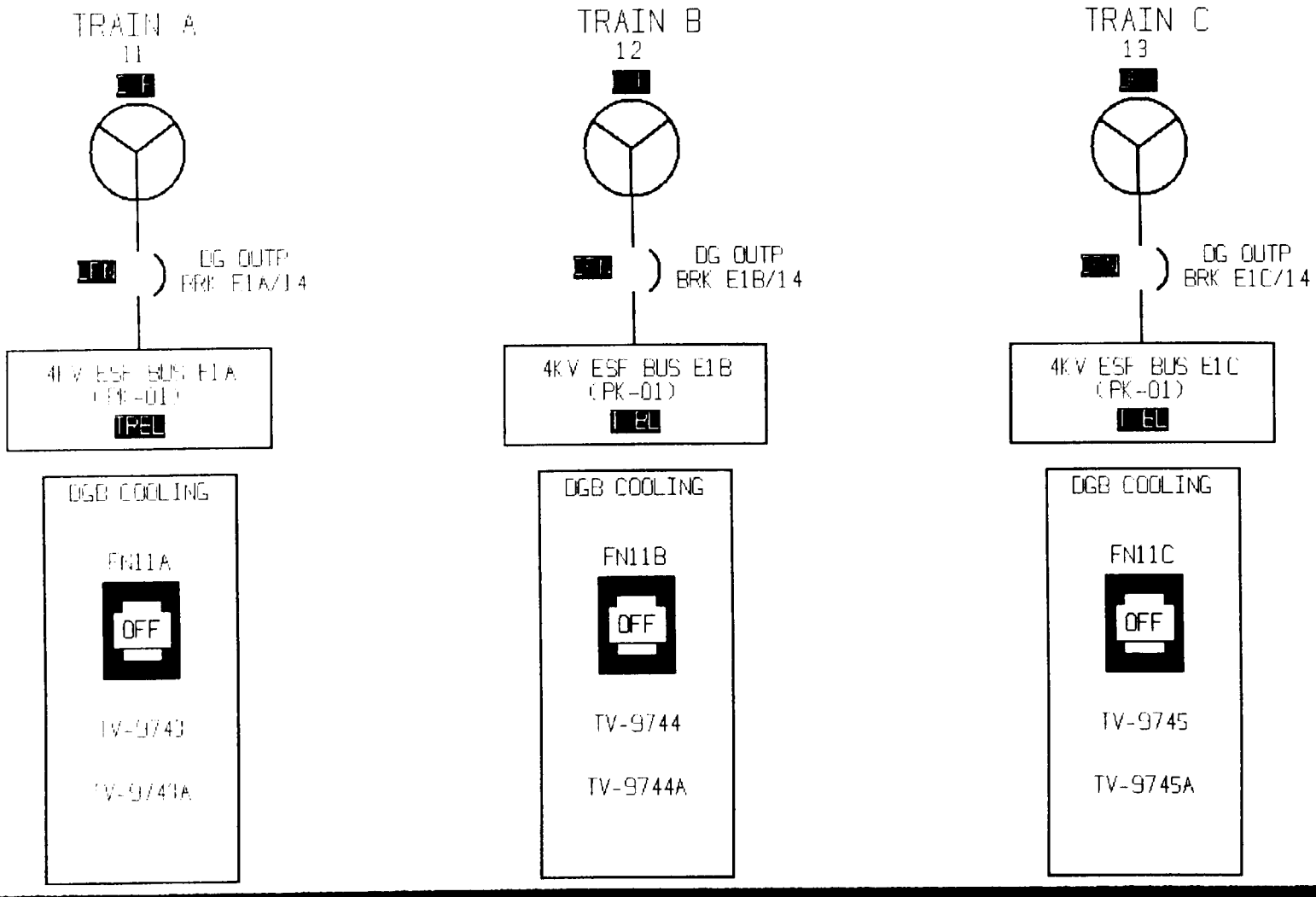

C3

PAMS 6/35/7169

QUAL PAMS

Tc W/R

LP A

562 F

LP B

562 F

LP C

562 F

LP D

562 F

RCS PRESS

2244 PSIG

MAX QUAD T/C AVG 628 F

SUBCOOL 24 F

RVWL

UPPER HD 100 %

PLENUM 100 %

PRZL LVL

55.4 %

Th W/R

AFW FLOW

SG PRESS

0 GPM 1060 PSIG

SG LVL

622 F W/R 62.2 %

N/R 70.7 %

0 GPM 1060 PSIG

622 F W/R 62.2 %

N/R 70.7 %

0 GPM 1060 PSIG

622 F W/R 62.2 %

N/R 70.7 %

0 GPM 1060 PSIG

622 F W/R 62.2 %

N/R 70.7 %

NUC PWR

UPPER RNG FLUX	1.0E2	%
LOWER RNG FLUX	1.0E11PN	CPS
SUR	0.0	DPM

CNTMT

PRESS	0.0	PSIG
PSTD RNG PRESS	0	PSIG
WTR LVL W/R ABOVE HC	0	IN
NORM SUMP LVL	7	IN
SEC SUMP LVL	2	IN
HC CONC	0.0	%
HI RNG RAD	9.6E-1	R/HR

TK LVL	KGAL
RWST	514
AFWST	518

SEC RAD uCi/cc

SG	BLWDN	SIM LN
A	2.64E-4	1.39E-2
B	2.64E-4	1.39E-2
C	2.64E-4	1.39E-2
D	2.64E-4	1.39E-2

S C H P Z I R TOP

C4

NRAD (8015)

RADIOACTIVITY STATUS [R]

UNIT 1

RCB PURGE

	uCi/cc
RT-8012	1.6E-6
RT-8013	1.2E-6

CR/EAB VENT

	uCi/cc
RT-8033	1.7E-6
RT-8034	1.4E-6

SFP EXHAUST

	uCi/cc
RT-8035	1.2E-6
RT-8036	1.0E-6

UNIT 1 VENT
(RT-8010)

	uCi/cc
PARTICULATE	4.0E-11
IODINE	2.1E-11
NOBLE GAS	0.0E0PN
	uCi/sec
RELEASE RATE	2.7E1

RCB ATMOSPHERE
(RT-8011)

	uCi/cc
PARTICULATE	1.3E-9
IODINE	3.3E-12
NOBLE GAS	7.8E-6

CNTMT HI RANGE

	R/HR
RT-8050	1.1E0
RT-8051	7.6E-1PN

LNDSCAPE VAC PUMP
(RT-8027)

	uCi/cc
NOBLE GAS	0.0E0PN
	uCi/sec
RELEASE RATE	3.7E-3

STM LINE
(RT-8046 thru 8049)

	uCi/cc
SG A	1.3E-2
SG B	1.3E-2
SG C	1.3E-2
SG D	1.3E-2

SG BLOWDOWN
(RT-8022 thru 8025)

	uCi/cc
SG A	2.6E-4
SG B	2.6E-4
SG C	2.6E-4
SG D	2.6E-4

S C H P Z I R TOP

C5

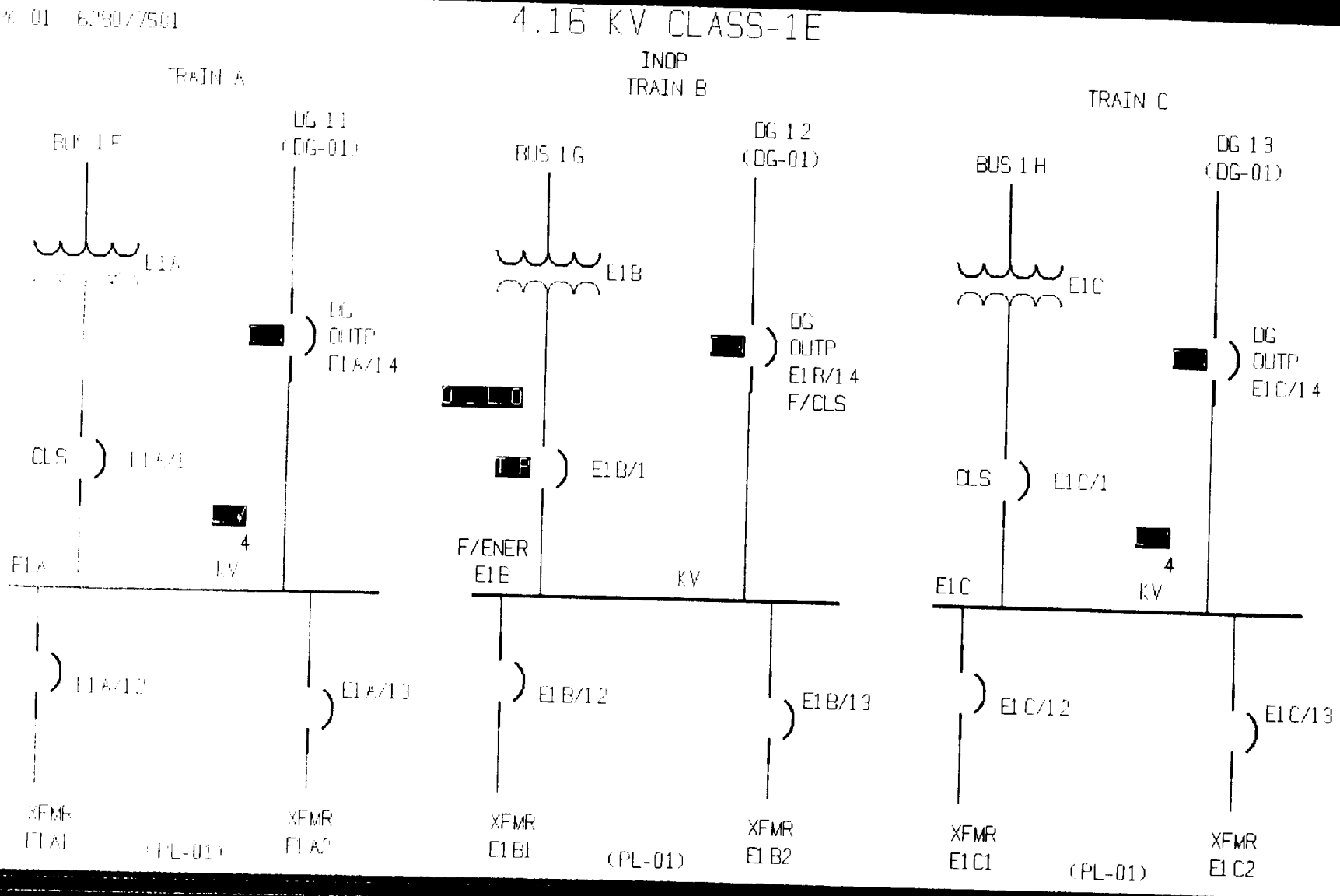

S C H P Z I R TOP

C6

AMS 8/25/7159

QUAL PAMS

W/R

LP A

562 F

LP B

562 F

LP C

562 F

LP D

562 F

RCS PRESS

2255 PSIG

MAX QUAD T/C AVG 628 F

SUBCOOL 25 F

RVWI

UPPER HD 100 %

PLENUM 100 %

PRZL LVL

55.4 %

Th W/R

AFW FLOW

SG PRESS

0 GPM	622 F	1060 PSIG	SG LVL	W/R 62.2 %	N/R 70.7 %
0 GPM	622 F	1060 PSIG		W/R 62.2 %	N/R 70.7 %
0 GPM	622 F	1060 PSIG		W/R 62.2 %	N/R 70.7 %
0 GPM	622 F	1060 PSIG		W/R 62.2 %	N/R 70.7 %

NUC PWR

UPPER RNG FLUX	1.0E2	%
LOWER RNG FLUX	1.0E11PN	CPS
SUR	0.0	DPM

CNTMT

[illegible]	0.2	PSIG
[illegible] RNG PRESS	0	PSIG
[illegible] W/R [illegible]	0	IN
[illegible]	7	IN
[illegible] SUMP LVL	2	IN
[illegible]	0.0	%
[illegible] RNG RAD	9.6E-1	R/HR

TK LVL KGAL

RWST	514
AFWST	518

SEC RAD uCi/cc

SG	BLWDN	STM LN
A	2.64E-4	1.39E-2
B	2.64E-4	1.39E-2
C	2.64E-4	1.39E-2
D	2.64E-4	1.39E-2

S C H P Z I R TOP

C7

NRAD (8015)

RADIOACTIVITY STATUS [R]

UNIT 1

RCB PURGE

	uCi/cc
RT-8012	1.6E-6
RT-8013	1.2E-6

CR/EAB VENT

	uCi/cc
RT-8033	1.7E-6
RT-8034	1.4E-6

SFP EXHAUST

	uCi/cc
RT-8035	1.2E-6
RT-8036	1.0E-6

UNIT VENT (RT-8010)

	uCi/cc
PARTICULATE	4.0E-11
IODINE	2.1E-11
NOBLE GAS	0.0E0PN
	uCi/sec
RELEASE RATE	2.6E1

RCB ATMOSPHERE (RT-8011)

	uCi/cc
PARTICULATE	1.3E-9
IODINE	3.3E-12
NOBLE GAS	7.8E-6

CNTMT HI RANGE

	R/HR
RT-8050	1.1E0
RT-8051	7.6E-1PN

CONDENSER AIR EJECTOR (RT-8027)

	uCi/cc
NOBLE GAS	0.0E0PN
	uCi/sec
RELEASE RATE	3.7E-3

STM LINE (RT-8046 thru 8049)

	uCi/cc
SG A	1.3E-2
SG B	1.3E-2
SG C	1.3E-2
SG D	1.3E-2

SG BLOWDOWN (RT-8022 thru 8025)

	uCi/cc
SG A	2.6E-4
SG B	2.6E-4
SG C	2.6E-4
SG D	2.6E-4

C8

-01 6210/2301

ESF DG SUMMARY

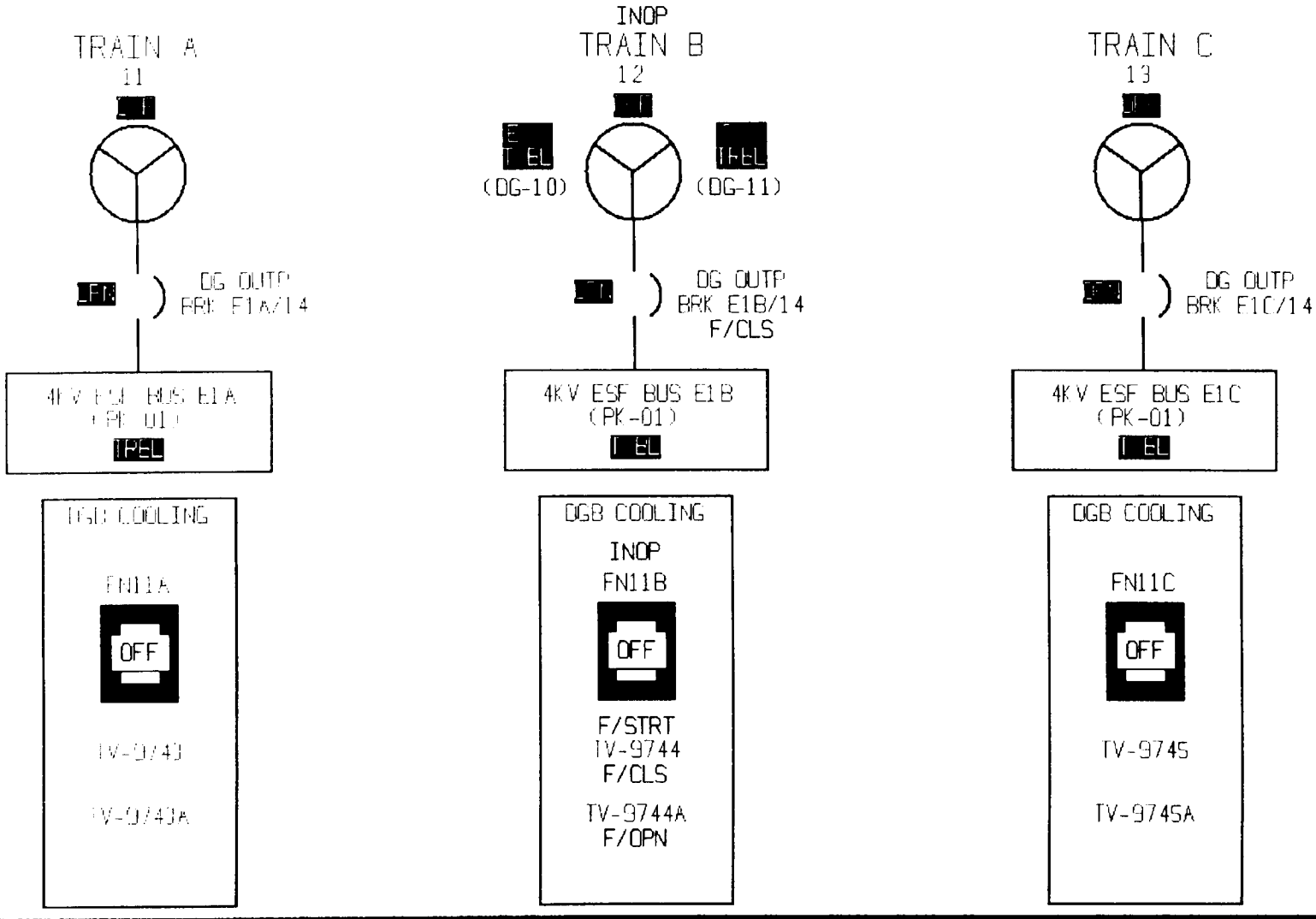

S C H P Z I R TOP

C9

AMS 6135/7169

QUAL PAMS

Tc W/R		
LP A	562	F
LP B	562	F
LP C	562	F
LP D	562	F

RCS PRESS 2248 PSIG

MAX QUAD T/C AVG 628 F
SUBCOOL 25 F

RVWL
UPPER HD 100 %
PLENUM 100 %

PRZL LVL 55.4 %

Th W/R 622 F

AFW FLOW

0 GPM		
622 F		
0 GPM		
622 F		
0 GPM		
622 F		
0 GPM		
622 F		

SG PRESS

1060	PSIG	
SG LVL		
W/R	62.2	%
N/R	70.7	%
1060	PSIG	
W/R	62.2	%
N/R	70.7	%
1060	PSIG	
W/R	62.2	%
N/R	70.7	%
1060	PSIG	
W/R	62.2	%
N/R	70.7	%

NUC PWR

UPPER RNG FLUX	1.0E2	%
LOWER RNG FLUX	1.0E11PN	CPS
SUR	-0.0	DPM

LNTMT

[illegible]	0.2	PSIG
[illegible] RNG PRESS	0	PSIG
[illegible] W/R [illegible] HT	0	IN
[illegible] SUMP LVL	8	IN
SEC SUMP LVL	2	IN
[illegible] CONC	0.0	%
[illegible] RNG RAD	9.6E-1	R/HR

TK LVL	KGAL
RWST	514
AFWST	518

SEC RAD uCi/cc

SG	BLWDN	STM LN
A	2.64E-4	1.39E-2
B	2.64E-4	1.39E-2
C	2.64E-4	1.39E-2
D	2.64E-4	1.39E-2

S C H P Z I R TOP

C10

NRAD (8015)

RADIOACTIVITY STATUS [R]

UNIT 1

RCB PURGE

	uCi/cc
RT-8012	1.6E-6
RT-8013	1.2E-6

CR/EAB VENT

	uCi/cc
RT-8033	1.7E-6
RT-8034	1.4E-6

SFP EXHAUST

	uCi/cc
RT-8035	1.2E-6
RT-8036	1.0E-6

UNIT VENT
(RT-8010)

	uCi/cc
PARTICULATE	4.0E-11
IODINE	2.1E-11
NOBLE GAS	0.0E0PN
	uCi/sec
RELEASE RATE	2.6E1

RCB ATMOSPHERE
(RT-8011)

	uCi/cc
PARTICULATE	1.3E-9
IODINE	3.2E-12
NOBLE GAS	7.8E-6

CNTMT HI RANGE

	R/HR
RT-8050	1.1E0
RT-8051	7.6E-1PN

UNIT 2 VAC PUMP
(RT-8027)

	uCi/cc
NOBLE GAS	0.0E0PN
	uCi/sec
RELEASE RATE	3.7E-3

STM LINE
(RT-8046 thru 8049)

	uCi/cc
SG A	1.3E-2
SG B	1.3E-2
SG C	1.3E-2
SG D	1.3E-2

SG BLOWDOWN
(RT-8022 thru 8025)

	uCi/cc
SG A	2.6E-4
SG B	2.6E-4
SG C	2.6E-4
SG D	2.6E-4

S C H P Z I R TOP

C11

AMS 6135/7169

QUAL PAMS

Tc W/R

LP A

562 F

LP B

562 F

LP C

562 F

LP D

562 F

RCS PRESS

2244 PSIG

MAX QUAD T/C AVG 628 F

SUBCOOL 24 F

RVWI

UPPER HD 100 %

PLENUM 100 %

PRZL LVL

55.4 %

Th W/R

AFW FLOW

0 GPM

622 F

SG PRESS

1060 PSIG

SG LVL

W/R 62.2 %

N/R 70.7 %

0 GPM

622 F

1060 PSIG

W/R 62.2 %

N/R 70.7 %

0 GPM

622 F

1060 PSIG

W/R 62.2 %

N/R 70.7 %

0 GPM

622 F

1060 PSIG

W/R 62.2 %

N/R 70.7 %

NUC PWR

UPPER RNG FLUX	1.0E2	%
LOWER RNG FLUX	1.0E11PN	CPS
SUR	0.0	DPM

CNTMT

[illegible]	0.0	PSIG
[illegible] RNG [illegible]	0	PSIG
WTR LVL W/R AUX FT	0	IN
NORM SUMP LVL	8	IN
SEC SUMP LVL	2	IN
H2 CONC	0.0	%
HI RNG RAD	9.6E-1	R/HR

TK LVL	KGAL
RWST	514
AFWST	518

SEC RAD uCi/cc

SG	BLWDN	STM LN
A	2.64E-4	1.39E-2
B	2.64E-4	1.39E-2
C	2.64E-4	1.39E-2
D	2.64E-4	1.39E-2

S C H P Z I R TOP

C12

NRAD (8015)

RADIOACTIVITY STATUS [R]

UNIT 1

RCB PURGE

	uCi/cc
RT-8012	1.6E-6
RT-8013	1.2E-6

CR/EAB VENT

	uCi/cc
RT-8033	1.7E-6
RT-8034	1.4E-6

SFP EXHAUST

	uCi/cc
RT-8035	1.2E-6
RT-8036	1.0E-6

UNIT 1 VENT
(RT-8010)

	uCi/cc
PARTICULATE	4.0E-11
IODINE	2.1E-11
NOBLE GAS	0.0E0PN
	uCi/sec
RELEASE RATE	2.7E1

RCB ATMOSPHERE
(RT-8011)

	uCi/cc
PARTICULATE	1.3E-9
IODINE	3.2E-12
NOBLE GAS	7.8E-6

CNTMT HI RANGE

	R/HR
RT-8050	1.1E0
RT-8051	7.6E-1PN

PRIMARY VAL PUMP
(RT-8023)

	uCi/cc
NOBLE GAS	0.0E0PN
	uCi/sec
RELEASE RATE	3.7E-3

STM LINE
(RT-8046 thru 8049)

	uCi/cc
SG A	1.3E-2
SG B	1.3E-2
SG C	1.3E-2
SG D	1.3E-2

SG BLOWDOWN
(RT-8022 thru 8025)

	uCi/cc
SG A	2.6E-4
SG B	2.6E-4
SG C	2.6E-4
SG D	2.6E-4

TOP-N
(5016)

NORMAL SAFETY PARAMETERS

UNIT 1

ALARM

WARNING

NORMAL

S	C	H	P	Z	I	R
NSF-S	NSF-C	NSF-H	NSF-P	NSF-Z	NSF-I	RAD

RX TRIP BKR

R

CLS CLS

S C H P Z I R TOP

C14

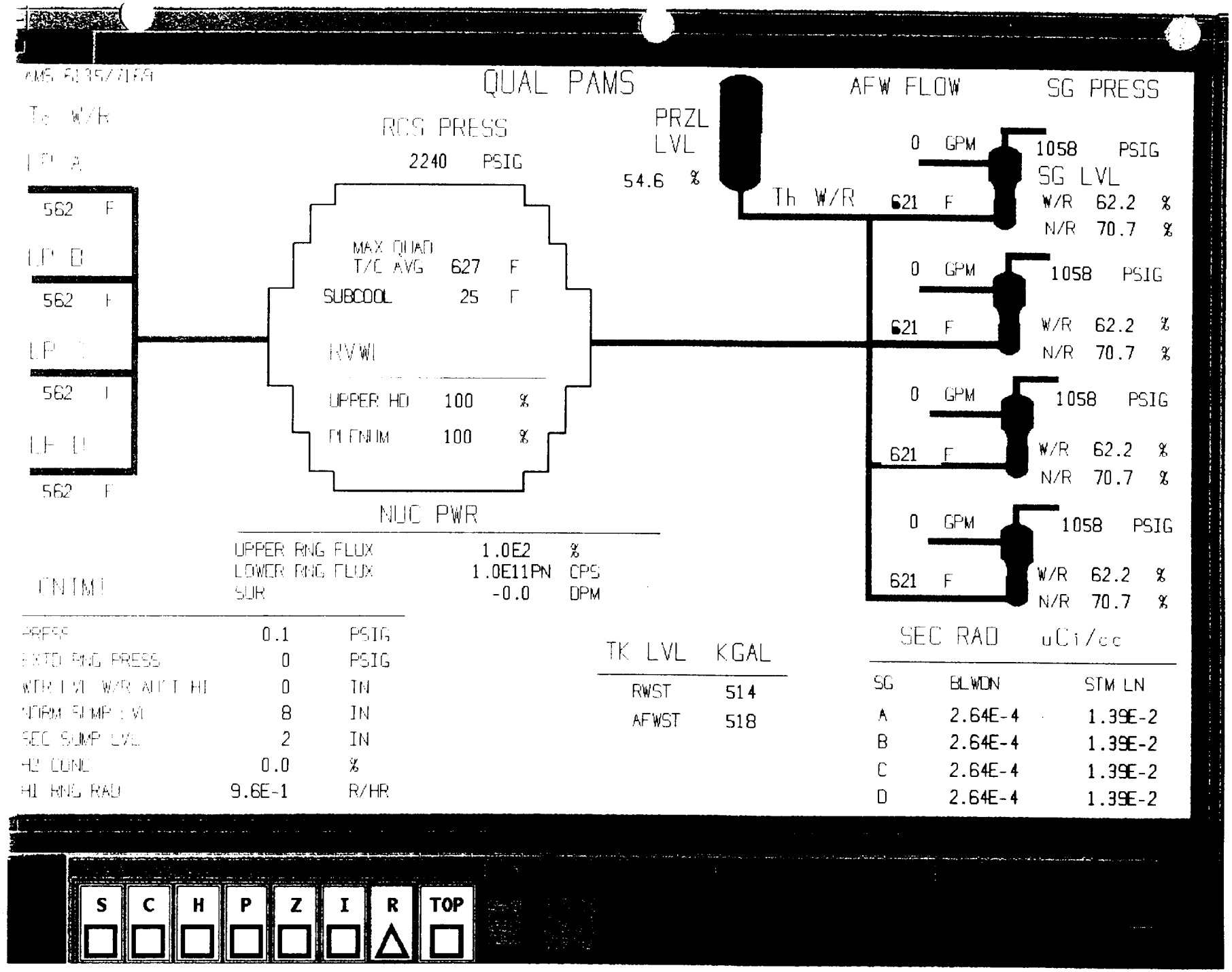
QUAL PAMS
AFW FLOW
SG PRESS
RCS PRESS
2240 PSIG
PRZL LVL
54.6 %
Th W/R
562 F
562 F
562 F
562 F
MAX QUAD T/C AVG 627 F
SUBCOOL 25 F
RVWI
UPPER HD 100 %
PLENUM 100 %
0 GPM
1058 PSIG
621 F
SG LVL
W/R 62.2 %
N/R 70.7 %
NUC PWR
UPPER RNG FLUX 1.0E2 %
LOWER RNG FLUX 1.0E11PN CPS
SUR -0.0 DPM
PRESS 0.1 PSIG
EXTD RNG PRESS 0 PSIG
WTR LVL W/R ABOVE HI 0 IN
NORM SUMP LVL 8 IN
SEC SUMP LVL 2 IN
H2 CONC 0.0 %
HI RNG RAD 9.6E-1 R/HR
TK LVL KGAL
RWST 514
AFWST 518
SEC RAD uCi/cc
SG BLWDN STM LN
A 2.64E-4 1.39E-2
B 2.64E-4 1.39E-2
C 2.64E-4 1.39E-2
D 2.64E-4 1.39E-2
S C H P Z I R TOP

C15

NRAD (R015)

RADIOACTIVITY STATUS [R]

UNIT 1

R/B PURGE

	uCi/cc
RT-8012	1.6E-6
RT-8013	1.2E-6

CR/EAB VENT

	uCi/cc
RT-8033	1.7E-6
RT-8034	1.4E-6

SFP EXHAUST

	uCi/cc
RT-8035	1.2E-6
RT-8036	1.0E-6

PLANT VENT (RT-8010)

	uCi/cc
PARTICULATE	4.0E-11
IODINE	2.1E-11
NOBLE GAS	0.0E0PN
	uCi/sec
RELEASE RATE	2.7E1

RCB ATMOSPHERE (RT-8011)

	uCi/cc
PARTICULATE	1.3E-9
IODINE	3.1E-12
NOBLE GAS	7.8E-6

CNTMT HI RANGE

	R/HR
RT-8050	1.1E0
RT-8051	7.6E-1PN

PLANT VENT (RT-8027)

	uCi/cc
NOBLE GAS	0.0E0PN
	uCi/sec
RELEASE RATE	3.7E-3

STM LINE (RT-8046 thru 8049)

	uCi/cc
SG A	1.3E-2
SG B	1.3E-2
SG C	1.3E-2
SG D	1.3E-2

SG BLOWDOWN (RT-8022 thru 8025)

	uCi/cc
SG A	2.6E-4
SG B	2.6E-4
SG C	2.6E-4
SG D	2.6E-4

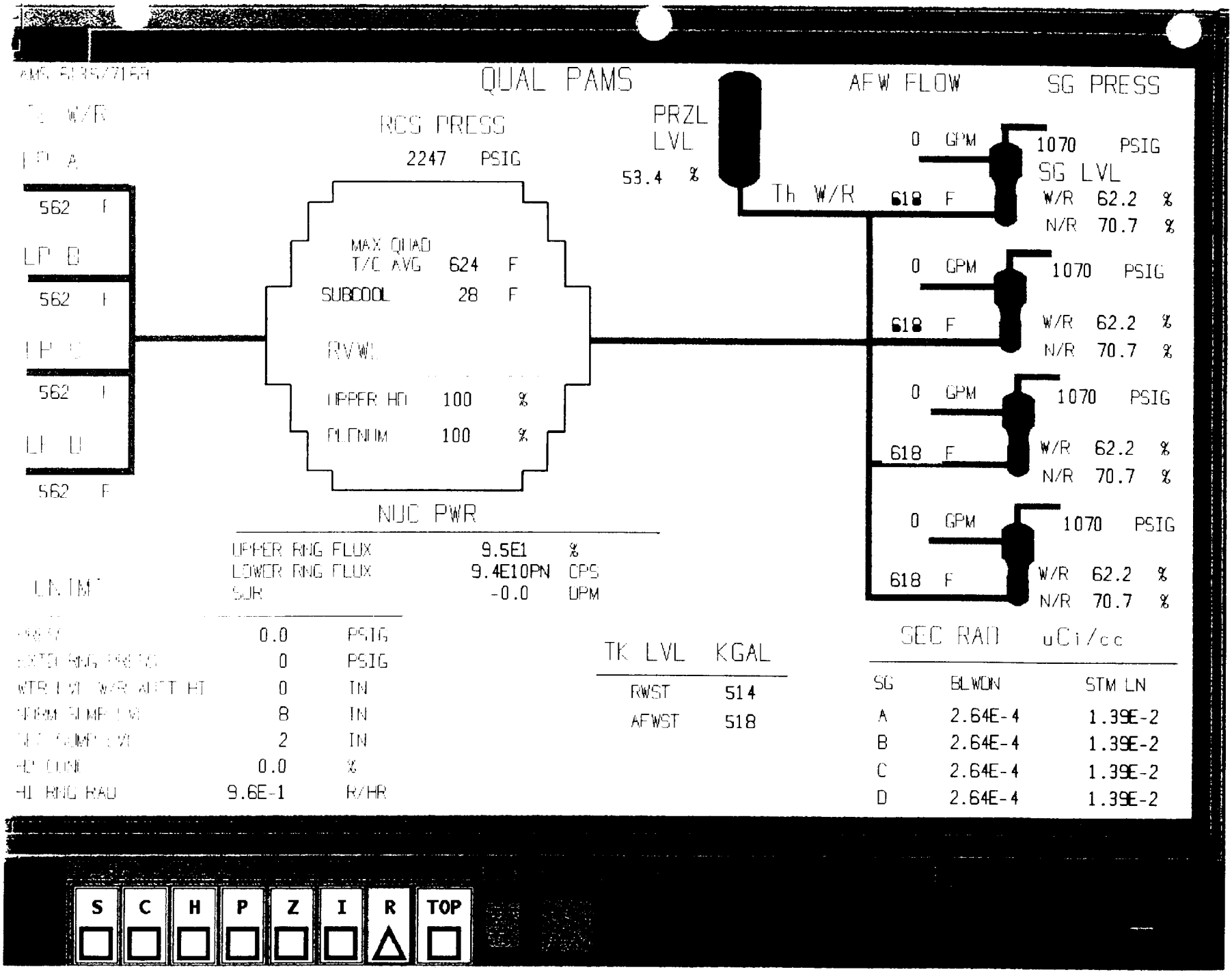
QUAL PAMS
RCS PRESS
2247 PSIG
PRZL LVL
53.4 %
AFW FLOW
SG PRESS
Th W/R
562 F
562 F
562 F
562 F
MAX QUAD T/C AVG 624 F
SUBCOOL 28 F
UPPER HD 100 %
PLENUM 100 %
0 GPM
618 F
1070 PSIG
SG LVL
W/R 62.2 %
N/R 70.7 %
NUC PWR
UPPER RNG FLUX 9.5E1 %
LOWER RNG FLUX 9.4E10PN CPS
SUR -0.0 DPM
0.0 PSIG
0 PSIG
0 IN
8 IN
2 IN
0.0 %
HI RNG RAD 9.6E-1 R/HR
TK LVL KGAL
RWST 514
AFWST 518
SEC RAD uCi/cc
SG BLWDN STM LN
A 2.64E-4 1.39E-2
B 2.64E-4 1.39E-2
C 2.64E-4 1.39E-2
D 2.64E-4 1.39E-2
S C H P Z I R TOP

C17

NRAD
(8015)

RADIOACTIVITY STATUS [R]

UNIT 1

R/B PURGE

	uCi/cc
RT-8012	1.6E-6
RT-8013	1.2E-6

CR/EAB VENT

	uCi/cc
RT-8033	1.7E-6
RT-8034	1.4E-6

SFP EXHAUST

	uCi/cc
RT-8035	1.2E-6
RT-8036	1.0E-6

[illegible] VENT
(RT-8010)

	uCi/cc
PARTICULATE	4.0E-11
IODINE	2.1E-11
NOBLE GAS	0.0E0PN
	uCi/sec
RELEASE RATE	2.7E1

RCB ATMOSPHERE
(RT-8011)

	uCi/cc
PARTICULATE	1.3E-9
IODINE	3.0E-12
NOBLE GAS	7.8E-6

CNTMT HI RANGE

	R/HR
RT-8050	1.1E0
RT-8051	7.6E-1PN

[illegible] VENT [illegible]
(RT-8027)

	uCi/cc
NOBLE GAS	0.0E0PN
	uCi/sec
RELEASE RATE	3.7E-3

STM LINE
(RT-8045 thru 8049)

	uCi/cc
SG A	1.3E-2
SG B	1.3E-2
SG C	1.3E-2
SG D	1.3E-2

SG BLOWDOWN
(RT-8022 thru 8025)

	uCi/cc
SG A	2.6E-4
SG B	2.6E-4
SG C	2.6E-4
SG D	2.6E-4

C18

QUAL PAMS

RCS PRESS
2236 PSIG

PRZL LVL
48.2 %

Th W/R 612 F

562 F
562 F
562 F
562 F

MAX QUAD T/C AVG 618 F
SUBCOOL 34 F

RVWI

UPPER HD 100 %
PLENUM 100 %

AFW FLOW

0 GPM
0 GPM
0 GPM
0 GPM

SG PRESS

1068 PSIG
1068 PSIG
1068 PSIG
1068 PSIG

SG LVL

W/R	62.2	%
N/R	70.6	%
W/R	62.2	%
N/R	70.6	%
W/R	62.2	%
N/R	70.6	%
W/R	62.2	%
N/R	70.6	%

612 F
612 F
612 F
612 F

NUC PWR

UPPER RNG FLUX	8.4E1	%
LOWER RNG FLUX	8.4E10PN	CPS
SUR	-0.0	DPM

	0.0	PSIG
	0	PSIG
	0	IN
	8	IN
	2	IN
	0.0	%
HI RNG RAD	9.6E-1	R/HR

TK LVL KGAL

RWST	514
AFWST	518

SEC RAD uCi/cc

SG	BLWDN	STM LN
A	2.64E-4	1.39E-2
B	2.64E-4	1.39E-2
C	2.64E-4	1.39E-2
D	2.64E-4	1.39E-2

S C H P Z I R TOP

C19

NRAD (8015)	RADIOACTIVITY STATUS [R]	UNIT 1

RCB PURGE

	uCi/cc
RT-8012	1.6E-6
RT-8013	1.2E-6

CR/EAB VENT

	uCi/cc
RT-8033	1.7E-6
RT-8034	1.4E-6

SFP EXHAUST

	uCi/cc
RT-8035	1.2E-6
RT-8036	1.0E-6

CNTMT VENT
(RT-8010)

	uCi/cc
PARTICULATE	4.0E-11
IODINE	2.1E-11
NOBLE GAS	0.0E0PN
	uCi/sec
RELEASE RATE	2.6E1

RCB ATMOSPHERE
(RT-8011)

	uCi/cc
PARTICULATE	1.3E-9
IODINE	3.0E-12
NOBLE GAS	7.8E-6

CNTMT HI RANGE

	R/HR
RT-8050	1.1E0
RT-8051	7.6E-1PN

CONDENSATE PUMP
(RT-8024)

	uCi/cc
NOBLE GAS	0.0E0PN
	uCi/sec
RELEASE RATE	3.6E-3

STM LINE
(RT-8046 thru 8049)

	uCi/cc
SG A	1.3E-2
SG B	1.3E-2
SG C	1.3E-2
SG D	1.3E-2

SG BLOWDOWN
(RT-8022 thru 8025)

	uCi/cc
SG A	2.6E-4
SG B	2.6E-4
SG C	2.6E-4
SG D	2.6E-4

AMS 8135/7189

QUAL PAMS

Tc W/R

LP A 563 F

LP B 563 F

LP C 563 F

LP D 563 F

RCS PRESS 2247 PSIG

MAX QUAD T/C AVG 614 F

SUBCOOL 38 F

RVWI

UPPER HD 100 %

PLENUM 100 %

PRZL LVL 47.1 %

Th W/R 608 F

AFW FLOW

0 GPM

0 GPM

0 GPM

0 GPM

SG PRESS

1082 PSIG

1082 PSIG

1082 PSIG

1082 PSIG

SG LVL

W/R 62.2 %

N/R 70.6 %

W/R 62.2 %

N/R 70.6 %

W/R 62.2 %

N/R 70.6 %

W/R 62.2 %

N/R 70.6 %

608 F

608 F

608 F

608 F

NUC PWR

UPPER RNG FLUX	7.6E1	%
LOWER RNG FLUX	7.5E10PN	CPS
SUR	-0.0	DPM

CNTMT

[illegible]	0.0	PSIG
[illegible] RNG PRESS	0	PSIG
WTR LVL W/R AUXT HI	0	IN
NORM SUMP LVL	8	IN
SEC SUMP LVL	2	IN
H2 CONC	0.0	%
HI RNG RAD	9.6E-1	R/HR

TK LVL	KGAL
RWST	514
AFWST	518

SEC RAD uCi/cc

SG	BLWDN	STM LN
A	2.64E-4	1.39E-2
B	2.64E-4	1.39E-2
C	2.64E-4	1.39E-2
D	2.64E-4	1.39E-2

S C H P Z I R TOP

C21

NRAD (8015)	RADIOACTIVITY STATUS [R]	UNIT 1

RCB PURGE

	uCi/cc
RT-8012	1.6E-6
RT-8013	1.2E-6

CR/EAB VENT

	uCi/cc
RT-8033	1.7E-6
RT-8034	1.4E-6

SFP EXHAUST

	uCi/cc
RT-8035	1.2E-6
RT-8036	1.0E-6

PNEU VENT
(RT-8010)

	uCi/cc
PARTICULATE	4.0E-11
IODINE	2.1E-11
NOBLE GAS	0.0E0PN
	uCi/sec
RELEASE RATE	2.6E1

RCB ATMOSPHERE
(RT-8011)

	uCi/cc
PARTICULATE	1.3E-9
IODINE	3.0E-12
NOBLE GAS	7.8E-6

CNTMT HI RANGE

	R/HR
RT-8050	1.1E0
RT-8051	7.6E-1PN

CONDENSER VAC PUMP
(RT-8027)

	uCi/cc
NOBLE GAS	0.0E0PN
	uCi/sec
RELEASE RATE	3.5E-3

STM LINE
(RT-8046 thru 8049)

	uCi/cc
SG A	1.3E-2
SG B	1.3E-2
SG C	1.3E-2
SG D	1.3E-2

SG BLOWDOWN
(RT-8022 thru 8025)

	uCi/cc
SG A	2.6E-4
SG B	2.6E-4
SG C	2.6E-4
SG D	2.6E-4

C22

TOP-N
(5016)

NORMAL SAFETY PARAMETERS

UNIT 1

ALARM

WARNING

NORMAL

S	C	H	P	Z	I	R
NSF-S	NSF-C	NSF-H	NSF-P	NSF-Z	NSF-I	RAD

RX TRIP TRIP
R S
CLS CLS

S C H P Z I R TOP

C23

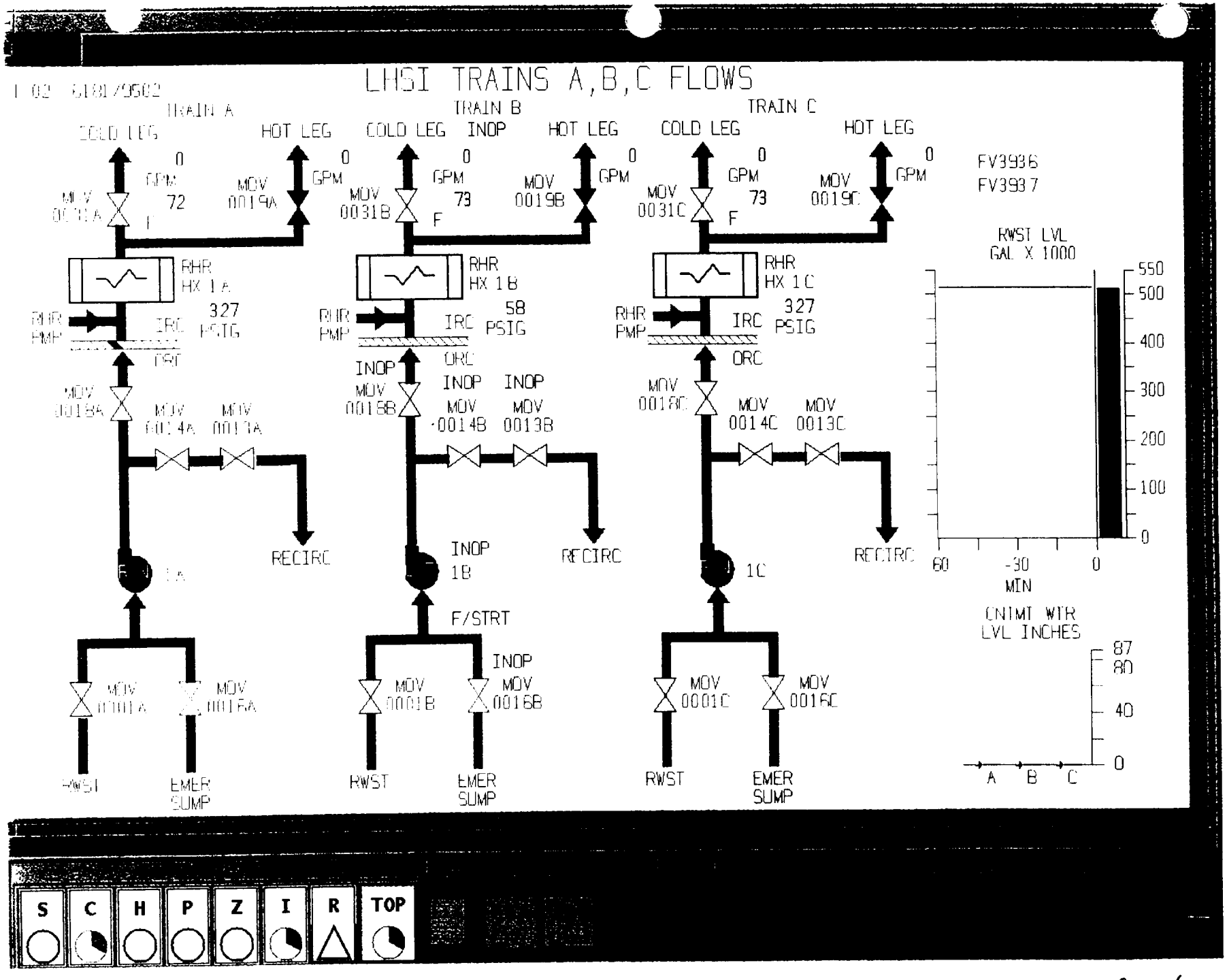

S C H P Z I R TOP

C24

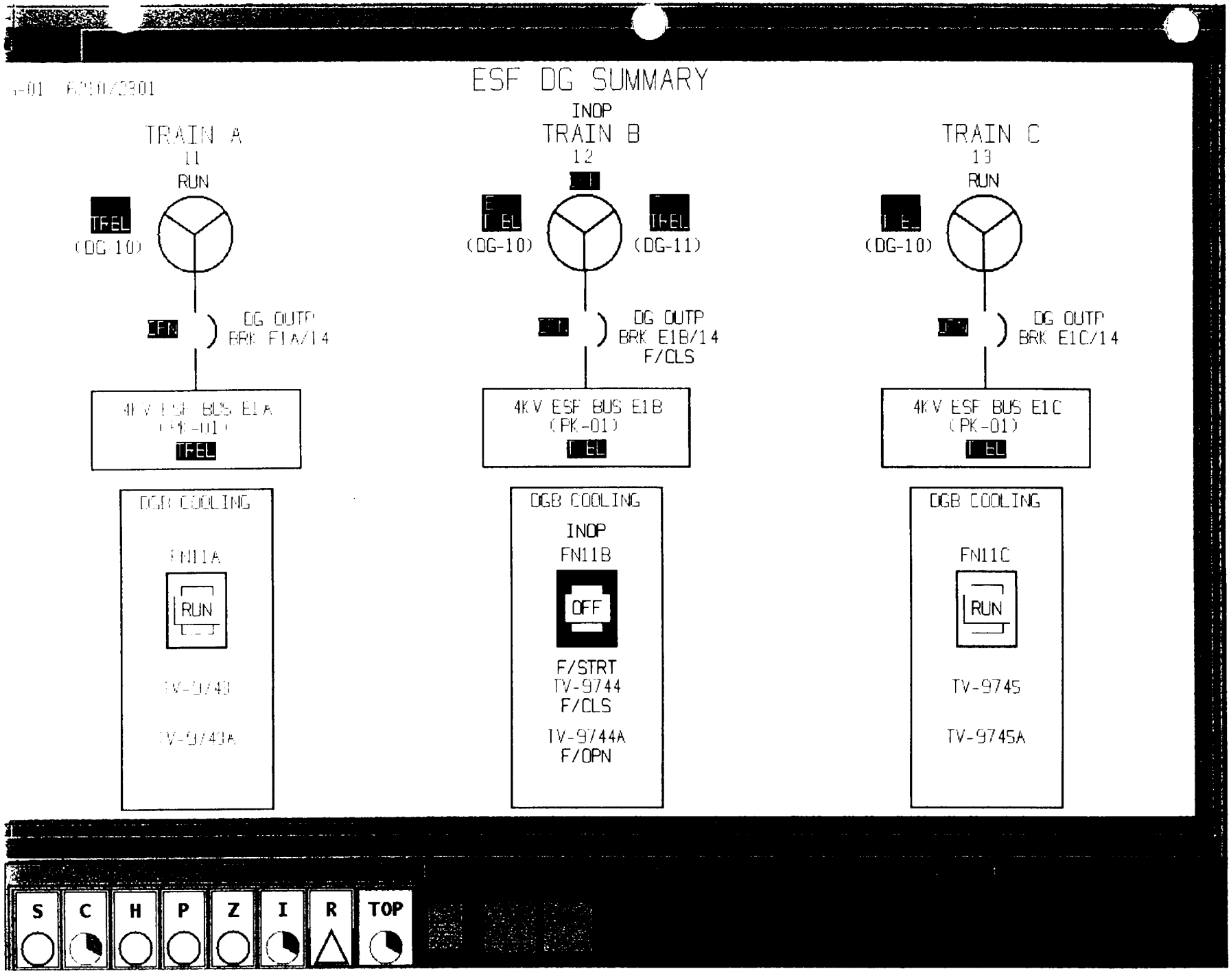
ESF DG SUMMARY
TRAIN A
11
RUN
TFEL
(DG 10)
DG OUTP
BRK F1A/14
4KV ESF BUS E1A
(PK-01)
TFEL
DGB COOLING
FN11A
RUN
TV-9743
TV-9743A
INOP
TRAIN B
12
(DG-10)
(DG-11)
DG OUTP
BRK E1B/14
F/CLS
4KV ESF BUS E1B
(PK-01)
DGB COOLING
INOP
FN11B
OFF
F/STRT
TV-9744
F/CLS
TV-9744A
F/OPN
TRAIN C
13
RUN
(DG-10)
DG OUTP
BRK E1C/14
4KV ESF BUS E1C
(PK-01)
DGB COOLING
FN11C
RUN
TV-9745
TV-9745A
S
C
H
P
Z
I
R
TOP

C25

AMS 6135/7189

QUAL PAMS

Tc W/R

LP A 537 F

LP B 537 F

LP C 537 F

LP D 537 F

RCS PRESS 943 PSIG

MAX QUAD T/C AVG 539 F

SUPERHEA 1 F

RVWI

UPPER HD %

PLENUM 100 %

PRZL LVL 1.0 %

Th W/R 538 F

AFW FLOW

SG PRESS

GPM	1120 PSIG	SG LVL	W/R	61.6 %
538 F			N/R	67.4 %
0 GPM	1112 PSIG		W/R	58.0 %
538 F			N/R	50.0 %
GPM	1126 PSIG		W/R	61.7 %
538 F			N/R	68.3 %
0 GPM	923 PSIG		W/R	60.9 %
538 F			N/R	64.0 %

NUC PWR

UPPER RNG FLUX	2.7E-6	%
LOWER RNG FLUX	2.7E3	CPS
SUR		DPM

CNTMT

PRESS	8.2	PSIG
AUTO RNG PRESS	8	PSIG
WTR LVL W/R AUXT HI	0	IN
NORM SUMP LVL	72PN	IN
SEC SUMP LVL	12	IN
H2 CONC	0.0	%
HI RNG RAD	2.4E0	R/HR

TK LVL	KGAL
RWST	495
AFWST	509

SEC RAD uCi/cc

SG	BLWDN	STM LN
A	2.64E-4	1.39E-2
B	2.64E-4	1.39E-2
C	2.64E-4	1.39E-2
D	2.64E-4	1.39E-2

S C H P Z I R TOP

C 26

NRAD (R015)

RADIOACTIVITY STATUS [R]

UNIT 1

R/B PURGE

	uCi/cc
RT-8012	1.6E-6
RT-8013	1.2E-6

CR/EAB VENT

	uCi/cc
RT-8033	1.7E-6
RT-8034	1.4E-6

SFP EXHAUST

	uCi/cc
RT-8035	1.2E-6
RT-8036	1.0E-6

UNIT VENT
(RT-8010)

	uCi/cc
PARTICULATE	4.0E-11
IODINE	2.1E-11
NOBLE GAS	0.0E0PN
	uCi/sec
RELEASE RATE	2.6E1

RCB ATMOSPHERE
(RT-8011)

	uCi/cc
PARTICULATE	4.1E-5
IODINE	1.1E-6
NOBLE GAS	1.9E-2

CNTMT HI RANGE

	R/HR
RT-8050	2.6E0
RT-8051	2.2E0

UNIT VA PUMP
(RT-8027)

	uCi/cc
NOBLE GAS	0.0E0PN
	uCi/sec
RELEASE RATE	2.8E-3

STM LINE
(RT-8046 thru 8049)

	uCi/cc
SG A	1.3E-2
SG B	1.3E-2
SG C	1.3E-2
SG D	1.3E-2

SG BLOWDOWN
(RT-8022 thru 8025)

	uCi/cc
SG A	2.6E-4
SG B	2.6E-4
SG C	2.6E-4
SG D	2.6E-4

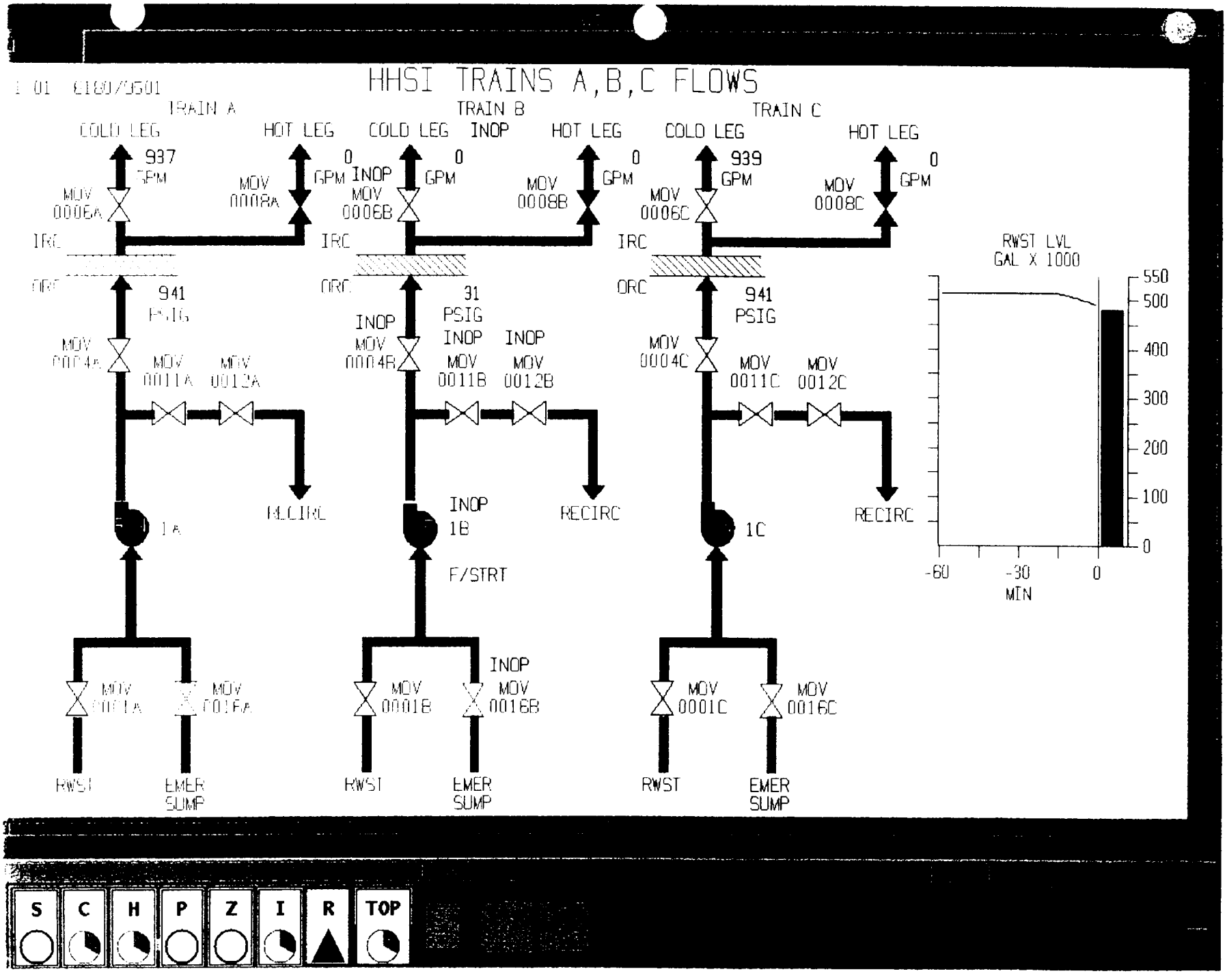
HHSI TRAINS A,B,C FLOWS
TRAIN A
TRAIN B
TRAIN C
COLD LEG
HOT LEG
COLD LEG
INOP
HOT LEG
COLD LEG
HOT LEG
937 GPM
0 GPM
INOP
0 GPM
0 GPM
939 GPM
0 GPM
MOV 0006A
MOV 0008A
MOV 0006B
MOV 0008B
MOV 0006C
MOV 0008C
IRC
ORC
941 PSIG
31 PSIG
INOP
941 PSIG
MOV 0004A
MOV 0011A
MOV 0012A
INOP MOV 0004B
INOP MOV 0011B
INOP MOV 0012B
MOV 0004C
MOV 0011C
MOV 0012C
RECIRC
1A
INOP 1B
F/STRT
1C
MOV 0001A
MOV 0016A
MOV 0001B
INOP MOV 0016B
MOV 0001C
MOV 0016C
RWST
EMER SUMP
RWST LVL GAL X 1000
550
500
400
300
200
100
0
-60
-30
0
MIN
S
C
H
P
Z
I
R
TOP

C 28

QUAL PAMS

PAMS 6/25/1989

T. W/R		
LP A	161	F
LP B	502	F
LP C	151	F
LP D	520	F

RCS PRESS 917 PSIG

MAX QUAD T/C AVG	429	F
SUBCOOL	105	F
RVWI		
UPPER HD	100	%
PLENUM	100	%

PRZL LVL % 100

Th W/R 531 F

AFW FLOW

0	GPM	

SG PRESS

1032	PSIG	
SG LVL		
W/R	61.4	%
N/R	66.6	%
0	GPM	
1065	PSIG	
534	F	
W/R	57.6	%
N/R	48.0	%
0	GPM	
1029	PSIG	
529	F	
W/R	61.6	%
N/R	67.6	%
0	GPM	
801	PSIG	
466	F	
W/R	59.3	%
N/R	56.0	%

NUC PWR

UPPER RNG FLUX	2.1E-9PN	%
LOWER RNG FLUX	2.1E0	CPS
SUR	-0.0	DPM

CNTMT

PRESS	11.8	PSIG
CNTMT RNG PRESS	12	PSIG
WTR LVL W/R AUXT HT	0	IN
NORM SUMP LVL	72PN	IN
SEC SUMP LVL	12	IN
H2 CONC	0.0	%
HI RNG RAD	1.0E2	R/HR

TK LVL	KGAL
RWST	427
AFWST	509

SEC RAD uCi/cc

SG	BLWDN	STM LN
A	2.64E-4	1.39E-2
B	2.64E-4	1.39E-2
C	2.64E-4	1.39E-2
D	2.64E-4	1.39E-2

S C H P Z I R TOP

C 29

NRAD (8015)

RADIOACTIVITY STATUS [R]

UNIT 1

RCE PURGE

	uCi/cc
RT-8012	1.6E-6
RT-8013	1.2E-6

CR/EAB VENT

	uCi/cc
RT-8033	1.7E-6
RT-8034	1.4E-6

SFP EXHAUST

	uCi/cc
RT-8035	1.2E-6
RT-8036	1.0E-6

[illegible] VENT (RT-8010)

	uCi/cc
PARTICULATE	4.0E-11
IODINE	2.1E-11
NOBLE GAS	0.0E0PN
	uCi/sec
RE EASE RATE	2.6E1

RCB ATMOSPHERE (RT-8011)

	uCi/cc
PARTICULATE	1.7E-5
IODINE	1.1E-6
NOBLE GAS	1.9E-2

CNTMT HI RANGE

	R/HR
RT-8050	1.1E2
RT-8051	1.0E2

[illegible] VAC PUMP (RT-8027)

	uCi/cc
NOBLE GAS	0.0E0PN
	uCi/sec
RELEASE RATE	2.8E-3

STM LINE (RT-8046 thru 8049)

	uCi/cc
SG A	1.3E-2
SG B	1.3E-2
SG C	1.3E-2
SG D	1.3E-2

SG BLOWDOWN (RT-8022 thru 8025)

	uCi/cc
SG A	2.6E-4
SG B	2.6E-4
SG C	2.6E-4
SG D	2.6E-4

C30

AMS 8135/7184

QUAL PAMS

L W/R

LP A

469 F

LP B

478 F

LP C

461 F

LP D

340 F

RCS PRESS

875 PSIG

MAX QUAD T/C AVG 404 F

SUBCOOL 125 F

RVWI

UPPER HD %

PLENUM 100 %

PRZL LVL

0.0 %

Th W/R 532 F

AFW FLOW

SG PRESS

0 GPM 959 PSIG

SG LVL

W/R 61.4 %

N/R 66.4 %

0 GPM 1028 PSIG

531 F

W/R 57.5 %

N/R 47.5 %

0 GPM 951 PSIG

531 F

W/R 61.6 %

N/R 67.4 %

74 GPM 689 PSIG

496 F

W/R 57.9 %

N/R 49.4 %

NUC PWR

UPPER RNG FLUX	1.9E-9PN	%
LOWER RNG FLUX	1.9E0	CPS
SUR		DPM

CNTMT

PRESS	11.9	PSIG
EXTD RNG PRESS	12	PSIG
WTR LVL W/R ANCT HI	16	IN
NORM SUMP LVL	72PN	IN
SEC SUMP LVL	12	IN
H2 CONC	0.0	%
HI RNG RAD	2.8E2	R/HR

TK LVL	KGAL
RWST	367
AFWST	509

SEC RAD uCi/cc

SG	BLWDN	STM LN
A	2.64E-4	1.39E-2
B	2.64E-4	1.39E-2
C	2.64E-4	1.39E-2
D	2.64E-4	1.39E-2

S C H P Z I R TOP

C 31

NRAD (8015)

RADIOACTIVITY STATUS [R]

UNIT 1

RCB PURGE

	uCi/cc
RT-8012	1.6E-6
RT-8013	1.2E-6

CR/EAB VENT

	uCi/cc
RT-8033	1.7E-6
RT-8034	1.4E-6

SFP EXHAUST

	uCi/cc
RT-8035	1.2E-6
RT-8036	1.0E-6

[illegible] VENT
(RT-8010)

	uCi/cc
PARTICULATE	4.0E-11
IODINE	2.1E-11
NOBLE GAS	0.0E0PN
	uCi/sec
RELEASE RATE	2.6E1

RCB ATMOSPHERE
(RT-8011)

	uCi/cc
PARTICULATE	1.9E-6
IODINE	1.1E-6
NOBLE GAS	1.9E-2

CNTMT HI RANGE

	R/HR
RT-8050	
RT-8051	

[illegible] VAC PUMP
(RT-8023)

	uCi/cc
NOBLE GAS	0.0E0PN
	uCi/sec
RELEASE RATE	2.8E-3

STM LINE
(RT-8046 thru 8049)

	uCi/cc
SG A	1.3E-2
SG B	1.3E-2
SG C	1.3E-2
SG D	1.3E-2

SG BLOWDOWN
(RT-8022 thru 8025)

	uCi/cc
SG A	2.6E-4
SG B	2.6E-4
SG C	2.6E-4
SG D	2.6E-4

S C H P Z I R TOP

C 32

AMS 6135/7169

QUAL PAMS

TC W/R		
LP A	372	F
LP B	442	F
LP C	272	F
LP D	375	F

RCS PRESS 551 PSIG

MAX QUAD T/C AVG	403	F
SUBCOOL	73	F
RVWI		
UPPER HD	100	%
PLENUM	100	%

PRZL LVL 100 %

Th W/R 481 F

AFW FLOW

SG PRESS

0	GPM	900	PSIG	SG LVL	
481	F			W/R	61.1 %
				N/R	65.1 %
0	GPM	989	PSIG		
481	F			W/R	57.3 %
				N/R	46.5 %
0	GPM	888	PSIG		
481	F			W/R	61.3 %
				N/R	66.1 %
100	GPM	530	PSIG		
465	F			W/R	59.0 %
				N/R	49.4 %

NUC PWR

UPPER RNG FLUX	2.0E-9PN	%
LOWER RNG FLUX	1.9E0	CPS
SUR	-0.0	DPM

CNTMT

PRESS	11.6	PSIG
SUMP RNG PRESS	12	PSIG
WTR LVL W/R ANCT HI	18	IN
NORM SUMP LVL	72PN	IN
SEC SUMP LVL	12	IN
HD CONC	0.0	%
HI RNG RAD	4.3E2	R/HR

TK LVL	KGAL
RWST	352
AFWST	507

SEC RAD uCi/cc

SG	BLWDN	STM LN
A	2.64E-4	1.39E-2
B	2.64E-4	1.39E-2
C	2.64E-4	1.39E-2
D	2.64E-4	1.39E-2

S C H P Z I R TOP

C33

NRAD (R005)

RADIOACTIVITY STATUS [R]

UNIT 1

RCB PURGE

	uCi/cc
RT-8012	1.6E-6
RT-8013	1.2E-6

CR/EAB VENT

	uCi/cc
RT-8033	1.7E-6
RT-8034	1.4E-6

SFP EXHAUST

	uCi/cc
RT-8035	1.2E-6
RT-8036	1.0E-6

RCB VENT
(RT-8010)

	uCi/cc
PARTICULATE	4.0E-11
IODINE	2.1E-11
NOBLE GAS	0.0E0PN
	uCi/sec
RELEASE RATE	2.6E1

RCB ATMOSPHERE
(RT-8011)

	uCi/cc
PARTICULATE	2.3E-7
IODINE	1.1E-6
NOBLE GAS	1.9E-2

CNTMT HI RANGE

	R/HR
RT-8050	4.3E2
RT-8051	4.3E2

CONDENSATE VAC PUMP
(RT-8027)

	uCi/cc
NOBLE GAS	0.0E0PN
	uCi/sec
RELEASE RATE	3.6E-3

STM LINE
(RT-8046 thru 8049)

	uCi/cc
SG A	1.3E-2
SG B	1.3E-2
SG C	1.3E-2
SG D	1.3E-2

SG BLOWDOWN
(RT-8022 thru 8025)

	uCi/cc
SG A	2.6E-4
SG B	2.6E-4
SG C	2.6E-4
SG D	2.6E-4

C 34

AMS 6135/7169

QUAL PAMS

W/R	
IP A	
267	F
IP B	
322	F
IP C	
439	F
IP D	
377	F

RCS PRESS 418 PSIG

MAX QUAD T/C AVG	385	F
SUBCOOL	63	F
RVWI		
UPPER HD	100	%
PLENUM	100	%

PRZL LVL % Th W/R

AFW FLOW SG PRESS

0	GPM	833	PSIG		
444	F	SG LVL			
		W/R	60.1	%	
		N/R	60.1	%	
0	GPM	936	PSIG		
449	F	W/R	56.4	%	
		N/R	[illegible]	%	
0	GPM	812	PSIG		
448	F	W/R	60.0	%	
		N/R	59.5	%	
107	GPM	348	PSIG		
419	F	W/R	60.9	%	
		N/R	48.6	%	

NUC PWR

UPPER RNG FLUX	1.9E-9PN	%
LOWER RNG FLUX	1.9E0	CPS
SUR	-0.0	DPM

CNTMT

[illegible]	10.1	PSIG
STD RNG PRESS	10	PSIG
WTR LVL W/R AUXT HT	21	IN
NORM SUMP LVL	72PN	IN
SEC SUMP LVL	12	IN
H2 CONC	0.0	%
HI RNG RAD	6.0E2	R/HR

TK LVL	KGAL
RWST	334
AFWST	506

SEC RAD uCi/cc

SG	BLWDN	STM LN
A	2.64E-4	1.39E-2
B	2.64E-4	1.39E-2
C	2.64E-4	1.39E-2
D	2.64E-4	1.39E-2

S C H P Z I R TOP

C 35

NRAD (8015)

RADIOACTIVITY STATUS [R]

UNIT 1

RCP PURGE

	uCi/cc
RT-8012	1.6E-6
RT-8013	1.3E-6

CR/EAB VENT

	uCi/cc
RT-8033	1.7E-6
RT-8034	1.4E-6

SFP EXHAUST

	uCi/cc
RT-8035	1.2E-6
RT-8036	1.0E-6

UNIT VENT (RT-8010)

	uCi/cc
PARTICULATE	4.0E-11
IODINE	2.1E-11
NOBLE GAS	0.0E0PN
	uCi/sec
RELEASE RATE	2.7E1

RCB ATMOSPHERE (RT-8011)

	uCi/cc
PARTICULATE	2.6E-8
IODINE	1.1E-6
NOBLE GAS	1.9E-2

CNTMT HI RANGE

	R/HR
RT-8050	
RT-8051	

PRIMARY VALVE VENT (RT-8027)

	uCi/cc
NOBLE GAS	0.0E0PN
	uCi/sec
RELEASE RATE	1.0E-2

STM LINE (RT-8046 thru 8049)

	uCi/cc
SG A	1.3E-2
SG B	1.3E-2
SG C	1.3E-2
SG D	1.3E-2

SG BLOWDOWN (RT-8022 thru 8025)

	uCi/cc
SG A	2.6E-4
SG B	2.6E-4
SG C	2.6E-4
SG D	2.6E-4

AMS 8135/7169

QUAL PAMS

T W/R

LP A

228 F

LP B

294 F

LP C

173 F

LP D

405 F

RCS PRESS

416 PSIG

MAX QUAD T/C AVG 334 F

SUBCOOL 114 F

RVWL

UPPER HD %

PLENUM 100 %

PRZL LVL

LOW %

Th W/R

AFW FLOW

SG PRESS

0 GPM 783 PSIG

409 F

SG LVL

W/R 60.2 %

N/R 56.3 %

0 GPM 899 PSIG

446 F

W/R 55.9 %

N/R [illegible] %

0 GPM 763 PSIG

437 F

W/R 60.6 %

N/R 56.5 %

0 GPM 255 PSIG

366 F

W/R 62.5 %

N/R 49.6 %

NUC PWR

UPPER RNG FLUX	1.8E-9PN	%
LOWER RNG FLUX	1.8E0	CPS
SUR		DPM

CNTMT

PRESS	8.8	PSIG
EXTD RNG PRESS	9	PSIG
WTR LVL W/R ALST HI	21	IN
STRM SUMP LVL	72PN	IN
RCC SUMP LVL	12	IN
H2 CONC	0.0	%
HI RNG RAD	1.0E3	R/HR

TK LVL	KGAL
RWST	312
AFWST	504

SEC RAD uCi/cc

SG	BLWDN	STM LN
A	2.64E-4	1.39E-2
B	2.64E-4	1.39E-2
C	2.64E-4	1.39E-2
D	2.64E-4	1.39E-2

S C H P Z I R TOP

C 37

NRAD (8015)

RADIOACTIVITY STATUS [R]

UNIT 1

R/B PURGE

	uCi/cc
RT-8012	1.6E-6
RT-8013	1.3E-6

CR/EAB VENT

	uCi/cc
RT-8033	1.7E-6
RT-8034	1.4E-6

SFP EXHAUST

	uCi/cc
RT-8035	1.2E-6
RT-8036	1.0E-6

PRI. VENT
(RT-8010)

	uCi/cc
PARTICULATE	4.0E-11
IODINE	2.1E-11
NOBLE GAS	0.0E0PN
	uCi/sec
RELEASE RATE	2.6E1

RCB ATMOSPHERE
(RT-8011)

	uCi/cc
PARTICULATE	2.7E-9
IODINE	1.1E-6
NOBLE GAS	1.9E-2

CNTMT HI RANGE

	R/HR
RT-8050	1.0E3
RT-8051	1.0E3

PRIMARY VAC PUMP
(RT-8017)

	uCi/cc
NOBLE GAS	0.0E0PN
	uCi/sec
RELEASE RATE	1.0E-3

STM LINE
(RT-8046 thru 8049)

	uCi/cc
SG A	1.3E-2
SG B	1.3E-2
SG C	1.3E-2
SG D	1.3E-2

SG BLOWDOWN
(RT-8022 thru 8025)

	uCi/cc
SG A	2.6E-4
SG B	2.6E-4
SG C	2.6E-4
SG D	2.6E-4

NRAD (8015)

RADIOACTIVITY STATUS [R]

UNIT 1

R/F PURGE

	uCi/cc
RT-8031	1.6E-6
RT-8032	1.3E-6

CR/EAB VENT

	uCi/cc
RT-8033	1.7E-6
RT-8034	1.4E-6

SFP EXHAUST

	uCi/cc
RT-8035	1.2E-6
RT-8036	1.0E-6

[illegible] VENT
(RT-8010)

	uCi/cc
PARTICULATE	4.0E-11
IODINE	2.1E-11
NOBLE GAS	0.0E0PN
	uCi/sec
RELEASE RATE	2.6E1

REB ATMOSPHERE
(RT-8011)

	uCi/cc
PARTICULATE	3.6E-10
IODINE	1.1E-6
NOBLE GAS	1.9E-2

CNTMT HI RANGE

	R/HR
RT-8050	
RT-8051	

[illegible] VAC PUMP
(RT-8012)

	uCi/cc
NOBLE GAS	0.0E0PN
	uCi/sec
RELEASE RATE	1.0E-3

STM LINE
(RT-8046 thru 8049)

	uCi/cc
SG A	1.3E-2
SG B	1.3E-2
SG C	1.3E-2
SG D	1.3E-2

SG BLOWDOWN
(RT-8022 thru 8025)

	uCi/cc
SG A	2.6E-4
SG B	2.6E-4
SG C	2.6E-4
SG D	2.6E-4

AMS 6135/7169

QUAL PAMS

LP A	302	F
LP B	310	F
LP C	208	F
LP D	315	F

RCS PRESS 317 PSIG

MAX QUAD T/C AVG	344	F
SUBCOOL	79	F
RVWL		
UPPER HD	100	%
PLENUM	100	%

PRZL LVL 100 %

Th W/R 426 F

AFW FLOW — SG PRESS

0 GPM	747 PSIG	SG LVL	W/R 60.6 %	N/R 55.9 %
0 GPM	872 PSIG	427 F	W/R 55.9 %	N/R [illegible] %
0 GPM	726 PSIG	428 F	W/R 60.9 %	N/R 56.1 %
0 GPM	250 PSIG	384 F	W/R 62.5 %	N/R 49.2 %

NUC PWR

UPPER RNG FLUX	1.7E-9PN	%
LOWER RNG FLUX	1.7E0	CPS
SUR	-0.0	DPM

LIMITS

[illegible]	7.5	PSIG
[illegible]	8	PSIG
[illegible]	24	IN
[illegible]	72PN	IN
[illegible]	12	IN
[illegible]	0.0	%
HI RNG RAD	1.6E3	R/HR

TK LVL KGAL

RWST	301
AFWST	504

SEC RAD uCi/cc

SG	BLWDN	STM LN
A	2.64E-4	1.39E-2
B	2.64E-4	1.39E-2
C	2.64E-4	1.39E-2
D	2.64E-4	1.39E-2

S C H P Z I R TOP

C 40

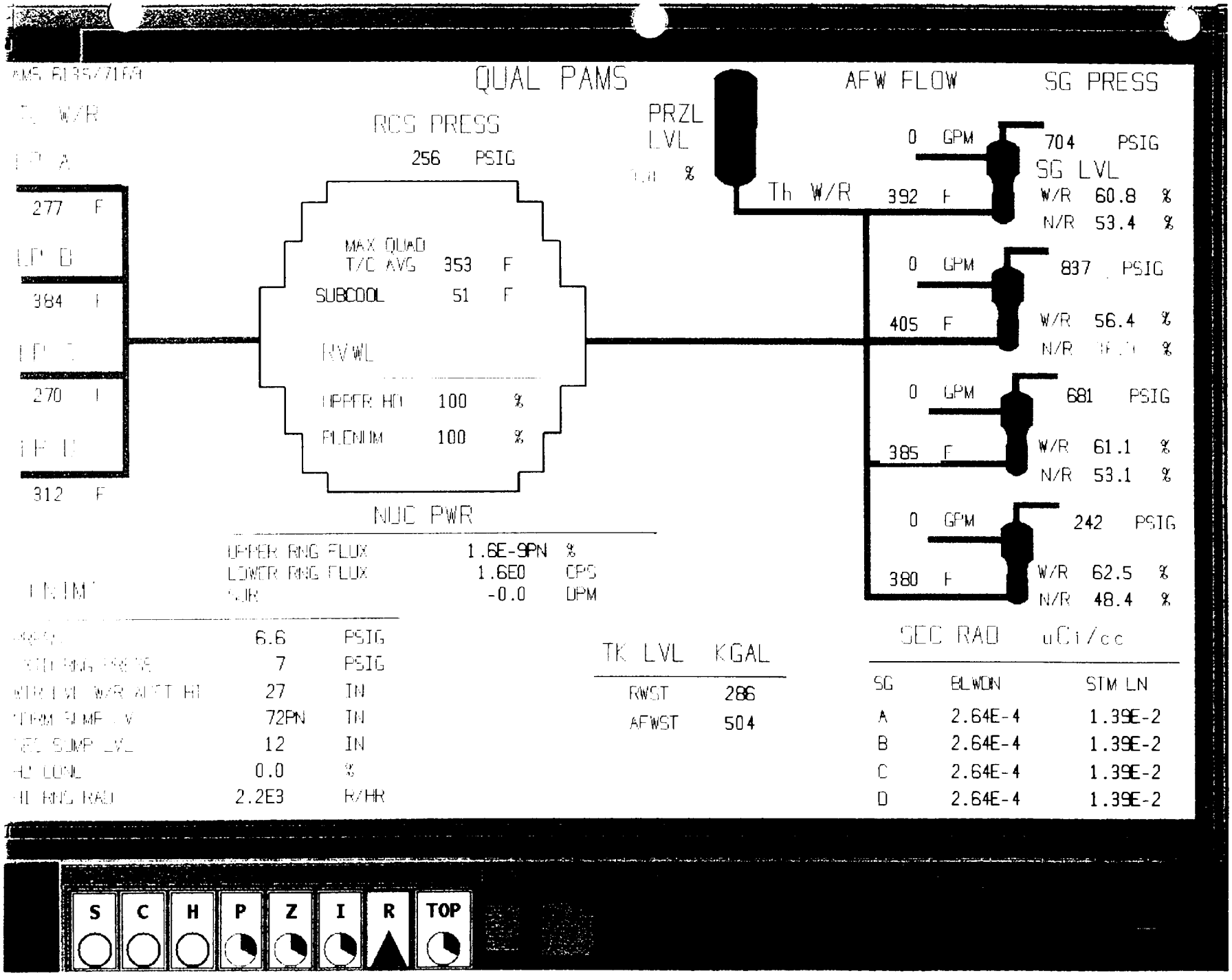
QUAL PAMS
RCS PRESS
256 PSIG
PRZL LVL
AFW FLOW
SG PRESS
0 GPM
704 PSIG
SG LVL
Th W/R
392 F
W/R 60.8 %
N/R 53.4 %
0 GPM
837 PSIG
405 F
W/R 56.4 %
0 GPM
681 PSIG
385 F
W/R 61.1 %
N/R 53.1 %
0 GPM
242 PSIG
380 F
W/R 62.5 %
N/R 48.4 %
277 F
384 F
270 F
312 F
MAX QUAD T/C AVG 353 F
SUBCOOL 51 F
RVWL
UPPER HD 100 %
PLENUM 100 %
NUC PWR
UPPER RNG FLUX 1.6E-9PN %
LOWER RNG FLUX 1.6E0 CPS
SUR -0.0 DPM
6.6 PSIG
7 PSIG
27 IN
72PN IN
12 IN
0.0 %
2.2E3 R/HR
TK LVL KGAL
RWST 286
AFWST 504
SEC RAD uCi/cc
SG BLWDN STM LN
A 2.64E-4 1.39E-2
B 2.64E-4 1.39E-2
C 2.64E-4 1.39E-2
D 2.64E-4 1.39E-2
S C H P Z I R TOP

C41

NRAD (8015)

RADIOACTIVITY STATUS [R]

UNIT 1

RCB PURGE

	uCi/cc
RT-8012	1.6E-6
RT-8013	1.3E-6

CR/EAB VENT

	uCi/cc
RT-8033	1.7E-6
RT-8034	1.4E-6

SFP EXHAUST

	uCi/cc
RT-8035	1.2E-6
RT-8036	1.0E-6

UNIT VENT
(RT-8010)

	uCi/cc
PARTICULATE	4.0E-11
IODINE	2.1E-11
NOBLE GAS	0.0E0PN
	uCi/sec
RELEASE RATE	2.6E1

RCB ATMOSPHERE
(RT-8011)

	uCi/cc
PARTICULATE	4.1E-11
IODINE	1.1E-6
NOBLE GAS	1.9E-2

CNTMT HI RANGE

	R/HR
RT-8050	2.2E3
RT-8051	2.2E3

EMPTY VAC TUMP
(RT-8024)

	uCi/cc
NOBLE GAS	0.0E0PN
	uCi/sec
RELEASE RATE	1.0E-3

STM LINE
(RT-8046 thru 8049)

	uCi/cc
SG A	1.3E-2
SG B	1.3E-2
SG C	1.3E-2
SG D	1.3E-2

SG BLOWDOWN
(RT-8022 thru 8025)

	uCi/cc
SG A	2.6E-4
SG B	2.6E-4
SG C	2.6E-4
SG D	2.6E-4

NRAD (8015)

RADIOACTIVITY STATUS [R]

UNIT 1

RCB PURGE

	uCi/cc
RT-8012	1.7E-6
RT-8013	1.3E-6

CR/EAB VENT

	uCi/cc
RT-8033	1.7E-6
RT-8034	1.4E-6

SFP EXHAUST

	uCi/cc
RT-8035	1.2E-6
RT-8036	1.0E-6

UNIT VENT
(RT-8010)

	uCi/cc
PARTICULATE	4.0E-11
IODINE	2.1E-11
NOBLE GAS	0.0E0PN
	uCi/sec
RELEASE RATE	2.6E1

RCB ATMOSPHERE
(RT-8011)

	uCi/cc
PARTICULATE	4.1E-11
IODINE	1.1E-6
NOBLE GAS	1.9E-2

CNTMT HI RANGE

	R/HR
RT-8050	2.7E3
RT-8051	2.7E3

TURBINE VALVE IMP
(RT-8027)

	uCi/cc
NOBLE GAS	0.0E0PN
	uCi/sec
RELEASE RATE	1.0E-3

STM LINE
(RT-8046 thru 8049)

	uCi/cc
SG A	1.3E-2
SG B	1.3E-2
SG C	1.3E-2
SG D	1.3E-2

SG BLOWDOWN
(RT-8022 thru 8025)

	uCi/cc
SG A	2.6E-4
SG B	2.6E-4
SG C	2.6E-4
SG D	2.6E-4

AMS 6135/7169

QUAL PAMS

Tc W/R

LP A

266 F

LP B

257 F

LP C

275 F

LP D

340 F

RCS PRESS

232 PSIG

MAX QUAD T/C AVG 355 F

SUBCOOL 38 F

RVWI

UPPER HD 100 %

PLENUM 100 %

PRZL LVL

0.0 %

Th W/R

AFW FLOW

0 GPM

401 F

0 GPM

385 F

0 GPM

400 F

0 GPM

371 F

SG PRESS

668 PSIG

SG LVL

W/R 61.2 %

N/R 51.0 %

803 PSIG

W/R 56.6 %

N/R 34.8 %

643 PSIG

W/R 61.5 %

N/R 50.8 %

231 PSIG

W/R 62.5 %

N/R 47.8 %

NUC PWR

UPPER RNG FLUX	1.6E-9PN	%
LOWER RNG FLUX	1.6E0	CPS
SUR	-0.0	DPM

CNTMT

PRESS	6.0	PSIG
EXTD RNG PRESS	6	PSIG
WTR LVL W/R AUXT HT	27	IN
NORM SUMP LVL	72PN	IN
SEC SUMP LVL	12	IN
H2 CONC	0.0	%
HI RNG RAD	2.7E3	R/HR

TK LVL	KGAL
RWST	268
AFWST	504

SEC RAD uCi/cc

SG	BLWDN	STM LN
A	2.64E-4	1.39E-2
B	2.64E-4	1.39E-2
C	2.64E-4	1.39E-2
D	2.64E-4	1.39E-2

S C H P Z I R TOP

C44

AMS 6135/7169

QUAL PAMS

Tc W/R

LP A

206 F

LP B

273 F

LP C

179 F

LP D

353 F

RCS PRESS

273 PSIG

MAX QUAD T/C AVG 308 F

SUBCOOL 101 F

RVWI

UPPER HD 100 %

PLENUM 100 %

PRZL LVL

7.0 %

Th W/R

AFW FLOW

0 GPM

414 F

0 GPM

414 F

0 GPM

414 F

0 GPM

345 F

SG PRESS

641 PSIG

SG LVL

W/R 61.6 %

N/R 50.1 %

737 PSIG

W/R 57.3 %

N/R 34.[illegible] %

617 PSIG

W/R 62.0 %

N/R 50.3 %

219 PSIG

W/R 62.6 %

N/R 47.4 %

NUC PWR

UPPER RNG FLUX	1.6E-9PN	%
LOWER RNG FLUX	1.6E0	CPS
SUR	-0.0	DPM

CNTMT

PRESS	5.5	PSIG
EXTD RNG PRESS	6	PSIG
WTR LVL W/R AVG HI	30	IN
NORM SUMP LVL	72PN	IN
SEC SUMP LVL	12	IN
HD CONC	0.0	%
HI RNG RAD	3.2E3	R/HR

TK LVL	KGAL
RWST	253
AFWST	504

SEC RAD uCi/cc

SG	BLWDN	STM LN
A	2.64E-4	1.39E-2
B	2.64E-4	1.39E-2
C	2.64E-4	1.39E-2
D	2.64E-4	1.39E-2

S C H P Z I R TOP

C45

NRAD (8015)	RADIOACTIVITY STATUS [R]	UNIT 1

RCB PURGE

[redacted]

	uCi/cc
RT-8012	2.9E-1
RT-8013	3.1E-1

CR/EAB VENT

	uCi/cc
RT-8033	1.7E-6
RT-8034	1.4E-6

SFP EXHAUST

	uCi/cc
RT-8035	1.2E-6
RT-8036	1.0E-6

[illegible] VENT
(RT-8010)

	uCi/cc
PARTICULATE	4.0E-5
IODINE	4.7E-3
NOBLE GAS	0.0E0PN
	uCi/sec
RELEASE RATE	1.2E6

RCB ATMOSPHERE
(RT-8011)

	uCi/cc
PARTICULATE	4.1E-11
IODINE	1.1E-6
NOBLE GAS	1.9E-2

CNTMT HI RANGE

	R/HR
RT-8050	3.2E3
RT-8051	3.2E3

[illegible] VAC PUMP
(RT-8024)

	uCi/cc
NOBLE GAS	0.0E0PN
	uCi/sec
RELEASE RATE	1.0E-3

STM LINE
(RT-8046 thru 8049)

	uCi/cc
SG A	1.3E-2
SG B	1.3E-2
SG C	1.3E-2
SG D	1.3E-2

SG BLOWDOWN
(RT-8022 thru 8025)

	uCi/cc
SG A	2.6E-4
SG B	2.6E-4
SG C	2.6E-4
SG D	2.6E-4

S C H P Z I R TOP

C46

AMS 8135/71A9

QUAL PAMS

W/R

LP A

200 F

LP B

258 F

LP C

144 F

LP D

310 F

RCS PRESS

249 PSIG

MAX QUAD
T/C AVG 285 F

SUBCOOL 116 F

RVWI

UPPER HD %

PLENUM 100 %

PRZL
LVL

% Th W/R

AFW FLOW

0 GPM

349 F

SG PRESS

612 PSIG

SG LVL

W/R 61.8 %

N/R 49.2 %

0 GPM

365 F

715 PSIG

W/R 57.6 %

N/R [illegible] %

0 GPM

348 F

587 PSIG

W/R 62.0 %

N/R 49.4 %

0 GPM

358 F

212 PSIG

W/R 62.6 %

N/R 47.1 %

NUC PWR

UPPER RNG FLUX	1.6E-9PN	%
LOWER RNG FLUX	1.6E0	CPS
SUR	0.0	DPM

CNTMT

[illegible]	4.3	PSIG
EXTD RNG PRESS	4	PSIG
WTR LVL W/R AFT HI	33	IN
NORM SUMP LVL	72PN	IN
SEC SUMP LVL	12	IN
H2 CONC	0.0	%
HI RNG RAD	3.8E3	R/HR

TK LVL	KGAL
RWST	237
AFWST	504

SEC RAD uCi/cc

SG	BLWDN	STM LN
A	2.64E-4	1.39E-2
B	2.64E-4	1.39E-2
C	2.64E-4	1.39E-2
D	2.64E-4	1.39E-2

S C H P Z I R TOP

C47

NRAD
(8015)

RADIOACTIVITY STATUS [R]

UNIT 1

RCB PURGE

[redacted]

	uCi/cc
RT-8012	2.9E-1
RT-8013	3.1E-1

CR/EAB VENT

	uCi/cc
RT-8033	1.7E-6
RT-8034	1.4E-6

SFP EXHAUST

	uCi/cc
RT-8035	1.2E-6
RT-8036	1.0E-6

[illegible] VENT
(RT-8010)

	uCi/cc
PARTICULATE	4.0E-5
IODINE	4.6E-3
NOBLE GAS	0.0E0PN
	uCi/sec
RELEASE RATE	3.5E6

RCB ATMOSPHERE
(RT-8011)

	uCi/cc
PARTICULATE	4.1E-11
IODINE	1.1E-6
NOBLE GAS	1.9E-2

CNTMT HI RANGE

	R/HR
RT-8050	3.8E3
RT-8051	3.8E3

[illegible] VENT [illegible]
(RT-8024)

	uCi/cc
NOBLE GAS	0.0E0PN
	uCi/sec
RELEASE RATE	1.0E-3

STM LINE
(RT-8046 thru 8049)

	uCi/cc
SG A	1.3E-2
SG B	1.3E-2
SG C	1.3E-2
SG D	1.3E-2

SG BLOWDOWN
(RT-8022 thru 8025)

	uCi/cc
SG A	2.6E-4
SG B	2.6E-4
SG C	2.6E-4
SG D	2.6E-4

S C H P Z I R TOP

C48

PAMS 6135/7189

QUAL PAMS

Tc W/R

LP A

145 F

LP B

245 F

LP C

97 F

LP D

279 F

RCS PRESS

235 PSIG

MAX QUAD T/C AVG 259 F

SUBCOOL 136 F

RVWL

UPPER HD 100 %

PLENUM 100 %

PRZL LVL

[illegible] %

Th W/R 292 F

AFW FLOW

0 GPM

0 GPM

401 F

0 GPM

322 F

0 GPM

360 F

SG PRESS

584 PSIG

SG LVL

W/R 61.8 %

N/R 47.7 %

694 PSIG

W/R 57.7 %

N/R 32.8 %

560 PSIG

W/R 62.3 %

N/R 48.1 %

209 PSIG

W/R 62.6 %

N/R 46.8 %

NUC PWR

UPPER RNG FLUX	1.7E-9PN	%
LOWER RNG FLUX	1.7E0	CPS
SUR	0.0	DPM

CNTMT

PRESS	3.1	PSIG
[illegible] RNG PRESS	3	PSIG
WTR LVL W/R AUXT HI	33	IN
NORM SUMP LVL	72PN	IN
SEC SUMP LVL	12	IN
H2 CONC	0.0	%
HI RNG RAD	4.3E3	R/HR

TK LVL KGAL

RWST	215
AFWST	504

SEC RAD uCi/cc

SG	BLWDN	STM LN
A	2.64E-4	1.39E-2
B	2.64E-4	1.39E-2
C	2.64E-4	1.39E-2
D	2.64E-4	1.39E-2

S C H P Z I R TOP

C49

NRAD (8015)

RADIOACTIVITY STATUS [R]

UNIT 1

RCB PURGE

[redacted]

	uCi/cc
RT-8012	2.9E-1
RT-8013	3.1E-1

CR/EAB VENT

	uCi/cc
RT-8033	1.7E-6
RT-8034	1.4E-6

SFP EXHAUST

	uCi/cc
RT-8035	1.2E-6
RT-8036	1.0E-6

UNIT 1 VENT
(RT-8010)

	uCi/cc
PARTICULATE	4.0E-5
IODINE	4.2E-3
NOBLE GAS	0.0E0PN
	uCi/sec
RELEASE RATE	4.9E6

RCB ATMOSPHERE
(RT-8011)

	uCi/cc
PARTICULATE	4.1E-11
IODINE	1.1E-6
NOBLE GAS	1.9E-2

CNTMT HI RANGE

	R/HR
RT-8050	4.3E3
RT-8051	4.3E3

UNIT 2 VAC PUMP
(RT-8027)

	uCi/cc
NOBLE GAS	0.0E0PN
	uCi/sec
RELEASE RATE	1.0E-3

STM LINE
(RT-8046 thru 8049)

	uCi/cc
SG A	1.3E-2
SG B	1.3E-2
SG C	1.3E-2
SG D	1.3E-2

SG BLOWDOWN
(RT-8022 thru 8025)

	uCi/cc
SG A	2.6E-4
SG B	2.6E-4
SG C	2.6E-4
SG D	2.6E-4

S C H P Z I R TOP

C5d

AMS 6135/7169

QUAL PAMS

C W/R		
LP A	118	F
LP B	181	F
LP C	104	F
LP D	247	F

RCS PRESS 225 PSIG

MAX QUAD T/C AVG	237	F
SUBCOOL	155	F
RV WL		
UPPER HD		%
PLENUM	100	%

PRZL LVL 0.0 %

Th W/R

AFW FLOW

0	GPM	
305	F	
0	GPM	
297	F	
0	GPM	
281	F	
0	GPM	
360	F	

SG PRESS

559	PSIG	
SG LVL		
W/R	62.2	%
N/R	46.4	%
669	PSIG	
W/R	57.8	%
N/R	31.4	%
535	PSIG	
W/R	62.6	%
N/R	47.1	%
205	PSIG	
W/R	62.6	%
N/R	46.4	%

NUC PWR

UPPER RNG FLUX	1.8E-9PN	%
LOWER RNG FLUX	1.8E0	CPS
SUR	0.0	DPM

CNTMT

PRESS	2.2	PSIG
EXTD RNG PRESS	2	PSIG
WTR LVL WSR ABST HI	36	IN
NORM SUMP LVL	72PN	IN
SEC SUMP LVL	12	IN
H2 CONC	0.0	%
HI RNG RAD	4.9E3	R/HR

TK LVL	KGAL
RWST	192
AFWST	504

SEC RAD uCi/cc

SG	BLWDN	STM LN
A	2.64E-4	1.39E-2
B	2.64E-4	1.39E-2
C	2.64E-4	1.39E-2
D	2.64E-4	1.39E-2

S C H P Z I R TOP

C51

NRAD (8015)

RADIOACTIVITY STATUS [R]

UNIT 1

RCB PURGE

[redacted]

	uCi/cc
RT-8012	2.9E-1
RT-8013	3.1E-1

CR/EAB VENT

	uCi/cc
RT-8033	1.7E-6
RT-8034	1.4E-6

SFP EXHAUST

	uCi/cc
RT-8035	1.2E-6
RT-8036	1.0E-6

UNIT VENT
(RT-8010)

	uCi/cc
PARTICULATE	4.0E-5
IODINE	3.7E-3
NOBLE GAS	0.0E0PN
	uCi/sec
RELEASE RATE	1.4E7

RCB ATMOSPHERE
(RT-8011)

	uCi/cc
PARTICULATE	4.1E-11
IODINE	1.1E-6
NOBLE GAS	1.9E-2

CNTMT HT RANGE

	R/HR
RT-8050	4.9E3
RT-8051	4.9E3

[illegible] VAC PUMP
(RT-8027)

	uCi/cc
NOBLE GAS	0.0E0PN
	uCi/sec
RELEASE RATE	1.0E-3

STM LINE
(RT-8046 thru 8049)

	uCi/cc
SG A	1.3E-2
SG B	1.3E-2
SG C	1.3E-2
SG D	1.3E-2

SG BLOWDOWN
(RT-8022 thru 8025)

	uCi/cc
SG A	2.6E-4
SG B	2.6E-4
SG C	2.6E-4
SG D	2.6E-4

S C H P Z I R TOP

C52

AMS 8135/7159

QUAL PAMS

Tc W/R

LP A

123 F

LP B

167 F

LP C

107 F

LP D

239 F

RCS PRESS

250 PSIG

MAX QUAD T/C AVG 221 F

SUBCOOL 180 F

RVWI

UPPER HD %

PLENUM 100 %

PRZL LVL

0.0 %

Th W/R 289 F

AFW FLOW

SG PRESS

0 GPM 539 PSIG

SG LVL

W/R 62.5 %

N/R 46.0 %

0 GPM 648 PSIG

261 F

W/R 57.9 %

N/R 30.4 %

0 GPM 515 PSIG

288 F

W/R 62.8 %

N/R 46.9 %

0 GPM 202 PSIG

366 F

W/R 62.6 %

N/R 46.1 %

NUC PWR

UPPER RNG FLUX	1.9E-9PN	%
LOWER RNG FLUX	1.8E0	CPS
SUR	0.0	DPM

CNTMT

PAPER	1.3	PSIG
CNTMT RNG PRESS	1	PSIG
WTR LVL W/R ABOVE HC	39	IN
NORM SUMP LVL	72PN	IN
SEC SUMP LVL	12	IN
H2 CONC	0.0	%
HI RNG RAD	5.4E3	R/HR

TK LVL	KGAL
RWST	170
AFWST	504

SEC RAD uCi/cc

SG	BLWDN	STM LN
A	2.64E-4	1.39E-2
B	2.64E-4	1.39E-2
C	2.64E-4	1.39E-2
D	2.64E-4	1.39E-2

S C H P Z I R TOP

C53

NRAD (8015)	RADIOACTIVITY STATUS [R]	UNIT 1

RCB PURGE

[redacted]

	uCi/cc
RT-8012	2.9E-1
RT-8013	3.1E-1

CR/EAB VENT

	uCi/cc
RT-8033	1.7E-6
RT-8034	1.4E-6

SFP EXHAUST

	uCi/cc
RT-8035	1.2E-6
RT-8036	1.0E-6

UNIT VENT
(RT-8010)

	uCi/cc
PARTICULATE	4.0E-5
IODINE	6.0E-3
NOBLE GAS	0.0E0PN
	uCi/sec
RELEASE RATE	2.3E7

RCB ATMOSPHERE
(RT-8011)

	uCi/cc
PARTICULATE	4.1E-11
IODINE	1.1E-6
NOBLE GAS	1.9E-2

CNTMT HI RANGE

	R/HR
RT-8050	5.4E3
RT-8051	5.4E3

[illegible] VAC PUMP
(RT-8024)

	uCi/cc
NOBLE GAS	0.0E0PN
	uCi/sec
RELEASE RATE	1.0E-3

STM LINE
(RT-8046 thru 8049)

	uCi/cc
SG A	1.3E-2
SG B	1.3E-2
SG C	1.3E-2
SG D	1.3E-2

SG BLOWDOWN
(RT-8022 thru 8025)

	uCi/cc
SG A	2.6E-4
SG B	2.6E-4
SG C	2.6E-4
SG D	2.6E-4

AMS 6139/7169

QUAL PAMS

Tc W/R

LP A

120 F

LP B

160 F

LP C

107 F

LP D

206 F

RCS PRESS

255 PSIG

MAX QUAD T/C AVG 219 F

SUBCOOL 184 F

RVWI

UPPER HD 100 %

PLENUM 100 %

PRZL LVL

[illegible] %

Th W/R 291 F

AFW FLOW

0 GPM

0 GPM

262 F

0 GPM

292 F

0 GPM

369 F

SG PRESS

520 PSIG

SG LVL

W/R 62.7 %

N/R 45.9 %

629 PSIG

W/R 58.0 %

N/R 30.4 %

496 PSIG

W/R 62.8 %

N/R 46.9 %

198 PSIG

W/R 62.6 %

N/R 45.8 %

NUC PWR

UPPER RNG FLUX	1.9E-9PN	%
LOWER RNG FLUX	1.9E0	CPS
SUR	0.0	DPM

CNTMT

PRESS	0.8	PSIG
SUMP RNG PRESS	0	PSIG
WTR LVL W/R ANCT PL	39	IN
NORM SUMP LVL	72PN	IN
SEC SUMP LVL	12	IN
H2 CONC	0.0	%
HI RNG RAD	6.0E3	R/HR

TK LVL	KGAL
RWST	152
AFWST	504

SEC RAD uCi/cc

SG	BLWDN	STM LN
A	2.64E-4	1.39E-2
B	2.64E-4	1.39E-2
C	2.64E-4	1.39E-2
D	2.64E-4	1.39E-2

S C H P Z I R TOP

C55

NRAD (8015)

RADIOACTIVITY STATUS [R]

UNIT 1

RCB PURGE

[redacted]

	uCi/cc
RT-8012	2.9E-1
RT-8013	3.1E-1

CR/EAB VENT

	uCi/cc
RT-8033	1.7E-6
RT-8034	1.4E-6

SFP EXHAUST

	uCi/cc
RT-8035	1.2E-6
RT-8036	1.0E-6

UNIT VENT
(RT-8010)

	uCi/cc
PARTICULATE	4.0E-5
IODINE	4.6E-3
NOBLE GAS	0.0E0PN
	uCi/sec
RELEASE RATE	1.1E7

RCB ATMOSPHERE
(RT-8011)

	uCi/cc
PARTICULATE	4.1E-11
IODINE	1.1E-6
NOBLE GAS	1.9E-2

CNTMT HI RANGE

	R/HR
RT-8050	6.0E3
RT-8051	6.0E3

FUEL HANDLING BLDG
(RT-8024)

	uCi/cc
NOBLE GAS	0.0E0PN
	uCi/sec
RELEASE RATE	1.0E-3

STM LINE
(RT-8046 thru 8049)

	uCi/cc
SG A	1.3E-2
SG B	1.3E-2
SG C	1.3E-2
SG D	1.3E-2

SG BLOWDOWN
(RT-8022 thru 8025)

	uCi/cc
SG A	2.6E-4
SG B	2.6E-4
SG C	2.6E-4
SG D	2.6E-4

AMS 8135/7159

QUAL PAMS

C W/R		
LP A	117	F
LP B	150	F
LP C	106	F
LP D	178	F

RCS PRESS 255 PSIG

MAX QUAD T/C AVG	217	F
SUBCOOL	185	F
NVWL		
UPPER HD	100	%
PLENUM	100	%

PRZL LVL 100 %

Th W/R

AFW FLOW

0	GPM	
290	F	
0	GPM	
264	F	
0	GPM	
293	F	
0	GPM	
365	F	

SG PRESS

502	PSIG	
SG LVL		
W/R	62.7	%
N/R	45.9	%
612	PSIG	
W/R	58.0	%
N/R	30.3	%
477	PSIG	
W/R	62.9	%
N/R	46.9	%
196	PSIG	
W/R	62.6	%
N/R	45.6	%

NUC PWR

UPPER RNG FLUX	1.9E-9PN	%
LOWER RNG FLUX	1.9E0	CPS
SUR	0.0	DPM

CNTMT

DBPS	0.4	PSIG
CNTMT RNG PRESS	0	PSIG
WTR LVL W/R AUT HI	42	IN
NORM SUMP LVL	72PN	IN
SFT SUMP LVL	12	IN
H2 CONC	0.0	%
HI RNG RAD	5.9E3	R/HR

TK LVL KGAL

RWST	134
AFWST	504

SEC RAD uCi/cc

SG	BLWDN	STM LN
A	2.64E-4	1.39E-2
B	2.64E-4	1.39E-2
C	2.64E-4	1.39E-2
D	2.64E-4	1.39E-2

S C H P Z I R TOP

C57

NRAD (8015)

RADIOACTIVITY STATUS [R]

UNIT 1

RCB PURGE

[redacted]

	uCi/cc
RT-8012	2.9E-1
RT-8013	3.1E-1

CR/EAB VENT

	uCi/cc
RT-8033	1.7E-6
RT-8034	1.4E-6

SFP EXHAUST

	uCi/cc
RT-8035	1.2E-6
RT-8036	1.0E-6

UNIT VENT
(RT-8010)

	uCi/cc
PARTICULATE	4.0E-5
IODINE	3.2E-3
NOBLE GAS	0.0E0PN
	uCi/sec
RELEASE RATE	9.0E5

RCB ATMOSPHERE
(RT-8011)

	uCi/cc
PARTICULATE	4.1E-11
IODINE	1.1E-6
NOBLE GAS	1.9E-2

CNTMT HI RANGE

	R/HR
RT-8050	5.9E3
RT-8051	5.9E3

LINEUP WAT TEMP
(RT-8027)

	uCi/cc
NOBLE GAS	0.0E0PN
	uCi/sec
RELEASE RATE	1.0E-3

STM LINE
(RT-8046 thru 8049)

	uCi/cc
SG A	1.3E-2
SG B	1.3E-2
SG C	1.3E-2
SG D	1.3E-2

SG BLOWDOWN
(RT-8022 thru 8025)

	uCi/cc
SG A	2.6E-4
SG B	2.6E-4
SG C	2.6E-4
SG D	2.6E-4

AMS 8195/7169

QUAL PAMS

Th W/R

LP A

113 F

LP B

141 F

LP C

105 F

LP D

189 F

RCS PRESS

254 PSIG

MAX QUAD T/C AVG 215 F

SUBCOOL 187 F

RVWL

UPPER HD 100 %

PLENUM 100 %

PRZL LVL

26.1 %

Th W/R

AFW FLOW

0 GPM

290 F

0 GPM

265 F

0 GPM

294 F

0 GPM

353 F

SG PRESS

485 PSIG

595 PSIG

459 PSIG

194 PSIG

SG LVL

W/R	62.7	%
N/R	45.9	%
W/R	58.1	%
N/R	30.2	%
W/R	62.9	%
N/R	46.9	%
W/R	62.6	%
N/R	45.3	%

NUC PWR

UPPER RNG FLUX	2.0E-9PN	%
LOWER RNG FLUX	2.0E0	CPS
SUR	0.0	DPM

CNTMT

PRESS	0.1	PSIG
CNTD RNG PRESS	0	PSIG
WTR LVL W/R ADJ HI	42	IN
NORM SUMP LVL	72PN	IN
SEC SUMP LVL	12	IN
H2 CONC	0.0	%
HI RNG RAD	5.6E3	R/HR

TK LVL KGAL

RWST	117
AFWST	504

SEC RAD uCi/cc

SG	BLWDN	STM LN
A	2.64E-4	1.39E-2
B	2.64E-4	1.39E-2
C	2.64E-4	1.39E-2
D	2.64E-4	1.39E-2

S C H P Z I R TOP

C59

NRAD (8015)	RADIOACTIVITY STATUS [R]	UNIT 1

RCB PURGE

[redacted]

	uCi/cc
RT-8012	2.9E-1
RT-8013	3.1E-1

CR/EAB VENT

	uCi/cc
RT-8033	1.7E-6
RT-8034	1.4E-6

SFP EXHAUST

	uCi/cc
RT-8035	1.2E-6
RT-8036	1.0E-6

[illegible] VENT
(RT-8010)

	uCi/cc
PARTICULATE	4.0E-5
IODINE	8.9E-6
NOBLE GAS	0.0E0PN
	uCi/sec
RELEASE RATE	6.0E2

RCB ATMOSPHERE
(RT-8011)

	uCi/cc
PARTICULATE	4.1E-11
IODINE	1.1E-6
NOBLE GAS	1.9E-2

CNTMT HI RANGE

	R/HR
RT-8050	5.6E3
RT-8051	5.6E3

[illegible] VA [illegible]
(RT-8023)

	uCi/cc
NOBLE GAS	0.0E0PN
	uCi/sec
RELEASE RATE	1.0E-3

STM LINE
(RT-8046 thru 8049)

	uCi/cc
SG A	1.3E-2
SG B	1.3E-2
SG C	1.3E-2
SG D	1.3E-2

SG BLOWDOWN
(RT-8022 thru 8025)

	uCi/cc
SG A	2.6E-4
SG B	2.6E-4
SG C	2.6E-4
SG D	2.6E-4

PAMS 6135/7169

QUAL PAMS

Th W/R

LP A

111 F

LP B

133 F

LP C

104 F

LP D

200 F

RCS PRESS

254 PSIG

MAX QUAD T/C AVG 213 F

SUBCOOL 190 F

RVWI

UPPER HD %

PLENUM 100 %

PRZL LVL

35.1 %

Th W/R

AFW FLOW

SG PRESS

0 GPM 468 PSIG

290 F

SG LVL

W/R 62.7 %

N/R 46.0 %

0 GPM 580 PSIG

266 F

W/R 58.2 %

N/R 30.2 %

0 GPM 442 PSIG

299 F

W/R 62.9 %

N/R 46.9 %

0 GPM 192 PSIG

345 F

W/R 62.6 %

N/R 45.1 %

NUC PWR

UPPER RNG FLUX	2.0E-9PN	%
LOWER RNG FLUX	2.0E0	CPS
SUR	0.0	DPM

CNTMT

PRESS	0.0	PSIG
CNTMT RNG PRESS	0	PSIG
WTR LVL WRT AUX FLR	45	IN
NORM SUMP LVL	72PN	IN
SEC SUMP LVL	12	IN
H2 CONC	0.0	%
HI RNG RAD	5.3E3	R/HR

TK LVL KGAL

RWST	99
AFWST	504

SEC RAD uCi/cc

SG	BLWDN	STM LN
A	2.64E-4	1.39E-2
B	2.64E-4	1.39E-2
C	2.64E-4	1.39E-2
D	2.64E-4	1.39E-2

S C H P Z I R TOP

C61

NRAD (5015)

RADIOACTIVITY STATUS [R]

UNIT 1

RCB PURGE

[redacted]

	uCi/cc
RT-8012	2.9E-1
RT-8013	3.1E-1

CR/EAB VENT

	uCi/cc
RT-8033	1.7E-6
RT-8034	1.4E-6

SFP EXHAUST

	uCi/cc
RT-8035	1.2E-6
RT-8036	1.0E-6

[illegible] VENT (RT-8010)

	uCi/cc
PARTICULATE	4.0E-5
IODINE	2.1E-11
NOBLE GAS	0.0E0PN
	uCi/sec
RELEASE RATE	1.0E1

RCB ATMOSPHERE (RT-8011)

	uCi/cc
PARTICULATE	4.1E-11
IODINE	1.1E-6
NOBLE GAS	1.9E-2

CNTMT HI RANGE

	R/HR
RT-8050	5.3E3
RT-8051	5.3E3

[illegible] VA [illegible] (RT-8027)

	uCi/cc
NOBLE GAS	0.0E0PN
	uCi/sec
RELEASE RATE	6.7E0

STM LINE (RT-8046 thru 8049)

	uCi/cc
SG A	1.3E-2
SG B	1.3E-2
SG C	1.3E-2
SG D	1.3E-2

SG BLOWDOWN (RT-8022 thru 8025)

	uCi/cc
SG A	2.6E-4
SG B	2.6E-4
SG C	2.6E-4
SG D	2.6E-4

5.0 EVALUATOR/CONTROLLER INSTRUCTIONS

In addition to taking detailed notes each evaluator/controller shall complete an objective evaluation form and/or evaluation checklists contained in this subsection of the scenario manual to document that the Exercise objectives set forth in Section 2.0 of this scenario manual were addressed, and that any requirements for corrective actions are identified.

The evaluator/controller shall complete the "Objective Evaluation Form" for the overall performance of the participants in the area of evaluation. This form should highlight those activities in which good practices or improved performance was observed as well as any activities in which problems were noted. For any objective marked as a Weakness, all circumstances must be noted. Evaluator/Controller shall provide this information to the lead controller.

Evaluator/Controllers shall also provide the lead controller with a detailed listing of problem areas or areas requiring improvement that were noted during the course of the exercise using "Evaluation Checklists" and "Evaluator/ Controller Logs".

All completed logs, forms and checklists shall be provided to the lead controllers for use in preparing a formal written critique. Prior to the formal critique, each lead controller shall summarize the facility Controller/Evaluator findings. The lead controller has the responsibility of assembling all facility critique information for the Exercise coordinator, as well as delivery of all appropriate paperwork generated during the course of the Exercise.

Any objective evaluation marked less than satisfactory shall be addressed at the formal critique. The formal critique process SHALL determine after reviewing all appropriate circumstances whether a weakness or deficiency actually occurred.

EVALUATION CRITERIA

***Objective Met-**
The ERO performed the applicable emergency plan or procedure requirements to satisfy the stated objective demonstration criteria. Objectives met may be categorized into two classifications:

Strength
A strength is an objective or work practice performed exceptionally well during the Exercise or exercise. In order to be considered as a strength, the objective or practice must be better than the required level of performance. Identification of strengths is primarily intended to provide the Station and support facilities a measure of readiness in comparison to previous years.

Satisfactory
Satisfactory is acceptable performance within the expected level. The objective was clearly met.

Minor Problems
Problems were identified that did not prevent the objective from being satisfactorily demonstrated but need to be corrected so that they are not repeated.

***Objective partially met-**

The ERO performed most of the applicable emergency plan or procedure requirements. However, portions of the stated objective demonstration criteria were not satisfied.

***Objective not met-**

The ERO did not perform the critical emergency plan procedure requirements or did not implement the integrated processes necessary to satisfy the stated objective demonstration criteria. Objectives not met may be categorized into two classifications:

Weakness
An item which indicate that the demonstrated level of response may have precluded effective implementation of the Emergency Plan in the event of an actual emergency. Weaknesses require formal corrective action. Recommended corrective actions are tracked as open commitments until the weakness is resolved.

Deficiency
An item which indicates that the demonstrated level of response would have precluded effective implementation of the Emergency Plan in the event of an actual emergency. Deficiencies require prompt formal corrective action and recommended corrective actions are tracked as open commitments.

5.1 Controllers/Evaluators List

Drill Coordinator	Vivian Wagnon
Control Room/Simulator	
Lead	Fred Puleo
Evaluator	Jay Phelps
Booth	Ken Struble
Booth	Monty Wong
Plant Operators	(5) TBD
Technical Support Center	
Lead	Max Keyes
Evaluator	Ken Coats
Engineering	Dave Rencurrel
Health Physics	Bill Bullard
Notifications, Security, Admin	Cully Boudreaux
Operations Support Center	
Lead	Charles Lunsford
Evaluator	Kevin Richards
Health Physics	Keith Kleinhans
Health Physics	Brian Kruppa
Health Physics	Michael Tomek
Health Physics	Gordon Williams
Health Physics	Chip Citzler
I&C	Jeff Lovejoy
I&C	George Rozner
Electrical	Dave Thorton
Electrical	Brent Heraly
Mechanical	Don Lankford
Mechanical	Bill Bealefield
Miscl	Dave Fisher
Emergency Operations Facility	
Lead	Leo Meier
Evaluator	Ted Cloninger
Dose Assessment	Kim Reynolds
Notifications, support, admin	Ken Cope
Offsite Teams	Bill Smith
NSC Engineers	
Lead	Bill Humble
Security	
Lead	Dan Bilski
SAS	Edith Oakley
East Gatehouse/SFS Office	Arnold (AJ) Hebert

Joint Information Center

Lead	Lurinda Barton
Evaulator	Tom Underwood
Controller-Media Relations	Logan Giesie
Controller-Spokesperson	Will Jump
Controller-Admin & MMRC	Matt Henderson
Mock Media-Lead	Mike Meier
	Ben Whitmer
	Mike Momsen
	Laura Brieden
	Alan Mikus
	Cathy Gann
	Kim Kieler

Emergency Operations Center

Lead	Joe Enoch
Evaluator	Robbie McAnnally

Reception Center/Traffic Control

Controller/Evaluator-Lead	Clem Morgan
Controller	Debbie Hobbins
Controller	Ron Bradford
Controller	Ken Smith
Controller	Frank Cox

Simulators (20):

Connie McKee	Minnie Gonzales
Marisa Johnson	Nancy Kubecka
Kenny Williams	Kelly Ross
Roy Hill	Angela Fletcher
Rhonda Ringo	Vicki Crain
Jean Franklin	Craig Kraft
Patty Ragsdale	Dan Clark
Terry Brass-Nash	Debbie Carroll
Susan Branson	Tina Matura
Sean Hamilton	Sandy Meyerdirk
James Scheel	Gwen Finley
Margie Jenewein	Jim Bohli
Karen Bishop	Shirley Morris
Karen Wheaton	Vicki Patton

KMKS Radio

Controller	Sherry Durett

Bus Driver

Controller	Gary Zink

Department of Public Safety

Communications/Notifications	Mark Glover

Telephone Control Cell

Controller - Lead	Stacia Murry
Controller-Player	Sheila Ormand
Controller-Player	Shanda Maxey
Controller-Player	Reva Smith
Controller-Player	Patty Worthey
Controller-Player	Connie Miller
Controller-NRC Headquarters	Bruce Mankey

TBD- to be determined

5.2 Exercise Participants

FACILITY	POSITION	NAME
EOF	ADMIN STAFF 1	WILLIAMS,DRENDA
	ADMIN STAFF 2	MUNOZ,MAGGIE
	ASSISTANT DOSE ASSESSMENT	TATHAM,ALICIA T
	ASSISTANT LICENSING DIRECTOR	ARRINGTON,PAMELA LAJEAN
	ASSISTANT RADIOLOGICAL DIRECTOR	HILSCHER,KENNETH
	ASSISTANT SUPPORT ORGANIZATION DIRECTOR	TENNANT JR,RAYMOND JOHN
	COMMUNICATIONS SYSTEM SUPERVISOR	PLUMMER,GARY LEE
	DEPUTY EOF DIRECTOR	JORDAN,THOMAS JAMES
	DOSE ASSESSMENT SPECIALIST	EARLS,LEONARD M
	ED ADMIN. ASSISTANT/LOGKEEPER	RITTENBERRY,LINDA JEAN
	EMPLOYEE SUPPORT	ROTHER,DORIS VELL
	ENGINEERING ASSISTANT	MURRY,CRAIG ALAN
	EOF DIRECTOR	MANGAN,FLORENCE K
	EOF LIAISON	HYDE,RONALD GENE
	FEDERAL RESPONSE AGENCY LIAISON	TRAVIS,PEGGY LOFTON
	INFORMATION SYSTEMS ANALYST	GOODRICH,KATHY K
	LICENSING DIRECTOR	HEAD,SCOTT MALCOLM
	MATAGORDA COUNTY EOC LIAISON	RODGERS,RICKY C
	MATERIALS ENGINEER	THRASH,TERRY E
	OFFSITE AGENCY COMMUNICATOR	JOHNSON,MARILYN KAY
	OFFSITE FIELD TEAM 1	HUBENAK,DOUGLAS J
	OFFSITE FIELD TEAM 2	DENNIS,THOMAS
	OFFSITE FIELD TEAM DRIVER 1	CURRY,WILLIAM
	OFFSITE FIELD TEAM DRIVER 2	TIDWELL,JAMES S
	OFFSITE FIELD TEAM SUPERVISOR	SEPULVEDA,JOSEPH
	PROCUREMENT/RESOURCES SUPERVISOR	MONTGOMERY,DARELL W
	PURCHASER	BARNES,THELMA LEE
	RAD STAFF 1	CAMPBELL,CHRIS
	RADIOLOGICAL DIRECTOR	POWELL,GERALD TIMOTHY
	RECEPTION CENTER LIAISON	VALLEJO III,EDWARD
	RECORDS SUPERVISOR	SMITH,LONA
	SITE PUBLIC AFFAIRS ADMIN ASSISTANT	CHAMBERLAIN,PANDY
	SITE PUBLIC AFFAIRS COORDINATOR	DEFREES,MICHAEL D
	SITE PUBLIC AFFAIRS SPECIALIST	CONAWAY,EDWARD C.
	STATE OF TEXAS EOC LIAISON	PRATER,RICHARD LEE
	STATUS BOARD KEEPER - RAD	MORENO,DORA
	STATUS BOARD KEEPER 1	CHAKRAVORTY,MANAS KUMAR
	STATUS BOARD KEEPER 2	FRAHM,TRIPP M
	SUPPORT ORGANIZATION DIRECTOR	MALLEN,FRANK
	SUPPORT ORIENTATION COORDINATOR	SCOGGINS,DOYLE KEITH
	SYSTEM STATUS EVALUATOR	PAGE III,JAMES R
	TECHNICAL DIRECTOR	HOUSE,KENNETH D
	TECHNICAL STAFF 1	CHITWOOD,GREGORY S
JIC	ADMIN STAFF 1	STEVENS,TAMMY MICHELE
	ADMIN STAFF 2	HAWKINS,SHERRY GAIL
	ADMIN STAFF 3	ELLIOTT,LORI D
	ADMIN STAFF 4	BLOOMFIELD,LINC N
	ADMIN STAFF 5	DEFREES,MARTHA LOUISE
	ADMIN STAFF 6	CHILDRES,NANCY A
	ADMIN STAFF 7	JANAK,RUSSELL E

5.2 Exercise Participants

FACILITY	POSITION	NAME
	AUDIO-VISUAL SPECIALIST	MCGEHEARTY,MICHAEL JEROME
	INTERNET/GRAPHICS TECHNICIAN	PEREZ,ANA MARIA
	JOINT INFORMATION CENTER ADMINISTRATIVE MANAGER	LASAINT,BOBBIE RUTH
	JOINT INFORMATION CENTER DIRECTOR	REDD,WANDA JEAN
	MEDIA MONITORING/RUMOR CONTROL MANAGER	JANAK,CHERYL
	MEDIA RELATIONS MANAGER	MARKHAM,WILLIAM D
	MM/RC STAFF 1	HOPES,JANICE STINE
	MM/RC STAFF 2	WESTMORELAND,REID B
	MM/RC STAFF 3	PETTY,PHILLIP ERWIN
	MM/RC STAFF 4	FRANKLIN JR,RICHARD E
	MM/RC STAFF 5	RESSLER,MONICA L
	MM/RC STAFF 6	MILLER,TRUDA A
	MR ANI LIAISON	VERBECK,BRENDA SUE
	MR STAFF 1	KOSER,THEODORE C
	MR STAFF 2	WORK,KATHLEEN A
	MR STAFF 3	LUCAS,LEAH R
	MR TECHNICAL SPOKESPERSON	KHOSLA,ANUP K
	SENIOR STAFF WRITER	FUSARO,ROSEANNE R
	SPOKESPERSON	MC BURNETT,MARK ALAN
	TECHNICAL SUPPORT LIAISON	SCHINZEL,GLEN EUGENE
OSC	ASSISTANT OSC COORDINATOR	STEED,BROCK A
	CHEMISTRY DISCIPLINE LEADER	PALEN,JOHN D
	ELECTRICAL MAINTENANCE DISIPLINE LEAD	GRAHAM,TOMMY P
	ELECTRICAL MAINTENANCE PLANNER	ARP,DAVID JOEL
	I&C MAINTENANCE DISCIPLINE LEAD	CHILDERS,GARY NEILL
	I&C MAINTENANCE PLANNER	BARRON,PATRICK H
	MECHANICAL MAINTENANCE DISIPLINE LEAD	HARVEY JR,RALPH L
	MECHANICAL MAINTENANCE PLANNER	TILLER,MICHAEL EVINS
	OSC COMMUNICATOR	WAGNER,RODNEY K
	OSC COORDINATOR	WIENS,FRED L
	PLANT OPERATIONS DISCIPLINE LEAD	TIJERINA,NICOLAS
	RADIOLOGICAL COORDINATOR	MYERS,JUDY ANN
	RESOURCE COORDINATOR	SIMPSON-KOCUREK,EDNA EUDORA
	SECURITY COORDINATOR	BERNARD,ELINOR D
	STATUS BOARD KEEPER	EVERETT,VICTOR LEE
TSC	ADMIN STAFF 1	DYER,LINDA P
	ADMINSTRATIVE MANAGER	PETERS,GRANT L
	ASSISTANT OPERATIONS MANAGER	CALVERT,JAMES H
	ASSISTANT RAD MANAGER	KELTON,GRADY F
	ASSISTANT TSC MANAGER	HALPIN,EDWARD D
	CHEMICAL/RADIOCHEMICAL MANAGER	BRYANT,DANIEL JAMES
	ENGINEER - ELECTRICAL	RUVALCABA,MARCO A
	ENGINEER - I&C	JONES JR,GARY B
	ENGINEER - MECHANICAL	COOK,JOSEPH BERNARD
	ENGINEER - NUCLEAR	DUNN JR,ROLAND F
	ENGINEERING SUPERVISOR	BURACK,JOSEPH A
	MAINTENANCE COMMUNICATOR	BITTERLY,RICHARD D
	MAINTENANCE MANAGER	SIMONIS,VICTOR A
	OPERATIONS COMMUNICATOR	HODGES,JOHN HOUSTON
	OPERATIONS MANAGER	PETER,LOUIS WILLIAM
	RADIOLOGICAL MANAGER	AGUILERA,ROGER ALEX

5.2 Exercise Participants

FACILITY	POSITION	NAME
	SECURITY COMMUNICATOR	MORALES,PETE
	SECURITY MANAGER	WOODARD-HALL,MAUDESTER
	SECURITY SUPERVISOR	DURHAM JR,FRANK H
	STATUS BOARD KEEPER - RAD	MUSTON,PENNY R
	TECHNICAL MANAGER	KENT,ALEX P
	TSC COMMUNICATOR	KERR,ROBIN J
	TSC MANAGER	LOVELL,JOHN RUSSELL

6.0 EVALUATION MATERIAL

Evaluation materials contained in this section are divided by Emergency Response Facility.

CONTROL ROOM OBJECTIVE EVALUATION FORM

NAME: _____

1. Demonstrate the adequacy of the STPEGS Emergency Plan, and the Emergency Plan Implementing Procedures.

PERFORMANCE:

NOT APPLICABLE	[ ]	MINOR PROBLEMS	[ ]
NOT OBSERVED	[ ]	WEAKNESS	[ ]
STRONG	[ ]	NOT MET	[ ]
SATISFACTORY	[ ]		

SUPPORTING COMMENTS: _____

_____

_____

_____

_____

RECOMMENDATIONS: _____

_____

_____

_____

_____

CONTROL ROOM OBJECTIVE EVALUATION FORM

NAME: _____

2. Demonstrate the ability to activate, staff and operate the Technical Support Center (TSC), Operations Support Center (OSC), Emergency Operations Facility (EOF), and Joint Information Center (JIC) within the time frames specified in the Emergency Plan.

PERFORMANCE:

NOT APPLICABLE	[ ]	MINOR PROBLEMS	[ ]
NOT OBSERVED	[ ]	WEAKNESS	[ ]
STRONG	[ ]	NOT MET	[ ]
SATISFACTORY	[ ]		

SUPPORTING COMMENTS: _____

_____

_____

_____

_____

RECOMMENDATIONS: _____

_____

_____

_____

_____

CONTROL ROOM OBJECTIVE EVALUATION FORM

NAME: _____

3. Demonstrate the reliability and effective use of normal and emergency communications equipment and procedures.

PERFORMANCE:

NOT APPLICABLE	[ ]	MINOR PROBLEMS	[ ]
NOT OBSERVED	[ ]	WEAKNESS	[ ]
STRONG	[ ]	NOT MET	[ ]
SATISFACTORY	[ ]		

SUPPORTING COMMENTS: _____

_____

_____

_____

_____

RECOMMENDATIONS: _____

_____

_____

_____

_____

CONTROL ROOM OBJECTIVE EVALUATION FORM

NAME: _____

4. Demonstrate the ability to coordinate and effectively interface with State and NRC Protective Response Team representatives assigned to the onsite emergency facilities.

PERFORMANCE:

NOT APPLICABLE	[ ]	MINOR PROBLEMS	[ ]
NOT OBSERVED	[ ]	WEAKNESS	[ ]
STRONG	[ ]	NOT MET	[ ]
SATISFACTORY	[ ]		

SUPPORTING COMMENTS: _____

_____

_____

_____

_____

RECOMMENDATIONS: _____

_____

_____

_____

_____

CONTROL ROOM OBJECTIVE EVALUATION FORM

NAME: _____

5. Demonstrate the ability to provide an exercise scenario and controller organization that permits testing a major portion of the emergency plan.

PERFORMANCE:

NOT APPLICABLE	[ ]	MINOR PROBLEMS	[ ]
NOT OBSERVED	[ ]	WEAKNESS	[ ]
STRONG	[ ]	NOT MET	[ ]
SATISFACTORY	[ ]		

SUPPORTING COMMENTS: _____

_____

_____

_____

_____

RECOMMENDATIONS: _____

_____

_____

_____

_____

CONTROL ROOM OBJECTIVE EVALUATION FORM

NAME: _____

6. Demonstrate the ability to conduct a post-exercise critique to identify weak or deficient areas that need correction.

PERFORMANCE:

NOT APPLICABLE	[ ]	MINOR PROBLEMS	[ ]
NOT OBSERVED	[ ]	WEAKNESS	[ ]
STRONG	[ ]	NOT MET	[ ]
SATISFACTORY	[ ]		

SUPPORTING COMMENTS: _____

_____

_____

_____

_____

RECOMMENDATIONS: _____

_____

_____

_____

_____

CONTROL ROOM OBJECTIVE EVALUATION FORM

NAME: _____

7. Demonstrate the ability to assess plant conditions.

PERFORMANCE:

NOT APPLICABLE	[ ]	MINOR PROBLEMS	[ ]
NOT OBSERVED	[ ]	WEAKNESS	[ ]
STRONG	[ ]	NOT MET	[ ]
SATISFACTORY	[ ]		

SUPPORTING COMMENTS: _____

_____

_____

_____

_____

RECOMMENDATIONS: _____

_____

_____

_____

_____

CONTROL ROOM OBJECTIVE EVALUATION FORM

NAME: _____

8. Demonstrate the ability to identify projected trends and potential consequences.

PERFORMANCE:

NOT APPLICABLE	[ ]	MINOR PROBLEMS	[ ]
NOT OBSERVED	[ ]	WEAKNESS	[ ]
STRONG	[ ]	NOT MET	[ ]
SATISFACTORY	[ ]		

SUPPORTING COMMENTS: _____

_____

_____

_____

_____

RECOMMENDATIONS: _____

_____

_____

_____

_____

CONTROL ROOM OBJECTIVE EVALUATION FORM

NAME: _____

9. Demonstrate the ability to classify emergency events per the Classification Procedure 0ERP01-ZV-IN01 (Performance Indicator).

PERFORMANCE:

NOT APPLICABLE	[ ]	MINOR PROBLEMS	[ ]
NOT OBSERVED	[ ]	WEAKNESS	[ ]
STRONG	[ ]	NOT MET	[ ]
SATISFACTORY	[ ]		

SUPPORTING COMMENTS: _____

_____

_____

_____

_____

RECOMMENDATIONS: _____

_____

_____

_____

_____

CONTROL ROOM OBJECTIVE EVALUATION FORM

NAME: _____

11. Demonstrate the ability to alert and notify STPEGS emergency response personnel in a timely manner.

PERFORMANCE:

NOT APPLICABLE	[ ]	MINOR PROBLEMS	[ ]
NOT OBSERVED	[ ]	WEAKNESS	[ ]
STRONG	[ ]	NOT MET	[ ]
SATISFACTORY	[ ]		

SUPPORTING COMMENTS: _____

_____

_____

_____

_____

RECOMMENDATIONS: _____

_____

_____

_____

_____

CONTROL ROOM OBJECTIVE EVALUATION FORM

NAME: _____

12. Demonstrate the ability of STPEGS to notify federal, state and county agencies within the time frames specified in the Emergency Plan (Performance Indicator).

PERFORMANCE:

NOT APPLICABLE	[ ]	MINOR PROBLEMS	[ ]
NOT OBSERVED	[ ]	WEAKNESS	[ ]
STRONG	[ ]	NOT MET	[ ]
SATISFACTORY	[ ]		

SUPPORTING COMMENTS: _____

_____

_____

_____

_____

RECOMMENDATIONS: _____

_____

_____

_____

_____

CONTROL ROOM OBJECTIVE EVALUATION FORM

NAME: _____

13. Demonstrate the ability to correctly complete the Offsite Agency Notification Form. (Performance Indicator)

PERFORMANCE:

NOT APPLICABLE	[ ]	MINOR PROBLEMS	[ ]
NOT OBSERVED	[ ]	WEAKNESS	[ ]
STRONG	[ ]	NOT MET	[ ]
SATISFACTORY	[ ]		

SUPPORTING COMMENTS: _____

_____

_____

_____

_____

RECOMMENDATIONS: _____

_____

_____

_____

_____

CONTROL ROOM OBJECTIVE EVALUATION FORM

NAME: _____

14. Demonstrate the ability to alert, advise and direct onsite non-essential personnel.

PERFORMANCE:

NOT APPLICABLE	[ ]	MINOR PROBLEMS	[ ]
NOT OBSERVED	[ ]	WEAKNESS	[ ]
STRONG	[ ]	NOT MET	[ ]
SATISFACTORY	[ ]		

SUPPORTING COMMENTS: _____

_____

_____

_____

_____

RECOMMENDATIONS: _____

_____

_____

_____

_____

CONTROL ROOM OBJECTIVE EVALUATION FORM

NAME: _____

15. Demonstrate the ability to direct and coordinate emergency responses.

PERFORMANCE:

NOT APPLICABLE	[ ]	MINOR PROBLEMS	[ ]
NOT OBSERVED	[ ]	WEAKNESS	[ ]
STRONG	[ ]	NOT MET	[ ]
SATISFACTORY	[ ]		

SUPPORTING COMMENTS: _____

_____

_____

_____

_____

RECOMMENDATIONS: _____

_____

_____

_____

_____

CONTROL ROOM OBJECTIVE EVALUATION FORM

NAME: _____

16. Demonstrate the ability to transfer emergency direction from the Control Room (CR), to the TSC, and finally to the EOF, or from the Control Room directly to the EOF.

PERFORMANCE:

NOT APPLICABLE	[ ]	MINOR PROBLEMS	[ ]
NOT OBSERVED	[ ]	WEAKNESS	[ ]
STRONG	[ ]	NOT MET	[ ]
SATISFACTORY	[ ]		

SUPPORTING COMMENTS: _____

_____

_____

_____

_____

RECOMMENDATIONS: _____

_____

_____

_____

_____

CONTROL ROOM OBJECTIVE EVALUATION FORM

NAME: _____

18. Demonstrate the ability to provide onsite contamination controls, and area access controls.

PERFORMANCE:

NOT APPLICABLE	[ ]	MINOR PROBLEMS	[ ]
NOT OBSERVED	[ ]	WEAKNESS	[ ]
STRONG	[ ]	NOT MET	[ ]
SATISFACTORY	[ ]		

SUPPORTING COMMENTS: _____

_____

_____

_____

_____

RECOMMENDATIONS: _____

_____

_____

_____

_____

CONTROL ROOM OBJECTIVE EVALUATION FORM

NAME: _____

19. Demonstrate the ability to continuously monitor and control emergency worker exposures.

PERFORMANCE:

NOT APPLICABLE	[ ]	MINOR PROBLEMS	[ ]
NOT OBSERVED	[ ]	WEAKNESS	[ ]
STRONG	[ ]	NOT MET	[ ]
SATISFACTORY	[ ]		

SUPPORTING COMMENTS: _____

_____

_____

_____

_____

RECOMMENDATIONS: _____

_____

_____

_____

_____

CONTROL ROOM OBJECTIVE EVALUATION FORM

NAME: _____

24. Demonstrate the ability to determine source terms and dose projections, evaluate dose projections against protective action guides and determine appropriate onsite and offsite protective actions.

PERFORMANCE:

NOT APPLICABLE	[ ]	MINOR PROBLEMS	[ ]
NOT OBSERVED	[ ]	WEAKNESS	[ ]
STRONG	[ ]	NOT MET	[ ]
SATISFACTORY	[ ]		

SUPPORTING COMMENTS: _____

_____

_____

_____

_____

RECOMMENDATIONS: _____

_____

_____

_____

CONTROL ROOM OBJECTIVE EVALUATION FORM

NAME: _____

25. Demonstrate the ability to make timely protective action recommendations to offsite agencies (Performance Indicator).

PERFORMANCE:

NOT APPLICABLE	[ ]	MINOR PROBLEMS	[ ]
NOT OBSERVED	[ ]	WEAKNESS	[ ]
STRONG	[ ]	NOT MET	[ ]
SATISFACTORY	[ ]		

SUPPORTING COMMENTS: _____

_____

_____

_____

_____

RECOMMENDATIONS: _____

_____

_____

_____

CONTROL ROOM OBJECTIVE EVALUATION FORM

NAME: _____

32. Demonstrate the ability to control access to the Owner Controlled Area, the Protected Area and the Emergency Response Facilities.

PERFORMANCE:

NOT APPLICABLE	[ ]	MINOR PROBLEMS	[ ]
NOT OBSERVED	[ ]	WEAKNESS	[ ]
STRONG	[ ]	NOT MET	[ ]
SATISFACTORY	[ ]		

SUPPORTING COMMENTS: _____

_____

_____

_____

_____

RECOMMENDATIONS: _____

_____

_____

_____

TECHNICAL SUPPORT CENTER OBJECTIVE EVALUATION FORM

NAME: _____

1. Demonstrate the adequacy of the STPEGS Emergency Plan, and the Emergency Plan Implementing Procedures.

PERFORMANCE:

NOT APPLICABLE	[ ]	MINOR PROBLEMS	[ ]
NOT OBSERVED	[ ]	WEAKNESS	[ ]
STRONG	[ ]	NOT MET	[ ]
SATISFACTORY	[ ]		

SUPPORTING COMMENTS: _____

_____

_____

_____

_____

RECOMMENDATIONS:

_____

_____

_____

_____

_____

TECHNICAL SUPPORT CENTER OBJECTIVE EVALUATION FORM

NAME: _____

2. Demonstrate the ability to activate, staff and operate the Technical Support Center (TSC), Operations Support Center (OSC), Emergency Operations Facility (EOF), and Joint Information Center (JIC) within the time frames specified in the Emergency Plan.

PERFORMANCE:

NOT APPLICABLE	[ ]	MINOR PROBLEMS	[ ]
NOT OBSERVED	[ ]	WEAKNESS	[ ]
STRONG	[ ]	NOT MET	[ ]
SATISFACTORY	[ ]		

SUPPORTING COMMENTS: _____

_____

_____

_____

_____

RECOMMENDATIONS: _____

_____

_____

_____

_____

TECHNICAL SUPPORT CENTER OBJECTIVE EVALUATION FORM

NAME: _____

3. Demonstrate the reliability and effective use of normal and emergency communications equipment and procedures.

PERFORMANCE:

NOT APPLICABLE	[ ]	MINOR PROBLEMS	[ ]
NOT OBSERVED	[ ]	WEAKNESS	[ ]
STRONG	[ ]	NOT MET	[ ]
SATISFACTORY	[ ]		

SUPPORTING COMMENTS: _____

_____

_____

_____

_____

RECOMMENDATIONS: _____

_____

_____

_____

_____

TECHNICAL SUPPORT CENTER OBJECTIVE EVALUATION FORM

NAME: _____

4. Demonstrate the ability to coordinate and effectively interface with State and NRC Protective Response Team representatives assigned to the onsite emergency facilities.

PERFORMANCE:

NOT APPLICABLE	[ ]	MINOR PROBLEMS	[ ]
NOT OBSERVED	[ ]	WEAKNESS	[ ]
STRONG	[ ]	NOT MET	[ ]
SATISFACTORY	[ ]		

SUPPORTING COMMENTS: _____

_____

_____

_____

_____

RECOMMENDATIONS: _____

_____

_____

_____

_____

TECHNICAL SUPPORT CENTER OBJECTIVE EVALUATION FORM

NAME: _____

5. Demonstrate the ability to provide an exercise scenario and controller organization that permits testing a major portion of the emergency plan.

PERFORMANCE:

NOT APPLICABLE	[ ]	MINOR PROBLEMS	[ ]
NOT OBSERVED	[ ]	WEAKNESS	[ ]
STRONG	[ ]	NOT MET	[ ]
SATISFACTORY	[ ]		

SUPPORTING COMMENTS: _____

_____

_____

_____

_____

RECOMMENDATIONS: _____

_____

_____

_____

_____

TECHNICAL SUPPORT CENTER OBJECTIVE EVALUATION FORM

NAME: _____

6. Demonstrate the ability to conduct a post-exercise critique to identify weak or deficient areas that need correction.

PERFORMANCE:

NOT APPLICABLE	[ ]	MINOR PROBLEMS	[ ]
NOT OBSERVED	[ ]	WEAKNESS	[ ]
STRONG	[ ]	NOT MET	[ ]
SATISFACTORY	[ ]		

SUPPORTING COMMENTS: _____

_____

_____

_____

_____

RECOMMENDATIONS: _____

_____

_____

_____

_____

TECHNICAL SUPPORT CENTER OBJECTIVE EVALUATION FORM

NAME: _____

7. Demonstrate the ability to assess plant conditions.

PERFORMANCE:

NOT APPLICABLE	[ ]	MINOR PROBLEMS	[ ]
NOT OBSERVED	[ ]	WEAKNESS	[ ]
STRONG	[ ]	NOT MET	[ ]
SATISFACTORY	[ ]		

SUPPORTING COMMENTS: _____

_____

_____

_____

_____

RECOMMENDATIONS: _____

_____

_____

_____

_____

TECHNICAL SUPPORT CENTER OBJECTIVE EVALUATION FORM

NAME: _____

8. Demonstrate the ability to identify projected trends and potential consequences.

PERFORMANCE:

NOT APPLICABLE	[ ]	MINOR PROBLEMS	[ ]
NOT OBSERVED	[ ]	WEAKNESS	[ ]
STRONG	[ ]	NOT MET	[ ]
SATISFACTORY	[ ]		

SUPPORTING COMMENTS: _____

_____

_____

_____

_____

RECOMMENDATIONS: _____

_____

_____

_____

_____

TECHNICAL SUPPORT CENTER OBJECTIVE EVALUATION FORM

NAME: _____

9. Demonstrate the ability to classify emergency events per the Classification Procedure 0ERP01-ZV-IN01 (Performance Indicator).

PERFORMANCE:

NOT APPLICABLE	[ ]	MINOR PROBLEMS	[ ]
NOT OBSERVED	[ ]	WEAKNESS	[ ]
STRONG	[ ]	NOT MET	[ ]
SATISFACTORY	[ ]		

SUPPORTING COMMENTS: _____

_____

_____

_____

_____

RECOMMENDATIONS: _____

_____

_____

_____

_____

TECHNICAL SUPPORT CENTER OBJECTIVE EVALUATION FORM

NAME: _____

10. Demonstrate the ability to provide technical support for operations in accident assessment and mitigation.

PERFORMANCE:

NOT APPLICABLE	[ ]	MINOR PROBLEMS	[ ]
NOT OBSERVED	[ ]	WEAKNESS	[ ]
STRONG	[ ]	NOT MET	[ ]
SATISFACTORY	[ ]		

SUPPORTING COMMENTS: _____

_____

_____

_____

_____

RECOMMENDATIONS: _____

_____

_____

_____

_____

TECHNICAL SUPPORT CENTER OBJECTIVE EVALUATION FORM

NAME: _____

11. Demonstrate the ability to alert and notify STPEGS emergency response personnel in a timely manner.

PERFORMANCE:

NOT APPLICABLE	[ ]	MINOR PROBLEMS	[ ]
NOT OBSERVED	[ ]	WEAKNESS	[ ]
STRONG	[ ]	NOT MET	[ ]
SATISFACTORY	[ ]		

SUPPORTING COMMENTS: _____

_____

_____

_____

_____

RECOMMENDATIONS: _____

_____

_____

_____

_____

TECHNICAL SUPPORT CENTER OBJECTIVE EVALUATION FORM

NAME: _____

12. Demonstrate the ability of STPEGS to notify federal, state and county agencies within the time frames specified in the Emergency Plan (Performance Indicator).

PERFORMANCE:

NOT APPLICABLE	[ ]	MINOR PROBLEMS	[ ]
NOT OBSERVED	[ ]	WEAKNESS	[ ]
STRONG	[ ]	NOT MET	[ ]
SATISFACTORY	[ ]		

SUPPORTING COMMENTS: _____

_____

_____

_____

_____

RECOMMENDATIONS: _____

_____

_____

_____

_____

TECHNICAL SUPPORT CENTER OBJECTIVE EVALUATION FORM

NAME: _____

13. Demonstrate the ability to correctly complete the Offsite Agency Notification Form. (Performance Indicator)

PERFORMANCE:

NOT APPLICABLE	[ ]	MINOR PROBLEMS	[ ]
NOT OBSERVED	[ ]	WEAKNESS	[ ]
STRONG	[ ]	NOT MET	[ ]
SATISFACTORY	[ ]		

SUPPORTING COMMENTS: _____

_____

_____

_____

_____

RECOMMENDATIONS: _____

_____

_____

_____

_____

TECHNICAL SUPPORT CENTER OBJECTIVE EVALUATION FORM

NAME: _____

14. Demonstrate the ability to alert, advise and direct onsite non-essential personnel.

PERFORMANCE:

NOT APPLICABLE	[ ]	MINOR PROBLEMS	[ ]
NOT OBSERVED	[ ]	WEAKNESS	[ ]
STRONG	[ ]	NOT MET	[ ]
SATISFACTORY	[ ]		

SUPPORTING COMMENTS: _____

_____

_____

_____

_____

RECOMMENDATIONS: _____

_____

_____

_____

_____

TECHNICAL SUPPORT CENTER OBJECTIVE EVALUATION FORM

NAME: _____

15. Demonstrate the ability to direct and coordinate emergency responses.

PERFORMANCE:

NOT APPLICABLE	[ ]	MINOR PROBLEMS	[ ]
NOT OBSERVED	[ ]	WEAKNESS	[ ]
STRONG	[ ]	NOT MET	[ ]
SATISFACTORY	[ ]		

SUPPORTING COMMENTS: _____

_____

_____

_____

_____

RECOMMENDATIONS: _____

_____

_____

_____

_____

TECHNICAL SUPPORT CENTER EVALUATION FORM

NAME: _____

16. Demonstrate the ability to transfer emergency direction from the Control Room (CR), to the TSC, and finally to the EOF, or from the Control Room directly to the EOF.

PERFORMANCE:

NOT APPLICABLE	[ ]	MINOR PROBLEMS	[ ]
NOT OBSERVED	[ ]	WEAKNESS	[ ]
STRONG	[ ]	NOT MET	[ ]
SATISFACTORY	[ ]		

SUPPORTING COMMENTS: _____

_____

_____

_____

_____

RECOMMENDATIONS: _____

_____

_____

_____

_____

TECHNICAL SUPPORT CENTER OBJECTIVE EVALUATION FORM

NAME: _____

18. Demonstrate the ability to provide onsite contamination controls, and area access controls.

PERFORMANCE:

NOT APPLICABLE	[ ]	MINOR PROBLEMS	[ ]
NOT OBSERVED	[ ]	WEAKNESS	[ ]
STRONG	[ ]	NOT MET	[ ]
SATISFACTORY	[ ]		

SUPPORTING COMMENTS: _____

_____

_____

_____

_____

RECOMMENDATIONS: _____

_____

_____

_____

_____

TECHNICAL SUPPORT CENTER OBJECTIVE EVALUATION FORM

NAME: _____

19. Demonstrate the ability to continuously monitor and control emergency worker exposures.

PERFORMANCE:

NOT APPLICABLE	[ ]	MINOR PROBLEMS	[ ]
NOT OBSERVED	[ ]	WEAKNESS	[ ]
STRONG	[ ]	NOT MET	[ ]
SATISFACTORY	[ ]		

SUPPORTING COMMENTS: _____

_____

_____

_____

_____

RECOMMENDATIONS: _____

_____

_____

_____

_____

TECHNICAL SUPPORT CENTER OBJECTIVE EVALUATION FORM

NAME: _____

20. Demonstrate the ability to monitor, assess, and correlate onsite radiological conditions.

PERFORMANCE:

NOT APPLICABLE	[ ]	MINOR PROBLEMS	[ ]
NOT OBSERVED	[ ]	WEAKNESS	[ ]
STRONG	[ ]	NOT MET	[ ]
SATISFACTORY	[ ]		

SUPPORTING COMMENTS: _____

_____

_____

_____

_____

RECOMMENDATIONS: _____

_____

_____

_____

_____

TECHNICAL SUPPORT CENTER OBJECTIVE EVALUATION FORM

NAME: _____

22. Demonstrate the ability to assess core damage.

PERFORMANCE:

NOT APPLICABLE	[ ]	MINOR PROBLEMS	[ ]
NOT OBSERVED	[ ]	WEAKNESS	[ ]
STRONG	[ ]	NOT MET	[ ]
SATISFACTORY	[ ]		

SUPPORTING COMMENTS: _____

_____

_____

_____

_____

RECOMMENDATIONS: _____

_____

_____

_____

_____

TECHNICAL SUPPORT CENTER OBJECTIVE EVALUATION FORM

NAME: _____

24. Demonstrate the ability to determine source terms and dose projections, evaluate dose projections against protective action guides and determine appropriate onsite and offsite protective actions.

PERFORMANCE:

NOT APPLICABLE	[ ]	MINOR PROBLEMS	[ ]
NOT OBSERVED	[ ]	WEAKNESS	[ ]
STRONG	[ ]	NOT MET	[ ]
SATISFACTORY	[ ]		

SUPPORTING COMMENTS: _____

_____

_____

_____

_____

RECOMMENDATIONS: _____

_____

_____

_____

TECHNICAL SUPPORT CENTER OBJECTIVE EVALUATION FORM

NAME: _____

25. Demonstrate the ability to make timely protective action recommendations to offsite agencies (Performance Indicator).

PERFORMANCE:

NOT APPLICABLE	[ ]	MINOR PROBLEMS	[ ]
NOT OBSERVED	[ ]	WEAKNESS	[ ]
STRONG	[ ]	NOT MET	[ ]
SATISFACTORY	[ ]		

SUPPORTING COMMENTS: _____

_____

_____

_____

_____

RECOMMENDATIONS: _____

_____

_____

_____

TECHNICAL SUPPORT CENTER OBJECTIVE EVALUATION FORM

NAME: _____

27. Demonstrate the capability to coordinate the preparation, review and release of information with state and local government agencies, and provide press releases to the media in a timely manner.

PERFORMANCE:

NOT APPLICABLE	[ ]	MINOR PROBLEMS	[ ]
NOT OBSERVED	[ ]	WEAKNESS	[ ]
STRONG	[ ]	NOT MET	[ ]
SATISFACTORY	[ ]		

SUPPORTING COMMENTS: _____

_____

_____

_____

_____

RECOMMENDATIONS: _____

_____

_____

_____

TECHNICAL SUPPORT CENTER OBJECTIVE EVALUATION FORM

NAME: _____

32. Demonstrate the ability to provide initial and continuous accountability of onsite personnel.

PERFORMANCE:

NOT APPLICABLE	[ ]	MINOR PROBLEMS	[ ]
NOT OBSERVED	[ ]	WEAKNESS	[ ]
STRONG	[ ]	NOT MET	[ ]
SATISFACTORY	[ ]		

SUPPORTING COMMENTS: _____

_____

_____

_____

_____

RECOMMENDATIONS: _____

_____

_____

_____

TECHNICAL SUPPORT CENTER OBJECTIVE EVALUATION FORM

NAME: _____

33. Demonstrate the ability to conduct a post-accident recovery and re-entry seminar with federal, state and local officials.

PERFORMANCE:

NOT APPLICABLE	[ ]	MINOR PROBLEMS	[ ]
NOT OBSERVED	[ ]	WEAKNESS	[ ]
STRONG	[ ]	NOT MET	[ ]
SATISFACTORY	[ ]		

SUPPORTING COMMENTS: _____

_____

_____

_____

_____

RECOMMENDATIONS: _____

_____

_____

_____

OPERATIONS SUPPORT CENTER OBJECTIVE EVALUATION FORM

NAME: _____

1. Demonstrate the adequacy of the STPEGS Emergency Plan, and the Emergency Plan Implementing Procedures.

PERFORMANCE:

NOT APPLICABLE	[ ]	MINOR PROBLEMS	[ ]
NOT OBSERVED	[ ]	WEAKNESS	[ ]
STRONG	[ ]	NOT MET	[ ]
SATISFACTORY	[ ]		

SUPPORTING COMMENTS: _____

_____

_____

_____

_____

RECOMMENDATIONS: _____

_____

_____

_____

_____

OPERATIONS SUPPORT CENTER OBJECTIVE EVALUATION FORM

NAME: _____

2. Demonstrate the ability to activate, staff and operate the Technical Support Center (TSC), Operations Support Center (OSC), Emergency Operations Facility (EOF), and Joint Information Center (JIC) within the time frames specified in the Emergency Plan.

PERFORMANCE:

NOT APPLICABLE	[ ]	MINOR PROBLEMS	[ ]
NOT OBSERVED	[ ]	WEAKNESS	[ ]
STRONG	[ ]	NOT MET	[ ]
SATISFACTORY	[ ]		

SUPPORTING COMMENTS: _____

_____

_____

_____

_____

RECOMMENDATIONS: _____

_____

_____

_____

_____

OPERATIONS SUPPORT CENTER OBJECTIVE EVALUATION FORM

NAME: _____

3. Demonstrate the reliability and effective use of normal and emergency communications equipment and procedures.

PERFORMANCE:

NOT APPLICABLE	[ ]	MINOR PROBLEMS	[ ]
NOT OBSERVED	[ ]	WEAKNESS	[ ]
STRONG	[ ]	NOT MET	[ ]
SATISFACTORY	[ ]		

SUPPORTING COMMENTS: _____

_____

_____

_____

_____

RECOMMENDATIONS: _____

_____

_____

_____

_____

OPERATIONS SUPPORT CENTER OBJECTIVE EVALUATION FORM

NAME: _____

5. Demonstrate the ability to provide an exercise scenario and controller organization that permits testing a major portion of the emergency plan.

PERFORMANCE:

NOT APPLICABLE	[ ]	MINOR PROBLEMS	[ ]
NOT OBSERVED	[ ]	WEAKNESS	[ ]
STRONG	[ ]	NOT MET	[ ]
SATISFACTORY	[ ]		

SUPPORTING COMMENTS: _____

_____

_____

_____

_____

RECOMMENDATIONS: _____

_____

_____

_____

_____

OPERATIONS SUPPORT CENTER OBJECTIVE EVALUATION FORM

NAME: _____

6. Demonstrate the ability to conduct a post-exercise critique to identify weak or deficient areas that need correction.

PERFORMANCE:

NOT APPLICABLE	[ ]	MINOR PROBLEMS	[ ]
NOT OBSERVED	[ ]	WEAKNESS	[ ]
STRONG	[ ]	NOT MET	[ ]
SATISFACTORY	[ ]		

SUPPORTING COMMENTS: _____

_____

_____

_____

_____

RECOMMENDATIONS: _____

_____

_____

_____

_____

OPERATIONS SUPPORT CENTER OBJECTIVE EVALUATION FORM

NAME: _____

8. Demonstrate the ability to identify projected trends and potential consequences.

PERFORMANCE:

NOT APPLICABLE	[ ]	MINOR PROBLEMS	[ ]
NOT OBSERVED	[ ]	WEAKNESS	[ ]
STRONG	[ ]	NOT MET	[ ]
SATISFACTORY	[ ]		

SUPPORTING COMMENTS: _____

_____

_____

_____

_____

RECOMMENDATIONS: _____

_____

_____

_____

_____

OPERATIONS SUPPORT CENTER OBJECTIVE EVALUATION FORM

NAME: _____

15. Demonstrate the ability to direct and coordinate emergency responses.

PERFORMANCE:

NOT APPLICABLE	[ ]	MINOR PROBLEMS	[ ]
NOT OBSERVED	[ ]	WEAKNESS	[ ]
STRONG	[ ]	NOT MET	[ ]
SATISFACTORY	[ ]		

SUPPORTING COMMENTS: _____

_____

_____

_____

_____

RECOMMENDATIONS: _____

_____

_____

_____

_____

OPERATIONS SUPPORT CENTER OBJECTIVE EVALUATION FORM

NAME: _____

17. Demonstrate the ability to provide radiological monitoring and decontamination capabilities for onsite and non-essential personnel.

PERFORMANCE:

NOT APPLICABLE	[ ]	MINOR PROBLEMS	[ ]
NOT OBSERVED	[ ]	WEAKNESS	[ ]
STRONG	[ ]	NOT MET	[ ]
SATISFACTORY	[ ]		

SUPPORTING COMMENTS: _____

_____

_____

_____

_____

RECOMMENDATIONS: _____

_____

_____

_____

_____

OPERATIONS SUPPORT CENTER OBJECTIVE EVALUATION FORM

NAME: _____

18. Demonstrate the ability to provide onsite contamination controls, and area access controls.

PERFORMANCE:

NOT APPLICABLE	[ ]	MINOR PROBLEMS	[ ]
NOT OBSERVED	[ ]	WEAKNESS	[ ]
STRONG	[ ]	NOT MET	[ ]
SATISFACTORY	[ ]		

SUPPORTING COMMENTS: _____

_____

_____

_____

_____

RECOMMENDATIONS: _____

_____

_____

_____

_____

OPERATIONS SUPPORT CENTER OBJECTIVE EVALUATION FORM

NAME: _____

19. Demonstrate the ability to continuously monitor and control emergency worker exposures.

PERFORMANCE:

NOT APPLICABLE	[ ]	MINOR PROBLEMS	[ ]
NOT OBSERVED	[ ]	WEAKNESS	[ ]
STRONG	[ ]	NOT MET	[ ]
SATISFACTORY	[ ]		

SUPPORTING COMMENTS: _____

_____

_____

_____

_____

RECOMMENDATIONS: _____

_____

_____

_____

_____

OPERATIONS SUPPORT CENTER OBJECTIVE EVALUATION FORM

NAME: _____

20. Demonstrate the ability to monitor, assess, and correlate onsite radiological conditions.

PERFORMANCE:

NOT APPLICABLE	[ ]	MINOR PROBLEMS	[ ]
NOT OBSERVED	[ ]	WEAKNESS	[ ]
STRONG	[ ]	NOT MET	[ ]
SATISFACTORY	[ ]		

SUPPORTING COMMENTS: _____

_____

_____

_____

_____

RECOMMENDATIONS: _____

_____

_____

_____

_____

OPERATIONS SUPPORT CENTER OBJECTIVE EVALUATION FORM

NAME: _____

21. Demonstrate the ability to collect, analyze and evaluate simulated radiological samples and surveys.

PERFORMANCE:

NOT APPLICABLE	[ ]	MINOR PROBLEMS	[ ]
NOT OBSERVED	[ ]	WEAKNESS	[ ]
STRONG	[ ]	NOT MET	[ ]
SATISFACTORY	[ ]		

SUPPORTING COMMENTS: _____

_____

_____

_____

_____

RECOMMENDATIONS: _____

_____

_____

_____

_____

OPERATIONS SUPPORT CENTER OBJECTIVE EVALUATION FORM

NAME: _____

23. Demonstrate the ability to simulate taking a PASS sample.

PERFORMANCE:

NOT APPLICABLE	[ ]	MINOR PROBLEMS	[ ]
NOT OBSERVED	[ ]	WEAKNESS	[ ]
STRONG	[ ]	NOT MET	[ ]
SATISFACTORY	[ ]		

SUPPORTING COMMENTS: _____

_____

_____

_____

_____

RECOMMENDATIONS: _____

_____

_____

_____

_____

OPERATIONS SUPPORT CENTER OBJECTIVE EVALUATION FORM

NAME: _____

26. Demonstrate the ability to adequately form, brief, dispatch, and debrief Emergency Teams.

PERFORMANCE:

NOT APPLICABLE [ ]
NOT OBSERVED [ ]
STRONG [ ]
SATISFACTORY [ ]
MINOR PROBLEMS [ ]
WEAKNESS [ ]
NOT MET [ ]

SUPPORTING COMMENTS: _____

_____

_____

_____

_____

RECOMMENDATIONS: _____

_____

_____

_____

OPERATIONS SUPPORT CENTER OBJECTIVE EVALUATION FORM

NAME: _____

32. Demonstrate the ability to control access to the Owner Controlled Area, the Protected Area and the Emergency Response Facilities.

PERFORMANCE:

NOT APPLICABLE	[ ]	MINOR PROBLEMS	[ ]
NOT OBSERVED	[ ]	WEAKNESS	[ ]
STRONG	[ ]	NOT MET	[ ]
SATISFACTORY	[ ]		

SUPPORTING COMMENTS: _____

_____

_____

_____

_____

RECOMMENDATIONS: _____

_____

_____

_____

EVALUATION CHECKLIST
Onsite Radiological Monitoring Team

	Team Assigned _____	Yes	No	Not Observed
1.	Did the team respond to, and prepare for, survey tasks in a timely manner?	____	____	____
2.	Did the team have the proper equipment?	____	____	____
	a. Dosimetry	____	____	____
	b. Survey instruments	____	____	____
	c. Maps	____	____	____
	d. Protective clothing/respiratory protection equipment	____	____	____
	e. Radio	____	____	____
	f. Vehicle (if needed)	____	____	____
	g. Sampling equipment	____	____	____
3.	Prior to deployment, was the team adequately briefed regarding potential hazards and conditions?	____	____	____
4.	Prior to deployment, was a team leader identified?	____	____	____
5.	Were the survey instruments functionally checked prior to starting on the survey and were the instrument calibrations current?	____	____	____
6.	Was personnel dosimetry available and issued to the team members?	____	____	____
7.	Were teams supplied with appropriate high-range personnel dosimeters?	____	____	____
8.	Were procedures followed while taking samples?	____	____	____
9.	Were appropriate precautions taken in the samples?	____	____	____
10.	Were radiological monitoring procedures available to, and used by, team personnel?	____	____	____

EVALUATION CHECKLIST
Onsite Radiological Monitoring Team

Team Assigned _____	Yes	No	Not Observed
11. Was respiratory protection equipment available.	____	____	____
12. Were communications properly maintained?	____	____	____
13. Upon return, was the team properly debriefed?	____	____	____

EVALUATION CHECKLIST
PASS Team

Team Assigned _____

		Yes	No	Not Observed
1.	Prior to deployment, was the team given an adequate briefing on the potential or actual radiation hazards and contamination problems?	____	____	____
2.	Was a predetermined route established prior to departure and then used by the team?	____	____	____
3.	Was health physics coverage provided for sampling retrieval assistance where potential or actual radiation hazards existed?	____	____	____
4.	Were the team members familiar with routine and/or post-accident sample retrieval procedures/practices?	____	____	____
5.	Did the team use good sample retrieval practices (e.g., the use of dosimetry or the conduct of surveys)?	____	____	____
6.	Were the team members familiar with equipment operation?	____	____	____
7.	Were communications properly maintained throughout the sampling process?	____	____	____
8.	Were the protective clothing and respiratory protection requirements adequate?	____	____	____
9.	Were the sampling and analysis procedures sufficient to provide acceptable and accurate results?	____	____	____
10.	Did the laboratory technicians observe good laboratory practices (e.g. hot sample)?	____	____	____

EVALUATION CHECKLIST
Onsite Emergency Team

Team Assigned _____

		Yes	No	Not Observed
1.	Prior to deployment, was the team given an adequate briefing on the job to be performed, the potential or actual radiation hazards, and contaminations problems?	____	____	____
2.	Did the team have the appropriate tools and equipment for the job?	____	____	____
3.	Was a predetermined route to the work area established prior to departure and then used by the team?	____	____	____
4.	Was a team leader identified prior to deployment?	____	____	____
5.	Were appropriate operational checks completed on the equipment?	____	____	____
6.	Was health physics coverage provided for those work activities where potential or actual radiation hazards existed?	____	____	____
7.	Were the team members familiar with the job they were to perform and work procedures/practices they were to employ?	____	____	____
8.	Did the team utilize health physics practices, such as:			
	a. Contamination control?	____	____	____
	b. Conducting surveys enroute to, and at, the work area?	____	____	____
	c. Frequent reading of dosimeters?	____	____	____
	d. Frisking (when applicable)?	____	____	____
9.	Were the team members familiar with equipment and tools to be used?	____	____	____
10.	Were communications properly maintained throughout the work activity?	____	____	____

EVALUATION CHECKLIST
Onsite Emergency Team (Con't)

Team Assigned _____	Yes	No	Not Observed
11. Were the protective clothing and respiratory protection requirements adequate?	____	____	____
12. Was the team able to complete its assigned work activity?	____	____	____
13. Was the team properly debriefed upon its return?	____	____	____

EVALUATION CHECKLIST
Medical Response Team

Team Assigned _____	Yes	No	Not Observed
1. Did the team have the appropriate equipment for the job?	____	____	____
2. Was a predetermined route established prior to departure and then used by the team?	____	____	____
3. Was a team leader identified prior to deployment?	____	____	____
4. Were the team members familiar with proper response procedures/practices?	____	____	____
5. Did the team utilize health physics practices, such as:			
a. Contamination control?	____	____	____
b. Conducting surveys enroute to, and at the scene?	____	____	____
c. Frequent reading of dosimeters?	____	____	____
d. Frisking (when applicable)?	____	____	____
6. Were the team members familiar with equipment used?	____	____	____
7. Were communications properly maintained throughout the activity?	____	____	____
8. Were the protective clothing and respiratory protection requirements adequate?	____	____	____

EMERGENCY OPERATIONS FACILITY OBJECTIVE EVALUATION FORM

NAME: _____

1. Demonstrate the adequacy of the STPEGS Emergency Plan, and the Emergency Plan Implementing Procedures.

PERFORMANCE:

NOT APPLICABLE	[ ]	MINOR PROBLEMS	[ ]
NOT OBSERVED	[ ]	WEAKNESS	[ ]
STRONG	[ ]	NOT MET	[ ]
SATISFACTORY	[ ]		

SUPPORTING COMMENTS: _____

_____

_____

_____

_____

RECOMMENDATIONS: _____

_____

_____

_____

_____

EMERGENCY OPERATIONS FACILITY OBJECTIVE EVALUATION FORM

NAME: _____

2. Demonstrate the ability to activate, staff and operate the Technical Support Center (TSC), Operations Support Center (OSC), Emergency Operations Facility (EOF), and Joint Information Center (JIC) within the time frames specified in the Emergency Plan.

PERFORMANCE:

NOT APPLICABLE	[ ]	MINOR PROBLEMS	[ ]
NOT OBSERVED	[ ]	WEAKNESS	[ ]
STRONG	[ ]	NOT MET	[ ]
SATISFACTORY	[ ]		

SUPPORTING COMMENTS: _____

_____

_____

_____

_____

RECOMMENDATIONS: _____

_____

_____

_____

_____

EMERGENCY OPERATIONS FACILITY OBJECTIVE EVALUATION FORM

NAME: _____

3. Demonstrate the reliability and effective use of normal and emergency communications equipment and procedures.

PERFORMANCE:

NOT APPLICABLE	[ ]	MINOR PROBLEMS	[ ]
NOT OBSERVED	[ ]	WEAKNESS	[ ]
STRONG	[ ]	NOT MET	[ ]
SATISFACTORY	[ ]		

SUPPORTING COMMENTS: _____

_____

_____

_____

_____

RECOMMENDATIONS: _____

_____

_____

_____

_____

EMERGENCY OPERATIONS FACILITY OBJECTIVE EVALUATION FORM

NAME: _____

4. Demonstrate the ability to coordinate and effectively interface with State and NRC Protective Response Team representatives assigned to the onsite emergency facilities.

PERFORMANCE:

NOT APPLICABLE	[ ]	MINOR PROBLEMS	[ ]
NOT OBSERVED	[ ]	WEAKNESS	[ ]
STRONG	[ ]	NOT MET	[ ]
SATISFACTORY	[ ]		

SUPPORTING COMMENTS: _____

_____

_____

_____

_____

RECOMMENDATIONS: _____

_____

_____

_____

_____

EMERGENCY OPERATIONS FACILITY OBJECTIVE EVALUATION FORM

NAME: _____

5. Demonstrate the ability to provide an exercise scenario and controller organization that permits testing a major portion of the emergency plan.

PERFORMANCE:

NOT APPLICABLE	[ ]	MINOR PROBLEMS	[ ]
NOT OBSERVED	[ ]	WEAKNESS	[ ]
STRONG	[ ]	NOT MET	[ ]
SATISFACTORY	[ ]		

SUPPORTING COMMENTS: _____

_____

_____

_____

_____

RECOMMENDATIONS: _____

_____

_____

_____

_____

EMERGENCY OPERATIONS FACILITY OBJECTIVE EVALUATION FORM

NAME: _____

6. Demonstrate the ability to conduct a post-exercise critique to identify weak or deficient areas that need correction.

PERFORMANCE:

NOT APPLICABLE	[ ]	MINOR PROBLEMS	[ ]
NOT OBSERVED	[ ]	WEAKNESS	[ ]
STRONG	[ ]	NOT MET	[ ]
SATISFACTORY	[ ]		

SUPPORTING COMMENTS: _____

_____

_____

_____

_____

RECOMMENDATIONS: _____

_____

_____

_____

_____

EMERGENCY OPERATIONS FACILITY OBJECTIVE EVALUATION FORM

NAME: _____

7. Demonstrate the ability to assess plant conditions.

PERFORMANCE:

NOT APPLICABLE	[ ]	MINOR PROBLEMS	[ ]
NOT OBSERVED	[ ]	WEAKNESS	[ ]
STRONG	[ ]	NOT MET	[ ]
SATISFACTORY	[ ]		

SUPPORTING COMMENTS: _____

_____

_____

_____

_____

RECOMMENDATIONS: _____

_____

_____

_____

_____

EMERGENCY OPERATIONS FACILITY OBJECTIVE EVALUATION FORM

NAME: _____

8. Demonstrate the ability to identify projected trends and potential consequences.

PERFORMANCE:

NOT APPLICABLE	[ ]	MINOR PROBLEMS	[ ]
NOT OBSERVED	[ ]	WEAKNESS	[ ]
STRONG	[ ]	NOT MET	[ ]
SATISFACTORY	[ ]		

SUPPORTING COMMENTS: _____

_____

_____

_____

_____

RECOMMENDATIONS: _____

_____

_____

_____

_____

EMERGENCY OPERATIONS FACILITY OBJECTIVE EVALUATION FORM

NAME: _____

9. Demonstrate the ability to classify emergency events per the Classification Procedure 0ERP01-ZV-IN01 (Performance Indicator).

PERFORMANCE:

NOT APPLICABLE	[ ]	MINOR PROBLEMS	[ ]
NOT OBSERVED	[ ]	WEAKNESS	[ ]
STRONG	[ ]	NOT MET	[ ]
SATISFACTORY	[ ]		

SUPPORTING COMMENTS: _____

_____

_____

_____

_____

RECOMMENDATIONS: _____

_____

_____

_____

_____

EMERGENCY OPERATIONS FACILITY OBJECTIVE EVALUATION FORM

NAME: _____

12. Demonstrate the ability of STPEGS to notify federal, state and county agencies within the time frames specified in the Emergency Plan (Performance Indicator).

PERFORMANCE:

NOT APPLICABLE	[ ]	MINOR PROBLEMS	[ ]
NOT OBSERVED	[ ]	WEAKNESS	[ ]
STRONG	[ ]	NOT MET	[ ]
SATISFACTORY	[ ]		

SUPPORTING COMMENTS: _____

_____

_____

_____

_____

RECOMMENDATIONS: _____

_____

_____

_____

_____

EMERGENCY OPERATIONS FACILITY OBJECTIVE EVALUATION FORM

NAME: _____

13. Demonstrate the ability to correctly complete the Offsite Agency Notification Form. (Performance Indicator)

PERFORMANCE:

NOT APPLICABLE	[ ]	MINOR PROBLEMS	[ ]
NOT OBSERVED	[ ]	WEAKNESS	[ ]
STRONG	[ ]	NOT MET	[ ]
SATISFACTORY	[ ]		

SUPPORTING COMMENTS: _____

_____

_____

_____

_____

RECOMMENDATIONS: _____

_____

_____

_____

_____

EMERGENCY OPERATIONS FACILITY OBJECTIVE EVALUATION FORM

NAME: _____

14. Demonstrate the ability to alert, advise and direct onsite non-essential personnel.

PERFORMANCE:

NOT APPLICABLE	[ ]	MINOR PROBLEMS	[ ]
NOT OBSERVED	[ ]	WEAKNESS	[ ]
STRONG	[ ]	NOT MET	[ ]
SATISFACTORY	[ ]		

SUPPORTING COMMENTS: _____

_____

_____

_____

_____

RECOMMENDATIONS: _____

_____

_____

_____

_____

EMERGENCY OPERATIONS FACILITY OBJECTIVE EVALUATION FORM

NAME: _____

15. Demonstrate the ability to direct and coordinate emergency responses.

PERFORMANCE:

NOT APPLICABLE	[ ]	MINOR PROBLEMS	[ ]
NOT OBSERVED	[ ]	WEAKNESS	[ ]
STRONG	[ ]	NOT MET	[ ]
SATISFACTORY	[ ]		

SUPPORTING COMMENTS: _____

_____

_____

_____

_____

RECOMMENDATIONS: _____

_____

_____

_____

_____

EMERGENCY OPERATIONS FACILITY EVALUATION FORM

NAME: _____

16. Demonstrate the ability to transfer emergency direction from the Control Room (CR), to the TSC, and finally to the EOF, or from the Control Room directly to the EOF.

PERFORMANCE:

NOT APPLICABLE	[ ]	MINOR PROBLEMS	[ ]
NOT OBSERVED	[ ]	WEAKNESS	[ ]
STRONG	[ ]	NOT MET	[ ]
SATISFACTORY	[ ]		

SUPPORTING COMMENTS: _____

_____

_____

_____

_____

RECOMMENDATIONS: _____

_____

_____

_____

_____

EMERGENCY OPERATIONS FACILITY OBJECTIVE EVALUATION FORM

NAME: _____

18. Demonstrate the ability to provide onsite contamination controls, and area access controls.

PERFORMANCE:

NOT APPLICABLE	[ ]	MINOR PROBLEMS	[ ]
NOT OBSERVED	[ ]	WEAKNESS	[ ]
STRONG	[ ]	NOT MET	[ ]
SATISFACTORY	[ ]		

SUPPORTING COMMENTS: _____

_____

_____

_____

_____

RECOMMENDATIONS: _____

_____

_____

_____

_____

EMERGENCY OPERATIONS FACILITY OBJECTIVE EVALUATION FORM

NAME: _____

19. Demonstrate the ability to continuously monitor and control emergency worker exposures.

PERFORMANCE:

NOT APPLICABLE	[ ]	MINOR PROBLEMS	[ ]
NOT OBSERVED	[ ]	WEAKNESS	[ ]
STRONG	[ ]	NOT MET	[ ]
SATISFACTORY	[ ]		

SUPPORTING COMMENTS: _____

_____

_____

_____

_____

RECOMMENDATIONS: _____

_____

_____

_____

_____

EMERGENCY OPERATIONS FACILITY OBJECTIVE EVALUATION FORM

NAME: _____

24. Demonstrate the ability to determine source terms and dose projections, evaluate dose projections against protective action guides and determine appropriate onsite and offsite protective actions.

PERFORMANCE:

NOT APPLICABLE	[ ]	MINOR PROBLEMS	[ ]
NOT OBSERVED	[ ]	WEAKNESS	[ ]
STRONG	[ ]	NOT MET	[ ]
SATISFACTORY	[ ]		

SUPPORTING COMMENTS: _____

_____

_____

_____

_____

RECOMMENDATIONS: _____

_____

_____

_____

EMERGENCY OPERATIONS FACILITY OBJECTIVE EVALUATION FORM

NAME: _____

25. Demonstrate the ability to make timely protective action recommendations to offsite agencies (Performance Indicator).

PERFORMANCE:

NOT APPLICABLE [ ]
NOT OBSERVED [ ]
STRONG [ ]
SATISFACTORY [ ]
MINOR PROBLEMS [ ]
WEAKNESS [ ]
NOT MET [ ]

SUPPORTING COMMENTS: _____

_____

_____

_____

_____

RECOMMENDATIONS: _____

_____

_____

_____

EMERGENCY OPERATIONS FACILITY OBJECTIVE EVALUATION FORM

NAME: _____

26. Demonstrate the ability to adequately form, brief, dispatch, and debrief Emergency Teams.

PERFORMANCE:

NOT APPLICABLE	[ ]	MINOR PROBLEMS	[ ]
NOT OBSERVED	[ ]	WEAKNESS	[ ]
STRONG	[ ]	NOT MET	[ ]
SATISFACTORY	[ ]		

SUPPORTING COMMENTS: _____

_____

_____

_____

_____

RECOMMENDATIONS: _____

_____

_____

_____

EMERGENCY OPERATIONS FACILITY OBJECTIVE EVALUATION FORM

NAME: _____

27. Demonstrate the capability to coordinate the preparation, review and release of information with state and local government agencies, and provide press releases to the media in a timely manner.

PERFORMANCE:

NOT APPLICABLE [ ]
NOT OBSERVED [ ]
STRONG [ ]
SATISFACTORY [ ]
MINOR PROBLEMS [ ]
WEAKNESS [ ]
NOT MET [ ]

SUPPORTING COMMENTS: _____

RECOMMENDATIONS: _____

EMERGENCY OPERATIONS FACILITY OBJECTIVE EVALUATION FORM

NAME: _____

33. Demonstrate the ability to conduct a post-accident recovery and re-entry seminar with federal, state and local officials.

PERFORMANCE:

NOT APPLICABLE [ ]
NOT OBSERVED [ ]
STRONG [ ]
SATISFACTORY [ ]
MINOR PROBLEMS [ ]
WEAKNESS [ ]
NOT MET [ ]

SUPPORTING COMMENTS: _____

_____

_____

_____

_____

RECOMMENDATIONS: _____

_____

_____

_____

EVALUATION CHECKLIST
Offsite Radiological Monitoring Team

Team Assigned _____	Yes	No	Not Observed
1. Did the team arrive at the staging area and prepare themselves in a timely manner?	____	____	____
2. Was the team equipped with the following supplies:			
a. Survey instruments?	____	____	____
b. Air samplers?	____	____	____
c. Radio?	____	____	____
d. Maps?	____	____	____
e. Protective clothing?	____	____	____
f. Respiratory protection equipment?	____	____	____
3. With respect to the team's vehicle:			
a. Was it fully fueled?	____	____	____
b. Were the keys readily available?	____	____	____
c. Was a release survey completed prior to deployment?	____	____	____
4. Prior to deployment, was a team leader identified?	____	____	____
5. Prior to deployment, did team personnel perform pre-operational checks on the following equipment:			
a. Radio?	____	____	____
b. Survey meters?	____	____	____
c. Sampling equipment?	____	____	____
6. Were the instruments calibrated within the current calendar quarter or within the prescribed schedule?	____	____	____
7. Was the vehicle properly designed or modified to hold team members, and monitoring, protective, safety and auxiliary equipment?	____	____	____

EVALUATION CHECKLIST
Offsite Radiological Monitoring Team (Con't)

Team Assigned _____	Yes	No	Not Observed
8. Was the vehicle and/or team equipped with a radio that permitted unimpeded transmission and reception of data and instructions?	____	____	____
9. Did the EOF provide adequate instructions regarding what measurements were to be performed?	____	____	____
10. Were communications properly maintained?	____	____	____
11. Did the Radiological Director exhibit good ALARA practices in directing the team?	____	____	____
12. Was information transmitted to the EOF in a timely manner?	____	____	____
13. Was the team kept apprised of the status of the emergency situation?	____	____	____
14. Were dose rate measurements taken to verify radiation levels while in transit to monitoring and/or sampling sites?	____	____	____
15. Was the team able to find the monitoring and/or sampling locations?	____	____	____
16. Did the team demonstrate a knowledge of proper survey and sampling techniques?	____	____	____
17. Did team personnel know how to operate and/or handle monitoring, sampling and auxiliary equipment?	____	____	____
18. Were air samplers run for an appropriate time interval?	____	____	____
19. Was the proper procedure used for field counting of airborne samples?	____	____	____

EVALUATION CHECKLIST
Offsite Radiological Monitoring Team (Con't)

	Team Assigned _____	Yes	No	Not Observed
20.	Were good sample handling techniques used to avoid cross-contamination?	____	____	____
21.	Were the following samples taken and documented IAW 0ERP01-ZV-TP02			
	a. Soil	____	____	____
	b. Water	____	____	____
	c. Vegetation	____	____	____
22.	Were vehicle surveys performed periodically?	____	____	____
23.	Was the team aware of sample drop location(s)?	____	____	____
24.	Did the team members keep track of their individual exposures?	____	____	____
25.	Were data sheets properly filled out and maintained?	____	____	____
26.	Were standby areas clearly identified to the team?	____	____	____
27.	Were spare batteries available for portable radios?	____	____	____
28.	Were the team members and vehicle properly surveyed upon completion of their monitoring tasks?	____	____	____
29.	Were the team members debriefed upon their return?	____	____	____

JOINT INFORMATION CENTER OBJECTIVE EVALUATION FORM

NAME: _____

1. Demonstrate the adequacy of the STPEGS Emergency Plan, and the Emergency Plan Implementing Procedures.

PERFORMANCE:

NOT APPLICABLE	[ ]	MINOR PROBLEMS	[ ]
NOT OBSERVED	[ ]	WEAKNESS	[ ]
STRONG	[ ]	NOT MET	[ ]
SATISFACTORY	[ ]		

SUPPORTING COMMENTS: _____

_____

_____

_____

_____

RECOMMENDATIONS: _____

_____

_____

_____

_____

_____

JOINT INFORMATION CENTER OBJECTIVE EVALUATION FORM

NAME: _____

2. Demonstrate the ability to activate, staff and operate the Technical Support Center (TSC), Operations Support Center (OSC), Emergency Operations Facility (EOF), and Joint Information Center (JIC) within the time frames specified in the Emergency Plan.

PERFORMANCE:

NOT APPLICABLE	[ ]	MINOR PROBLEMS	[ ]
NOT OBSERVED	[ ]	WEAKNESS	[ ]
STRONG	[ ]	NOT MET	[ ]
SATISFACTORY	[ ]		

SUPPORTING COMMENTS: _____

_____

_____

_____

_____

RECOMMENDATIONS: _____

_____

_____

_____

JOINT INFORMATION CENTER OBJECTIVE EVALUATION FORM

NAME: _____

3. Demonstrate the reliability and effective use of normal and emergency communications equipment and procedures.

PERFORMANCE:

NOT APPLICABLE	[ ]	MINOR PROBLEMS	[ ]
NOT OBSERVED	[ ]	WEAKNESS	[ ]
STRONG	[ ]	NOT MET	[ ]
SATISFACTORY	[ ]		

SUPPORTING COMMENTS: _____

_____

_____

_____

_____

RECOMMENDATIONS: _____

_____

_____

_____

_____

JOINT INFORMATION CENTER OBJECTIVE EVALUATION FORM

NAME: _____

5. Demonstrate the ability to provide an exercise scenario and controller organization that permits testing a major portion of the emergency plan.

PERFORMANCE:

NOT APPLICABLE	[ ]	MINOR PROBLEMS	[ ]
NOT OBSERVED	[ ]	WEAKNESS	[ ]
STRONG	[ ]	NOT MET	[ ]
SATISFACTORY	[ ]		

SUPPORTING COMMENTS: _____

_____

_____

_____

_____

RECOMMENDATIONS: _____

_____

_____

_____

_____

JOINT INFORMATION CENTER OBJECTIVE EVALUATION FORM

NAME: _____

6. Demonstrate the ability to conduct a post-exercise critique to identify weak or deficient areas that need correction.

PERFORMANCE:

NOT APPLICABLE	[ ]	MINOR PROBLEMS	[ ]
NOT OBSERVED	[ ]	WEAKNESS	[ ]
STRONG	[ ]	NOT MET	[ ]
SATISFACTORY	[ ]		

SUPPORTING COMMENTS: _____

_____

_____

_____

_____

RECOMMENDATIONS: _____

_____

_____

_____

_____

JOINT INFORMATION CENTER OBJECTIVE EVALUATION FORM

NAME: _____

27. Demonstrate the capability to coordinate the preparation, review and release of information with state and local government agencies, and provide press releases to the media in a timely manner.

PERFORMANCE:

NOT APPLICABLE [ ]
NOT OBSERVED [ ]
STRONG [ ]
SATISFACTORY [ ]
MINOR PROBLEMS [ ]
WEAKNESS [ ]
NOT MET [ ]

SUPPORTING COMMENTS: _____

_____

_____

_____

_____

RECOMMENDATIONS: _____

_____

_____

_____

_____

JOINT INFORMATION CENTER OBJECTIVE EVALUATION FORM

NAME: _____

28. Demonstrate the capability at the JIC to respond directly to questions from the media and/or public concerning real and rumored events of an emergency at STPEGS.

PERFORMANCE:

NOT APPLICABLE	[ ]	MINOR PROBLEMS	[ ]
NOT OBSERVED	[ ]	WEAKNESS	[ ]
STRONG	[ ]	NOT MET	[ ]
SATISFACTORY	[ ]		

SUPPORTING COMMENTS: _____

_____

_____

_____

_____

RECOMMENDATIONS: _____

_____

_____

_____

JOINT INFORMATION CENTER OBJECTIVE EVALUATION FORM

NAME: _____

29. Demonstrate the capability at the JIC to identify rumors and correct false information concerning an emergency at STPEGS.

PERFORMANCE:

NOT APPLICABLE	[ ]	MINOR PROBLEMS	[ ]
NOT OBSERVED	[ ]	WEAKNESS	[ ]
STRONG	[ ]	NOT MET	[ ]
SATISFACTORY	[ ]		

SUPPORTING COMMENTS: _____

_____

_____

_____

_____

RECOMMENDATIONS: _____

_____

_____

_____

JOINT INFORMATION CENTER OBJECTIVE EVALUATION FORM

NAME: _____

30. Demonstrate the capability at the JIC to coordinate and assemble emergency information for dissemination to the media and/or public.

PERFORMANCE:

NOT APPLICABLE	[ ]	MINOR PROBLEMS	[ ]
NOT OBSERVED	[ ]	WEAKNESS	[ ]
STRONG	[ ]	NOT MET	[ ]
SATISFACTORY	[ ]		

SUPPORTING COMMENTS: _____

_____

_____

_____

_____

RECOMMENDATIONS: _____

_____

_____

_____

SECURITY OBJECTIVE EVALUATION FORM

NAME: _____

14. Demonstrate the ability to alert, advise and direct onsite non-essential personnel.

PERFORMANCE:

NOT APPLICABLE	[ ]	MINOR PROBLEMS	[ ]
NOT OBSERVED	[ ]	WEAKNESS	[ ]
STRONG	[ ]	NOT MET	[ ]
SATISFACTORY	[ ]		

SUPPORTING COMMENTS: _____

_____

_____

_____

_____

RECOMMENDATIONS: _____

_____

_____

_____

_____

SECURITY OBJECTIVE EVALUATION FORM

NAME: _____

31. Demonstrate the ability to control access to the Owner Controlled Area, the Protected Area and the Emergency Response Facilities.

PERFORMANCE:

NOT APPLICABLE [ ]
NOT OBSERVED [ ]
STRONG [ ]
SATISFACTORY [ ]
MINOR PROBLEMS [ ]
WEAKNESS [ ]
NOT MET [ ]

SUPPORTING COMMENTS: _____

_____

_____

_____

_____

RECOMMENDATIONS: _____

_____

_____

_____

SECURITY OBJECTIVE EVALUATION FORM

NAME: _____

32. Demonstrate the ability to provide initial and continuous accountability of onsite personnel.

PERFORMANCE:

NOT APPLICABLE [ ]
NOT OBSERVED [ ]
STRONG [ ]
SATISFACTORY [ ]
MINOR PROBLEMS [ ]
WEAKNESS [ ]
NOT MET [ ]

SUPPORTING COMMENTS: _____

_____

_____

_____

_____

RECOMMENDATIONS: _____

_____

_____

_____

EMERGENCY DRILL - EVALUATOR / CONTROLLER LOG Page ___ of ___

EVALUATOR / CONTROLLER _____

DATE OF DRILL _____

AREA OF RESPONSIBILITY _____

TIME	COMMENTS

T022426
08/10/00 11:12

Equipment Clearance Order

DRAFT

Eco No : **A 12283** Unit : **1**

Fire Protection :
Security :
Reason : BECAUSE

What is being Tagged: CS - PMP - 101C Tagtpns : 2N101NPA101C

Service Desc : CONTAINMENT SPRAY PUMP 1C

Work Description : *!*!*!*CLEARANCE FOR DRILL ONLY*!*!*!*

SRO Review :

SRO Approval to hang all tags :

Notes : *!*!*!*CLEARANCE FOR DRILL ONLY*!*!*!*

T022426
08/10/00 11:12

Equipment Clearance Order

DRAFT

Ready for craft review (Signature/Date/Time): _____

WAN/Procedure	Craft	Craft Review SRO	Acceptor (Signature, Badge, Phone, Date/Time)	Released By (Sign,Date/Time)
	/			
!!*!*CLEARANCE FOR DRILL ONLY*!*!*!*				

T022426
08/10/00 11:12

Equipment Clearance Order

DRAFT

TYPE	LINE No.	BDRY	COMPONENT TAGGED OR INSTRUCTIONS		ACTION	EXEC SEQ.	REQUIRED POSITION	IV REQ.
D	1		CS - CRHS - 0836 CSS PUMP 1C 00009E0CS01#1 Sheet 01 Grid N/A 1-EAB-35' 203 Col D21 5 - MAIN CONTROL ROOM	C1CSHS0836	HANG	1	PULL TO LOCK DRAFT Hung By Iv'ed By	Y
D	2		CS - CRHS - 0001C PUMP 1C DISCH ISOL MOV-0001C 00009E0CS02#1 Sheet 01 Grid N/A 1-EAB-35' 203 Col D21.5 - MAIN CONTROL ROOM	C1CSHS0001C	HANG	1	AUTO/CLOSE DRAFT Hung By Iv'ed By	Y
D	3	B	CS - MOV - 0001C MCC E1C2 CUB N3 CNTMT SPRAY PUMP 1C DISCH ISOL(1-CS-MOV-0001C)TPNS: 2N101XCS0001C 00009E0PMAH#1 Sheet 01 Grid N/A 1-EAB-60' 318 Col E-23 -	C1PMMCEC2N3	HANG	2	OFF DRAFT Hung By Iv'ed By	Y
D	4	B	CS - PMP - 101C SWGR E1C CUB 10 CONTAINMENT SPRAY PUMP 1C- TPNS:2N101NPA101C 00009E0PKAC#1 Sheet 01 Grid N/A 1-EAB-60' 318 Col D-24 -	C1PKSG0E1C10	HANG	2	RACKED OUT DRAFT Hung By Iv'ed By	Y
	5		CS - PMP - 101C SWGR E1C CUB 10 CLOSING POWER FUSES 00009E0PKAC#1 Sheet 01 Grid N/A 1-EAB-60' 318 Col D-24 -	C1PKSG0E1C10		2	OFF DRAFT Hung By Iv'ed By	Y
	6		CS - PMP - 101C SWGR E1C CUB 10 TRIPPING POWER FUSES 00009E0PKAC#1 Sheet 01 Grid N/A 1-EAB-60' 318 Col D-24 -	C1PKSG0E1C10		2	OFF DRAFT Hung By Iv'ed By	Y

T022426
08/10/00 11:39

Equipment Clearance Order

DRAFT

Eco No : A 12284 Unit : 1

Fire Protection :
Security :
Reason :

What is being Tagged: FC - PMP - 101B Tagtpns : 3R211NPA101B

Service Desc : SPENT FUEL POOL COOLING PUMP 1B

Work Description : *!*!*!*CLEARANCE FOR DRILL ONLY*!*!*!*

SRO Review :

SRO Approval to hang all tags :

Notes : *!*!*!*CLEARANCE FOR DRILL ONLY*!*!*!*
PERFORM CELL SWITCH CHECK PER 0POP01-AE-0001

DRAFT

Ready for craft review (Signature/Date/Time): _____

WAN/Procedure	Craft	Craft Review SRO	Acceptor (Signature, Badge, Phone, Date/Time)	Released By (Sign,Date/Time)
	/			
!!*!*CLEARANCE FOR DRILL ONLY*!*!*!*				

T022426
08/10/00 11:39

Equipment Clearance Order

DRAFT

TYPE	LINE No.	BDRY	COMPONENT TAGGED OR INSTRUCTIONS		ACTION	EXEC SEQ.	REQUIRED POSITION	IV REQ.
D	1		FC - CRHS - 1408A SPENT FUEL POOL COOLING PUMP 1B NEED TO START 8-HOUR LOGS ON SFP TEMPERATURE 00009E0FC01#1 Sheet 01 Grid N/A 1-EAB-35' 203 Col D5-21.5 - MAIN CONTROL ROOM	C1FCHS1408A	HANG	1	PULL TO LOCK DRAFT Hung By / Iv'ed By	Y
D	2	B	FC - PMP - 101B LC E1C1 CUB 4D SPENT FUEL POOL COOLING PUMP1B- TPNS:3R211NPA101B PERFORM CELL SWITCH CHECK PER 0POP01-AE-0001 00009E0PLAC#1 Sheet 01 Grid N/A 1-EAB-60' 318 Col D-23 -	C1PLSG0E1C4D	HANG	2	RACKED OUT DRAFT Hung By / Iv'ed By	Y
D	3	B	FC - VLV - 0010B SFP COOLING PUMP 1B DISCHARGE VALVE 5R219F05028#1 Sheet N/A Grid N/ 1-FHB-21' 106 Col R1-30.2 - SFPC PUMP 1B ROOM	3R211XFC0010B	HANG	3	CLOSED DRAFT Hung By / Iv'ed By	Y

Unit (1) 2

Permit Number 43.627.009 (Drill)

Expiration date 10/31/00

Permit flow rate limit 4,500 scfm

☒ The RCB atmosphere has been sampled and analyzed. A pre-release dose projection has been performed and no projected dose exceeds 50% of its stated limits.

Performed By: Chemistry Technician Date/Time: 10/1/00 0900

Reviewed By: Chemistry Supervisor Date/Time: 10/1/00 1000

☐ The RCB atmosphere has been sampled and analyzed. A pre-release dose projection has been performed and indicates that the release of the RCB atmosphere will exceed 50% of a dose limit but not exceed 100% of a dose limit.

Performed By: N/A Date/Time: N/A

Reviewed By: N/A Date/Time: N/A
Chemistry Manager/Designee

☐ The RCB atmosphere has been sampled and analyzed. A pre-release dose projection has been performed and indicates that the release of the RCB atmosphere will exceed 100% of a dose limit and 0PSP07-VE-0005, Unit Vent Effluent Permit, has been completed.

Performed By: N/A Date/Time: N/A

Reviewed By: N/A Date/Time: N/A
Chemistry Manager/Designee

Remarks:

DRILL

Unit (1) 2 DRILL

Page ___ of ___

Permit Number: 43,0027,009	Expiration date: 10-30-00	Permit flow rate limit: 4,500 SCFM

Monitor Channel RM-11 Point	Measured Activity (uCi/cc)	Multiplication Factor or Value	Notification Level (uCi/cc)
RT-8011 Particulate 1111/2111	1.43 E-9	1.5 x	2.145 E-9
RT-8011 Iodine 1211/2211	2.56 E-14	≤ 1.0 E-10 = 1.5 E-10 >1.0 E-10 = 1.5 x	1.50 E-10
RT-8011 Noble Gas 1311/2311	1.94 E-5	≤ 1.25 E-05 = 2.0 x >1.25 E-05 = 1.5 x	2.91 E-5
RT-8012 Noble Gas 1012/2012 & RT-8013 Noble Gas 1013/2013	1.20 E-5 (Grab Sample Results)	≤ 3.0 E-06 = 1.25 E-05 > 3.0 E-06 = 1 E-05 + (1.5 x)	2.80 E-5

Activities < Notification Levels	IF >Notification Levels: Chem. Advised	IF >Notification Levels: Individual Advised (Name)	Reason: (1)	Flow Rate (scfm) (2)	Initiated: By	Initiated: Date & Time	Terminated: By	Terminated: Date & Time
(Yes) No	☐		A (PC) RAQ	4500	Operations	1300 10/1/00	Operations	1315 10/1/00
(Yes) No	☐		A (PC) RAQ	4500		1507 10/3/00		1515 10/3/00
(Yes) No	☐		A (PC) RAQ	4500		0429 10/5/00		0437 10/5/00
(Yes) No	☐		A (PC) RAQ	4500		1635 10/7/00		1650 10/7/00
(Yes) No	☐		A (PC) RAQ	4500		1820 10/9/00		1835 10/9/00
(Yes) No	☐		A (PC) RAQ	4500		2125 10/12/00		2134 10/12/00
(Yes) No	☐		A (PC) RAQ	4500		0500 10/18/00		

(1) Purge reason: A = ALARA, PC = Pressure Control, RAQ = Respirable Air Quality.

(2) For Normal Purges a nominal value of 40,000 scfm should be used. For Supplementary Purges a nominal value of 4500 scfm should be used unless the purge flow rate is determined to be ≤ 2500 scfm, then the actual flow should be recorded.

Remarks: _____

DRILL

Page ___ of ___

Activities	IF >Notification Levels		Reason:	Flow Rate	Initiated		Terminated	
< Notification Levels	Chem. Advised	Individual Advised (Name)	(1)	(scfm) (2)	By	Date & Time	By	Date & Time
Yes / No	☐		A PC RAQ					
Yes / No	☐		A PC RAQ					
Yes / No	☐		A PC RAQ					
Yes / No	☐		A PC RAQ					
Yes / No	☐		A PC RAQ					
Yes / No	☐		A PC RAQ					
Yes / No	☐		A PC RAQ					
Yes / No	☐		A PC RAQ					
Yes / No	☐		A PC RAQ					
Yes / No	☐		A PC RAQ					
Yes / No	☐		A PC RAQ					
Yes / No	☐		A PC RAQ					

(1) Purge reason: A = ALARA, PC = Pressure Control, RAQ = Respirable Air Quality.

(2) For Normal Purges a nominal value of 40,000 scfm should be used. For Supplementary Purges a nominal value of 4500 scfm should be used unless the purge flow rate is determined to be ≤ 2500 scfm, then the actual flow should be recorded.

Remarks: _____

DRILL

Importance Factor [1C]	**PM**	**WORK ORDER SECTION 1**	PM # : MM-1-IL-91000110 MODEL#: 47221 WAN# : 167770 REV : 05.0

g / Tpns # : 2C261SPM090A ZM-16 : N System : IL DTL No.:
Component Desc. : RCB PERSONNEL AIRLOCK
Building : RCB Lead Work Group : MM **Z1.1**
Room : 502 Support Groups : PT
Elevation : 68 Area/Other : UNIT: 1

Activity Description: REPLACE MAB DOOR RCB SIDE SEAL ONLY RCB PERSONNEL AIRLOCK

Scope/Intent : REPLACE THE UNIT 1 MAB SIDE DOOR INFLATABLE SEAL(1) LOCATED CLOSEST TO THE REACTOR WHEN THE DOOR IS IN THE CLOSED POSITION. AND THE O-RINGS(2) ON THE AIR INLET/OUTLET STEM. PERFORM APPROPRIATE POST MAINTENANCE TESTING TO VERIFY OPERABILITY.

SECTION 2

Frequency	: 260	Med Feg	: IL-00	Quality Related	: Y
Mode	: ALL	FFEG WW	: 7	QA/QC	: 2
EQ Related	: N	Med Train	: N	OPS REVIEW?	:
EOL Replacement	: N RDD: N/A	PMSI Status	: A	Risk Rank	: N/A
				GQ Grade	: N/A

Coordinate With : WW07 IL00 (FEG) PMT Loc: ST

Early Start	: 10/16/2000	ES WORK WEEK	: 7	Milestone	:
Late Finish	: 08/10/2001	OI : AP10	RPT GRP :	LCO	: N
Projected Start	: 08/27/2001	P&ID :			

CTION 3 COMMENTS

SECTION 4 PERFORMANCE HISTORY

WAN	COMPLETED	STATUS	DEF
78564	11/07/1996	95	C
96046	11/04/1996	95	C
66718	04/11/1996	80	S

FEEDBACKS

FB NUMBER	ASSIGN TO	KEYWORD	STATUS

OOS#: _____ Cleared: _____ Date

167770

SECTION 5 WORK START AUTHORITY Reactor Operations

Time when component must be returned to service

_____ Time _____ Date

1

Original _____ 10-18-00
1st Additional _____
2nd Additional _____
Signature Date

WORK COMPLETION					WORK STATUS
	WO Tag removed	: [YES]	[NO]	[N/A/]	
	Clearance / Permits Released	: [YES]	[NO]	[N/A/]	COMPLETE ☐ PARTIAL ☐
	PMT Completed	: [YES]	[NO]	[N/A/]	

WORK SUPERVISOR WORK COMPLETE: _____ _____
PMT COMPLETE : _____ _____
WORK START AUTHORITY : _____ _____
PLANT ENG DEPT REVIEW : _____ _____

OUSEKEEPING ZONE	IV	
CLEANLINESS CLASS	C	
EFFECT CHARCOAL FILTER	N	
CONFINED SPACE	N	PERMIT NO.: N/A
FIRE HAZARD EVAL	N	PERMIT NO.: N/A
FIRE IMPAIRMENT	N	PERMIT NO.:
FIRE BARRIER BREACH	N	PERMIT NO.:
HOT WORK PERMIT	N	PERMIT NO.: N/A
ADDITIONAL SECURITY REQ.	N	PERMIT NO.: N/A
RADIATION WORK PERMIT	Y	PERMIT NO.:
EQUIPMENT CLEARANCE	Y	PERMIT NO.:
SCAFFOLDING PERMIT	N	PERMIT NO.:
INSULATION PERMIT	N	PERMIT NO.:
COATINGS PERMIT	N	PERMIT NO.:
HVAC BOUNDARY BREACH	N	PERMIT NO.: N/A

SECTION 8: M & TE Used

DESCRIPTION	I.D. NO.	CAL. DUE
TORQUE WRENCH		
RANGE :	DATE USED :	
RANGE :	DATE USED :	
RANGE :	DATE USED :	
RANGE :	DATE USED :	
RANGE :	DATE USED :	

FOR INFORMATION ONLY

PM	PERSONNEL PERFORMING MAINTENANCE SECTION 9	PM# MM-1-IL-91000110 WAN# 167770	MODEL # 47221 REV : 05.0

Name (Print)	Craft	Signature	Hrs Wkd	Date
JOE RAY	M/M	[signature]	5	10-18-00
RAY JOE	M/M	[signature]	5	10-18-00
	/			
	/			
	/			
	/			
	/			
	/			
	/			
	/			
	/			
	/			
	/			
	/			
	/			
	/			
	/			
	/			
	/			
	/			

OPTIMUM CREW SIZE: _____ TOTAL HRS: _____ FOR INFORMATION ONLY

PM	SPARE PARTS / MATERIAL USED SECTION 10	PM# MM-1-IL-91000110 WAN# 167770	MODEL # 47221 REV : 05.0

;P P/N	MCCODE	MAF/WAN REQ. NO.	L V	QTY REQ	UOM	QTY O/H	SPARE PARTS / MAT'L DESC	ASME	QTY USED
501-37478	C2CN		2	1	EA	100	RING, RETAINING		
501-51769	B2BN		1	1	EA	3	SEAL, FLEX INFLATABLE, 2		
501-51770	D2CN		2	1	ST	0	CLAMP, MODIFIED, BLANK,		
501-54875	B4CN		2	84	EA	35	SCREW, CAP, 3/8-16 X 1,		
560-28170	D2BV		1	1	EA	20	SILICONE, RELEASE SPRAY,		
587-1268	B2BN		1	2	EA	14	O-RING, 0.984 IN. ID X 0		

MAF (GIR) NO	PRINTED
	N

RETURN MAF :

.0 PREREQUISITES

1.01 GENERAL

1.01.01 RECORD THE SERIAL NUMBER OF THE NEW SEAL IN THE DOCUMENTATION SECTION.

1.02 SPECIAL TOOLS/ EQUIPMENT

		CAL REQ
1.02.01	TORQUE WRENCH	Y

2.0 PRECAUTIONS

2.01 DOOR SHALL BE IN THE CLOSED POSITION PRIOR TO ANY ROTATION OF THE HANDWHEEL TO PREVENT DOOR SEALS FROM OVER INFLATING AND RUPTURING. WITH SUPPLY AIR ISOLATED, ACCUMULATOR TANKS CONTAIN A SUFFICIENT VOLUME OF AIR TO INFLATE DOOR SEALS SEVERAL TIMES.

2.02 ENSURE A WARNING SIGN IS PLACED ON OR NEAR THE HANDWHEEL WHILE DOOR IS IN THE OPEN POSITION TO PREVENT ROTATION AND INADVERTENT INFLATION OF DOOR SEALS.

PM	STAR PAGE SECTION 11A	PM# MM-1-IL-91000110 WAN# 167770	MODEL # 47221 REV : 05.0

** S. T. A. R. **

PRIOR TO STARTING ANY WORK ACTIVIES, RECORD THE TAG / TPNS NUMBER(S), UNIT NUMBER, AND THE TRAIN / CHANNEL DESIGNATOR FROM THE COMPONENT(S) USING SELF-VERIFICATION TECHNIQUES AND ENSURE THE RECORDED INFORMATION MATCHES THE INFORMATION ON AND / OR THE SCOPE OF THIS DOCUMENT.

1) UNIT # : 1 TRAIN/CH : N/A TAG/TPNS# : 2C261SPM090A
INITIAL: _____ DATE : _____

2) UNIT # : _____ TRAIN/CH : _____ TAG/TPNS# : _____
INITIAL: _____ DATE : _____

3) UNIT # : _____ TRAIN/CH : _____ TAG/TPNS# : _____
INITIAL: _____ DATE : _____

4) UNIT # : _____ TRAIN/CH : _____ TAG/TPNS# : _____
INITIAL: _____ DATE : _____

5) UNIT # : _____ TRAIN/CH : _____ TAG/TPNS# : _____
INITIAL: _____ DATE : _____

6) UNIT # : _____ TRAIN/CH : _____ TAG/TPNS# : _____
INITIAL: _____ DATE : _____

7) UNIT # : _____ TRAIN/CH : _____ TAG/TPNS# : _____
INITIAL: _____ DATE : _____

8) UNIT # : _____ TRAIN/CH : _____ TAG/TPNS# : _____
INITIAL: _____ DATE : _____

9) UNIT # : _____ TRAIN/CH : _____ TAG/TPNS# : _____
INITIAL: _____ DATE : _____

10) UNIT # : _____ TRAIN/CH : _____ TAG/TPNS# : _____
INITIAL: _____ DATE : _____

11) UNIT # : _____ TRAIN/CH : _____ TAG/TPNS# : _____
INITIAL: _____ DATE : _____

12) UNIT # : _____ TRAIN/CH : _____ TAG/TPNS# : _____
INITIAL: _____ DATE : _____

13) UNIT # : _____ TRAIN/CH : _____ TAG/TPNS# : _____
INITIAL: _____ DATE : _____

3.0 WORK INSTRUCTIONS

3.01 REPLACE DOOR SEALS AND O-RINGS IN ACCORDANCE WITH 0PMP04-ZG-0013.

```
* * * * * * * * * * * * * * * * * * * * * * *
*                  NOTE                     *
*                  ----                     *
*      THE FOLLOWING STEPS ARE REQUIRED     *
*      FOR POST MAINTENANCE TESTING         *
*                                           *
* * * * * * * * * * * * * * * * * * * * * * *

* * * * * * * * * * * * * * * * * * * * * * *
*                 CAUTION                   *
*                 ----                      *
*     DO NOT CLOSE DOOR AND LEAVE SEALS     *
*     INFLATED UNTIL AFTER PMT LEAK CHECK   *
*     IS PERFORMED TO PREVENT INADVERTENT   *
*     OVERPRESSURIZATION OF THE PAL BARREL  *
* * * * * * * * * * * * * * * * * * * * * * *
```

3.02 REQUEST OPERATIONS AND PERFORMANCE TECHS TO PERFORM APPLICABLE STEPS OF 0PSP11-XC-0009 AND 0PSP11-XC-0008 TO CHECK FOR PROPER OPERATION. ASSURE OPERATIONS IS NOTIFIED, BOTH SURVEILANCES MUST BE PERFORMED AND FOUND TO BE SATIFACTORY PRIOR TO DOOR BEING DECLARED OPERABLE.

3.02.01 USING APPROVED LEAK DETECTOR, INSPECT ALL AIR LINE CONNECTIONS THAT WERE DISASSEMBLED/REASSEMBLED OR THAT MAY HAVE BEEN DISTURBED DURING PM ACTIVITIES. TESTING TO BE PERFORMED WITH AIRLINES UNDER NORMAL OPERATING PRESSURE. ACCEPTANCE CRITERIA SHALL BE ZERO LEAKAGE. UPON COMPLETION OF LEAKAGE INSPECTIONS, CLEAN/REMOVE LEAKAGE DETECTOR FLUID FROM AIR LINE(S) AND ASSOCIATED FITTINGS.

3.03 DOCUMENT RESULTS OF POST MAINTENANCE TEST IN SECTION 14.

3.04 NOTIFY FOREMAN OF ANY PROBLEMS PRIOR TO INITIATION OF CORRECTIVE ACTION.

4.0 REFERENCES

4.01 IMPLEMENTATION REFERENCES

			QCIP
4.01.01	VTI DRAW	0011-0100187PD	VENDOR DRAWING
4.01.02		0PMP04-ZG-0013	PERSONNEL AIRLOCK INSPECTION AND MAINTENANCE
4.01.03	VTI DRAW	0011-0100041PD	VENDOR DRAWING
4.01.04	VTI DRAW	0011-0101390PD	VENDOR DRAWING

4.02 SOURCE DOCUMENTS

		QCIP
4.02.01	9000440	MATS ITEM REGARDING SPR 90-0193
4.02.02		VENDOR MANUAL

5.0 DOCUMENTATION

5.01 SERIAL # OF THE NEW DOOR SEAL: _____

5.02 DATA SHEETS 0PMP04-ZG-0013

PM	Reliability Data/Work Package Completion	PM# MM-1-IL-91000110 MODEL # 47221 WAN# 167770 REV : 05.0

TPNS/EE580 NUMBER: 2C26/SPM090A **Subcomponent:** N/A JR
(failed equipment)

Serial Number (Old) N/A JR **(New)** N/A JR

RELIABILITY ENGINEERING DATA

Specific Failure/Deficiency: _____

Specific Work Performed: _____

Did the deficiency prevent equipment ability to function? [ ] Yes [ ] No [ ] N/A

Was the 'as-found' calibration data out of tolerance? [ ] Yes [ ] No [ ] N/A

Should Preventive Maintenance be performed: (circle one) 1 2 3 4 5
(Less often) (Adequate) (More often)

WORK PACKAGE COMPLETION (Work Scope/Area only)

Work Area clean/Tools removed: _____

Equipment/Component hardware is secure and intact: _____

No abnormal conditions or visible damage observed: _____

Parts returned to Cognizant Engineer (SCAQ and CAQ-S Root Cause): _____

Planning Feedback

_____

Work Completed _____ _____ _____

QAT Completed _____ _____ _____

PM	CRAFT WORK SUMMARY SHEET	PM# MM-1-IL-91000110 WAN# 167770	MODEL # 47221 REV : 05.0

OBTAINED WORK START AND SIGNED ON ECO AS FOUND CONDITION, MAB DOOR RCB SIDE INFLATABLE SEAL WAS EXTRUDED FROM SEAL CLAMPS. LOCATION MIDDLE TOP APPROXIMATELY 1/3 OF THE WAY AROUND DOOR LOOKING TOWARDS MAB, DOWN TO MIDDLE OF DOOR. REMOVED MAB DOOR RCB SIDE SEAL [illegible] 10-18-00 TURNED PACKAGE OVER TO UNIT (1) BULK WORK CREW DAY SHIFT [illegible] 10-18-00

DITIONAL SHEETS ATTACHED & NUMBERED NO YES # SHEETS: _____

This report is SQA level 2 per OPGP07-ZA-0014