FORM NRC-313 I (1-79) 10 CFR 30

U.S. NUCLEAR REGULATORY COMMISSION

APPLICATION FOR BYPRODUCT MATERIAL LICENSE
INDUSTRIAL

Application dated 7/29/91

1. APPLICATION FOR: (Check and/or complete as appropriate)

X	a. NEW LICENSE
	b. AMENDMENT TO LICENSE NUMBER
	c. RENEWAL OF LICENSE NUMBER

See attached instructions for details.

Completed applications are filed in duplicate with the Division of Fuel Cycle and Material Safety, Office of Nuclear Material Safety and Safeguards, U.S. Nuclear Regulatory Commission, Washington, DC 20555 or applications may be filed in person at the Commission's office at [illegible] Street, NW, Washington, DC or 9650 Eastern Avenue, Silver Spring, Maryland.

2. APPLICANT'S NAME (Institution, firm, person, etc.)
ADVANCED DETECTION TECHNOLOGIES, INC.
TELEPHONE NUMBER, AREA CODE - NUMBER EXTENSION
203-355-5760

3. NAME OF PERSON TO BE CONTACTED REGARDING THIS APPLICATION
John Cholin
TELEPHONE NUMBER, AREA CODE - NUMBER EXTENSION
201-337-8621

4. APPLICANT'S MAILING ADDRESS (Include Zip Code)
5 Old Town Park Road, Unit #28
New Milford, CT 06776

5. STREET ADDRESS WHERE LICENSED MATERIAL WILL BE USED (Include Zip Code)
5 Old Town Park Road, Unit #28
New Milford, CT 06776

(IF MORE SPACE IS NEEDED FOR ANY ITEM, USE ADDITIONAL PROPERLY KEYED PAGES.)

6. INDIVIDUAL(S) WHO WILL USE OR DIRECTLY SUPERVISE THE USE OF LICENSED MATERIAL
(See Items 16 and 17 for required training and experience of each individual named below)

	FULL NAME	TITLE
a.	Lawrence D. Lussier	President
b.	Jeffrey G. Cholin	Vice President
c.		

7. RADIATION PROTECTION OFFICER
Jeffrey G. Cholin

Attach a resume of person's training and experience as outlined in Items 16 and 17 and describe his responsibilities under Item 16.

8. LICENSED MATERIAL

LINE NO.	ELEMENT AND MASS NUMBER A	CHEMICAL AND/OR PHYSICAL FORM B	NAME OF MANUFACTURER AND MODEL NUMBER (If Sealed Source) C	MAXIMUM NUMBER OF MILLICURIES AND/OR SEALED SOURCES AND MAXIMUM ACTIVITY PER SOURCE WHICH WILL BE POSSESSED AT ANY ONE TIME D
(1)	SEE ATTACHMENTS			
(2)				
(3)				
(4)				

	DESCRIBE USE OF LICENSED MATERIAL E
(1)	
(2)	
(3)	
(4)	

FORM NRC-313 I (1-79)

10.7-11

RECD JUL 30 1991

121196

9. STORAGE OF SEALED SOURCES

LINE NO.	CONTAINER AND DEVICE IN WHICH EACH SEALED SOURCE WILL BE STORED OR USED. A.	NAME OF MANUFACTURER B.	MODEL NUMBER C.
(1)	SEE ATTACHMENTS		
(2)			
(3)			
(4)			

10. RADIATION DETECTION INSTRUMENTS

LINE NO.	TYPE OF INSTRUMENT A	MANUFACTURER'S NAME B	MODEL NUMBER C	NUMBER AVAILABLE D	RADIATION DETECTED (alpha, beta gamma, neutron) E	SENSITIVITY RANGE (milliroentgens/hour or counts/minute) F
(1)	SEE ATTACHMENTS					
(2)						
(3)						
(4)						

11. CALIBRATION OF INSTRUMENTS LISTED IN ITEM 10

☐ a. CALIBRATED BY SERVICE COMPANY

NAME, ADDRESS, AND FREQUENCY

SEE ATTACHMENTS

☐ b. CALIBRATED BY APPLICANT

Attach a separate sheet describing method, frequency and standards used for calibrating instruments.

SEE ATTACHMENTS

12. PERSONNEL MONITORING DEVICES

TYPE (Check and/or complete as appropriate.) A	SUPPLIER (Service Company) B	EXCHANGE FREQUENCY C
☐ (1) FILM BADGE ☐ (2) THERMOLUMINESCENCE DOSIMETER (TLD) ☐ (3) OTHER (Specify): _____	SEE ATTACHMENTS	☐ MONTHLY ☐ QUARTERLY ☐ OTHER (Specify): _____

13. FACILITIES AND EQUIPMENT (Check were appropriate and attach annotated sketch(es) and description(s).

☐ a. LABORATORY FACILITIES, PLANT FACILITIES, FUME HOODS (Include filtration, if any), ETC

☐ b. STORAGE FACILITIES, CONTAINERS, SPECIAL SHIELDING (fixed and/or temporary), ETC

☐ c. REMOTE HANDLING TOOLS OR EQUIPMENT, ETC.

☐ d. RESPIRATORY PROTECTIVE EQUIPMENT, ETC. SEE ATTACHMENTS

14. WASTE DISPOSAL

a. NAME OF COMMERCIAL WASTE DISPOSAL SERVICE EMPLOYED

SEE ATTACHMENTS

b. IF COMMERCIAL WASTE DISPOSAL SERVICE IS NOT EMPLOYED, SUBMIT A DETAILED DESCRIPTION OF METHODS WHICH WILL BE USED FOR DISPOSING OF RADIOACTIVE WASTES AND ESTIMATES OF THE TYPE AND AMOUNT OF ACTIVITY INVOLVED. IF THE APPLICATION IS FOR SEALED SOURCES AND DEVICES AND THEY WILL BE RETURNED TO THE MANUFACTURER, SO STATE

SEE ATTACHMENTS

FORM NRC 313 I (1-79)

INFORMATION REQUIRED FOR ITEMS 15, 16 AND 17

Describe in detail the information required for Items 15, 16 and 17. Begin each item on a separate page and key to the application as follows:

15 RADIATION PROTECTION PROGRAM. Describe the radiation protection program as appropriate for the material to be used including the duties and responsibilities of the Radiation Protection Officer, control measures, bioassay procedures *(if needed)*, day-to-day general safety instruction to be followed, etc. If the application is for sealed source's also submit leak testing procedures, or if leak testing will be performed using a leak test kit, specify manufacturer and model number of the leak test kit.

16 FORMAL TRAINING IN RADIATION SAFETY. Attach a resume for each individual named in Items 5 and 7. Describe individual's formal training in the following areas where applicable. Include the name of person or institution providing the training, duration of training, when training was received, etc.

a. Principles and practices of radiation protection.

b. Radioactivity measurement standardization and monitoring techniques and instruments.

c. Mathematics and calculations basic to the use and measurement of radioactivity.

d. Biological effects of radiation.

17. EXPERIENCE. Attach a resume for each individual named in Items 6 and 7. Describe individual's work experience with radiation, including where experience was obtained. Work experience or on-the-job training should be commensurate with the proposed use. Include list of radioisotopes and maximum activity of each used.

18. CERTIFICATE

(This item must be completed by applicant)

The applicant and any official executing this certificate on behalf of the applicant named in Item 2, certify that this application is prepared in conformity with Title 10, Code of Federal Regulations, Part 30, and that all information contained herein, including any supplements attached hereto, is true and correct to the best of our knowledge and belief.

WARNING 18 U.S.C. Section 1001, Act of June 25, 1948; 62 Stat. 749; makes it a criminal offense to make a willfully false statement or representation to any department or agency of the United States as to any matter within its jurisdiction.

a. LICENSE FEE REQUIRED *(See Section 170.31, 10 CFR 170)* ~~$3,020.00~~ $2700.00	b. CERTIFYING OFFICIAL *(Signature)*
	c. NAME *(Type or print)* Lawrence D. Lussier
(1) LICENSE FEE CATEGORY ~~2F & 2I~~ 3H & 3B	d. TITLE President
(2) LICENSE FEE ENCLOSED $ ~~3,020.00~~ $2700.00	e. DATE July 29, 1991

FORM NRC-313 I (1-79)

*U.S. GOVERNMENT PRINTING OFFICE : 1984 O-421-637/151

030-32454

DIVISION OF FUEL CYCLE AND MATERIAL SAFETY
OFFICE OF NUCLEAR MATERIAL SAFETY AND SAFEGUARDS
U.S. NUCLEAR REGULATORY COMMISSION
Washington, D.C. 20555

Dear Sir:

As a result of the forced liquidation of the *FIRETEK* Corporation, *Advanced Detection Technologies, Inc.* has agreed to purchase the *FIRETEK* Smoke Detection product-lines, production equipment, inventory and customer records with the intent to continue the manufacture of these products.

In order to facilitate this acquisition, the *FIRETEK* license, 29-15775-03 was recently amended, listing our [redacted] as an additional storage location. We have retained John M. Cholin, formerly of the *FIRETEK* Corporation as a consultant to implement the acquisition and to assist us in our NRC licensing. We have obtained Mr. Jeffrey Cholin, former Vice President of Engineering of the *FIRETEK* Corporation as our Vice President of Engineering and Manufacturing to oversee our manufacturing enterprise. After the licenses are issued to *Advanced Detection Technologies, Inc.*, please proceed with termination of Firetek's licenses for distribution and possession. Firetek has supplied a letter to confirm this, please find it attached.

Enclosed is our License Application. We are applying for:

a. A possession License for the AM241 calibration standard and the NRD model A-001 sealed sources in the NRD A1008b holder, and
b. A Distribution License to allow Advanced Detection Technologies to distribute these smoke detectors free of further regulatory control per 10 CFR 32.27. Please note that we are maintaining the same model numbers of Firetek's components and we are not deleting any quality assurance procedures from the assembly process. In short, the detectors are identical.

Identical information packages are being sent to both the Regional (for possession review) and to Headquarters (for exempt distribution review). If any questions arise please call as we are very eager to commence production.

Sincerely,

ADVANCED DETECTION TECHNOLOGIES, INC.

Jeffrey C. Cholin
Vice President of Engineering and Manufacturing
JCC:plm:adtnrc3

Log	Aug-3-1
Remitter	
Check No.	1072
Amount	$2700
Fee Category	3B - $1,000 applied - see aug-1-HQs 021195
Type of Fee	PFP
Date Check Rec'd.	8/1/91
Date Completed	8/2/91
By:	Marsha

RECD JUL 30 1991

OFFICIAL RECORD COPY

121196

1072

ADVANCED DECTECTION TECH., INC.
5 OLD TOWN PARK RD., UNIT 28
NEW MILFORD, CT 06776

51-1093/211

July 29 19 91

PAY TO THE ORDER OF U. S. Nuclear Regulatory Commission $ 2,700.00

Two thousand seven hundred and 00/100 DOLLARS

Brookfield Bank
246 Federal Road
Brookfield, CT 06804

FOR

Pamela H. MacNeil

⑈001072⑈ ⑆021110937⑆ 550 007 143⑈

© DELUXE 1987

CMD: _____

LICENSE SCREEN #1 - LICENSE DATA 910730

DOCKET NO : 03014919 LICENSE NO : 29-15775-03__ STATUS: O
FED. GOVT : N INST. CODE : 15775 LICENSE REGION: 1
ISSUE DATE: 900223 ORIGINAL DATE: 900223 EXPIRATION DATE: 19950228

NAME : FIRETEK CORPORATION_____ DECOM FIN ASSUR REQD: N
DEPT/BUREAU: _____ SUBM: _
BUILDING : _____ CONT PLAN REQD: _ APPRV: _
STREET : 53 THOMAS RD._____
CITY : HAWTHORNE_____ STATE: NJ ZIP: 07506____

CONTACT PERSON: JOHN M. CHOLIN, PRESIDENT_____ PHONE: _____

PRIMARY PGM CODE : 03214 SECONDARY PGM CODES: _____
INSPECTION REGION: 1 PRIORITY CODE: 3 INSPECTION CATEGORY: E__

** 000 000 **

POSSESSION LICENSE - ANSWERS TO THE QUESTIONS ON FORM 3131

8. LICENSED MATERIAL

8.1 a. Americium 241
b. Solid Americium alloyed with gold and plated with gold.
c. Nuclear Radiation Developments, Inc. (NRD)
Model A-001 foil mounted in the NRD A-1008b rivet.
d. Up to 4000 sources of nominal .5 +/- 10% microcuries each for a maximum possessed activity of 2.0 millicurie.
e. The .5 microcurie Am241 sealed sources will be used to manufacture the *Advanced Detection Technologies, Inc.* Model 2160 smoke detector, formerly the FIRETEK Model 303-2160, including 303-2161, 303-2165 and 303-2166 as variants - using minor circuit board changes,and the *Advanced Detection Technologies, Inc.* Model 2180, 2181 and 2280 smoke detector, formerly the FIRETEK Model 313-2180, 2181 and 312-2280. Each detector will carry two 0.5 uci sources in it.

8.2 a. Americium 241
b. elemental, electroplated onto a 25mm stainless steel disc
c. Eberline Calibration Source #7392
d. 1160 dpm
e. The Americium 241 calibration source will be used to calibrate the radiation survey equipment referenced elsewhere in this application.

9. STORAGE OF SEALED SOURCES

9.1 The 0.5 microcurie sealed sources will be stored in a locked steel cabinet which is permanently mounted to the floor located at "A" on the attached floor plan drawing, Exhibit 1. The keys to the storage cabinet will be in the possession of the Company Radiation Safety Officer, Jeffrey G. Cholin.

Any sources which are staked onto chamber endplates that are not assembled into detectors by the end of the work day will be stored in the storage cabinet, "A".

The manufacturing plan currently calls for assembled detectors to go through a quality assurance program which will be located in the area identified as "B" in the attached floor plan drawing. Finished detectors will exist in small quantities at location "C".

9.2 The 1160 dpm Americium 241 calibration source will be stored in the locked steel cabinet, in location A, when not in use.

10. RADIATION DETECTION INSTRUMENTS

10.1 a. Scintillation counter
b. Eberline
c. SAC-4
d. 1
e. Alpha and gamma
f. 1 count per minute

10.2 a. Geiger Rate meter
b. Eberline
c. E-120 with HP-120AL probe
d. 1
e. Alpha and gamma
f. 0.02 mR/hr

11. CALIBRATION OF INSTRUMENTATION

The radiation detection instruments will be calibrated by the applicant.

On the first business day of each month the SAC-4 and the E-120 will be calibrated. A memo confirming the calibration will be submitted to the President and R.S.O. for their files. A specimen of this memo is attached as Exhibit 2.

Calibration of the SAC-4:

The SAC-4 will be turned on and left to warm up for one hour. After the SAC-4 has warmed up the ambient background count will be determined. Three counts will be taken of the background. These three counts will be averaged to obtain a figure for the background count, bg.

The SAC-4 will be used to count the radiation emitted by the 1160 dpm calibration source. Three one minute counts will be performed and the results averaged. The SAC-4 will be deemed calibrated when the average is within 5% of 471 counts assuming the emission of alpha particles from the Americium atoms is isotropic. The geometry shows that half of the emissions are emitted in the hemisphere opposite the photo multiplier tube of the SAC-4. So a maximum emission in the hemisphere adjacent to the p.m. tube is 580 Dpm. An inspection of the position of the p.m. tube yields that 81.3% of the emissions in the correct hemisphere will strike the p.m. tube yielding 471 Dpm. If the average is off, the bias voltage on the p.m. tube is adjusted. The background level is rechecked (average of 3 one minute counts). Then the calibration level is rechecked. Once the machine is calibrated, a calibration memo is filled out and the machine is tagged with a sticker showing the calibration date and levels.

Calibration of the E-120:

The E-120 will be allowed to warm up for five minutes after being turned on. Subsequent to warm up the switch shall be placed in the battery check mode and the battery shall be determined adequate to proceed.

The span switch shall then be switched to the "X0.1" position. The HP-210AL probe shall be positioned .5 inches above the plated surface of the 1160 dpm calibration source and the rate recorded. The E-120 shall be deemed calibrated when it displays a count rate of (471 cmp +bg) with a tolerance of +/- 100 cpm. If the count rate is outside this range then the adjustment potentiometer on the circuit board shall be adjusted and the process repeated.

The calibration of the E-120 shall be recorded on a calibration memo and on a label placed on the unit.

12. PERSONNEL MONITORING

Based upon the past 15 years of experience at the FIRETEK Corporation the applicant should not need a personnel monitoring program as the levels of exposure are below that which would justify a monitoring program. However, we plant to use a quarterly film badge monitoring program from Landauer.

Three models of detector will be manufactured by the applicant. The first is the *Advanced Detection Technologies, Inc.* Model 2160 and variations, formerly the FIRETEK Model 303-2160, which has an aluminum exterior shell. The second is the *Advanced Detection Technologies, Inc.* Model 2180 and 2181, formerly the FIRETEK Model 313-2180. The third is the Advanced Detection Technologies, Inc. Model 2280 which is a two wire version of the 2180. The 2180 and 2280 are housed in a plastic shell. The plastic shell would be far more transmittant to ionizing radiation than an aluminum shell. Consequently, all of our calculations are based upon the radiation profile of the unit with the plastic shell.

12.1 RADIATION PROFILE:

The maximum radiation level from any external surface of the 313-2180 and 313-2280 detectors was measured and found to be less than 0.05 mR/hr in contact with the thermoplastic shell of the prototype device. The measurement was made with an Eberline E-120 Geiger Counter with an Eberline HP-210 AL probe. This unit was calibrated using an Eberline calibration source of Americium 241 electro-deposited to an activity of 1160 d/m (Eberline serial #7392)

This is consistent with the measurements made on previous models of ionization detectors utilizing this chamber design. The radiation levels are determined for two prototype units. Each unit was constructed in the same way as the production units will be made and each unit contained two Am241 Model A-001 foils in a Model A-1008b rivet mounting. The foils in each unit were a nominal 0.5 microcuries each of Am241.

The radiation profiles measured using the E=120 G.M. were:

	UNIT A	UNIT B
Contact	.02mR/hr	0.02 to .05 mR/hr
25 cm	.02mR/hr	.02 mR/hr

Minimum sensitivity of the E-120 when calibrated to Am241 is .02 mR/hr. Contact readings with the E-120 unit represent radiation levels at 2 to 3 cm due to active volume of detector. Inasmuch as the readings obtained on the prototype units with the E-120 Geiger Counter confirmed the readings obtained on the earlier version of this detector (the 2160) the Thermo Luminescence dosimetry was not repeated.

AVERAGE RADIATION LEVEL 313-2180, 313-2280 DETECTORS

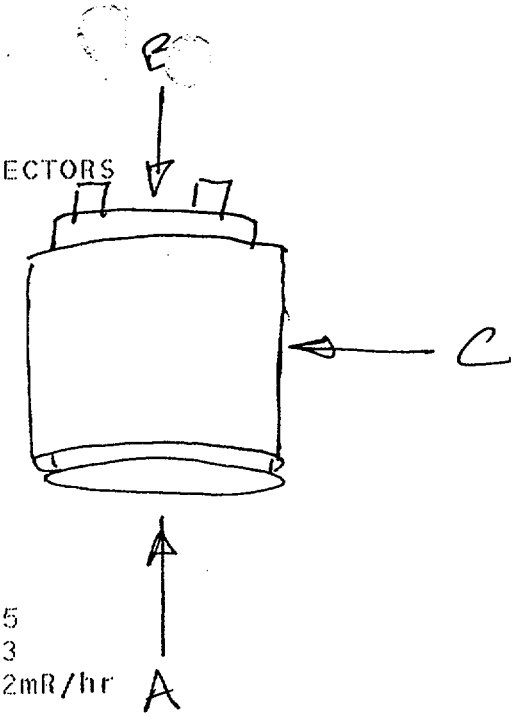

DISTANCE	ORIENTATION A	B	C
Contact	.02mR/hr	.02	.05
5 cm	.02	.02	.03
25 cm	.02	.02	.02mR/hr

It should be noted that 0.02 mR/hr is the lower limit of sensitivity of the Eberline E-120 meter and constitutes a "background" reading. Since the working volume of the detector is a cylinder with a diameter of 3.5 inches (8.9 cm) and length of 3.8 inches (9.6 cm) one can see that the contact measurement represents a measurement which is a nominal 1.75 inch (4.44 cm) radius from each source at the "C" orientation and .4 inch (1.0 cm) at the A and B orientations. Using the worst case condition of the "C" orientation and the 0.05 mR/hr and the inverse square law, we calculate 0.01 mR/hr at 5 cm from the detector and 0.0014 mR/hr at 25 cm.

13.1 A map of our facility (plan view) is attached as exhibit #1. A drawing of a typical assembly station is included as exhibit 3. Please not that the handling of sources which are not yet attached to a chamber endplate is restricted to the "radiation table" where we:

1. Categorize the source by alpha activity
2. Swage the source to the chamber end plates, swipe testing every tenth source and all tools for removable radiation.
3. Assemble chamber endplates onto chambers.

Once the chambers are assembled, they are mated to a circuit card assembly to make a detector assembly. This is done at the mechanical assembly bench. The detector assembly is then calibrated and burned in at the calibration bench. After burn in, all of the detectors are smoke tested at the smoke box and then returned to the mechanical assembly table for their outer shells. The detectors are rechecked for removable radiation prior to getting their shells.

13.2 As noted on our facility map and in section 9.1, the sources are stored in a robust metal cabinet which is bolted to the cement floor. The cabinet has a heavy padlock; only the Radiation Safety Officer has a key to this lock and it is kept locked in his desk.

14. WASTE DISPOSAL

The applicant will be purchasing sealed sources from NRD, Inc. of Grand Island, NY. As part of the purchase contract NRD agrees to accept any sources returned to it for disposal. Therefore, any and all radioactive sources that are in any way non-usable will be returned to the vendor. In this way there will not be accumulation of radioactive waste materials which would create a disposal problem.

15.1 CONTAINMENT INTEGRITY OF THE SEALED SOURCE:

An important factor in protecting manufacturing staff from excessive exposure to the radioactive material is the containment integrity of the sealed source.

Each smoke ionization detector will contain two Am241 foils (N.R.D. foil A-001) in a Model A-1008b rivet). Each foil contains 0.5 microcuries of Am241. Drawings of the foil and rivet are attached. See Drawing number 891-1002, Exhibit 4.

The method of securing the rivet containing the Americium 241 foils is shown on the attached drawing number 782-5002, exhibit 5. The foil is enclosed in the N.R.D. #a-1008-B rivet type housing which has already undergone testing by N.R.D. and has proven the physical integrity of this assembly. The rivet assembly is inserted into the hole in the chamber end plate for sample or reference chamber, whichever the case might be, and the back side of the rivet is curled over the tooling shown on drawing number 782-5002, exhibit 5. The anvil is designed such that the staking force is distributed over the entire foil area to reduce the possibility of damaging the foil to the minimum. The staking tool will make a full curl on the rivet before it can come in contact with the foil containing portion of the rivet. Hence, the rivet is firmly affixed to the end plate.

The Am241 is in a solid form mixed with gold, and over-plated with gold. No significant degrading is expected of this physical and chemical form during the useful life of the device. A study was made of the containment integrity of similar foils employed in smoke detectors which had been in use for 5 to 14 years (RNL-TM-2684 Containment Integrity of 226 Ra and 241 Am Foils Employed in Smoke Detectors, R.G. Niemeyer). The conclusion of this study was that there were no aging effects observed which would indicate that the foils could not adequately contain the radioactive material, in normal use environments, for a period of about 50 years.

The Americium 241 is present as an impurity alloyed with solid gold. The two metals are mixed as powders by N.R.D., with the Americium as a very small fraction of the mixture. The gold-Americium powder mixture is sintered to produce a solid alloy in a bar form. This bar is then rolled down to a thin sheet until the activity per unit area is consistent with the source that we use. The sheet is then plated with a few micro inches of gold to insure that the Americium is contained. At this point the disks are punched out of the sheet which are then mounted in the A-1008B rivet holders.

Testing for solubility of the foils has been performed for N.R.D. These tests include solubility tests in saliva, solubility tests in water at 50 degrees Celsius, and solubility test in MEK at 50 degrees Celsius. The results of all of these tests confirm no significant solubility of the Am241 in water

or body fluids.

Listed below is a description of the quality assurance program including materials, dimensions, activity, contamination, composition and containment as they pertain to NRD Model A001 foil mounted in holder A1008b. (This information quoted from NRD.)

A. Quality Assurance - Materials

1. Raw materials used in the manufacture of the radioactive foil NRD Model A001 are certified to meet specifications. The materials involved are pure gold and silver, and of course the radioactive isotope Am 241. The precious metals are certified on their purity. The Am241 is purchased from Union Carbide ORNL, and each shipment is certified by ORNL on radiopurity. No radioactive impurities exist in the Am241 as supplied by ORNL. Checks are made at NRD on the alpha energy and the 59 KEV gamma peak.
2. Brass stud, Studs are closely specified on purchase orders and checks against specification on receipt at NRD. Flatness, inside diameter, wall height, and hardness are the prime specifications checked.

B. Dimensions

Quality assurance on this parameter of the NRD Model A001 (foil mounted in holder A1008b) is done in a quite practical method. We have two parts, radioactive foil, and brass stud, each part is produced by different manufacturers and by different methods. The extremely close tolerances specified on each part virtually precludes assembly if the parts vary from the specifications. The foil disc is punched on a precision die set and the brass stud is produced on a screw machine, and both operations are tolerated to the limits achievable. Random checks on foil discs are performed to evaluate tool life, and as stated in Item A, Number 2, dimensional checks are made on incoming brass studs.

C. Activity

While NRD does all the standard radioactive determinations on activity and these will be stated below, it should be noted that emission characteristics of the nuclear portion of this ionization type smoke detector are the base of the operation. The dual chamber detector operates as balanced ion chambers with matched ion currents. After careful prototyping with various contents (microcuries) and alpha energies (MeV) the producer together with the foil supplier set a specification. The most important specification of the detector manufacturer, is ion current, but because of the geometry of this detector the ion current must be produced by alphas of certain energy and of certain (content) intensity. Each detector manufactured is thus checked during function testing, to assure matched chambers and checked against smoke which does limit ion currents,

that is too high a matched ion current causes insensitivity to smoke, alternatively too low a matched ion current causes an increased sensitivity and a false alarm problem.

NRD checks activity in several ways, and the quality assurance program is begun as production control. The activity of the foil is calculated and specified to production as a specific activity which is based on the weight of the Am02 involved and overcoat thickness required. During production (rolling of linear foils) test punchings are made for verification against calculated values. These test punched discs are evaluated for content by means of gamma measurement based on the 59 KEV gamma peak. The same test pieces are then evaluated in terms of the alpha energy to confirm overcoat thickness. After determinations have been made on these two parameters, then final conformance to spec is checked on a sample lot for ion current. The NRD specifications on finished source assemblies NRD specifications on finished source assemblies are content +/- 10%, energy +/- 5% and ion current +/- 15%.

D. Contamination

Contamination control begins with receipt of Am241 from ORNL, and through our complete production of the foils, but I will deal with final assurance on sources and sources assemblies. The foil is punched into discs, and these discs are extensively cleaned to remove any particulate material released from the punching operation. They are then batched and given an immersion test, in a liquid which has been demonstrated to be effective in removal of surface radioactive deposits. No credit is taken for the batch size, but rather a limit of .001 microcuries is set on any batch. The determination of leakage is made by aliquoting the test solution and alpha counting the evaporated sample. Batch sizes vary but are normally 100 to 500 pieces. When this test has been completed, the foil discs are placed in the brass holder, and the holder is crimped (closed) against the circumference of the disc. A further contamination swipe test is performed 100% on multiple batches of the finished source assemblies. The test is simply a filter paper swipe over a multiple of approximately 100 to 200 finished assemblies. The filter paper is assayed for alpha activity and no credit is taken for batch size. The limit, again is .001 microcuries per wipe. A certification of this test accompanies each shipment, and it is certified rather than the immersion test, because it is a final test after all mechanical operations at NRD have been completed.

E. Composition

I believe composition has been adequately covered in the drawing A1008b, and in A, B, and C of the above.

F. Containment

The foil disc is crimped into a brass holder and is contained as described in Drawing A100 8. The crimping operation has been carefully tooled and controlled. It is important to maintain uniformity on the crimp to assure containment and to provide the proper exposed area required to produce the specified ion current. Each finished assembly is visually inspected, and a final contamination check is performed on each final assembly contamination performed on each final assembly contamination (see Item D). We have tested the containment of a mounted foil conforming to the drawing specification A100 8b. The test was made to determine the holding strength of the crimped holder. The test demonstrated that a force greater than fifty pounds applied against the reverse face of the foil disc would be required to dislodge the disc from it s crimped position.

We believe that the containment integrity of the subject sealed sources provides a high degree of safety for personnel and is consistent with the ALARA criteria in 10CFR20.

15.2 NORMAL CONDITIONS DOSE PROJECTION:

Further to the evaluation of the personnel safety we developed a normal conditions dose projection form the measured radiation levels of detectors. While the detector assembly area will be a restricted area the radiation levels to employees meet or exceed the criteria established in 10CFR20.105 for unrestricted areas.

The maximum radiation levels from a single unit are:

Contact	0.05 mR/hr
5 cm	0.011 mR/hr
25 cm	0.0014 mR/hr

Based on the above, it can be shown that the maximum exposure to one's hands when assembling the devices could not exceed 10 mR/year, based on the assumption that one holding the unit 10% of the working hours (4 hours per week for 50 weeks per year). The whole body exposure resulting from working around or living in the area of a single installed unit would be less than 5 mR/year even assembling one single installed unit would be less than 5 mR/year even assuming one was located 3 feet from a single unit for 24 hours per day, every day of the year. This is based on the radiation level at 25 cm (10 inches) being .005 mR/hr and the use of the inverse square law to calculate the radiation level at 36 inches to be .004 mR/hr.

We have also evaluated the exposure of individuals working around arrays of units being assembled or stored. The radiation level at one foot from an unshielded point source of 1 mCi of Am241 is 0.13 mR/hr., based on the 6CE rule and confirmed to within 10% using the condenser R-meter. It requires more than a total of 2000 units to contain a total of 1mCi of Am241. Due to the size and packaging of the detectors, the centerlines of the units will be 4 x 4 inches if stacked on their sides or at least 4 x 6 inches if stacked end to end. The 4 x 4 array produces the highest radiation level. The case where units are stacked behind other units results in less radiation due to increased shielding. The radiation level at three feet from the center point of 100 units stacked on side in 10 rows 10 high was calculated to be 0.0098 mR/hr. This calculation is very conservative as no shielding due to the housings was considered.

Taking the .0098 mR/hour figure and multiplying by 2080 hours (a forty hour week times 52 weeks) one gets a total integrated exposure of 0.02038 Rads. Using 1 Rad = 1 Rem this is less than one half of the exposure allowed in unrestricted areas per 10CFR20.105 and 0.4% of that allowed in 10CFR20.101.

Storage at the manufacturer's site will be under the supervision of a radiation safety officer who can insure that the storage area is away from the normally occupied areas and/or is adequately shielded. The case where the units are shipped, but not immediately installed, represents the highest potential exposure because proper storage in a shielded and/or nonoccupied area is not as easily controlled. If one assumes that the units are held at one site in temporary storage for three months and that storage is occupied for 10% of the working week at a weighted distance of three feet from an array of 100 units, then one can calculate the exposure to this person to be 0.5 mR. Even if the units remained for one year at the same site, the exposure would not be more than 2.0 mR (in actual fact, it would be somewhat lower since the effect of the shielding due to the unit itself has been neglected in the above calculations).

Our analysis of the projected radiation dose received by individuals who clean the smoke detector in accordance with our procedures would not exceed that projected dosage which would be received by an individual installing the device. It should be noted that during the cleaning procedure the person doing the cleaning is holding the detector in his hand for a relatively small proportion of the time. Consequently, do not feel that an individual cleaning the detector would receive an exposure to the hands greater than 1.8 mR/hour.

The organ dose, listed in Table 32.28 is unlikely to be exceeded during normal handling as a result of the direct radiation associated with this unit.

Significant increase in the radiation levels resulting from reduction in shielding is unlikely. This is based on the fact that radiation level measurements made on a bare foil are less than a factor of two times higher than the radiation levels used to calculate the time required to receive 5 mRem to the whole body of 75 mRem to the hands.

In order to exceed the limits set by column 2 of Table 32.28, one must increase the exposure times by 100. This requires a whole body exposure of 25,000 hours (over 2.5 years) at 25 centimeters, or holding a unit for 150,000 hours (more than 17 years). The exposure time requirements ensure that exposures in excess of Column 2 will not result from the direct radiation associated with the unit.

In evaluation of the dose commitment resulting from the intake of radioactive material by ingestion, use was made of the ICRP Committee II Report on permissible dose for internal radiation. The critical organ is the bone and the ingestion of one microcurie will result in a dose commitment of 0.830 Rem.

Personnel handling the units would be the group most likely to ingest the material. Under normal conditions, the contamination on the surface of a unit will not exceed 300 d/m, as each unit must be checked and meet this criteria prior to shipment. The maximum exposure under normal handling of a single unit would not exceed ingesting all of the maximum allowable contamination on the surface of a unit. This amount of activity (300 d/m) would result in a dose commitment of less than 0.12 mRem.

One must also consider that a unit may be opened up and the foil itself handled. The foils are sealed to the extent that a swipe test will not produce more than 0.005 microcuries. If all of this activity were ingested, it would result in a dose commitment of 4 mRem to the bone. Another possibility of exposure could result from disposal of the unit. The foil prototype tests included temperatures up to 600 degrees Celsius, impact tests and high pressure test. These tests would compare a placement of the unit in a fire, dropping the unit and crushing the unit. In all foil tests, the results indicate no significant release of contamination.

In order to exceed Column I of Table 32.28, one must ingest 0.018 microcuries of Am241. This would require ingestion of the amount of the maximum transferable activity present on over 36 units at time of shipment, or more than three times the allowable transferable activity on any single foil. It is extremely unlikely that either could happen.

In order to exceed Column II, one must ingest nearly two microcuries of Am 241. This requires ingestion of four times of the activity present in a foil, therefore being impossible.

The remaining possibility of personnel exposure is from airborne activity. Inhalation of one microcurie would result in a lung dose commitment of 63 Rem if activity is insoluble, or a bone dose commitment of 2085 Rem if air activity is soluble. The normal use, storage, distribution and disposal, there is no reason to expect air activity.

15.3 ABNORMAL CONDITIONS DOSE PROJECTIONS

The most likely possibility of releasing Am241 to become airborne would be as a result of a fire or explosion. In N.R.D.'s impact and high temperature tests of the foils less than 0.001% of the activity was released. In the O.R.N.L. tests, the average loss of activity for Am241 was 0.31% when the foils were subjected to an elevated temperature test according to the time-temperature curve of the Underwriter's Laboratory 1 hour fire test. In order to exceed Column III, one must inhale 0.007 uCi of a soluble form of Am 241. This is much more than the total loss from a single foil during the N.R.D. tests and represents nearly half the activity lost from a foil exposed to a 1 hour fire test. The probability of anyone inhaling this much Am241 is negligible since during a fire or explosion any activity released would be greatly diluted as a result of the air current set up by a fire or explosion. Also, during a fire, access to an area is limited and respiratory devices usually required because of smoke, lack of oxygen and heat.

The remaining possibilities to be considered is the case where the unit is damaged due to an accident such as an explosion and/or fire. As pointed out in our original application, N.R.D. performed both impact and high temperature tests of the foils and less than 0.001% of the activity was released. Foils similar to those to be used in these smoke detectors were tested by O.R.N.L. (ORNL-TM-2684 "Containment Integrity of Ra 226 and Am 241 Foils Employed in Smoke Detectors) and the average loss of activity from the foil for the Am241 was 0.31% when the foils were subjected to an elevated-temperature test according to the time-temperature curve of the Underwriter's Laboratories 1 hour fire test. While 0.31% of the activity escaped from the foil in this elevated-temperature test, only 0.002% of the activity was actually airborne; the remaining activity having deposited in the proximity of the foils being tested.

The ICRP Committee II Report on Permissible Dose for Internal Radiation was used to obtain assumption, constants and formulas to calculate the annual dose and life-time dose commitment due to either ingestion or inhalation of Am 241. In the case of ingestion, the critical organ is the "bone" and, in the case of inhalation, the critical organ is the lung for insoluble material and the bone for soluble material. The constants used to determine the dose commitment in each case were as follows:

	Bone	Lung
Physical half-life	1.7 x 10ex5 d	1.7x10ex5 d
	Biological	
half-life	2 x 10ex4 d	120 d
Effective half-life	1.8 x 10ex4 d	120 d
Fraction reaching organ	2.5 x 10ex-5 (ingestion) .063 (inhalation, soluble)	.125 (inhalation)
Mass of organ	7 x 10ex3 g	1 x 10ex3
Effective energy	57 MeV	57 MeV

By the use of the formulas presented in ICRP Committee II Report, one can calculate that the ingestion of 1 uCi of Am 241 will result in an exposure of 0.02R during the first year and fifty year dose commitment of 0.3R.

The inhalation of 1.0 uCi of insoluble Am241 results in an exposure of the lungs of 55R during the first year and a fifty year dose commitment of 63R. The inhalation of 1.0 uCi of soluble Am241 results in a dose to the bone of 47R the first and a fifty year dose commitment of 2085R.

The case where the most Am241 escapes the containment of the foil is the fire. In this case, an average of 0.31% of the activity (1.0 uCi) present in a unit escapes from the foil. This is a total of 3.1 x 10ex3 uCi. If all of this activity were ingested by one person, it would only result in a fifty year dose commitment of 1.2 mRem.

The amount of activity that become airborne is (0.002% of 1.0 uCi) 2.0 x 10ex5 uCi, based on the ORNL elevated-temperature tests and only half this much based on NRD foil tests. While the Am241 present in the foil is very non-soluble, one cannot conclude that it will remain in this chemical form during a fire. Since the soluble form results in the worst dose commitment, it has been assumed that all the activity that become airborne is of respirable size and in a chemical form that is soluble in body fluids. Since the smoke detectors are seldom placed within ten feet on a side (3 x 10ex7 cc).

The elevated-temperature test reached a temperature of 925 degrees Celsius in the ORNL test and 600 degrees Celsius in the NRD test. It is not possible for a person to be exposed at these temperatures unless special protective equipment including supplied air systems are available, however, ignoring the requirements for self-contained air system and ignoring any dilution of the air in the 10 foot cube, one can calculate that if one were exposed for a fifteen minute period and breathed the air without any cleaning system at a rate of 8 x 10ex5 cc/hour (four times average rate over 24 hour period), then one would inhale:

$$\frac{(2 \times 10^{-5})\ (1.0\ uCi)\ (.25 hour)\ (8 \times 10^{5}\ cc/hr)}{3 \times 10^{7}\ cc} =$$

1.3×10^{-7} uCi

The inhalation of 1.3×10^{-7} uCi of soluble Am241 results in a fifty year dose commitment of 12.7×10^{-4} Rem.

Since $2.085 \times 10^{3} \times 1.3 \times 10^{-7} = 2.71 \times 10^{-4}$.

EVALUATION OF LYMPH EXPOSURE

The inhalation of 1 uCi of Am241 has been considered for the case of an aerodynamic mass median diameter 0.2 u. In this case (per newer ICRP lung model; Health Physics Vol. 12, pp. 173 through 207), 40% of the material inhaled deposits in the pulmonary area. Fifteen percent of this will be eliminated via the lymphatic clearance and of this 6% (.15 x 40) 90% (5.4% of that inhaled) will be retained in the lymph nodes.

Based on $\frac{51.1\ CE}{M}$ where

C = .054 uCi
E = 57 MeV effective
M = 700 gm

One calculates the daily exposure rate to be 0.22 Rem/day.

The previous license application contained the assumption leading to a maximum inhalation of 1.1×10^{-6}. This results in a daily exposure rate to the lymph system of $0.22 \times 1.1 \times 10^{-6} = 2.4 \times 10^{-7}$ Rem/day, or an annual exposure of 0.09 mRem. The fifty year dose commitment would be 4.5 mRem.

A. The constants listed are:

	BONE
Physical half-life	1.7×10^{5} d
Biological half-life	2×10^{4} d
Effective half-life	1.8×10^{4} d
Fraction reaching organ	2.5×10^{-5} (ingestion) .063 (inhalation, soluble)
Mass of organ	7×10^{3} g
Effective energy	57 MeV

The biological half-life, effective half life and the effective energy are as follows:

Biological half-life	7.3×10^{4} d
Effective half-life	5.1×10^{4} d
Effective energy	283 MeV

Dose Commitment based on Inhalation of Soluble Am241:

1. Critical organ is the bone
2. Effective energy E (RBE)n = 283 MeV
3. Fraction reaching organ by inhalation = 0.063
4. Effective half-life 5.1 x 10ex4 d
5. Effective mass of organ 7 x 10ex3 grams
6. Effective radius of organ 5 cm
7. Fraction in organ of that in total body f2 = 0.71

NOTE: The effective energy includes a value of n=5 as recommended to make allowances for greater damage caused by certain radio-nuclides relative to Ra 226.

Calculations:

One can use the formula $\frac{51.1 \quad CE}{M}$ to calculate Rads per day, where:

C = activity present in critical organ (uCi)
E = energy in MeV per disintegration
M = mass of critical organ in grams

This formula is derived from:

To calculate Rem per day, replace E with E(RBE)n. Using this formula, one calculates the daily dose resulting from the inhalation of 1 uCi of soluble Am 241 as follows:

1. Activity reaching bone is .063 uCi
2. E (RBE)n = 383
3. M=7 x 10ex3 gm

$$\text{Rem/day} = \frac{51.1\ (.063)\ (283)}{7 \times 10\text{ex}3} = 1.3\text{x}10\text{ex}{-1}\ \text{Rem/day}$$

Due to the extremely long effective half-life, one can neglect decay and clearance during the first year resulting in the exposure during the first year of 365 x 1.3 x 10ex-1=47 Rem. The 50 year dose commitment is 2085 Rem (based on effective half-life of 5.1 x 10ex4 d).

INGESTION

The possibility of Am241 being ingested has been considered for personnel routinely handling the units (installing and/or cleaning units). In the case of routine handling and/or cleaning of the units, it has been assumed that an individual would not ingest more than 300 dpm of Am241. This assumption is based on the fact that

300 dpm is the maximum amount of smearable (removable) surface contamination allowable on any single unit at the time of shipment.

Since prototype testing of foils and completed units (including drop tests and Alconox cleaning) indicates excellent containment of the Am241, it is assumed that during routine handling (installing and/or cleaning) the unit's surface contamination will not exceed the 300 dpm.

Normal handling of a contaminated object routinely only transfers several percent of the "smearable" contamination from the object to one's hands. The amount of contamination actually ingested depends on many factors including personal hygiene, however, it is very unlikely that one will ingest more than a small fraction of the contamination present on the surface of a unit.

The possibility of ingestion has also been considered when a unit is physically opened (such as for field repairs), disposed of (such as compaction) or if the unit is involved in a fire. The foil tests have included impact, high temperature and immersion. Prototype testing has included smearing foils after routinely installed, after drop tests on the units, and after Alconox cleaning. In all of these test, the amount of activity released has not exceeded 0.001%. In all O.R.N.L. tests, the average loss of activity for Am241 foil was 0.31% when foils average loss of activity for Am241 foil was 0.31% when foils were subjected to an elevated temperature test according to the time-temperature curve of the Underwriter's Laboratory one hour fire test.

If one assumes a person would open a unit after a fire and that all the uncontained activity was still on the unit's surface, the amount of available activity is (0.0031) (1.0 microcuries) or 3.1 x 103x-3 microcuries. Of the 3.1 x 10ex-3 uCi available, it has been assumed that 10% is transferred to the hands and ingested (this is an extremely conservative estimate).

The bone is the critical organ for ingested Am241. The constants used to calculate the exposure are as follows:

Effective Energy	283 MeV
Mass of Organ	7 x 10ex3 gm
Fraction Reaching Organ	2.5 x 10ex-5

Using the formula $\frac{51.1C\ E}{M}$(effective = Rems/day

Where C is (3.1 x 10ex-4 uCi)(2.5x10ex-5)-7.75 x 10ex-9
E is 283 MeV (effective)
M is 7 x 10ex3 gm

One calculates the daily exposure resulting from the ingestion of 3.1 x 10ex-4 uCi of Am241 to be: 1.4 x 10ex-8 Rem/day or 5.1 x 10ex-6 Rem/yr.

Allowing for the effective half life of 5.1 x 10ex4 days, this results in a 50 year dose commitment of 2.3 x 10ex-4 Rem or 0.23 mRem.

Radiation Exposure Resulting From A Fire

A. In Firetek's letter dated January 17, 1985, the assumptions leading up to the inhalation of 1.1 x 10ex-6 uCi of Am 241 are presented. These assumptions are based on installed units. In an additional letter from Firetek (dated February 19, 1975), it is shown that the 50 year dose commitment to the lymph (critical organ) is 4.5 mRem.

B. In the case of installed units, one has a large dilution factor due to the spacing between individual units. The remaining case is a fire in a warehouse containing 100 stored units. The following assumptions have been made:

1. Warehouse size 20 feet high, 40 feet wide by 50 feet (11.2 x 10.2 cubic meters).
2. Once a fire reaches a hot enough temperature to result in significant release of activity, one must conclude a person will not remain in the area without protective devices including supplied air systems.
3. The amount of activity that becomes airborne is 0.002% of the amount of activity present. (This is based on the O.R.N.L. test and is a factor of 2 greater than NRD foil testing indicates)
4. The released activity is dispersed throughout the warehouse structure within 10 minutes and is further diluted by a factor of 5 within these same 10 minutes due to the air currents caused by the fire.
5. Personnel without supplied air enter the warehouse structure for 5 minutes (to make phone call to report fire, retrieve an item, or deactivate power, etc.). The area of the warehouse entered obviously cannot be in the actual fire area, as this would be fatal without heat resistant and/or supplied air devices. The airborne resistant and/or supplied air devices. The airborne activity in the area reentered is calculated as follows:

activity released=2 x 10ex-5 x 1.0 uCi x 100 units
=2.0 x 10ex-3 uCi
Dilution volume =11.2x 10ex2 cubic meter x .1(air current dilution)
or 1.12x 10ex2 cubic/meter effective 1.12x 10ex10cc

airborne activity at point of entry is:

$$\frac{2.0 \times 10^{-3}\ uCi}{1.2 \times 10^{10}\ cc} = 1.8 \times 10^{-13}\ uCi/cc$$

6. Breathing rate during such a reentry is assumed to be 1.3×10^{4} cc/min (4 times 24 average breathing rate).
7. Activity inhaled is 1.3×10^{4} cc/min x 5 min x 1.5×10^{-2} uC/cc or 9.75×10^{-8} uCi.
8. Dose commitment 1.1×10^{-6} uCi (see above) inhaled Am241 only results in 4.5 mRem dose commitment over a 50 year period. Thus, 9.75×10^{-8} uCi inhaled will only result in a 50 year dose commitment of 0.39 mRem.

15.4 WORK RULES:

Inasmuch as the potential for exposure of an employee can be minimized by forbidding any direct physical contact with the sealed sources the applicant has adopted the following work rules.

Work Rules

1. At no time shall any employee handle a source with his/her bare hands. Tweezers, specifically reserved for handling sources are to be used.

2. Should an accident occur and an assembly person touch a source he/she must report the incident to his/her supervisor and immediately wash his/her hands with hot soapy water. His/her hands will then be surveyed for any contamination.

3. Only tools specifically designated for use with the Americium sources are to be present at work.

4. Any Americium source which appears to be damaged immediately. Should such a source be discovered swipe tests of the work surfaces and tools which may have come in contact with the source will be performed to determine the presence of any removable activity.

5. Removable activity shall mean 100 counts above back ground on the SAC-4, using the Alpha window probe.

6. Any loss or suspicion of loss of a source must be report to the RSO immediately. Work will be suspended while a diligent search is conducted, until the source is found or it is determined that the suspicion of a loss was not justified.

7. Subsequent to working in the production area all employees must thoroughly wash with hot soapy water, especially prior to eating. This includes brief interruptions for coffee breaks or lunch.

8. During the first week of each month the alpha scintillation counter and the survey meter will be calibrated. The work surfaces and production tooling will be swipe tested for removable activity. A memorandum documenting the results of these tests will be issued to the CEO.

Failure to comply with these work rules will be deemed as necessary and sufficient grounds for punitive action including permanent dismissal of the offending employee.

_____ _____
(employee signature) (date)

_____
(employee name)

The intent of these work rules is to obviate any direct physical contact with the Am241 containing foil sources by employees. This reduces the likelihood of accidental ingestion of activity from a leaking source.

In addition, each employee is warned of the potential risk associated with handling Am241 sources. The warning is set forth on the following page.

NRC EMPLOYEE WARNING

The manufacture of ionization type smoke detectors involves the use of small quantities of Americium 241, a radioactive element similar to Uranium. The Americium 241 that is used here is used in sealed sources which are specifically designed for use in smoke detectors. These sources are manufactured under a licence issued by the USNRC as is our operation utilizing these sources.

The Americium sealed sources that we use are Alpha emitters. Alpha radiation travels approximately one inch in air. This is little if any practical risk in associated with being in the same room as the sources. As long as the integrity of the source has not been compromised there is no danger associated with being involved in the manufacturing process. However, if the Americium is ingested (eaten), either as a whole source or as activity which has leaked out of a damaged source, and incorporated into body tissues it can cause serious health problems, including increased risk of certain cancers. Under those conditions the Americium 241 source material is in intimate contact with body tissues and the emitted alpha particles will damage the cells in those tissues.

Therefore:
*Do not touch any manufacturing work surfaces, tools or detector components until you have been thoroughly briefed on the work rules that pertain to this facility,
*Do not eat any object that has been in the production portion of this building,
*You must wash thoroughly with hot water and soap after your visit and prior to eating anything,
*If you suspect that you may have come in contact with any source material we have survey equipment here to determine whether there is any activity present on your body.

15.5 ASSEMBLY PROCESS:

The packaging in which the sources are shipping will be surveyed for activity and swipe tested for removable activity as the shipment is unpackaged. If removable activity in excess of 100 counts per minute is discovered on any of the packaging the vendor will be immediately notified that the shipment is being rejected due to uncontained activity in the packaging materials. It will then be returned to NRD per their shipping instructions.

Only after all of the packaging has been tested for removable activity will the sources be deemed received and placed in the special, sequestered inventory location, A.

Only those sources that are to be used that day will be removed from the secure inventory. The quantity of sources placed into production will be recorded by the production manager. All sources shall be accounted for on a daily basis to assure that none are lost. Any sources that even appear damaged shall be returned to the vendor for credit.

The Am241 sealed sources are staked on to the smoke detector chamber with a hand operated arbor press. The sources can be easily manipulated with tweezers. Consequently, there is little incentive to touch the source with one's hands. A swipe will be performed on each source in groups of ten sources per swipe. A count of 100 counts per minute above background is the pass/fail criterion. If the swipe (which is the sum of the removable activity of 10 sources) shows more than 100 cpm all of the sources in that group will be individually swipe tested to determine which is the leaking source. We should note that in all of the sources that Firetek processed none were ever found to be leaking.

Each month the tooling that is used in the arbor press and all assembly tables will be swipe tested for removable activity. If removable activity is found in excess of 100 cpm the tooling will be cleaned and the sources which had been most recently staked will be checked again for removable activity.

Subsequent to final assembly the detectors will be swipe tested for removable activity prior to packaging. The procedure will be to use a single swipe paper and swipe all of the detectors in a batch (usually 50 units) and perform a single count on the swipe paper. The pass/fail criteria shall be 100 cpm over background. If the count is higher than 100 cpm over background then each detector will be individually swipe tested for removable activity. That detector which yields the high removable activity will be disassembled and the sources will be returned to the vendor.

15.6 SUMMARY

It is the opinion of the applicant that with the relatively low quantities of Americium present in the sources, the excellent record of activity containment of the NRD sources, the operational history at Firetek and the radiation safety procedures established by the applicant for its assembly operation that personnel monitoring offers little if any return for the expenditure of funds necessary to implement it.

However, as a new licensee we will be purchasing a quarterly film badge personnel monitoring program from Landauer as soon as we are licensed so we can verify that none of our personnel have been exposed to unacceptable amount of radiation.

In addition, we will conduct monthly checks of our facility, in the form of swipe tests of the assembly stations and tooling. We will also conduct monthly radiation safety courses to remind our staff of the work rules, discuss general safety and any other radiation related topics.

The applicant submits that the manufacturing plan outlines herein fulfills the ALARA criteria of 10CFR20.

17. The resumes for Mr. Lussier and Mr. Cholin follow as sections 17.1 and 17.2 respectively.

It should be noted that Mr. Cholin has been a member of the Firetek engineering and manufacturing staff since 1982. He has been involved in a very intimate manner in every aspect of radiation safety regarding the Firetek product lines that we wish to produce. Mr. Cholin also took a nuclear engineering course in college.

Lawrence D. Lussier
17 Molleur View Drive
Beacon Falls, CT. 06403

Date of Birth: May 16, 1950
Phone: 881-1123

RESUME

FAMILY

- Married in 1980 to Colleen J. Harrington. Colleen is employed as hospital care co-ordinator for Urological Associates of Bridgeport where she has worked since 1978. Colleen is a registered Medical Radiographer (R.T.) and is a member of the Beacon Falls Junior Woman's Club and the Friends of Beacon Falls Library. We have two children, Rebecca Marie, age 6, and Douglas Patrick, age 3. Both were born on April 24. Rebecca will be entering first grade at Laurel Ledge School in September. Douglas will be attending nursery school at United Day School. We are members of St. Michael's parish.

EDUCATION

- 1976-1982 — Marist College, Poughkeepsie, New York , MBA Accounting/ Finance Degree 3.82 GPA
- 1968-1972 — Rensselaer Polytechnic Institute, Troy, New York, B.S. Management , 2 years background Electrical/ Mechanical Engineering

MILITARY EXPERIENCE

- 1972-1975 — Fire Control Technician , USS McCandless DE1084 Norfolk, Virginia. Attained rank of second class petty officer.

WORK EXPERIENCE

- 1987-present — President of Combined Technical Services, Inc.
  This firm is active in the design, engineering, sales, installation and servicing of specialized fire protection systems Full time firm since Sept. 1987 to present. Firm was incorporated in December 1984. Members of Fire Suppression Systems Association since 1988, member of NFPA since 1989, member of American Fire Sprinkler Association since 1990. Liason Committee Chairman for the FSSA since Jan. 1990.
- 1986-1987 — Vice President Rael Fire Systems, Inc. , Lynbrook, NY
  Responsible for design, engineering , sales and servicing of halon 1301 fire suppression systems.

- 1983-1991 Police Officer-Beacon Falls Police Department. Completed state mandated Police Officer training May 1989. Graduated 1st in a class of 80. Responsible for all scheduling, private duty and file maintenance.
- 1981-1986 Manager of Engineered Systems Division for Watchguard Inc. and National Guardian Corporation (acquired Watchguard in June of 1983)
- 1975-1981 Manager of Application Engineering for Simplex Time Recorder out of Poughkeepsie, New York branch (1975-1977), Bridgeport, CT, (1977-1980), Hartford, CT regional office (1980-1981)

ASSOCIATION AFFILIATIONS

- Fire Suppression Systems Association (FSSA)
  - Charter member in 1982 with Watchguard, Inc.
  - Member from 1988 to present with Combined Technical Services, Inc. I am an active member in this organization and am the Chairman of the Liason Committee.
- National Fire Protection Association (NFPA)
  - Member since 1988
- American Fire Sprinkler Association (AFSA)
  - Member since 1990
- Society of Fire Protection Engineers (SFPE)
  - Chapter member of Hartford/ Springfield chapter and have applied for associate membership.
- License pending for master fire protection in New York City

PERSONAL INTERESTS

- Knights of Columbus
  - Member since 1975
- American Legion
  - Member since 1990

Jeffrey G. Cholin
36 Park Drive
Chappaqua, New York 10514
Home: 914-238-8464

EXPERIENCE:

Firetek Corp., Hawthorne, N.J.-- Manufacturer of high performance fire detection and control equipment.

Positions:

11/88 to present: Vice President Manufacturing and Engineering Departments. Retained all previous duties plus training and supervision of new purchasing agents and production managers

3/87 to 11/88: Vice President Engineering Department. Responsible for keeping projects on time, and on budget. Responsible for the department budget, policing the corporate quality assurance program and engineering policies.

1/87 to 3/87: Senior Engineer. Responsible for the quality assurance program, improved documentation, standards for new products, technical seminars. Provide technical support for Marketing, and Purchasing and trained the new Production Manager.

9/86 to 1/87: Production Manager. Responsible for 22 production workers and technicians. Conceived and established a computerized order decomposition system to organize production priorities. Created assembly and testing procedures for the product line where there were none before. Reduced inventory by nearly 10%.

1/86 to 9/86: Project Engineer. Managed the F(t)10 project, a large modular control panel to provide fire protection. Provided technical support to production and our customers, presented technical seminars.

3/84 to 1/86: Staff Engineer. Major participant in several of the company's important research and design projects.

- F(t)10 project
- 2160 resubmission
- 4400 project
- Navsea Project

7/82 to 3/84: Junior Engineer. Performed traditional tasks of a junior engineer including drafting, experiments, constructing, trouble-shooting and evaluating prototypes. Also responsible for the implementation of a computerized inventory control system purchased from the ADP corporation. Responsible for generating and organizing all the bills of materials, reorganizing the part numbers, acted as liaison between Firetek and ADP, including training in house staff and resolving several functional problems.

PERSONAL:

Age: 30
Single

EDUCATION:

Bucknell University
BSEE 1982

References Furnished upon Request

(B)
Distribution License

The applicant request a license to distribute the subject smoke detectors identified as the Model 216Q, the Model 218Q and the Model 228Q (formerly the *Firetek* Model 3Q3-216Q, 313-218Q and 312-228Q, respectively) per 1Q CFR 32, free of further regulatory control.

1. Radiation Safety Analysis

The constructional integrity of the *Advanced Detection Technologies* Model 216Q, 218Q and 228Q Ionization Smoke Detectors was evaluated by the U.S.N.R.C. for the *FIRETEK* Corporation as part of the licensing process for license 29-15775-3 and 29-15775-Q2E. *Advanced Detection Technologies* has purchased the patent, design, engineering, inventory and manufacturing tooling for this product and will be manufacturing these products, unchanged. The applicant therefore does not deem a second constructional integrity and radiation safety evaluation by the U.S.N.R.C. as necessary.

The Model 216Q detector uses a chamber geometry which as been evaluated by the USNRC and found to provide acceptable containment. The Am241 source is contained in the NRD a-1QQ8-B rivet holder. This assembly is staked into the chamber endplate as shown in applicants drawing #782-5QQ2, Exhibit 3. The endplate is riveted to a chamber wall thereby forming a deep cup. Both the chamber endplate and the chamber wall are fabricated from SAE 3Q3Q3 stainless steel. The completed chamber is then riveted onto the detector circuit board which is an FR4 epoxy/glass laminate. Consequently the Am241 containing source is completely enclosed in stainless steel and fiber glass. See drawing 52Q-14Q9, Exhibit 6 and 52Q-1414, Exhibit 7.

The circuit board/chambers subassembly is then mounted in a detector "base" which is molded of a melamine, thermoset resin. An aluminum shell is then placed over the circuit board/chamber assembly and secured with Allen Screws and a proprietary binding washer. This assembly, shown in drawing #52Q-14Q9, Exhibit 6, provides a second layer of containment which will withstand both normal and abnormal conditions without a reasonable likelihood of loss of source containment.

The Models 218Q and 228Q detectors use the exact same chamber design as that in the 216Q. The source rivet is staked to the same endplate. The endplate is then riveted to the circuit board which is also made of FR4 epoxy/fiberglass laminate. While the electronic circuitry on the circuit board is different, the method of source containment in the Model 218Q and 228Q detectors is the same as its predecessor, the Model 216Q.

The circuit board/chambers subassembly is inserted into a detector base which is molded of a Noryl-3QQ thermoplastic resin, a UL recognized material. The base design is significantly different

from the base used for the 2160 in that it is far less expensive to manufacture and provides for a superior mechanical connection between the detector and the socket into which it plugs.

Once the circuit board/chambers subassembly is riveted into the detector base a Noryl-300 thermoplastic shell is placed over the chambers and snapped onto the detector base. This is shown in drawing #520-1414, Exhibit 7. This completes the second layer of containment of the Am241 containing sources. The snap fit between the detector shell and base is designed so that one must use a special tool to simultaneously release the three (3) locking tabs in order to remove the shell. This tool must be able to simultaneously apply approximately 15 lbs. of force at three (3) separate locations around the perimeter of the detector to force the shell to assume a roughly triangular shape, thus releasing the engagement of the locking tabs.

In all three detector designs one must use either a special or uncommon tool to remove the outer shell of the detector. In most cases the disassembly requires destructive force. Even if an unauthorized person were to be successful in removing the detector shell, he would then have to use some form of cutting tool, capable of cutting sheet stainless steel or steel rivets, to gain access to the Am241 containing source. Then such a person would have to intentionally breach the containment integrity of the NRD sealed source. This is not a series of events that is apt to occur by accident.

Additionally, all detectors are designed to be wired into a supervised system. The removal of a detector causes a trouble signal to sound at the host control panel.

The radiation safety analysis in the material offered in support of the application for possession shows that the exposure to persons working in close proximity to large quantities of detectors is below that which would require restricted access (although access will be restricted as a matter of policy). Under normal circumstances these detectors are installed on the ceilings of data centers which are sparsely occupied. The radiation dose that personnel could accumulate due to the presence of installed detectors is well below one's ability to measure, well below that of a person working on detectors and does not constitute a realistic risk factor.

In the materials provided in support of the application for a Licence to Possess radioactive materials abnormal conditions dose projections were also considered. These abnormal conditions are also germane to the consideration of the likelihood and severity of exposure from installed detectors. While it should not be necessary to repeat the analysis here, it can be noted that even under abnormal conditions the benefit of the smoke detector far out weighs the risk of radiation exposure.

2. Notice to Purchasers

These three (3) smoke detectors are designed to be part of a supervised system which is comprised of many detectors. The overwhelming majority of the applications will be in data processing environments, switch gear and industrial control environments, etc. These devices are not intended for domestic application nor are they operable with a built in battery, they must be wired into a system. Consequently, the purchaser and the ultimate end user can be considered a knowledgeable individual with a technical background.

The detector labels are shown in drawing #831-1012, Exhibit 8 for the 2160, #831-1036, Exhibit 13 for the 2180 and #831-1037, Exhibit 13 for the 2280. It is located on the end of the detector which plugs into the receptacle (socket) as shown. This label complies with the requirement of the germane USNRC, UL and FM requirements.

The detector is shipped with an information bulletin which is controlled with part #782-2160, #782-2180 and #782-2280. This bulletin is packaged with each detector per the requirements of UL and FM. A copy of this bulletin is attached to this application, Exhibit .

Because these detectors are sold to companies that are specialty construction contractors the point of sale package is not part of the product advertising. In addition, these detectors are usually sold in bulk quantities, in a common cardboard carton. Consequently, in order to satisfy the intent of 10 CFR 32 the applicant will use similar packaging to that of *FIRETEK*. We will enclose each detector in a polyethylene bag with the required notice printed on a bag closure label. That notice will read:

> "This detector contains radioactive material (1.0 microcuries of Americium 241) and has been manufactured in compliance with U.S.N.R.C. safety criteria in 10 CFR 32.27. The purchaser is exempt from any regulatory requirement."

A sample of this bag closure label is attached as Exhibit 12.

3. Quantity and Extent of Distribution

The applicant anticipates annual sales of between 2000 and 3000 units per year. The majority of these units will be placed into existing installations as replacement for detectors that have failed electronically and must be replaced. These installations are located across the United States, including small quantities in Alaska. At 1.0 microcuries of Am241 per unit this constitutes an anticipated annual distribution of less than 3.0 millicuries per year.

The applicant will request its customers to return any detectors removed from service to the applicant for disposal. Those detectors that are returned will be disassembled, the sources will be removed and the removed sources will be shipped back to NRD for disposal or reprocessing which ever NRD deems appropriate.

OFFICE AREA

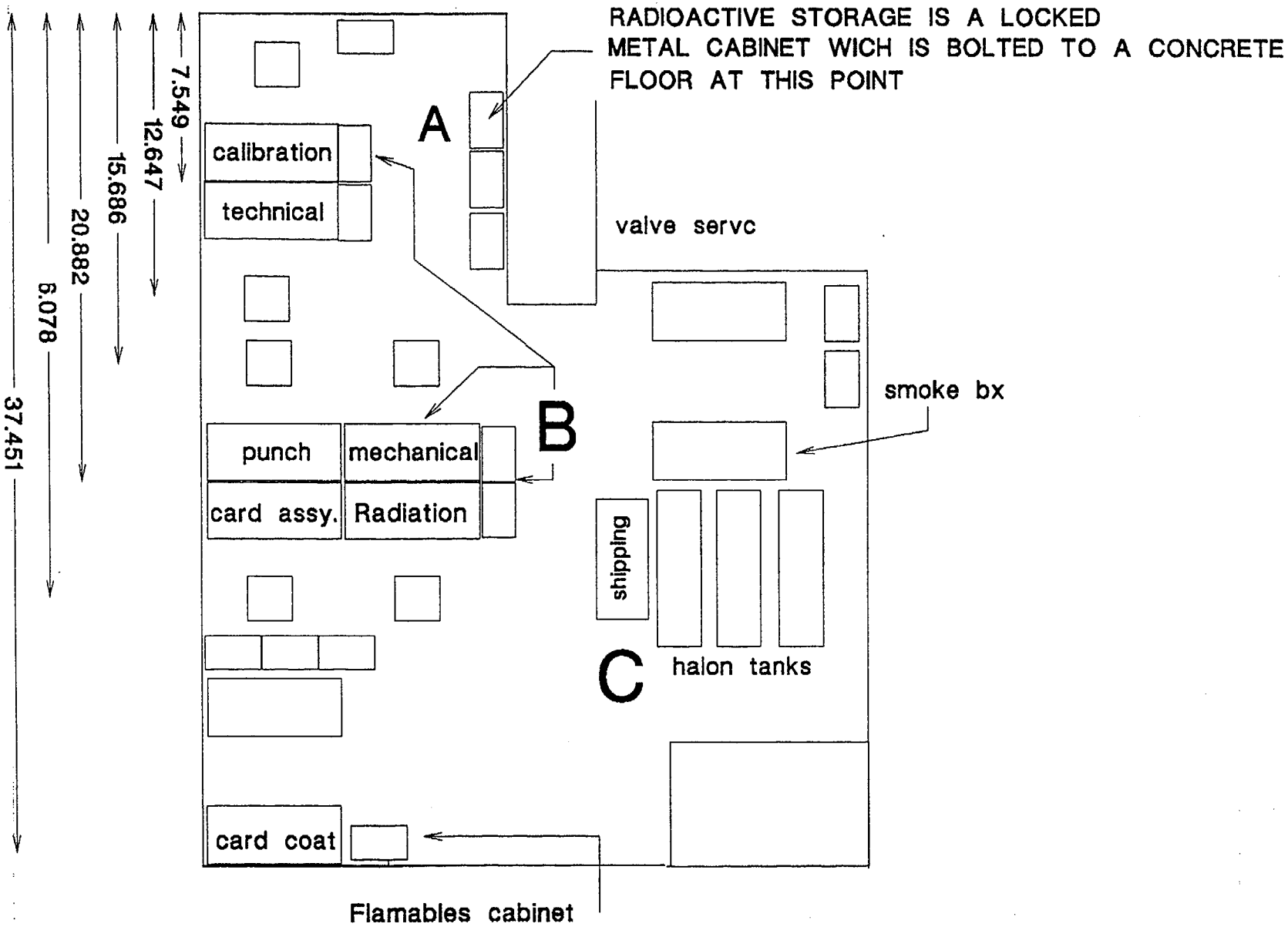

EXHIBIT I

EXHIBIT #2

ADT786-1107

-END OF MONTH FACILITY REPORT-

I. PRELIMINARY:

DATE:_____ TECHNICIAN:_____

LAST S.A.C.-4 CALIBRATION:_____

CALIBRATION VERIFIED PRIOR TO FACILITY CHECK:

( )YES ( )NO

==========

II. FACILITY SWIPE:

MAXIMUM ALLOWABLE LEVEL IS 80 COUNTS OVER BACKGROUND:

_____ + 80 = _____

BACKGROUND MAXIMUM LEVEL

1. Swipe each assembly table listed below for removable radiation, also swipe each detector assembly on the table at the same time. Count for one minute and log the result below. IF ANY TABLE YIELDS A COUNT ABOVE THE MAXIMUM LEVEL -----STOP-----, GET A SUPERVISOR AND DO NOT PROCEDE.

Calibration:_____ Card Assy.:_____

Technical:_____ Touch-up:_____

Punch:_____ Radiation:_____

Mechanical:_____ Coat & Solder:_____

Smoke Box:_____ Shipping:_____

ALL BENCHES SWIPE NEGATIVE FOR REMOVABLE RADIATION:

( )YES ( )NO

TECHNICIAN'S SIGNATURE:_____

II. RADIOACTIVE MATERIAL INVENTORY:

MAXIMIUM ALLOWED QUANTITY OF SOURCES IS 4000 PCS.,

WE ARE: ( )OVER ( )UNDER

III. RADIATION SAFETY SEMINAR:

Covered material:

1. Operation of the detector.
2. What is Am241.
3. How can Am241 harm a person.
4. Work rules: ( )1 ( )2 ( )3 ( )4 ( )5
5. Wash thouroughly

Attendees:

_____

_____

_____

_____

_____

_____

_____

ADT786-1108

CALIBRATION MEMO

I. PRELIMINARY:

DATE:_____ TECHNICIAN:_____

INSTRUMENT:_____

PREVIOUS CALIBRATION DATE:_____

==========

II. CALIBRATION FOR EBERLINE S.A.C.-4.

1. Run five (5) one (1) minute background counts and record results:

   1._____ 2._____ 3._____ 4._____ 5._____

2. Run five (5) one (1) minute counts with the 1160 DPM source in the sample drawer and record the results:

   1._____ 2._____ 3._____ 4._____ 5._____

3. The instrument is calibrated if:
   average background + 471 = 1160 dpm average +/-10%

   _____ + 471 = _____
   average background average 1160 count
   Calibrated ( ) YES Go to step5, but do not repeat steps 1 and 2.
   ( ) NO Procede to step 4.

4. If the instrument is not calibrated, adjust the voltage to the P.M. tube until the above equation is satisfied.

5. Repeat steps 1 and 2 and record the averages below

BACKGROUND AVERAGE:_____

1160 DPM AVERAGE:_____

MAXIMUM LEVEL:_____ (BCKGRND AVRG + 80)

6. Label the instrument with the following items:

Name	Date
Background ave.	1160 dpm ave.
maximum level	

==========

III. EU-120 Calibration:

1. warm up the instrument for five (5) minutes.
2. Run a background count with the meter head 1/2 inches from a table surface with wax paper. log the result:

   _____

3. Place the 1160 dpm source on the wax paper and run a count with the meter head 1/2 inches from the source. log the result:

   _____

4. If the count with the 1160 dpm source is 471 counts + the background +/- 100 cpm then the meter is calibrated. Label the meter with name, date, B.G. and 1160 source response.

ADT786-1106, Swipe-test Form

SWIPE-TEST REPORT FORM

I. PRELIMINARY INFORMATION:

DATE:_____ TECHNICIAN:_____

Check here if this is a second page: ( ) SIGNATURE:_____

S.A.C.-4 LAST CALIBRATION DATE:_____

==========

II. CALIBRATION VERIFICATION:

All counts are for 60 seconds.

BACKGROUND RATE:	COUNT WITH 1160 DPM SOURCE:
TRIAL 1:_____	TRIAL 1:_____
TRIAL 2:_____	TRIAL 2:_____
TRIAL 3:_____	TRIAL 3:_____
TRIAL 4:_____	TRIAL 4:_____
TRIAL 5:_____	TRIAL 5:_____
AVERAGE:_____	AVERAGE:_____

BACKGROUND AVERAGE +471 COUNTS= 1160 DPM AVERAGE +/-10%

YES ( ) THE INSTRUMENT IS CALIBRATED.

NO ( ) THE INSTRUMENT IS NOT CALIBRATED.

If the instrument is not calibrated calibrate it prior to proceding and file a new calibration report.

==========

III. SWIPE TESTING:

MAXIMUM ALLOWED LEVEL IS BACKGROUND AVERAGE + 80 COUNTS PER MINUTE:

AVERAGE:_____ + 80 = _____COUNTS/MINUTE

IF AT ANY TIME THE SWIPE COUNT IS ABOVE THIS LEVEL, STOP AND GET THE SUPERVISOR, DONOT PROCEDE.

SWIPE EVERY TENTH SOURD AFTER STAKING IT ONTO THE CHAMBER END PLATE. SWIPE THE TOOL, THE ANVIL AND THE TWEEZERS AT THE SAME TIME, RECORD THE RESULT OF THE 1 MINUTE COUNTS:

10th SOURCE:_____	20th SOURCE:_____
30th SOURCE:_____	40th SOURCE:_____
50th SOURCE:_____	60th SOURCE:_____
70th SOURCE:_____	80th SOURCE:_____
90th SOURCE:_____	100th SOURCE:_____

For additional sources, attach the same form behind and transfer information in block 1 to the second sheet.

OVERSIZE DOCUMENT PAGE PULLED

SEE APERTURE CARDS

NUMBER OF OVERSIZE PAGES FILMED ON APERTURE CARDS 5

9210300193-01-05

APERTURE CARD/HARD COPY AVAILABLE FROM

RECORDS AND REPORTS MANAGEMENT BRANCH

EXHIBIT # 8

303 - 2160 DETECTOR LABEL

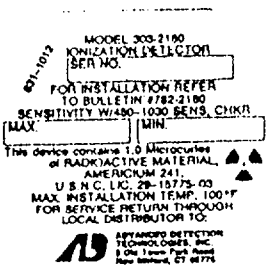

WE HAVE NOT HAD THE ARTWORK FOR THE -2161, -2165, AND -2166 VERSIONS MADE UP YET. THEY WILL ONLY VARY IN PART # FROM THIS LABEL.

Advanced Detection Technology, Inc

EXHIBIT 9

2160 IONIZATION SMOKE DETECTOR BULLETIN

303-2160 Standard Detector
303-2161 Above with R.S.
303-2165 Standard with 5 second Qualification Delay
303-2166 Above with R.S.

DESCRIPTION: Model 303-2160
The Model 303-2160 is a dual chamber, nominal 24-volt device using the ionization principal to sense both visible smoke and invisible particles of combustion.

The inner or reference chamber enables the detector to adjust to normal changes in humidity, temperature and pressure. The outer chamber measures the presence of smoke or invisible combustion products.

The 100% solid state circuit achieves singular stability by means of three stages:

The first stage is a junction FET which senses the change in voltage which results when combustion products enter the outer chamber.

The second stage is essentially a voltage comparator which screens out minor fluctuations in the output of the first stage and amplifies only the signals which satisfy its level requirements.

The third stage is a timer. It requires that the second stage output signal be present for a nominal 500 milliseconds before locking the detector into alarm.

SPECIFICATIONS:
The detector plugs into a common socket, 303-9010, which may accept thermal detectors as well. Its bright red-lensed lamp is rated .14 average MSCP (Mean Spherical Candle Power) so that brightness helps in locating the alarm point quickly.

The common socket permits wiring to an individual remote signal lamp from the remote alarm light terminal (3) without wires returning to the control panel or to a system graphic annunciator. It may also house the End of Line Device Model 303-9120. A detector retaining set-screw is provided in the socket to discourage unauthorized detachment of detector. A special ball-ended hex driver (450-2100) is required to turn the set-screw.

The common socket can be mounted on any standard 4" octagon or round wiring box and is so dimensioned that it provides its own plastic ceiling trim. It can also be mounted on a 4" square wiring box using a plaster ring or on a "Wiremold" box. The socket can accommodate wire from No. 18 to No. 12 AWG terminated with either fork or ring lugs. Wherever local codes permit, limited energy shielded cable may also be used. It should be noted that as the detector is plugged into the common socket, the metallic outer shell establishes contact with the bonding wire via terminal No. 6, providing an electrostatic shield around the ionization chamber. A ground conductor, included with the other wires form the control panel should be bonded to both screw terminal #6 and the wiring box. This ground conductor should not be the cable shield or shield drain wire. In areas with limited headroom or other considerations, it may be necessary to mount the detectors in a recessed detector housing.

Standard detector Mounting

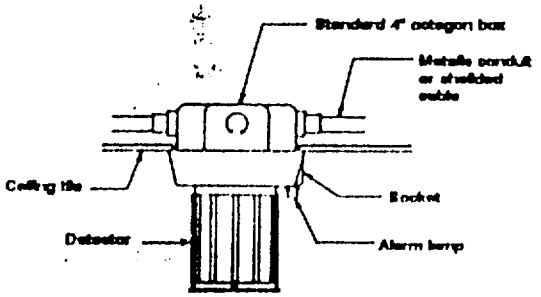

Recessed detector mounting
with recessed detector mounting kit 300-1001

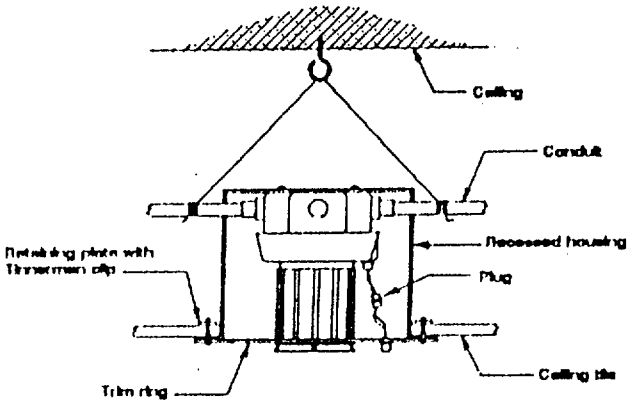

Temperature:
Variable Operational Ambients
32 F (0 C) to 120 F (49 C)
0 F (-17.8 C) to 150 F (66 C) rapid cycle
Variable Storage Ambients
-20 F (-30 C) to 158 F (70 C)

Humidity:
85 +/- 5% at 86 +/-4 F (30+/-2 C)

Air Velocity:
0-300 +/- 25 feet per minute

Barometric Pressure:
10 cycles of 2 inch mercury change
31 to 29 inches Hg (787mm to 737mm Hg)

Corrosive Atmospheres:
0.1% H2S (Hydrogen Sulphide) in air saturated with water for 10 days.
1.0% CO2 (Carbon Dioxide) and 0.5% SO2 (Sulphur Dioxide) in air saturated with water for 10 days.

6. Static Discharge
10 KV to shell

Voltage:
Nominal 24 volts, D.C. regulated filtered, full wave rectified as supplied by FIRETEK control panels such as System 240, 624 and 210.

Current:
Standby - Nominal 1.0mA at 24VDC

Alarm:
Nominal 90 mA (socket lamp only) 110 mA with socket lamp and 2 accessories.

Qualification Timer:
2160/2161.....1/2 second
2165/2166.....5 second

Radioactive content:
1.0 microcuries of Americium 241 are used in each detector--distributed in two sealed sources- one in the sample (outer) chamber and one in the reference (inner) chamber. These detectors are manufactured and distributed under licensing of the U.S.N.R.C., free of further regulatory control.

5 Old Town Park Rd. · South End Plaza · Unit 28 · New Milford, CT 06776

APPLICATION:
Underwriters' Laboratories, Inc. does not list a specific spacing for Ionization detectors. The detectors are fire tested at minimum sensitivity per U.L. Standard268. N.F.P.A. Standard 72E list spacing up to 900 sq. ft. This, however should be listed only as a maximum limitation guide. Beams and other ceiling obstructions should be considered both as to spacing away of the detector and their effect of subdividing the area. Air movements, air conditioning supply, and return registers must be considered both as to the number of detectors required and their locations. NFPA Bulletin No. 72E should be consulted for specific guidelines.

The authority having jurisdiction over special hazards such as computer rooms and other such installations may require spacings of 250 square feet or less due to high air exchange rates or exceptional fire risk. Particle detection equipment, actual test fires and engineering analysis may be necessary to determine the optimum quantity and location of detectors.

The detector has been designed for installation on the top surface of the hazard area (such as the ceiling of a room) when in still air environments.

Under these conditions the Aerodynamics of thedetector body serve to funnel smoke into the sample chamber as a smoke plumeexpands along a ceiling. The long body of the detector allows it to protrude down out of the boundary layer that forms right at the ceiling. For this reason recessed detector housing will reduce the detector's performance.In other environments the air movement patterns must be considered when establishing the location and servicing of the detectors. In areas with high air flows, dust and dirt will accumulate in the detector more rapidly; Increased maintenance must be performed and an air attenuator 303-1000 should be added.

The 303-2160 has been tested by Underwriters' Laboratories, Inc. for environmental stability in accordance with standards UL 268. Some of the basic conditions that must be met for compliance are listed above and are presented to help serve as application guidelines. In all cases a ADVANCED DETECTION TECHNOLOGIES technical representative should be consulted if the detectors are to be operated under adverse environmental conditions.

SENSITIVITY:
The sensitivity of the detector is field adjustable and tested with the ADVANCED DETECTION TECHNOLOGIES 460-1030 Sensitivity Checker. The limits on the sensitivity adjustment angle are set at the factory. The maximum sensitivity reading is 200 units +/- 10% and corresponds to an approximate .6% per foot obscuration in the UL 268 smoke chamber. The minimum sensitivity setting is 300 units +/- 10% which corresponds approximately to a 1.0% per foot obscuration. To adjust the sensitivity one inserts the adjustment tool, 460-2010, into theadjustment screw driver slot and rotate clockwise to decrease the sensitivity and counter-clockwise to increase it. Do not use metal screw drivers as they tend to chew up the adjustment potentiometer.

The sensitivity is checked as follows:

1. Turn on the 460-1030 Sensitivity Checker.
2. Push the mode switch of the Sensitivity Checker to "reset".
3. Insert the Sensitivity Checker probe into the jacks in the end of the detector.
4. Push the mode switch on the Sensitivity Checker back up to"reset" and then immediately down to "test".
5. The Sensitivity Checker should display the detectors sensitivity in less than 45 seconds.

To repeat, switch the mode switch of the Sensitivity Checker to standby and rotate the detector out of the socket for a moment. Then rotate the detector back into the socket and wait 15 seconds before repeating the test.

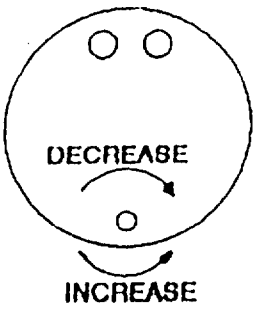

MAINTENANCE:
The fire detection system must be maintained in order to work properly. ADVANCED DETECTION TECHNOLOGIES recommends that the detectors be serviced at least annually - more frequently where conditions dictate or where the detection releases extinguishing agents. The maintenance of the detector involves the check of sensitivity and adjustment or cleaning. Normalcleaning involves the removal of the detector from the socket.

Take a soft brush to remove accumulated dust from the outer shell. It is advisable to blow gently with compressed air or nitrogen to clean off the internal surfaces.

This cleaning procedure should be sufficient for the majority of applications.

In extreme conditions a more thorough cleaning may be necessary, especially if upon inspection, the chamber endplate is still dirty and the dirt clings to the inner surfaces of the detector, the factory should be consulted for specific recommendations.

Every maintenance operation should end with a sensitivity check with the detector in its actual operating location and with all air movement as normal.

A permanent record of the maintenance procedures and sensitivity checker readingd should be kept at the job site.

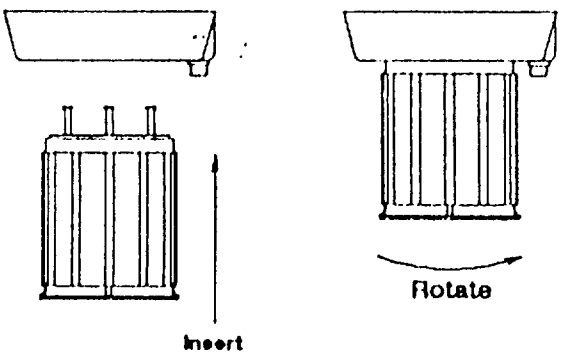

Typical wiring of a 3 wire detector loop

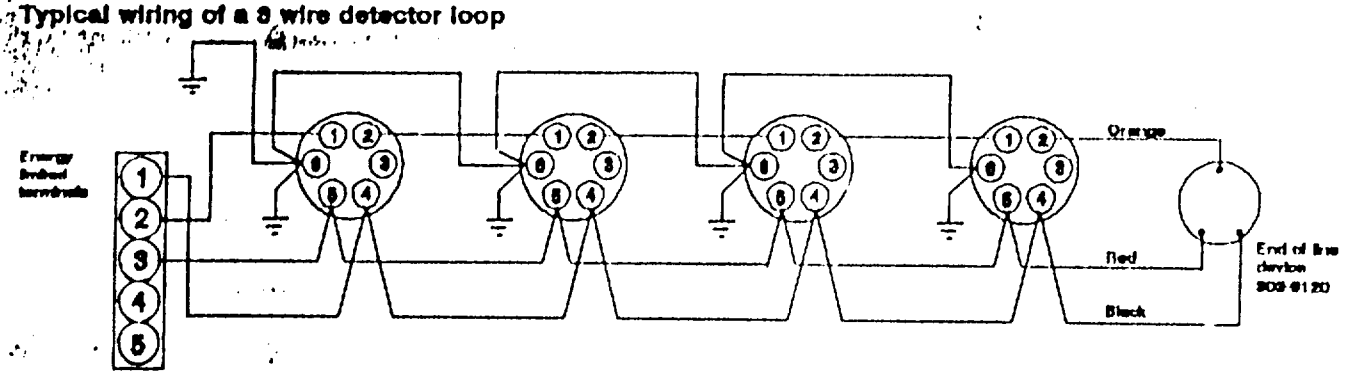

NOTE: All wires must be terminated with non-insulated ring or fork lugs. DO NOT run 3 wire loop in conduit with A.C. wiring or control circuits for other systems

EXHIBIT 10

Advanced Detection Technology, Inc

2180 IONIZATION SMOKE DETECTOR BULLETIN

313-2180 Standard Detector

DESCRIPTION: Model 313-2180
The Model 313-2180 is a dual chamber, nominal 24-volt device using the ionization principal to sense both visible smoke and invisible particles of combustion.

The inner or reference chamber enables the detector to adjust to normal changes in humidity, temperature and pressure. The outer chamber measures the presence of smoke or invisible combustion products.

The 100% solid state circuit achieves singular stability by means of three stages:

The first stage is a junction FET which senses the change in voltage which results when combustion products enter the outer chamber.

The second stage is essentially a voltage comparator which screens out minor fluctuations in the output of the first stage and amplifies only the signals which satisfy its level requirements.

The third stage is a timer. It requires that the second stage output signal be present for a nominal 5 seconds before locking the detector into alarm.

SPECIFICATIONS:
The detector plugs into a common socket, 313-9000, which may accept thermal detectors as well.

The common socket permits wiring to an individual remote signal lamp from the remote alarm light terminal (3) without wires returning to the control panel or to a system graphic annunciator. It may also house the End of Line Device Model 303-9120. A detector retaining locking tab is provided in the socket to discourage unauthorized detachment of detector. A special removal tool (450-2101) is required to release the detector. If the locking fixture is not needed, simply break it off.

The common socket can be mounted on any standard 4" octagon or round wiring box and is so dimensioned that it provides its own plastic ceiling trim. It can also be mounted on a 4" square wiring box. The socket can accommodate wire from No. 18 to No. 12 AWG without terminations as binding head screws are used. Wherever local codes permit, limited energy shielded cable may also be used. A ground conductor, included with the other wires form the control panel should be bonded to both screw terminal #6 and the wiring box. This ground conductor should not be the cable shield or shield drain wire.

Temperature:
Variable Operational Ambients
32 F (0 C) to 120 F (49 C)
0 F (-17.8 C) to 150 F (66 C) rapid cycle
Variable Storage Ambients
-20 F (-30 C) to 158 F (70 C)

Humidity:
85 +/- 5% at 86 +/-4 F (30 +/-2 C)

Air Velocity:
0-300 +/- 25 feet per minute

Barometric Pressure:
10 cycles of 2 inch mercury change
31 to 29 inches Hg (787mm to 737mm Hg)

Corrosive Atmospheres:
0.1% H2S (Hydrogen Sulphide) in air saturated with water for 10 days.
1.0% CO2 (Carbon Dioxide) and 0.5% SO2 (Sulphur Dioxide) in air saturated with water for 10 days.

6. Static Discharge
10 KV to shell

Voltage:
Nominal 24 volts, D.C. regulated filtered, full-wave rectified as supplied by FIRETEK control panels such as System 240, 624 and 210.

Current:
Standby - Nominal 1.0mA at 24VDC

Alarm:
Nominal 60 mA (socket lamp only) 110 mA with socket lamp and 2 accessories.

Qualification Timer:
2180/2180 5 second

Radioactive content:
1.0 microcuries of Americium 241 are used in each detector -distributed in two sealed sources--one in the sample (outer) chamber and one in the reference (inner) chamber. These detectors are manufactured and distributed under licensing of the U.S.N.R.C., free of further regulatory control.

Standard detector Mounting

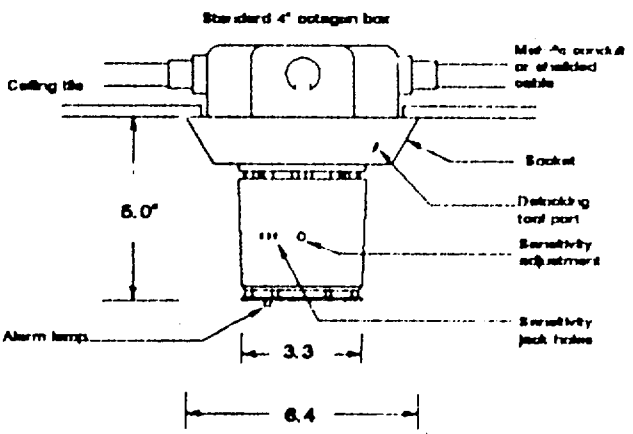

5 Old Town Park Rd. · South End Plaza · Unit 28 · New Milford, CT 06776

APPLICATION:

Underwriters' Laboratories, Inc. does not list a specific spacing for Ionization detectors. The detectors are fire tested at minimum sensitivity per U.L. Standard268. N.F.P.A. Standard 72E list spacing up to 900 sq. ft. This, however should be used only as a maximum limitation guide. Beams and other ceiling obstructions should be considered both as to spacing away of the detector and their effect of subdividing the area. Air movements, air conditioning supply, and return registers must be considered both as to the number of detectors required and their locations. NFPA Bulletin No. 72E should be consulted for specific guidelines.

The authority having jurisdiction over special hazards such as computer rooms and other such installations may require spacings of 250 square feet or less due to high air exchange rates or exceptional fire risk. Particle detection equipment, actual test fires and engineering analysis may be necessary to determine the optimum quantity and location of detectors.

The detector has been designed for installation on the top surface of the hazard area (such as the ceiling of a room) when in still air environments.

Under these conditions the Aerodynamics of thedetector body serve to funnel smoke into the sample chamber as a smoke plumeexpands along a ceiling. The long body of the detector allows it to protrude down out of the boundary layer that forms right at the ceiling. For this reason recessed detector housing will reduce the detector's performance.In other environments the air movement patterns must be considered when establishing the location and servicing of the detectors. In areas with high air flows, dust and dirt will accumulate in the detector more rapidly; Increased maintenance must be performed and an air attenuator 303-1000 should be added.

The 303-2180 has not been tested by Underwriters' Laboratories, Inc. for environmental stability in accordance with standards UL 268. Some of the basic conditions that must be met for compliance are listed above and are presented to help serve as application guidelines. In all cases a ADVANCED DETECTION TECHNOLOGIES technical representative should be consulted if the detectors are to be operated under adverse environmental conditions.

SENSITIVITY:

The sensitivity of the detector is field adjustable and tested with a standard voltmeter. The limits on the sensitivity adjustment ange are set at the factory. The maximum sensitivity reading is 1.6 v +/- 10% and corresponds to an approximate .6% per foot obscuration in the UL 268 smoke chamber. The minimum sensitivity setting is 2.2 v +/- 10% which corresponds approximately to a 1.0% per foot obscuration. To adjust the sensitivity one inserts the adjustment tool, 450-2010, into theadjustment screw driver slot and rotate clockwise to decrease the sensitivity and counterclockwise to increase it. Do not use metallic screw drivers as they tend to chew up the adjustment potentiometer.

The sensitivity is checked as follows:

1. Plug an A.D.T. probe #450-1080 into any digital voltmeter with a minimum of 10 Megohm input impedance.
2. Plug in to the detector as shown, wait 5 seconds and note down the reading. You may notice drift, especially if your meter gives you 2 decimal places. Ignore the second decimal place.
3. If you wish to alarm the detector, press the alarm button on the probe and the detector should go into alarm in 10 seconds.

NOTE: *While the sensitivity can be adjusted with the probe inplace, the reading will lag the adjustment by a few seconds.*
To repeat, switch the mode switch of the Sensitivity Checker to standby and rotate the detector out of the socket for a moment. Then rotate the detector back into the socket and wait 15 seconds before repeating the last test.

MAINTENANCE:

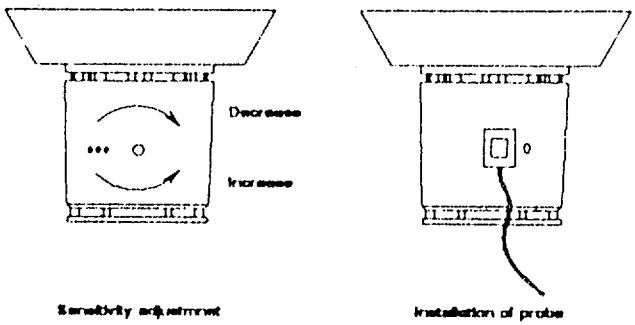

The fire detection system must be maintained in order to work properly. ADVANCED DETECTION TECHNOLOGIES recommends that the detectors be serviced at least annually - more frequently where conditions dictate or where the detection releases extinguishing agents. The maintenance of the detector involves the check of sensitivity and adjustment or cleaning. Normalcleaning involves the removal of the detector from the socket.

Take a soft brush to remove accumulated dust from the outer shell. It is advisable to blow gently with compressed air or nitrogen to clean off the internal surfaces.

This cleaning procedure should be sufficient for the majority of applications.

In extreme conditions a more thorough cleaning may be necessary, especially if upon inspection, the chamber endplate is still dirty and the dirt clings to the inner surfaces of the detector, the factory should be consulted for specific recommendations.

Every maintenance operation should end with a sensitivity check with the detector in its actual operating location and with all air movements normal.

A permanent record of the maintenance procedures and sensitivity checker readingd should be kept at the job site.

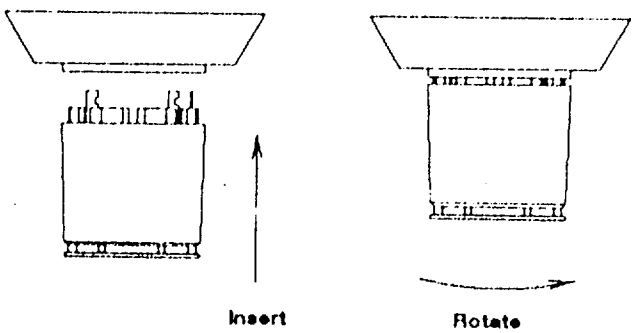

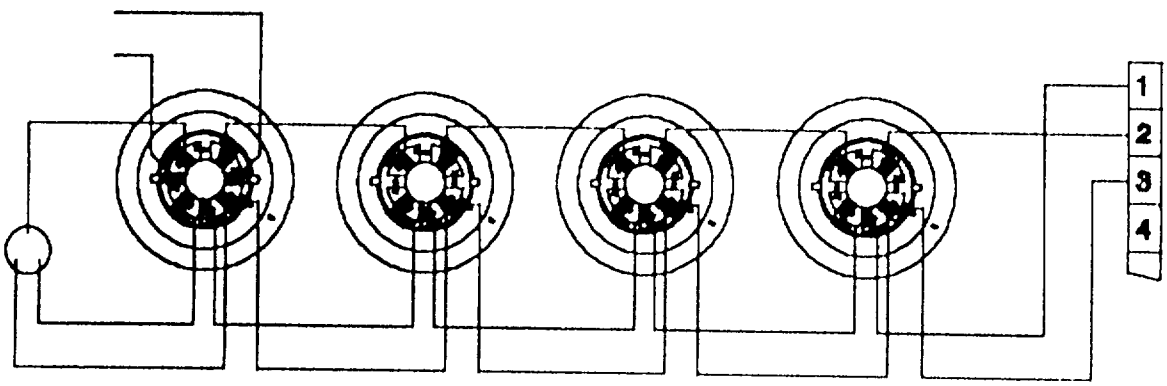

782-2160

EXHIBIT 11

Advanced Detection Technology, Inc

2280 IONIZATION SMOKE DETECTOR BULLETIN

313-2280 Detector ~~with 19-pins~~

DESCRIPTION: Model 313-2280
The Model 303-2280 is a dual chamber, nominal 24-volt device using the ionization principal to sense both visible smoke and invisible particles of combustion.

The inner or reference chamber enables the detector to adjust to normal changes in humidity, temperature and pressure. The outer chamber measures the presence of smoke or invisible combustion products.

The 100% solid state circuit achieves singular stability by means of three stages:

The first stage is a junction FET which senses the change in voltage which results when combustion products enter the outer chamber.

The second stage is essentially a voltage comparator which screens out minor fluctuations in the output of the first stage and amplifies only the signals which satisfy its level requirements.

The third stage is a timer. It requires that the second stage output signal be present for a nominal 5 seconds before locking the detector into alarm.

SPECIFICATIONS:
The detector plugs into a common socket, 313-9000, which may accept thermal detectors as well.

The common socket permits wiring to an individual remote signal lamp from the remote alarm light terminal (3) without wires returning to the control panel or to a system graphic annunciator. It may also house the End of Line Device Model 303-9120. A detector retaining locking tab is provided in the socket to discourage unauthorized detachment of detector. A special removal tool (450-2101) is required to release the detector. If the locking fixture is not needed, simply break it off.

The common socket can be mounted on any standard 4" octagon or round wiring box and is so dimensioned that it provides its own plastic ceiling trim. It can also be mounted on a 4" square wiring box. The socket can accommodate wire from No. 18 to No. 12 AWG without terminations as binding head screws are used. Wherever local codes permit, limited energy shielded cable may also be used. A ground conductor, included with the other wires form the control panel should be bonded to both screw terminal #6 and the wiring box. This ground conductor should not be the cable shield or shield drain wire.

Temperature:
Variable Operational Ambients
32 F (0 C) to 120 F (49 C)
0 F (-17.8 C) to 150 F (66 C) rapid cycle
Variable Storage Ambients
-20 F (-30 C) to 158 F (70 C)

Humidity:
85 +/- 5% at 86 +/- F (30+/-2 C)

Air Velocity:
0-300 +/- 25 feet per minute

Barometric Pressure:
10 cycles of 2 inch mercury change
31 to 29 inches Hg (787mm to 737mm Hg)

Corrosive Atmospheres:
0.1% H2S (Hydrogen Sulphide) in air saturated with water for 10 days.
1.0% CO2 (Carbon Dioxide) and 0.5% SO2 (Sulpher Dioxide) in air saturated with water for 10 days.

6. Static Discharge
10 KV to shell

Voltage:
Nominal 24 volts, D.C. regulated filtered, full-wave rectified as supplied by FIRETEK control panels such as System 240, 624 and 210.

Current:
Standby - Nominal 1.0mA at 24VDC

Alarm:
Nominal 60 mA (socket lamp only) 110 mA with socket lamp and 2 accessories.

Qualification Timer:
2280/2280 5 second

Radioactive content:
1.0 microcuries of Americium 241 are used in each detector--distributed in two sealed sources one in the sample (outer) chamber and one in the reference (inner) chamber. These detectors are manufactured and distributed under licensing of the U.S.N.R.C., free of further regulatory control.

Standard detector Mounting

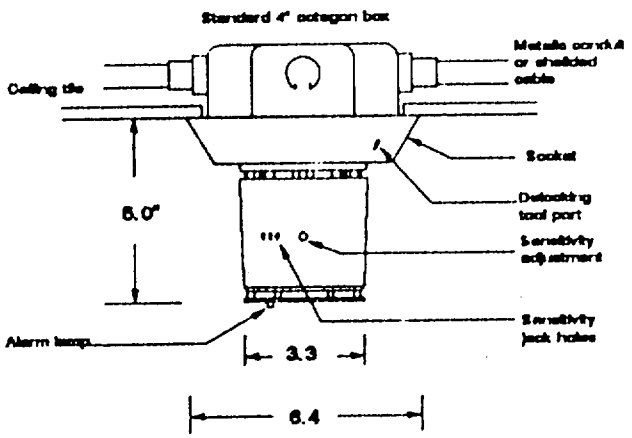

5 Old Town Park Rd. · South End Plaza · Unit 28 · New Milford, CT 06776

APPLICATION:

Underwriters' Laboratories, Inc. does not list a specific spacing for ionization detectors. The detectors are fire tested at minimum sensitivity per U.L. Standard268. N.F.P.A. Standard 72E list spacing up to 900 sq. ft. This, however should be used only as a maximum limitation guide. Beams and other ceiling obstructions should be considered both as to spacing away of the detector and their effect of subdividing the area. Air movements, air conditioning supply, and return registers must be considered both as to the number of detectors required and their locations. NFPA Bulletin No. 72E should be consulted for specific guidelines.

The authority having jurisdiction over special hazards such as computer rooms and other such installations may require spacings of 250 square feet or less due to high air exchange rates or exceptional fire risk. Particle detection equipment, actual test fires and engineering analysis may be necessary to determine the optimum quantity and location of detectors.

The detector has been designed for installation on the top surface of the hazard area (such as the ceiling of a room) when in still air environments.

Under these conditions the Aerodynamics of thedetector body serve to funnel smoke into the sample chamber as a smoke plumeexpands along a ceiling. The long body of the detector allows it to protrude down out of the boundary layer that forms right at the ceiling. For this reason recessed detector housing will reduce the detector's performance.In other environments the air movement patterns must be considered when establishing the location and servicing of the detectors. In areas with high air flows, dust and dirt will accumulate in the detector more rapidly; increased maintenance must be performed and an air attenuator 303-1000 should be added.

The 303-2160 has not been tested by Underwriters' Laboratories, Inc. for environmental stability in accordance with standards UL 268. Some of the basic conditions that must be met for compliance are listed above and are presented to help serve as application guidelines. In all cases a ADVANCED DETECTION TECHNOLOGIES technical representative should be consulted if the detectors are to be operated under adverse environmental conditions.

SENSITIVITY:

The sensitivity is checked as follows:

1. Plug an A.D.T. probe #450-1080 into any digital voltmeter with a minimum of 10 Megohm input impedance.
2. Plug in to the detector as shown, wait 5 seconds and note down the reading. You may notice drift, especially if your meter gives you 2 decimal places. Ignore the second decimal place.
3. If you wish to alarm the detector, press the alarm button on the probe and the detector should go into alarm in 10 seconds.

NOTE: *While the sensitivity can be adjusted with the probe in place, the reading will lag the adjustment by a few seconds.*

Installation of probe

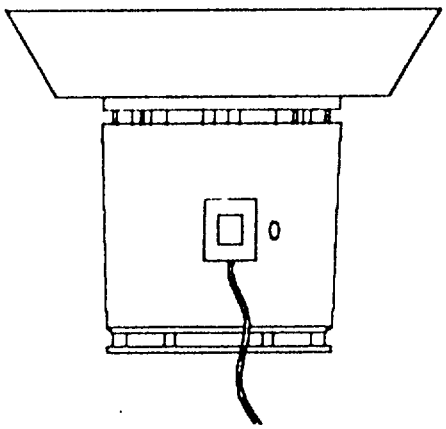

MAINTENANCE:

The fire detection system must be maintained in order to work properly. ADVANCED DETECTION TECHNOLOGIES recommends that the detectors be serviced at least annually - more frequently where conditions dictate or where the detection releases extinguishing agents. The maintenance of the detector involves the check of sensitivity and adjustment or cleaning. Normalcleaning involves the removal of the detector from the socket.

Take a soft brush to remove accumulated dust from the outer shell. It is advisable to blow gently with compressed air or nitrogen to clean off the internal surfaces.

This cleaning procedure should be sufficient for the majority of applications.

In extreme conditions a more thorough cleaning may be necessary, especially if upon inspection, the chamber endplate is still dirty and the dirt clings to the inner surfaces of the detector, the factory should be consulted for specific recommendations.

Every maintenance operation should end with a sensitivity check with the detector in its actual operating location and with all air movements normal.

A permanent record of the maintenance procedures and sensitivity checker [illegible] should be kept at the job site.

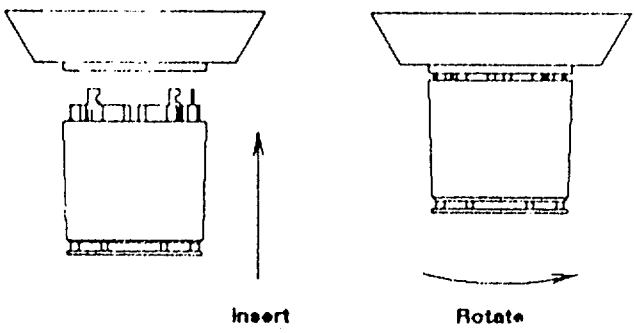

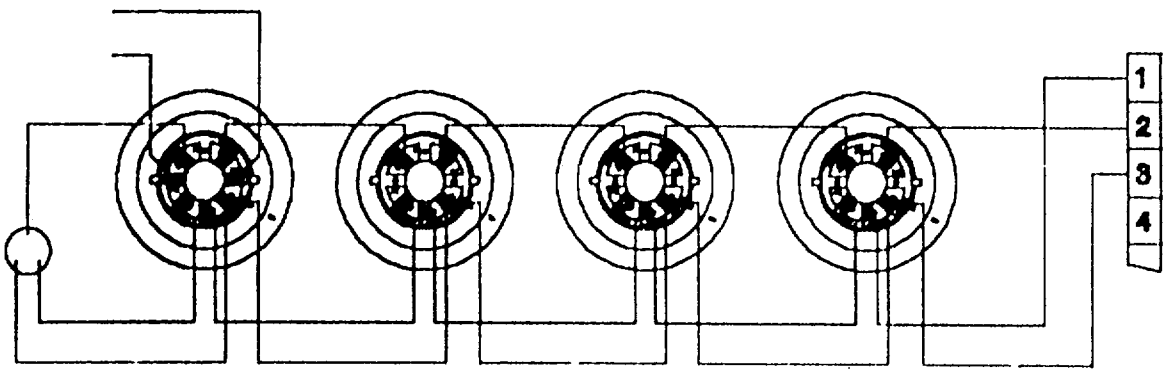

782-2160

EXHIBIT # 12

DETECTOR BAG CLOSURE LABEL —

WILL CLOSE THE BAG CONTAINING DETECTOR

REGARDLESS OF THE DETECTOR.

"THIS DETECTOR CONTAINS RADIOACTIVE MATERIAL (1.0 MICROCURIES OF AMERICIUM 241) AND HAS BEEN MANUFACTURED IN COMPLIANCE WITH U.S.N.R.C. SAFETY CRITERIA IN 10CFR. 32.27 THE PURCHASER IS EXEMPT FROM ANY REGULATORY REQUIREMENT."

Advanced Detection Technologies, Inc.
5 Old Town Park Rd., South End Plaza, Unit 28
New Milford, CT 06776

EXHIBIT 13

313-2180 & 312-2280 DETECTOR LABELS

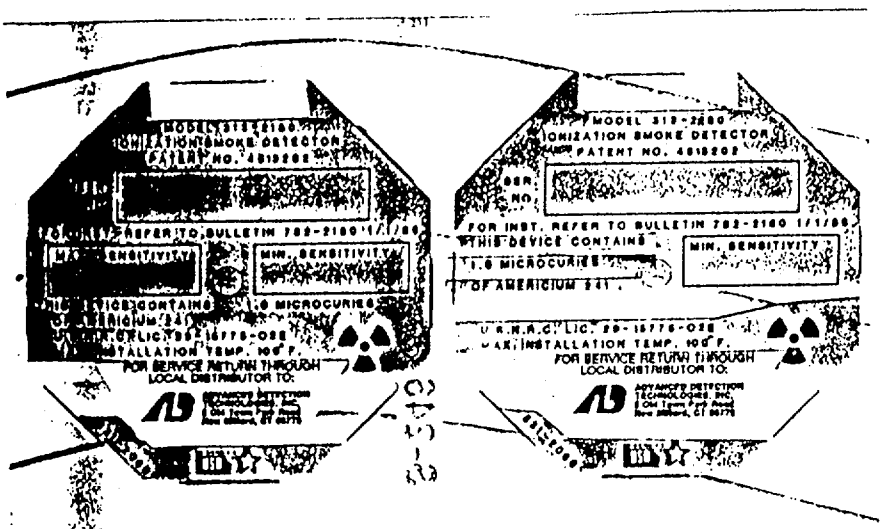

LABEL FOR ADVANCED DETECTION TECHNOLOGIES 313-2180

LABEL FOR ADVANCED DETECTION TECHNOLOGIES 312-2280

SIRS,

I APPOLOGIZE FOR GIVING YOU COPIES OF MOCKED-UP LABELS, BUT AS WE DECIDED TO INCLUDE THESE TWO VARIANTS AT THE LAST MINUTE WE HAVE NOT HAD ENOUGH TIME TO HAVE ARTWORK MADE UP.

JEFFREY G. CHOLIN

115072

BETWEEN:

LICENSE FEE MANAGEMENT BRANCH, ARM
AND
REGIONAL LICENSING SECTIONS

(FOR LFMS USE)
INFORMATION FROM LTS

PROGRAM CODE: 03214
STATUS CODE: 3
FEE CATEGORY: 36
EXP. DATE: 19950225
FEE COMMENTS: _____

LICENSE FEE TRANSMITTAL

A. REGION 4

1. APPLICATION ATTACHED
   APPLICANT/LICENSEE: FIRETEK CORPORATION
   RECEIVED DATE: 910730
   DOCKET NO: 3014912
   CONTROL NO.: 115072
   LICENSE NO.: 29-15775-03
   ACTION TYPE: TERMINATION

2. FEE ATTACHED
   AMOUNT: ---/---
   CHECK NO.: ---/---

3. COMMENTS

SIGNED [signature]
DATE 8/30/91

B. LICENSE FEE MANAGEMENT BRANCH (CHECK WHEN MILESTONE 03 IS ENTERED) (✓)

1. FEE CATEGORY AND AMOUNT: 2.0 FEE EXEMPT Termination

2. CORRECT FEE PAID. APPLICATION MAY BE PROCESSED FOR:
   AMENDMENT ---✓---
   RENEWAL ---
   LICENSE ---

3. OTHER ---

SIGNED Lita Jacques
DATE 9/6/91