123 Main Street
White Plains, New York 10601
914 681.6200

NewYorkPower Authority

October 12, 2000
JPN-00-039

United States Nuclear Regulatory Commission
Attn: Document Control Desk
Mail Station P1-137
Washington, D.C. 20555

Subject: James A. FitzPatrick Nuclear Power Plant
Docket No. 50-333
Response to Request for Additional Information
Related to the James A. FitzPatrick Suppression Pool

Dear Sir;

By Letter dated August 23, 2000, your staff requested information regarding the electrical power configuration for certain pumps and valves in the James A FitzPatrick (JAF) Low Pressure Coolant Injection (LPCI) and Core Spray (CS) systems. This request also asked for information relating to calculations performed for the JAF suppression pool.

Attachment I is the Authority's response to these requests.

Very truly yours

Harry P. Salmon, Jr.
Vice President Engineering

STATE OF NEW YORK
COUNTY OF WESTCHESTER
Subscribed and sworn to before me
this 12th day of October, 2000.

Geraldine Strand

GERALDINE STRAND
Notary Public, State of New York
No. 4991272
Qualified in Westchester County
Commission Expires Jan. 27, 2002

cc: next page

A001

cc: Regional Administrator
U.S. Nuclear Regulatory Commission
475 Allendale Road
King of Prussia, PA 19406

Office of the Resident Inspector
U.S. Nuclear Regulatory Commission
P.O. Box 136
Lycoming, NY 13093

Mr. Guy Vissing, Project Manager
Project Directorate I
Division of Licensing Project Management
U.S. Nuclear Regulatory Commission
Mail Stop 8C2
Washington, DC 20555

Attachment I to JPN-00-039

Response to Request for Additional Information
Related to the James A. FitzPatrick Suppression Pool

1. Information related to the recently issued GE SIL 630

   A What is your response to the new GE SIL?

   GE SIL 630 is currently under review in accordance with the Authority's Operating Experience Review Program. This review is not complete. The technical concerns identified in SIL 630 had been previously identified and documented in Deviation Event Reports (DERs 00-00064 & 00-00061) in accordance with the Authority's Corrective Action Program. When these potential concerns were identified, the Authority contacted the NSSS vendor (General Electric) to determine if the concerns identified in these DERs had been considered during plant design and subsequent analysis conducted by GE. As a result of these inquiries, GE initiated SIL 630. The Authority's final response to SIL 630 will be based on input from GE requested as part of these inquiries. Concurrent with these inquiries, the Authority evaluated the operability of the potentially effected Emergency Core Cooling Systems (ECCS) and concluded that these systems were operable. The basis for this determination was the review of a 11/10/75 Telex to GE from JAFs Architect Engineer, Stone and Webster Engineering Corporation (SWEC). This telex indicates that:

   > *"all new electrical installation required by this mod." (F1-75-261) "will be performed in strict accordance with previously established separation and other installation criteria to insure the continued integrity of the ECCS wiring."*

   This provides strong indication that the "Vermont Yankee" mod fix was installed in a manner that no single raceway failure due to a single active component failure will compromise the ECCS system.

   B What is the probability of the wireway failure addressed in the SIL?

   The wireway failures addressed in the SIL were not explicitly addressed in the operability assessments performed for DERs 00-00064 & 00-00061. Rather, the operability assessment for DER 00-00061 considered the following problem statement:

   > *"During a LOCA event when LPCI is needed, a single failure could be postulated that could result in affecting the functionality of the LPCI inverters and transfer switches and consequently render the valves (10MOV-66A/B, 10MOV-27A/B, 10MOV-25A/B, 02MOV-43A/B & 02MOV-53A/B) fed by these inverters or alternate sources incapable of operation or cause spurious operation."*

   The motor operated valves identified above include the Low Pressure Coolant Injection (LPCI) injection valves, the Residual Heat Removal (RHR) heat exchanger bypass valves and the Recirculation Pump suction and discharge isolation valves.

Attachment I to JPN-00-039

Response to Request for Additional Information
Related to the James A. FitzPatrick Suppression Pool

The operability assessment concluded that:

> *"Consequential loss of a wireway due to a LOCA does not appear credible, in that a preliminary assessment indicated that all circuitry and wireways of concern are located outside of the containment. The ECCS response sets of concern only apply to LOCA events; not HELB events-and only active failures are assumed when performing LOCA analysis."*

2. How are the core spray pumps, low pressure coolant injection (LPCI) pumps and their associated valves powered? Please provide sketches or schematics.

   Refer to Figure 1.

3. Is each injection valve powered from redundant power sources and, if so, how are the cables for these valves physically separated?

   Figure 1 is a functional sketch, which identifies the redundant power sources for the subject injection valves. Divisional separation is maintained in accordance with the Authority's established separation requirements.

4. How are the core spray pumps, LPCI pumps and their associated valve cables routed?

   The table below illustrates the components on Figure 1 which share raceway for some portion of the routing of their power cables. Control cable routing was not addressed.

Group			
1	A-CS Pump	A-RHR Pump	B-RHR Pump
2	B-CS Pump	D-RHR Pump	
3	C-RHR Pump		
4	14MOV-11A	14MOV-12A	
5	14MOV-11B	14MOV-12B	
6	10MOV-66A	10MOV-27A	10MOV-25A
7	10MOV-66B	10MOV-27B	10MOV-25B

5. In reference to your letter of 6/30/00, we would like to know more about a calculation you made for suppression pool temperature. Specifically, your calculation # DE&S A384.F02-04 Rev 1 discusses suppression pool heating. Page 19 states that the maximum suppression pool temperature could be 204F including a 37F allowance for bulk to local temperature differences. A separate calculation in response to NRC Generic Letter 96-04 states that the maximum suppression pool temperature can be as high as 213F. The higher temperature apparently accounts for an increase in allowable lake water temperature and a power upgrade.

Attachment I to JPN-00-039

Response to Request for Additional Information
Related to the James A. FitzPatrick Suppression Pool

The question is: Does the later suppression pool temperature calculation account for the bulk to local temperature difference? Please provide a brief the derivation of the 213 F suppression temperature.

It appears that question 5 is related to the results of analyses of different events. The values of 204°F and 37 °F from page 16 of the DE&S report are related to concerns with condensation of steam from SRV discharge which is essentially a local phenomena. The value of 213 °F from the NRC Generic Letter 97-04 response is related to pool temperature and ECCS pump evaluation for conditions following a large break LOCA. These temperatures were calculated assuming power uprate and 87 °F lake water temperature.

204 °F is the peak local temperature for a reactor scram followed by reactor isolation (non-mechanistic MSIV closure) followed by rapid cooldown when pool temperature reaches 120 °F. 213 °F is the peak temperature following a design basis loss of coolant accident with containment cooling assumed to be initiated 10 minutes into the event.

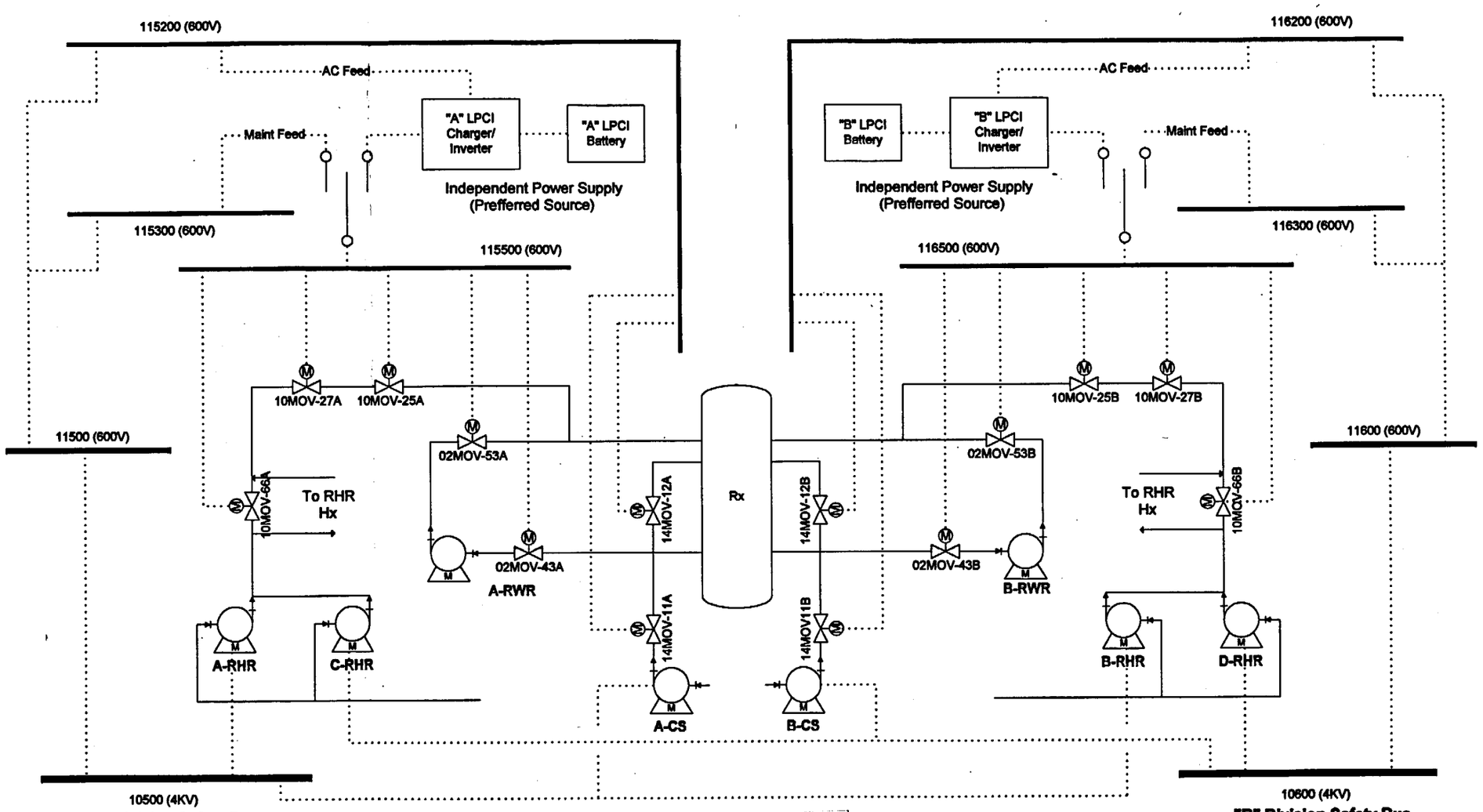

Figure 1 of JPN-00-039

LPCI & CS Bus/Injection Valve/
Pump Power Configuration