CP&L
Carolina Power & Light Company
P.O. Box 10429
Southport, NC 28461-0429

OCT 1 2 2000

10 CFR 50.55a(a)(3)(i)

SERIAL: BSEP 00-0089

U. S. Nuclear Regulatory Commission
ATTN: Document Control Desk
Washington, DC 20555-0001

BRUNSWICK STEAM ELECTRIC PLANT, UNIT NOS. 1 AND 2
DOCKET NOS. 50-325 AND 50-324/LICENSE NOS. DPR-71 AND DPR-62
REQUEST FOR APPROVAL OF RELIEF REQUEST FOR THE THIRD 10-YEAR INSERVICE INSPECTION PROGRAM

Gentlemen:

In accordance with 10 CFR 50.55a(a)(3)(i), Carolina Power & Light (CP&L) Company is requesting relief from the requirements of the 1989 Edition of the American Society of Mechanical Engineers (ASME) Boiler and Pressure Vessel Code, Section XI, for the Brunswick Steam Electric Plant (BSEP), Unit Nos. 1 and 2.

By letter dated April 23, 1998, CP&L submitted the third 10-year Inservice Inspection (ISI) Program for BSEP, Unit Nos. 1 and 2. The code of record for the third 10-year inservice inspection program for BSEP, Unit Nos. 1 and 2, is the ASME Code, Section XI, 1989 Edition with no addenda.

Table IWC-2500-1, Examination Category C-H of ASME Section XI Code, 1989 Edition, requires the Containment Atmosphere Control (CAC) and Standby Gas Treatment (SGT) systems to be pressure tested with a visual (VT-2) examination. As an alternative, CP&L proposes to verify the structural integrity of portions of the CAC system and the entire SGT system, as described in Enclosure 1, each refueling outage, through walkdowns performed by plant engineering personnel. The justification for this request is included in the enclosed Relief Request RR-26, "Relief From Pressure Testing Portions of the Containment Atmosphere Control and Standby Gas Treatment Systems."

Approval of Relief Request RR-26, Revision 0, is requested by January 15, 2001, to support the upcoming BSEP, Unit No. 2 refueling outage.

A047

Please refer any questions regarding this submittal to Mr. Leonard R. Beller, Supervisor - Licensing, at (910) 457-2073.

Sincerely,

David C. DiCello
Manager - Regulatory Affairs
Brunswick Steam Electric Plant

WRM/wrm

Enclosure: Relief Request RR-26, Revision 0

cc (with enclosure):

U. S. Nuclear Regulatory Commission, Region II
ATTN: Mr. Luis A. Reyes, Regional Administrator
Sam Nunn Atlanta Federal Center
61 Forsyth Street, SW, Suite 23T85
Atlanta, GA 30303-8931

U. S. Nuclear Regulatory Commission
ATTN: Mr. Theodore A. Easlick, NRC Senior Resident Inspector
8470 River Road
Southport, NC 28461-8869

U. S. Nuclear Regulatory Commission
ATTN: Mr. Donnie J. Ashley (Mail Stop OWFN 8G9)
11555 Rockville Pike
Rockville, MD 20852-2738

Ms. Jo A. Sanford
Chair - North Carolina Utilities Commission
P.O. Box 29510
Raleigh, NC 27626-0510

Division of Boiler and Pressure Vessel
North Carolina Department of Labor
ATTN: Mr. Jack Given, Assistant Director of Boiler & Pressure Vessels
4 West Edenton Street
Raleigh, NC 27601-1092

ENCLOSURE

BRUNSWICK STEAM ELECTRIC PLANT, UNIT NOS. 1 AND 2
DOCKET NOS. 50-325 AND 50-324/LICENSE NOS. DPR-71 AND DPR-62
REQUEST FOR APPROVAL OF RELIEF REQUEST
FOR THE THIRD 10-YEAR INSERVICE INSPECTION PROGRAM

Relief Request RR-26, Revision 0

**RELIEF REQUEST: RR-26 (Rev. 0)**

**SUBJECT: RELIEF FROM PRESSURE TESTING PORTIONS OF THE CONTAINMENT ATMOSPHERE CONTROL AND STANDBY GAS TREATMENT SYSTEMS**

## COMPONENTS FOR WHICH RELIEF IS REQUESTED:

This request for relief is applicable to the Brunswick Steam Electric Plant (BSEP), Unit Nos. 1 and 2, for a portion of the Containment Atmosphere Control (CAC) system and the entire Standby Gas Treatment (SGT) system subject to examination in accordance with the American Society of Mechanical Engineers (ASME) Boiler and Pressure Vessel Code, Section XI, Table IWC-2500-1, Examination Category C-H.

The portion of CAC system that this relief request applies to is from the inboard isolation valves (i.e., CAC-V7, CAC-V172, CAC-V9, and CAC-V49) to the Code boundary valve (i.e., 1K-BFV-RB for Unit 1, 2K-BFV-RB for Unit 2) immediately prior to the purge exhaust fans. This portion of the CAC system provides a non-safety function, with the exception of the primary containment isolation function which is tested in accordance with 10 CFR 50, Appendix J. NOTE: When CAC is referred to throughout this request, reference is only being made to that portion of the CAC system that is described above and identified on Attachment 1.

## ASME SECTION XI CODE REQUIREMENT:

Table IWC-2500-1 Examination Category C-H of ASME Code, Section XI, 1989 Edition, requires a pressure test with a visual (VT-2) examination every Inspection Period.

## REQUESTED RELIEF:

In accordance with 10 CFR 50.55a(a)(3)(i), Carolina Power & Light (CP&L) Company requests approval of an alternative examination to verify the structural integrity of the subject components. Structural integrity of the CAC and SGT systems will be verified, each refueling outage, by performing walkdowns of accessible portions of the systems by Engineering personnel versus a pressure test and visual (VT-2) examination as specified in Table IWC-2500-1 Examination Category C-H of ASME Code, Section XI, 1989 Edition.

## BASIS FOR REQUESTING RELIEF:

CP&L has determined that performing walkdowns each refueling outage by Engineering personnel in lieu of the pressure test and visual (VT-2) examination will provide an acceptable level of quality and safety for the following reasons:

1. The affected components of the CAC and SGT systems do not perform a "pressure retaining function" during normal or post-accident operations. The SGT system and the supporting portions of the CAC system provide a suction flow path

for a filtered release path from the primary and secondary containments to the main stack. Because these systems provide a pneumatic function rather than a pressure retaining function for a process liquid, these systems are less susceptible to degradation mechanisms. These systems are normally in standby mode until needed during normal operation, or until needed during post-accident operation (i.e., venting and purging). During normal operation and post-accident operation, these components will experience minimal or negative pressures.

Normal Operation

During normal operation, the affected portion of the CAC system is in standby mode. When purging through the purge exhaust fans, procedural controls require the primary pressure to be between –0.25 and 1.00 psig. If pressure begins to rise, the primary containment isolation valves will automatically isolate at 1.7 psig. Given these pressure limitations, the affected CAC components experience minimal pressures.

The SGT system is also in standby mode during normal plant operation, with suction from the Reactor Building atmosphere in case an automatic start signal occurs. Primary containment pressure may slowly rise during normal operation due to nitrogen inleakage from the Pneumatic Nitrogen system, steam leaks, and seasonal temperature increases. To reduce this pressure, the torus and drywell are individually vented through the SGT system while in Modes 1, 2, or 3. The SGT system blowers are not required for this function. The differential pressure between primary containment and atmospheric pressure is the only driving head. The venting process may commence when the drywell pressure has reached 0.15 psig. Since the SGT system cannot withstand a direct LOCA environment while performing normal venting through the large CAC valves, the smaller 2-inch CAC bypass valves (i.e., CAC-V22, CAC-V23, and CAC-V172) are used. As with the CAC components discussed above, these SGT system components are subjected to minimal pressure during this function.

Post-Accident

Since post-LOCA venting introduces a possibility of pressurization on specific portions of these components, provisions have been made for venting of the primary containment atmosphere under pressurized conditions using the two, in parallel, 1/2-inch valves (i.e., SGT-V8 and SGT-V9). This will minimize pressures in the component upstream of the SGT blowers.

While the SGT system is aligned to the secondary containment atmosphere and with the SGT blowers in operation, the components downstream of the SGT blowers may encounter a slight positive pressure. In the unlikely event that a breach of a downstream component occurs, the consequences would be

insignificant because the process fluid would have previously been filtered by the SGT system.

2. As discussed above, the affected components are subject to negligible pressure. Thus, for these components, a visual (VT-2) examination is unlikely to detect leakage during a system functional test. Additionally, since the CAC and SGT systems are pneumatic versus liquid processing systems, visual (VT-2) examinations are not effective in identifying leakage.

   Therefore, due to the CAC and SGT systems' design and function, the performance of a pressure test and visual (VT-2) examination is not a beneficial method for assuring integrity of the pressure retaining components associated with these components.

3. The inspections of accessible portions of the CAC and SGT systems by Engineering personnel during each refueling outage will be sufficient to ensure the material condition and integrity of the these systems are maintained. The plant procedure governing pressure testing will be revised to ensure performance of these Engineering inspections of accessible portions of the CAC and SGT systems.

4. The SGT and CAC systems have been constructed and tested to high quality standards. When the quality group classifications for the CAC and SGT systems were specified, they were in compliance with standards in effect at that time (i.e., USA Standard (USAS) Code for Pressure Piping, B31.1.0, 1967 Edition). The quality classification for these systems is identified in the Updated Final Safety Analysis Report (UFSAR), Table 3.2.2-7, Items 10.(l) and 11. The United Engineers & Constructors Quality Group IB classification identified in the UFSAR correlates to ASME Code, Section III, Class 2. As such, the CAC and SGT systems were constructed and tested to high quality standards (i.e., ASME Code, Section III, Class 2 quality standards).

   Prior to installation, non-destructive examination was performed on each pressure retaining component. Following installation, each butt weld associated with this piping had a surface (i.e., magnetic particle or liquid penetrant) and volumetric (i.e., 100 percent radiography) examination performed. In addition, the piping was hydrostatically tested.

   In addition to the temperature and pressure design parameters (i.e., for the CAC system, 120 to 390°F and 50 to 200 psig; for the SGT system, 150°F and 5 psig), the design of these components also included allowance for corrosion and/or erosion for a design life of forty years. As such, the large bore piping was constructed to an American National Standards Institute (ANSI) rating of 150 pounds, using carbon steel with a nominal thickness of 0.375 inch.

Because these systems have been constructed and tested to high quality standards, elimination of the pressure test and visual (VT-2) examination will not decrease the level of quality or safety for these systems.

## PROPOSED ALTERNATIVE:

During the third 10-Year inspection interval, CP&L proposes to verify the structural integrity of these components each refueling outage by performing walkdowns by Engineering personnel. These walkdowns will provide visual inspection for exterior corrosion, degradation, and structural stress. The visual inspections will be performed on accessible portions of these components from existing plant structures.

## REFERENCES:

ASME Code, Section XI, *Rules for Inservice Inspection of Nuclear Power Plants Components*, 1989 Edition.
DBD-10, *Standby Gas Treatment System.*
DBD-24, *Containment Atmospheric Control System.*
Updated Final Safety Analysis Report, Section 3.2.2, "System Quality Group Classifications."
Updated Final Safety Analysis Report, Section 6.2.5, "Combustible Gas Control In Containment."
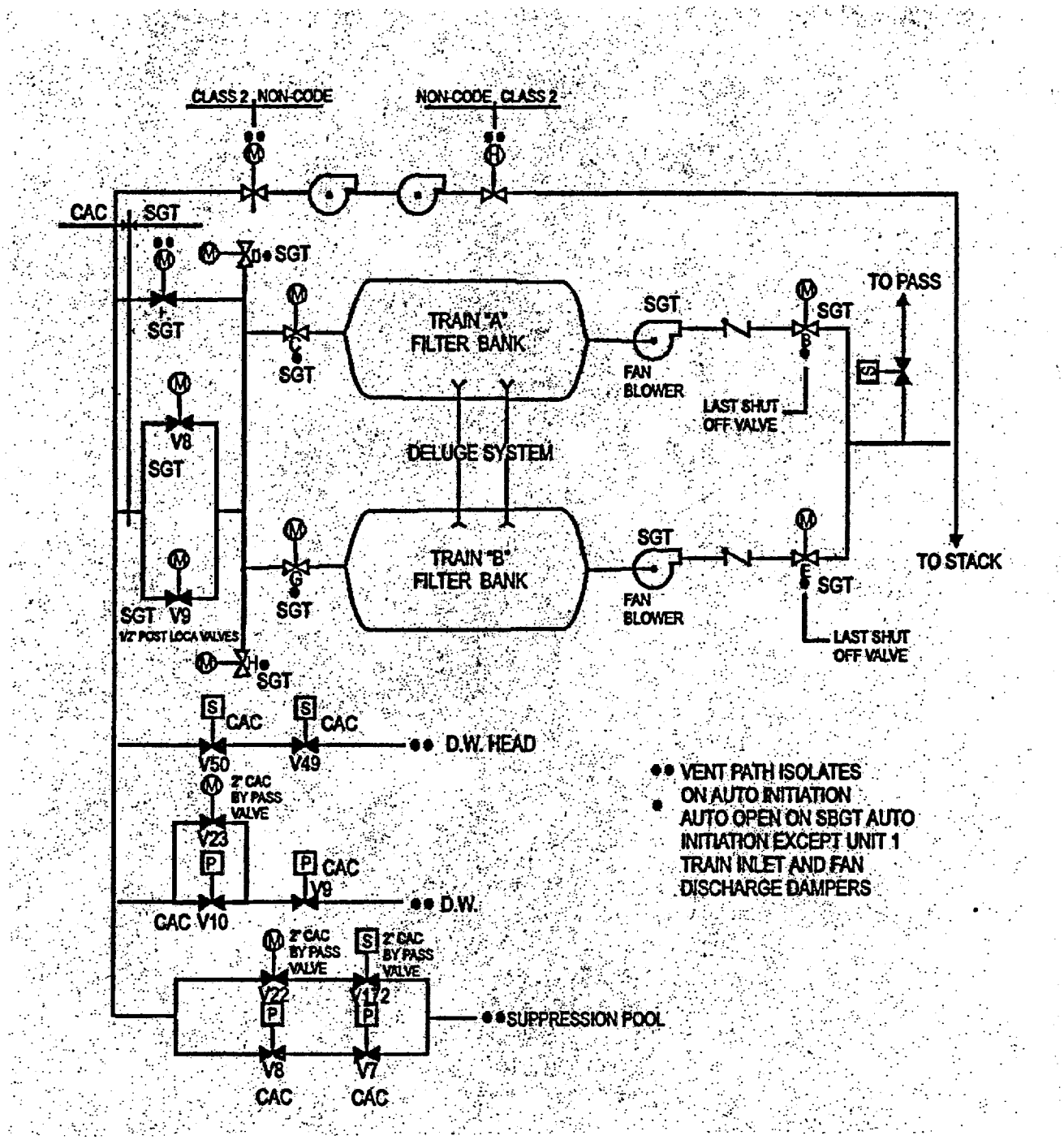
## ATTACHMENT 1
## SYSTEM FLOW DIAGRAM