WBS: 1.2.1.3
QA: L

Civilian Radioactive Waste Management System
Management and Operating Contractor

Monitored Geologic Repository
Test and Evaluation Plan

B00000000-01717-5705-00058 REV 02

June 1998

Prepared for:

U.S. Department of Energy
Yucca Mountain Site Characterization Office
P.O. Box 30307
North Las Vegas, Nevada 89036-0307

Prepared by:

TRW Environmental Safety Systems Inc.
1180 Town Center Drive
Las Vegas, Nevada 89134

Under Contract Number
DE-AC08-91RW00134

9809240315 980922
PDR WASTE
WM-11 PDR

102

ENCLOSURE 1

DISCLAIMER

This report was prepared as an account of work sponsored by an agency of the United States Government. Neither the United States nor any agency thereof, nor any of their employees, makes any warranty, expressed or implied, or assumes any legal liability or responsibility for the accuracy, completeness, or usefulness of any information, apparatus, product, or process disclosed, or represents that its use would not infringe on privately owned rights. Reference herein to any specific commercial product, process, or service by trade name, trademark, manufacturer, or otherwise, does not necessarily constitute or imply its endorsement, recommendation, or favoring by the United States Government or any agency thereof. The views and opinions of authors expressed herein do not necessarily state or reflect those of the United States Government or any agency thereof.

WBS: 1.2.1.3
QA: L

Civilian Radioactive Waste Management System
Management and Operating Contractor

Monitored Geologic Repository Test and Evaluation Plan

B00000000-01717-5705-00058 REV 02

June 1998

Prepared by:

C.F. Vecchione — 28 May 98
C.F. Vecchione
Systems Engineer
Date

Checker concurrence:

J.W. Fay — 5/28/98
J.W. Fay
Senior Staff Systems Engineer
Date

Approved by:

M. Sellers — 5-31-98
M. Sellers
Mined Geologic Disposal System
Systems Analysis Department
Department Manager
Date

INTENTIONALLY LEFT BLANK

CHANGE HISTORY

Revision Number	Effective Date	Description of Change
1	03/31/98	The Viability Assessment Mined Geologic Disposal System Test and Evaluation Plan (Revision 01) updates Revision 00 of this test plan by incorporating the latest design information used for the Viability Assessment and refines the test description sheets contained in Appendix B. These refinements are also reflected/incorporated into the Preliminary Test and Evaluation Matrix (Appendix A) and the Test Descriptions (Appendix B). Revision 01 also updates descriptions of the Mined Geologic Disposal System Test and Evaluation Program objectives and goals, the organization and responsibilities, general test planning, and the Mined Geologic Disposal System Testing. Discussions of requirements have been updated to incorporate the most current requirement documentation that was used to perform the test planning analysis reflected in Revision 01.
1, DCN 1	03/31/98	Test Director will report to the Office of the Assistant General Manager.
2	06/05/98	The Monitored Geologic Repository Test and Evaluation Plan (Revision 02) updates Revision 01, DCN 1 by changing the title of the deliverable to Monitored Geologic Repository Test and Evaluation Plan and changed all references in the document accordingly. Editorial changes were made to sections describing test objectives, test organization and test area descriptions. References were also updated to reflect current formatting and referencing conventions.

INTENTIONALLY LEFT BLANK

EXECUTIVE SUMMARY

This *Monitored Geologic Repository Test and Evaluation Plan* is a description of the test and evaluation process for the Monitored Geologic Repository and is a sub-tier document of the *OCRWM Test and Evaluation Master Plan* (DOE 1995b). This plan was developed through the use of integrated product development team supported by each major functional area (i.e., Surface Design, Subsurface Design, Quality Assurance, Waste Package Operations, Performance Assessment, Licensing, Environment Safety and Health, Natural Environment, and Systems Engineering).

The *OCRWM Test and Evaluation Master Plan* (DOE 1995b) states four general objectives for the Monitored Geologic Repository Test and Evaluation Program: support system design and development; verify compliance with requirements; evaluate the operational suitability and effectiveness of the system; and support the implementation of regulatory requirements. This *Monitored Geologic Repository Test and Evaluation Plan* defines the processes, organizational structure, and test and evaluation functions necessary to meet these objectives.

This *Monitored Geologic Repository Test and Evaluation Plan* discusses how the tests are defined, designed, and conducted and how data from those tests are evaluated against performance, function, design, and regulatory requirements. Each stage of the process is explained and supported by a detailed process flow diagram. A Management and Operating Contractor Test Organization is defined, establishing test support and working groups to oversee and manage the Monitored Geologic Repository Test and Evaluation Program functions as depicted in Figure ES-1 and described below. This organization will interface with the U.S. Department of Energy.

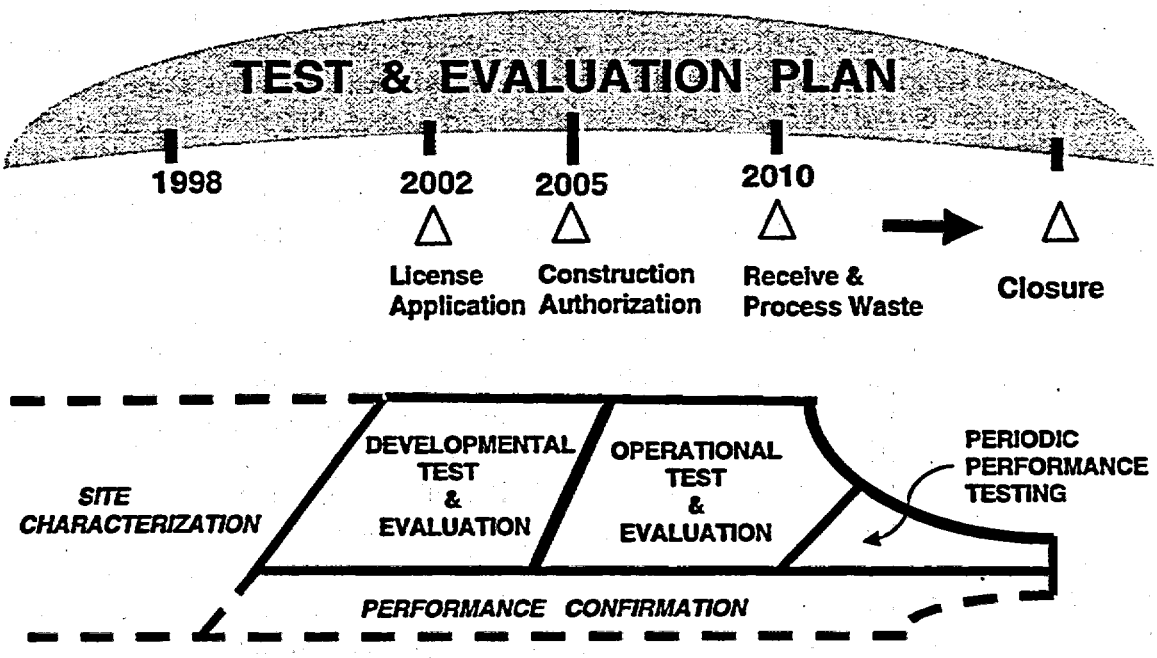

Figure ES-1. Overview - MGR T&EP

The Monitored Geologic Repository Test and Evaluation Program functions include: confirming by test and analysis the suitability of the Yucca Mountain site for housing a geologic repository; testing of design concepts to reduce development risk; verifying structures, systems, and components compliance with design requirements and specifications; performing system testing to validate Monitored Geologic Repository requirements including the receipt, handling, retrieval, and disposal of waste; conducting periodic performance testing to verify preclosure requirements and demonstrate safe and reliable Monitored Geologic Repository operation; and performing modeling, test, and analysis to verify postclosure regulatory requirements. To perform these functions, the Monitored Geologic Repository System Test and Evaluation Program is divided into five major functional areas:

- Site Characterization
- Developmental Test and Evaluation
- Operational Test and Evaluation
- Periodic Performance Testing
- Performance Confirmation

Site characterization test and evaluation objectives are to determine if the Yucca Mountain site possesses characteristics adequate to isolate radioactive waste, considering NRC requirements for public health and safety. In addition, conceptual designs for the waste package and for the repository are developed during site characterization. Test and evaluation categories considered during this phase include geology, geohydrology, geochemistry, geomechanics, thermal characteristics, erosion, tectonics, human interference, radiological monitoring, climate, surface characteristics, and seal and waste package characteristics.

Developmental Test and Evaluation includes development testing to support design and reduce development risks and qualification testing to verify compliance with specifications and regulatory requirements. Development testing is used to confirm design concepts, evaluate alternative design concepts, provide design documentation, and show the availability of needed technology. Development testing activities can involve modeling, analysis and the fabrication of scaled engineering models. Qualification testing is used to verify that the design satisfies the design requirements and that the design is adequate for performing within Monitored Geologic Repository specifications.

Operational Test and Evaluation is conducted to test and evaluate the operational suitability and effectiveness of the repository, its compliance with design/licensing-basis requirements, its compliance with the design, and its impact on the environment while operational. It includes integration and system testing and demonstration beginning with the authorization to construct the repository and ending with the successful completion of the startup test. These tests and demonstrations involve operational procedures and personnel. A final pre-operational test and a startup test will be performed on the entire Monitored Geologic Repository and will combine all the structures, systems, and components, utility systems, facilities, and processes required to receive, prepare, emplace, and move waste (e.g., for recovery or retrieval, if required).

Periodic Performance Testing will support the continuing verification of preclosure requirements and will provide those functions and processes necessary to ensure the safe handling of radioactive

material and to mitigate the risk of accident and exposure in manned activities during the operational phase. These test requirements may be specified as part of the license to receive waste, 10 CFR 60, 10 CFR 20, other federal and state codes and regulations, manufacturer operations and maintenance manuals, or as an item of critical importance in a waste processing flow.

Performance Confirmation activities will support verification of postclosure requirements. Monitoring, test, and analysis activities will be conducted to assess the accuracy and adequacy of the information used in licensing to determine whether the performance objectives for the period after permanent closure will be met. These activities will increase as the scientific site characterization activities decrease (see Figure ES-1) and will continue until closure of the repository. Although current Monitored Geologic Repository requirements dictate that the long-term performance of the system will not be dependent upon continued post-closure monitoring, the capability to continue such monitoring will be available.

For the functional test areas described above, this *Monitored Geologic Repository Test and Evaluation Plan* provides a description of subordinate test categories, and supporting test types. Development and major system integration tests are described and associated requirements are identified. A preliminary integrated test schedule showing *Monitored Geologic Repository System Test and Evaluation Plan* activities and Monitored Geologic Repository milestones is also provided.

The *Monitored Geologic Repository Test and Evaluation Plan* reflects the extent of test planning and analysis that can be reasonably conducted given the current status of the Monitored Geologic Repository requirements and latest Viability Assessment design information. The intent is to revise this *Monitored Geologic Repository Test and Evaluation Plan* prior to the License Application such that it contains the necessary detail to meet the needs of supporting the appropriate sections in the License Application in accordance with 10 CFR 60.21(c)(14), (15)(iv), and (15)(v).

INTENTIONALLY LEFT BLANK

CONTENTS

Page

1. INTRODUCTION 1-1

2. REQUIREMENTS 2-1
2.1 DESIGN DEVELOPMENT AND OPERATIONS 2-1
2.2 QUALITY ASSURANCE 2-2
2.3 REGULATORY 2-2

3. MONITORED GEOLOGIC REPOSITORY TEST AND EVALUATION PLAN 3-1
3.1 PURPOSE 3-1
3.1.1 Objectives 3-1
3.1.2 Oversight and Implementation 3-2
3.2 TEST AREAS 3-3
3.2.1 Site Characterization 3-3
3.2.2 Performance Confirmation 3-4
3.2.3 Developmental Test and Evaluation 3-5
3.2.3.1 Development Testing 3-6
3.2.3.2 Qualification Testing 3-6
3.2.4 Operational Test and Evaluation 3-6
3.2.5 Periodic Performance Testing 3-7
3.3 SCOPE 3-7
3.3.1 Organization of Plan 3-7
3.4 RISK MANAGEMENT AND TECHNICAL PERFORMANCE MEASUREMENT 3-7
3.4.1 Risk Identification 3-10
3.4.2 Risk Assessment 3-10
3.4.3 Risk Mitigation 3-13
3.5 GENERAL TEST PLANNING 3-13
3.5.1 Organization, Administration, and Reporting Responsibilities 3-13
3.5.1.1 Initial Test Planning Implementation 3-14
3.5.1.2 Test Planning, Conduct, and Reporting Implementation 3-14
3.5.2 Test Planning, Conduct, Analysis and Reporting 3-16
3.5.2.1 Verification Scenario Selection Process 3-25
3.5.2.2 Verification By Test or Demonstration 3-28
3.5.2.2.1 Development Testing 3-28
3.5.2.2.2 Qualification Testing 3-31
3.5.2.2.3 System Testing 3-31
3.5.2.2.4 Test Planning and Conduct Responsibility 3-31
3.5.2.3 Detailed Test/Demonstration Planning 3-32
3.5.2.4 Anomaly Report Flow 3-35
3.5.2.5 Verification by Analysis 3-37
3.5.3 Confirmation Verification Matrix 3-38

3.5.4 Quality Assurance Controls 3-38
3.5.5 Integration with YMP 3-39
3.6 MGR TESTING 3-39
3.6.1 Developmental Test and Evaluation 3-39
3.6.1.1 Development Testing 3-40
3.6.1.2 Qualification Testing 3-40
3.6.2 Operational Test and Evaluation 3-41
3.6.3 Periodic Performance Testing 3-44
3.6.4 Test and Evaluation Matrix 3-44
3.6.5 Test Description 3-45
3.7 INTEGRATED TEST SCHEDULE 3-47
3.8 CONCLUSIONS 3-48

4. REFERENCES 4-1
4.1 DOCUMENTS CITED 4-1
4.2 DIRECTIVES 4-2
4.3 TEST IDENTIFICATION REFERENCES 4-2

5. ACRONYMS AND ABBREVIATIONS 5-1

APPENDIX A-PRELIMINARY TEST AND EVALUATION MATRIX A-1

APPENDIX B-TEST DESCRIPTIONS B-1

TEST 1 Scientific Investigation: Drift Scale Test (In Situ Thermal Test) B-3

TEST 2 Scientific Investigation: Seismic Effects on Natural and Engineered Barriers B-7

TEST 3 Scientific Investigation: Engineered Barrier System Component Testing B-11

TEST 4 High Level Waste Glass Alteration and High Level Waste Performance Under Unsaturated Conditions Laboratory Tests B-15

TEST 5 Spent Nuclear Fuel Oxidation Response Laboratory Tests B-17

TEST 6 Spent Nuclear Fuel Performance Under Flow-through and Saturated Conditions Laboratory Tests B-19

TEST 7 Laboratory Tests: Long-Term Barrier Materials Performance, Metal Barrier Long-Term Corrosion Testing, Microbiologically Influenced Corrosion, and Selected Corrosion Testing Studies B-21

TEST 8 Humid Air Corrosion Laboratory Tests B-25

TEST 9 Electrochemical and Stress-Corrosion Cracking Performance Laboratory Tests B-29

TEST 10 Basket Materials Performance Test Laboratory Tests B-31

TEST 11 Waste Package Closure Methods Laboratory Tests B-33

TEST 12 Waste Package Nondestructive Examination Methods Laboratory Tests B-37

TEST 13 Waste Package Fabrication Process Laboratory Tests B-41

TEST 14 Waste Package Operations Phase II Laboratory Tests B-43

TEST 15 Waste Package Quarter Scale and Modified Quarter Scale Mockup Tests B-45

TEST 16 Laboratory Test: Subsurface Communication Technologies B-47

TEST 17 Laboratory Test: Remote Vehicle Control Systems B-49

TEST 18 Laboratory Test: Digital Instrumentation for Monitoring and Control B-51

TEST 19 Laboratory Test: Power Sources for Mobile Subsurface Vehicles B-53

TEST 20 Laboratory Test: High Temperature Electronics B-55

TEST 21 Laboratory Test: Electronics for Elevated Radiation Environment B-57

TEST 22 Laboratory Test: Technology Integration B-59

TEST 23 Mockup: Transport Locomotive, with Remote Operations Control Station B-61

TEST 24 Mockup: Emplacement Gantry, with Remote Operations Control Station B-63

TEST 25 Mockup: Waste Package Loading/Unloading Mechanism with Remote Operations Control Station B-65

TEST 26 Waste Package Transporter Functions Mockup Test B-67

TEST 27 Gantry Transfer Functions Mockup Test B-69

TEST 28 Gantry Operations Mockup Test B-71

TEST 29 Cask/Dual Purpose Canister Cool-Down Laboratory Tests B-73

TEST 30 Dual Purpose Canister Underwater Opening Laboratory Tests B-77

TEST 31 Pool (Underwater) Basket Handling Laboratory Tests B-81

TEST 32 Disposal Container Helium and Nitrogen Inerting Laboratory Tests B-85

TEST 33 Optimizing Waste Handling Operations for ALARA Laboratory Tests B-89

TEST 34 Supercompaction of Low-Level Waste Laboratory Tests B-93

TEST 35 Systems Integration Test - Waste Emplacement System (SS17) B-95

TEST 36 System Integration Test - Assembly Transfer System (SU10) B-97

TEST 37 Systems Integration Test - Canister Transfer System (SU11) B-99

TEST 38 The Startup Test of the MGR B-101

APPENDIX C-DRAFT TEST AND EVALUATION PLAN TEST SCHEDULE C-1

FIGURES

Page

3-1 Overview - MGR T&EP 3-3
3-2 Site Characterization Interaction with the MGR T&EP 3-4
3-3 Performance Confirmation Interaction with the MGR T&EP 3-5
3-4 Risk Management Process 3-9
3-5 Risk Area Sheet 3-11
3-6 Example Technical Performance Measurement Report 3-12
3-7 How the M&O Test Organization will use the T&EP 3-15
3-8 Verification Scenario Selection Process 3-17
3-9 Verification by Test or Demonstration 3-18
3-10 Test Scenario Flow 3-19
3-11 Anomaly Report Flow 3-21
3-12 Verification By Analysis Flow 3-22
3-13 Proof of Concept Design Process 3-23
3-14 Monitored Geologic Repository T&EP Test Areas 3-24

TABLES

Page

3-1 MGR Q-List Items 3-39
3-2 Developmental Test and Evaluation Test Categories 3-40
3-3 Operational Test and Evaluation Test Categories 3-42

A-1 Test Type A-2
A-2 Preliminary Developmental and Operational Test and Evaluation Matrix A-4
A-3 Preliminalry Periodic Performance Test and Evaluation Matrix A-8

INTENTIONALLY LEFT BLANK

1. INTRODUCTION

The Monitored Geologic Repository (MGR) Test and Evaluation Program will plan, conduct, and document the testing, analyses, and demonstrations necessary to verify MGR requirements and processes for a safe geologic repository for high-level radioactive waste. This comprehensive program addresses all aspects of the test requirements. The program provides assurance that the repository was designed to meet these requirements, that the repository will perform as designed and that the barriers will perform as expected, and it develops supporting documentation for demonstrating satisfactory repository operation.

This *Monitored Geologic Repository Test and Evaluation Plan* (MGR T&EP) presents a systematic approach to be used by the U.S. Department of Energy (DOE) and the Civilian Radioactive Waste Management System (CRWMS) Management and Operating Contractor (M&O) to ensure that selected verification methods are complete, compatible, nonredundant, and add value to the test program. The organizational structure and processes established by the MGR T&EP will be used by the CRWMS M&O Test Organization to define, design, conduct, analyze, and document MGR testing.

The MGR T&EP reflects the extent of test planning and analysis that can be reasonably conducted given the current status of the MGR requirements and latest Viability Assessment design information. This test plan will be updated as the MGR requirements and design development progresses to the extent that warrants refinement and increased detail in test identification, description, and planning. The intent is to revise this MGR T&EP prior to License Application such that it contains the necessary detail to meet the needs of supporting the appropriate sections in the license application in accordance with 10 CFR 60.21(c)(14), (15)(iv) and (15)(v).

INTENTIONALLY LEFT BLANK

2. REQUIREMENTS

This MGR T&EP discusses how the MGR tests, demonstrations, and analyses are defined, designed, and conducted. It also discusses how data from those tests are evaluated against performance limits, conformance with design, and functional, design, and regulatory requirements. These requirements are derived from Office of Civilian Radioactive Waste Management (OCRWM) laws and regulations such as the *Nuclear Waste Policy Act, as Amended with Appropriations Acts Appended* (DOE 1995a) codes and standards, and organizational policies such as DOE Orders. This section provides a summary description of the requirements, the documents utilized for the MGR test planning process (see Section 3.5), and test identification activities (see Section 3.6 and Appendix B).

Section 3.5 of this MGR T&EP describes, in detail, the process of test planning by which requirements are verified through the development and implementation of detailed test plans or analyses. Section 3.6 and Appendix B identify MGR tests where the Section 3.5 approach is applied, given the current status of MGR requirements and design development. The preliminary set of MGR requirements that are referenced in these sections is listed below. A complete set of MGR requirements will be baselined for all the structures, systems, and components (SSCs) prior to the License Application. The MGR T&EP will be updated to the extent that warrants refinement, as the MGR requirements and design development progresses.

2.1 DESIGN DEVELOPMENT AND OPERATIONS

The *Civilian Radioactive Waste Management System Requirements Document* (DOE 1996) specifies the top-level requirements for the CRWMS M&O. This document establishes requirements for the design, development, and operation of the repository. It specifically addresses the top-level governing laws and regulations (e.g., 10 CFR 60, 10 CFR 71, etc.) along with specific policies, performance requirements, internal and external interface requirements, and system architecture. This document and the subordinate CRWMS M&O requirements documents listed below are the foundation for the test planning analysis activities described in Section 3.5.2. These documents also provide the source for developing the test requirements and objectives contained in Appendix B.

- The *Mined Geologic Disposal System Requirements Document* (YMP 1998) is a flow down document from the *Civilian Radioactive Waste Management System Requirements Document* (DOE 1996) described above. This document depicts the functions to be performed by, and the requirements for, the MGR. The objective of this document is to define the performance and system requirements for the development of the MGR, including the Waste Handling System, Waste Isolation System, and the Operational Support System.

- The *Controlled Design Assumptions Document* (CRWMS M&O 1998) provides the documentation and control of the MGR design assumptions. This document supplements the current technical baseline documents of the MGR until all assumptions and requirements are incorporated in the technical baseline. The document lists each assumption, identifies its rationale and design responsibility, and tracks its development.

- The *Mined Geologic Disposal System Functional Analysis Document* (CRWMS M&O 1996a) establishes a controlled system-level function analysis with corresponding function flow diagrams, function dictionary, function-to-physical-architecture allocations, and system performance requirements derivation and allocation.

- The *Mined Geologic Disposal System Concept Of Operations* (1997a) provides an integrated, conceptual description of the system and its operations. The objective of this document is to facilitate a common understanding of the MGR operations among system planners, developers, and implementors. This document describes the concept of operation of the MGR and captures design concept decisions.

The MGR requirements allocation process is currently being conducted. This process will identify and allocate requirements to System Description Documents (SDDs). The SDDs will present specific design requirements and describe how the design satisfies these requirements. The SDDs will include design requirements and a complete description of the system design features such as flow path and performance; system operating and design parameters; system arrangement; component principal design features; and system operation, maintenance, and quality requirements. As this allocation process matures, validated requirements and constraints will be fed into the test planning analysis process (described in Section 3.5) to facilitate test verification selection and detailed test definition.

2.2 QUALITY ASSURANCE

In addition to the requirements for MGR design, development, and operations detailed in the above documents, the MGR T&EP is also based on and consistent with the quality assurance (QA) requirements described in the *Quality Assurance Requirements and Description* (QARD) (DOE 1997). A *Conduct of Activities* (QAP-2-0) evaluation determined that the MGR T&EP is subject to QARD requirements because certain testing, as described in the MGR T&EP, will be used to verify the design/license basis of the MGR *Q-List* (YMP 1997) items. This list is developed and revised according to *Classification of Permanent Items* (QAP-2-3). Quality Administrative Procedures, Nevada Work Instructions, and Nevada Line Procedures will be prepared as required to implement the requirements of Section 11 of the QARD.

Computer software models and simulations used to verify requirements will comply with *Computer Software Qualification* (QAP-SI-0), and *Software Configuration Management* (QAP-SI-3).

2.3 REGULATORY

The MGR T&EP will comply with U.S. Nuclear Regulatory Commission (NRC) regulations that drive and are the basis for the test and evaluation activities described in the MGR T&EP. These requirements are captured in the program- and project-level requirements documents and are stated in the following Codes of Federal Regulation (CFR):

- **10 CFR 60.21(c)(14)** relates to the content of the Safety Analysis Report (SAR) and states: "For structures, systems, and components important to safety and for the engineered and natural barriers important to waste isolation, DOE shall provide a detailed description of

the programs designed to resolve safety questions, including a schedule indicating when these questions would be resolved."

- **10 CFR 60.21(c)(15)(iv)** relates to the content of the SAR and requires "plans for startup activities and startup testing."

- **10 CFR 60.21(c)(15)(v)** relates to the content of the SAR and requires "plans for conduct of normal activities, including. . .periodic testing of structures, systems, and components. . ."

- **10 CFR 60.24(b)(2)** relates to updating the licensing application and requires updates based on SSCs construction conformance with the design.

- **10 CFR 60.24(b)(3)** relates to updating the licensing application and requires updates based on the results of research programs carried out to confirm the adequacy of designs.

- **10 CFR 60.44** governs the review of any new test to ensure that the test does not create conditions outside the facility's licensing basis.

- **10 CFR 60.74** requires that tests deemed appropriate by the NRC must be performed and must include a Performance Confirmation program conducted in accordance with Subpart F. As defined in 10 CFR 60.2, Performance Confirmation means the program of tests, experiments, and analyses conducted to evaluate the accuracy and adequacy of the information used to determine whether the performance objectives for the period after permanent closure will be met.

INTENTIONALLY LEFT BLANK

3. MONITORED GEOLOGIC REPOSITORY TEST AND EVALUATION PLAN

3.1 PURPOSE

The MGR T&EP describes the organizational structure and planning process for the MGR test and evaluation activities. This MGR T&EP includes the groups and subgroups to be charged with review, approval, and oversight responsibility for all MGR test and evaluation activities, the duties and responsibilities of key personnel in the management structure, as well as those charged with test planning, test conduct, and data analysis.

The MGR T&EP uses the latest Viability Assessment design information to identify areas requiring development testing, and updates to the extent possible the test identification and description sheets provided in Appendix B. These test description sheets identify those SSCs that require research and development and describe testing to support detailed design and reduce design risks.

The MGR T&EP reflects the extent of test planning and analysis that can be reasonably conducted given the current status of the MGR requirements and design development. This MGR T&EP will be updated to the extent that warrants refinement, as the MGR requirements and design development progresses. The intent is to revise this MGR T&EP prior to the License Application so that it contains the necessary detail to meet the needs of supporting the appropriate sections in the License Application in accordance with 10 CFR 60.21(c)(14), (15)(iv) and (15)(v).

3.1.1 Objectives

The *OCRWM Test and Evaluation Master Plan* (DOE 1995b) states four general objectives for the MGR Test and Evaluation Program: support system design and development; verify compliance with requirements; evaluate the operational suitability and effectiveness of the system; and support the implementation of regulatory requirements.

To meet these objectives:

- Test and evaluation activities shall be implemented early in the development phase to support a detailed design and reduce design risks. Development testing shall be conducted to confirm design concepts, evaluate alternative design concepts, provide design documentation, and show the availability of needed technology. A detailed description of development test planning process is contained in Section 3.5.2.2.1. Appendix B provides a summary of development tests that were identified as a result of applying this planning process to the MGR. Technical performance measurements shall be developed, quantifying key performance requirements, and shall be tracked to identify design concept risks. A structured risk management process shall be implemented to assess these risk and conduct risk mitigation for all critical program risks. A discussion of risk management and technical performance measurement is contained in Section 3.4.

- Adequate qualification testing shall be implemented to verify that the design satisfies the design requirements and that the design is adequate for performing within MGR specifications. Qualification testing includes planning, conducting, and documenting the

lower level functional tests that are conducted by the vendor (i.e., subcontractor responsible for the detailed design, and the production and installation support of the SSCs) with M&O oversight. Test requirements shall be documented in the vendor's specifications. Qualification test results shall be reviewed by the M&O and recorded in a confirmation verification matrix. This matrix will track and document verification performed according to MGR requirements. A description of implementation of qualification testing is contained in Section 3.6.1.2 .

- Adequate component, element, and systems integration testing shall be planned, conducted, and recorded to validate MGR requirements including the receipt, handling, retrieval, and disposal of waste. Operational test and evaluation shall be conducted to test and evaluate the operational suitability and effectiveness of the repository, its compliance with design/licensing-basis requirements, its compliance with the design, and its impact on the environment while operational. It includes integration and system testing and demonstration beginning with the authorization to construct the repository and ending with the successful completion of the startup test. A final pre-operational test and a startup test shall be performed on the entire MGR and will combine all the structures, systems, and components, utility systems, facilities, and processes required to receive, prepare, emplace, and move waste (e.g., for recovery or retrieval, if required). Section 3.5 describes the general test planning to define and implement these test activities. Appendix B contains a description of major system integration and startup test activities.

- Performance confirmation and periodic performance testing shall be conducted to support the verification of regulatory requirements. Performance confirmation testing and analysis shall support the verification of postclosure requirement. As part of the Performance Confirmation Program (See Section 3.2.2), data from engineered and natural systems shall be obtained to confirm that the natural and engineered systems and components required for repository operations or those designed to operate as barriers after permanent closure are functioning as intended or anticipated. Periodic performance testing will be conducted to support the verification of compliance with preclosure requirements and shall provide those functions and processes necessary to ensure that high-level waste can be received, handled, packaged, stored, emplaced, and retrieved without exceeding regulatory requirements. Implementation of periodic performance testing is discussed in Section 3.6.3.

3.1.2 Oversight and Implementation

An M&O test organization shall be formed and charged with the responsibility of implementing testing and evaluation as defined in the MGR T&EP. This organization will ensure that the objectives stated in Section 3.1.1 are met and that all test and evaluation activities are performed under appropriate QA, management, and technical controls to ensure the validity of the information to adequately support the licensing process and licensed operation.

The M&O test organization shall work with the DOE test organization in order to facilitate coordination, oversight, and monitoring of the test planning activities and functions described in this document. A description of the M&O test organization leadership, support and working groups is contained in Section 3.5.1.

3.2 TEST AREAS

The MGR Test and Evaluation Program functions include: confirming by test and analysis the suitability of the Yucca Mountain site for housing a geologic repository; investigating and documenting design concepts to reduce risk; verifying SSC compliance with design requirements and specifications; performing system testing to validate compliance with MGR requirements which includes the receipt, handling, retrieval, and disposal of waste; conducting periodic performance testing to verify pre-closure requirements and to demonstrate safe and reliable MGR operation; and performing modeling, testing, and analysis to verify adherence to postclosure regulatory requirements. To perform these functions, the MGR Test and Evaluation Program is divided into five major functional areas: site characterization, performance confirmation, developmental test and evaluation, operational test and evaluation, and periodic performance testing (see Figure 3-1).

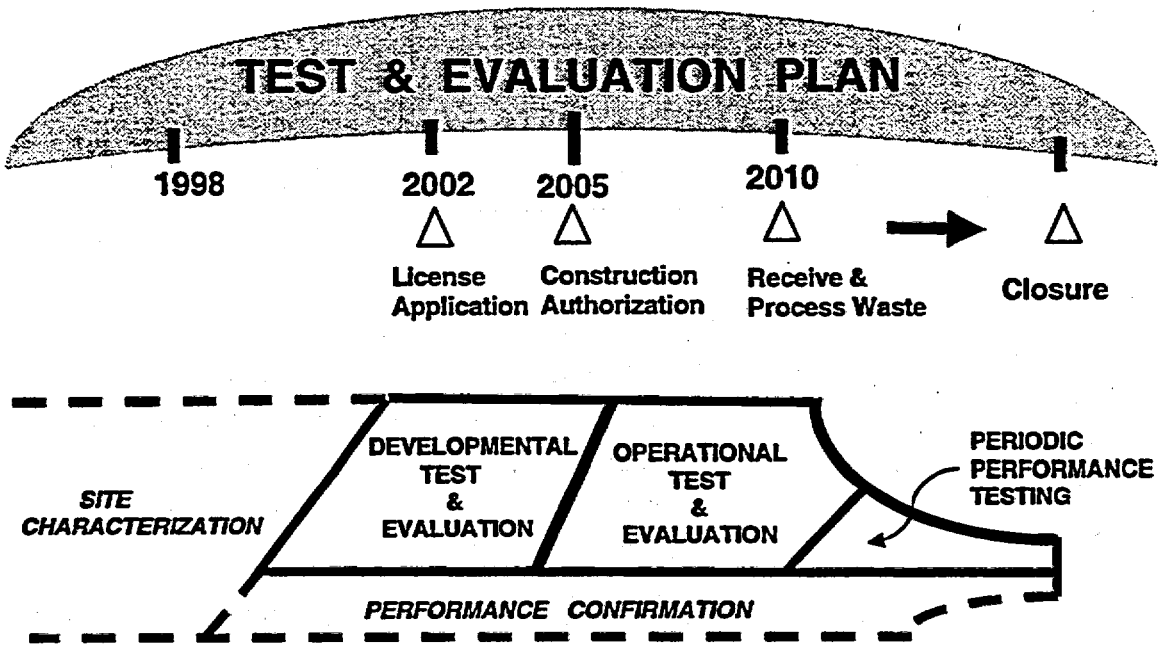

Figure 3-1. Overview - MGR T&EP

3.2.1 Site Characterization

Site characterization includes the activities necessary to collect data and evaluate the characteristics of the site; to predict and assess the performance of the natural and engineered barriers; to prepare conceptual repository designs; to predict and assess system performance; to prepare the Environmental Impact Statement and the Viability Assessment and support its review; and to plan the remainder of activities to characterize the site. During this phase, the exploratory studies facility was constructed, and various surface and underground site-related tests were conducted.

Site characterization test and evaluation objectives are to determine if the Yucca Mountain site possesses characteristics adequate to isolate radioactive waste, considering NRC requirements for public health and safety. In addition, conceptual designs for the waste package and for the repository

are developed during site characterization. Test and evaluation categories considered during this phase include geology, geohydrology, geochemistry, geomechanics, thermal characteristics, erosion, tectonics, human interference, radiological monitoring, climate, surface characteristics, and seal and waste package characteristics.

The above objectives and test categories are subject to the procedures specified by Testing Field Work Packages (YAP-5.7Q), and therefore are not governed by the planning, testing and analysis described in Section 3.5 of the MGR T&EP. Test design and planning activities for site tests are conducted within Natural Environment Program Operations (NEPO). Implementation of these tests is coordinated by the Test Coordination Office (an existing organization within NEPO). As depicted in Figure 3-2, the MGR T&EP will support continuing site testing and insure that results are incorporated into the test planning activities for developmental tests.

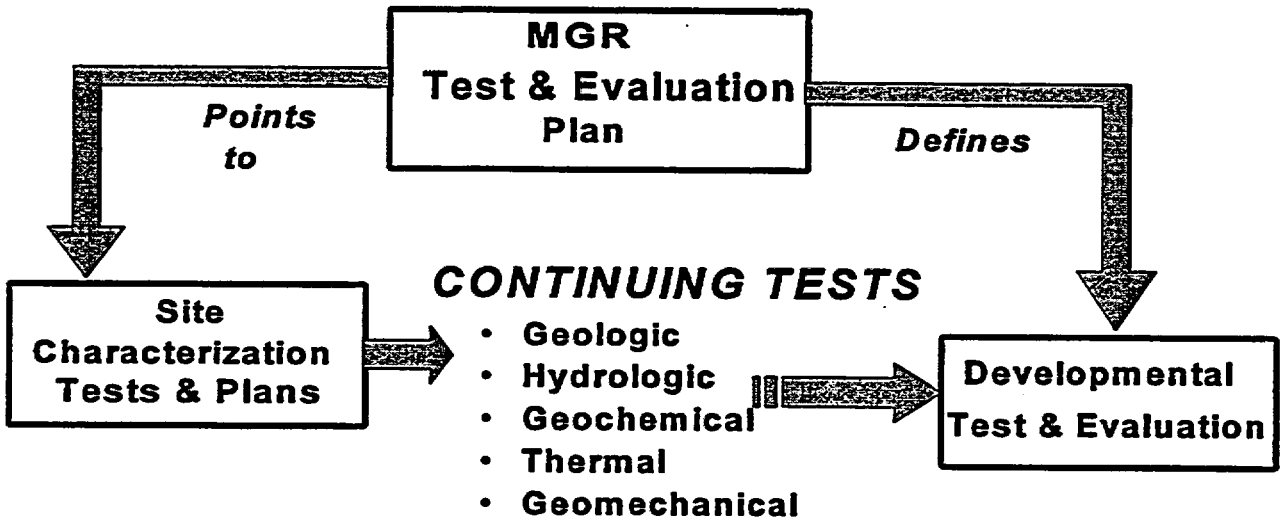

Figure 3-2. Site Characterization Interaction with the MGR T&EP

3.2.2 Performance Confirmation

The MGR Performance Confirmation Program tests and evaluates the natural, and engineered barrier system's postclosure waste containment and isolation performance. Performance confirmation relies on in situ monitoring, field and laboratory tests, and experiments to collect data during repository construction and operation, which are used to confirm predictions, evaluate preclosure performance, recommend corrective actions, and support the license amendment for permanent closure. Performance confirmation test and evaluation activities include process modeling, performance predictions, site monitoring and testing, waste package materials monitoring and testing, repository monitoring and testing, test data analysis, evaluation, and performance assessment. Performance confirmation is a continuing effort that begins during the site characterization activities. It will continue with model development and verification and data gathering activities during MGR development and will be managed by the test support group. Although current MGR requirements

dictate that the long term performance of the system will not be dependent upon continued post-closure monitoring, the capability to continue such monitoring will be available.

The MGR Performance Confirmation Program objectives and tests are subject to planning and responsibilities defined in the *Performance Confirmation Plan* (CRWMS M&O 1997b) and therefore are not governed by the test, planning, conduct, and analysis described in Section 3.5 of the MGR T&EP (see Figure 3-3 below). The purpose of the *Performance Confirmation Plan* is to specify monitoring, tests, and analysis activities to be conducted for evaluating the accuracy and adequacy of the information used in the License Application and to determine that the performance objectives for the period after permanent repository closure will be met. MGR test and evaluation planning will ensure that the MGR provides performance confirmation data (Figure 3-3). Periodic performance and performance confirmation test activities shall be coordinated in order to maximize effectiveness and minimize cost and schedule impacts.

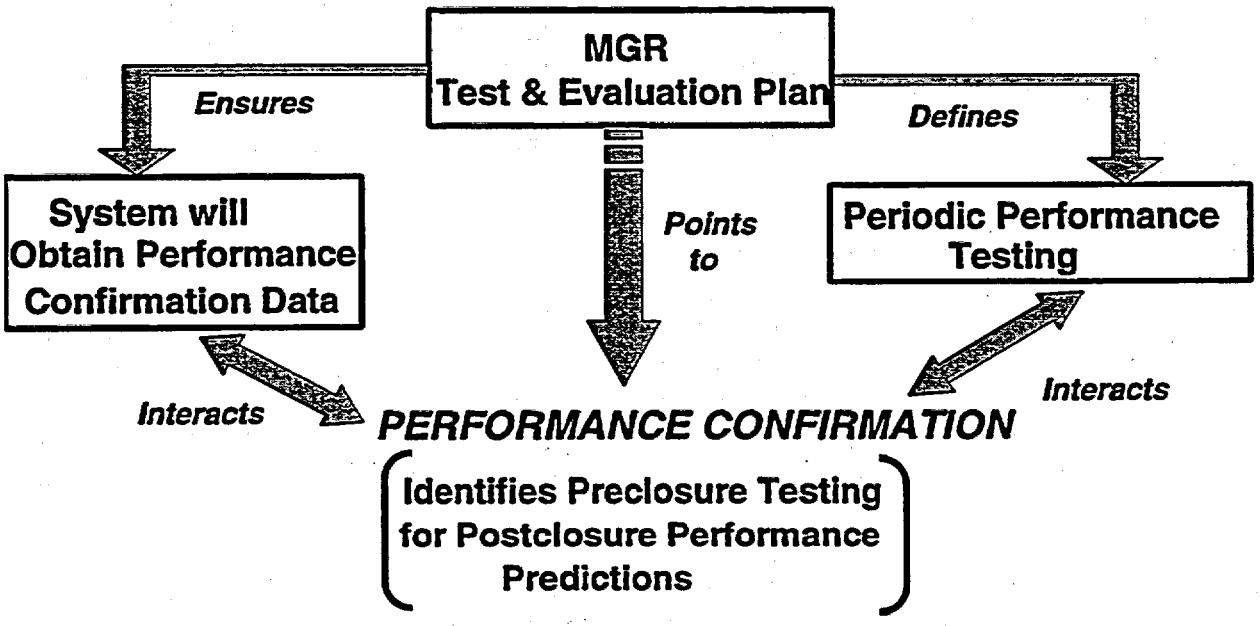

Figure 3-3. Performance Confirmation Interaction with the MGR T&EP

3.2.3 Developmental Test and Evaluation

Developmental test and evaluation includes development testing to support a detailed design and reduce design risks, qualification testing to verify design compliance with requirements and specifications, and to verify compliance with specifications and regulatory requirements.

3.2.3.1 Development Testing

Development testing is used to confirm design concepts, evaluate alternative design concepts, and show the availability of needed technology. Development testing activities can involve modeling, analysis and the fabrication of scaled engineering models. These tests are planned and conducted by the design organization as part of the design process. Technical performance measurements are developed that quantify key performance requirements which are then tracked to manage design and development risks. Section 3.4 provides a discussion of technical performance measurements.

3.2.3.2 Qualification Testing

This type of testing is used to verify that the design satisfies the requirements and that the design is adequate for performing within MGR specifications. The tests are normally planned and conducted by the design organization with the concurrence of the QA organization. *Design Verification* (QAP-3-2), Section 5.6 establishes the requirements for developing, conducting, and coordinating design verification qualification testing. Qualification testing includes planning, conducting, and documenting the lower level functional tests that are conducted by the vendor with M&O oversight (i.e., subcontractor responsible for the detailed design, and the production and installation support of the SSCs); hence, test requirements must be documented in the vendor's specifications. Developmental test and evaluation shall continue into the operational test and evaluation phase and end prior to repository operation.

3.2.4 Operational Test and Evaluation

Operational test and evaluation tests and evaluates the operational performance of the repository, its compliance with design- and licensing-basis requirements, the product compliance with the design, and its impact on the environment while operational. It includes integration and system testing beginning with the authorization to construct the repository and ending when each of the operational test and evaluation objectives has been met. These tests and analyses involve operational procedures and personnel.

The operational test and evaluation combines SSCs and the facilities, by functionality, into a series of tests called systems integration tests that begin testing the complex processes of receiving, preparing, emplacing, and retrieving waste. After all of the components and flow processes of the MGR have successfully been verified and after systems integration tests anomalies, if any, have been resolved, the entire MGR shall be subjected to a conformance test and demonstration during a final pre-operational test. The final verification of the MGR performance against these requirements is a major outcome of this test.

The startup test shall be performed on the entire MGR and shall combine all the SSCs, utility systems, facilities, and processes required to receive, prepare, emplace, and move waste (e.g., for recovery or retrieval, if required). The startup test shall be conducted by trained operators and shall be performed using approved operational procedures.

3.2.5 Periodic Performance Testing

This test function shall support the verification of system performance with preclosure requirements and shall provide those functions and processes necessary to ensure the safe handling of radioactive material, and mitigate the risk of accident and exposure in manned activities during the operational phase. These test requirements may be specified as part of the license to receive waste, 10 CFR 60, 10 CFR 20, and other federal and state codes and regulations, manufacturer operations and maintenance manuals, or as an item of critical importance in a waste processing flow. The M&O test organization shall plan and document the test requirements, including the development of the detailed test procedures for each unit under test. Selected test procedures shall be demonstrated during the startup test. Implementation of periodic performance testing shall commence with the successful completion of the startup test.

3.3 SCOPE

The MGR T&EP is the top level document for all MGR requirement verification activities and provides the outline for the test planning analysis process. The MGR T&EP describes the process required for planning, conducting, and reporting the scenarios to be verified at the SSC level generally either via test, demonstration, or analysis methodologies. This plan describes the MGR verification program, the organization and responsibilities of the program participants, the philosophy and reporting requirements for the verification program, and a preliminary description of the major tests and the critical test requirements allocated to each test.

3.3.1 Organization of Plan

Section 3.4 describes the risk management process, including risk identification and assessment, technical performance measurement, and risk mitigation. Section 3.5 describes general test planning, including the verification scenario selection process, the scenario selection criteria, the verification methodology, the level of verification required for each scenario, and the management organization to define and manage the Test and Evaluation Program activities. Section 3.6 shall reflect the outcome of applying the approach described in Section 3.5 to the MGR. Section 3.7 develops the integrated test schedules, including those MGR tests identified where the approach in Section 3.5 is applied to the MGR.

3.4 RISK MANAGEMENT AND TECHNICAL PERFORMANCE MEASUREMENT

As stated in Section 3.1.1, one of the objectives of the MGR T&EP is to support system design and development. To meet this objective, the M&O test organization shall support the implementation of risk management activities as defined in the *Risk Management Program Plan* (YMP 1992).

Risk management is the process which minimizes risks in order to reduce impacts. More specifically, it is the process which identifies and assesses risk, determines and compares the impact levels, formulates plans for mitigation, allocates resources to carry out these plans, and tracks progress against the plans to ensure that mitigation occurs. Risk management complies with 10 CFR 60.21(c)(14) in that it provides a systematic approach to identify and assess areas of high risk to safety and waste isolation. Risk management further supports the licensing process in that it

oversees, monitors, and documents programs designed to resolve high risks. By focusing efforts on areas of high risk to safety and waste isolation, the probability of successfully developing an MGR that meets design specification and complies with regulatory requirements is increased.

The overall risk management process is made up of three major subprocesses: risk identification, risk assessment, and risk mitigation. This process and constituent subprocesses are shown in Figure 3-4.

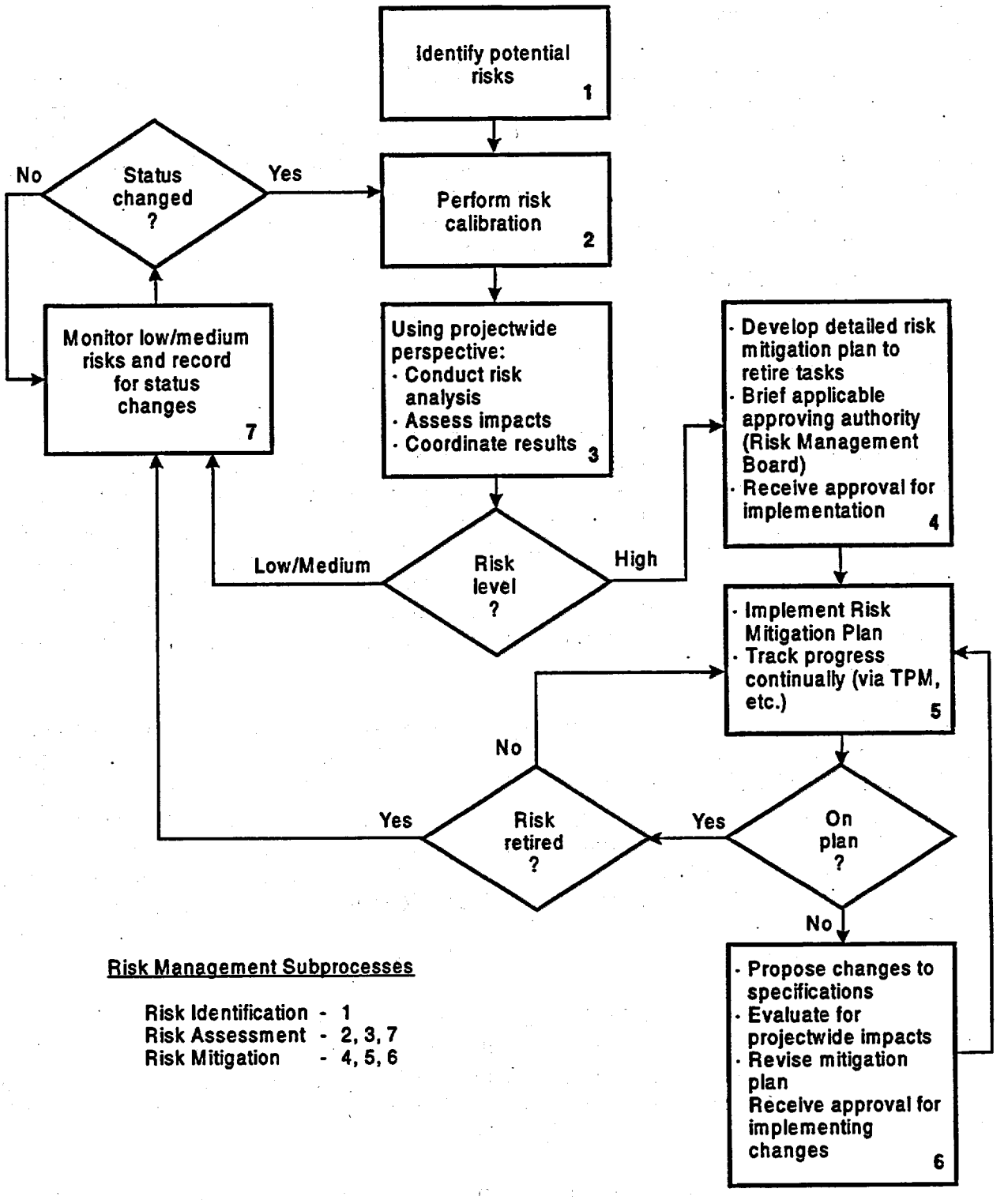

Figure 3-4. Risk Management Process

3.4.1 Risk Identification

Risk identification is the act of compiling a list of technical, cost, and schedule risks that would be detrimental to meeting NRC regulations and licensing requirements, Yucca Mountain Site Characterization Project (YMP) goals, and MGR performance requirements. This is the initial step of the risk management process as depicted in Figure 3-4. The M&O test organization shall activate a risk team early in the design phase to support the risk management process. The risk team will be comprised of subject matter experts in the areas of licensing, design, and operational testing. This team should support design in identifying the SSCs that require research and development in accordance with 10 CFR 60.21(c)(14).

These SSCs may be subject to development testing during design activities. Risks identified during these activities will be summarized on a template referred to as the risk area sheet (Figure 3-5).

Technical performance measurements shall be utilized to assist in the risk identification effort during proof of concept development testing (Section 3.5.2.2.1). A technical performance measurement is a quantitative metric chosen to assess progress by comparing the status of technical parameters against an approved technical performance baseline. A technical performance measurement forms an important portion of design analysis and risk management. It estimates, through engineering analysis and testing, the values of essential performance parameters of current design and alerts management when performance is not meeting expectations. This leads to early risk identification so that a reassessment can be made concerning the allocation of additional resources and pursuing alternate design solutions.

The risk team (Section 3.5.1.1) shall be responsible for assisting designers in the definition of technical performance measurements. After technical performance measurements are established, profiles for technical parameters as a function of time are developed. These profiles are coordinated with the appropriate test working group to ensure that test planning incorporates the appropriate testing to achieve the established profiles. It shall be the responsibility of the risk team to coordinate technical performance measurement testing, analyze and support related activities, and provide a Technical Performance Measurement Report. Figure 3-6 is an example of such a report.

3.4.2 Risk Assessment

Risk assessment is the act of evaluating and reevaluating the identified risks to determine the probability of the events happening, and then fully defining the consequences should they occur. This includes an in-depth analysis of NRC regulations and licensing requirements, YMP goals, MGR performance requirements and the given risks, and often requires modeling risks to better describe and quantify them (see Figure 3-4, Steps 2, 3, and 7).

The risk team shall assist designers in performing a preliminary assessment of risks identified during the identification subprocess. Assessments shall be recorded on the appropriate risk area sheet and coordinated with the test support group. For high risks, preliminary mitigation planning and closure criteria shall be developed. Closure criteria quantifies the goal or goals necessary to retire a high risk to a lower level. The risk area sheet (Figure 3-5) should also be used to summarize this information.

RISK AREA SHEET # - - -

RISK ELEMENT OR COMPONENTS EFFECTED	REVISION # _ _ _ DATE (/ /)
REQUIREMENT IMPACTED	PROJECT ENG:_____ LOCATION: _____ IDENTIFIED BY: _____
WBS # _ _ _ SDD # _ _ _	DATE OPENED: _____
PROBLEM IDENTIFICATION:	
BASIS FOR CLASSIFICATION (LOW, MEDIUM, HIGH):	
MITIGATION PLANNING CLOSURE CRITERIA:	DATE CLOSED (/ /) PM: _ _ _ _

Figure 3-5. Risk Area Sheet

- TECHNICAL PERFORMANCE MEASUREMENT REPORT -

Risk Area Sheet #: _____ Project Eng: _____

WBS #: _____ Evaluator: _____

Parameter Title: _____ Report Date: _____

Current Value: _____ Date Determined: _____

Method: _____

Planned Value: _____ Δfrom Plan: _____

Reaction Limit Value: _____ High or Low: _____

Last Report Value Estimate: _____ Δfrom Last: _____

Next Report Value Estimate: _____ Basis: _____

Replan Required? _____ Trend OK? _____

Comments: _____

_____

_____

_____

_____

Figure 3-6. Example Technical Performance Measurement Report

3.4.3 Risk Mitigation

As depicted in Figure 3-4, risk mitigation involves developing mitigation planning (Step 4) and implementing and tracking mitigation efforts (Steps 5 and 6) to ensure the timely closure of risk. Successful risk mitigation requires the risk management process to:

- Provide for the allocation of YMP resources to implement mitigation planning
- Assign a manager responsible for mitigation efforts
- Establish clear and quantifiable closure criteria
- Track to closure.

In order to facilitate the risk mitigation effort, a Risk Management Board, comprised of YMP managers and subject matter experts, will be identified. The Risk Management Board shall have final authority in determining high risks and approving mitigation plans and closure criteria. Since mitigation planning often involves allocating and reallocating of YMP resources, the Risk Management Board needs to be staffed at an appropriate DOE and M&O management level to effect the YMP change.

3.5 GENERAL TEST PLANNING

The following sections describe the test management structure and processes required to develop a systematic approach for identifying the scenarios and the flows necessary for the planning, conduct, and reporting of the developmental, operational and periodic performance test and evaluation activities. Also addressed are QA controls and integration with existing YMP test elements and personnel. As discussed in Section 3.2, site characterization and performance confirmation test planning and management are subject to their own test plans and organizations.

3.5.1 Organization, Administration, and Reporting Responsibilities

As stated in Section 3.1.2 and referenced above, the M&O will establish a test management organization to ensure that the objectives stated in Section 3.1.1 are met and that all test and evaluation activities described in the MGR T&EP are performed under appropriate QA, management, and technical controls to ensure the validity of the information to adequately support the licensing process and licensed operation.

The M&O test organization shall work with the DOE test organization in order to facilitate coordination, oversight, and monitoring of the test planning activities and functions described in this document. A description of the M&O test organization, leadership, support, and working groups is provided below.

3.5.1.1 Initial Test Planning Implementation

The Verification Selection Scenario and Performance Confirmation Groups are existing test working groups that come under the oversight of the Systems Engineering and Integration (SE&I) Office. A description of these groups, their responsibilities, and their functions is provided below:

- **Verification Scenario Selection Group**–This group is an integrated product development team supported by each major functional area (i.e., Surface Design, Subsurface Design, Quality Assurance, Waste Package Operations, Performance Assessment, Licensing, Environment Safety and Health, Natural Environment, and Systems Engineering). This group developed the MGR T&EP and is responsible for implementing the verification planning and risk management processes.

  Verification confirms the system performance per the requirements. This is an early activity as described in Section 3.5.2.1 and is based on a thorough review of the requirements. Verification planning evaluates the requirements for performance, function, and design, and develops quantitative test criteria, and test and resource requirements.

  The verification scenario selection group will establish a risk team. The risk team is a specialized group that will also be identified to perform risk management and technical performance measurement development/monitoring. Risk team responsibilities are presented in Section 3.4.

- **Performance Confirmation Group**–This is a special test and analysis group charged with a specific set of responsibilities to define and conduct performance confirmation activities for the MGR. The performance confirmation group is also an integrated product team. This test group is currently developing the Performance Confirmation Plan (Section 3.2.2).

  As stated in Section 3.3.2, the performance confirmation and verification selection scenario groups will integrate test planning, where practical, to ensure that the MGR provides performance confirmation data and to maintain efficient use of resources during preclosure test activities.

3.5.1.2 Test Planning, Conduct, and Reporting Implementation

As the MGR progresses from the design into the construction phase, testing and evaluation become more important to the success of the repository. The M&O shall establish a management organization at the operations level to implement the test planning, conduct, analysis, and reporting functions described in Section 3.5.2 and depicted in Figure 3-7. The M&O test organization leadership, support, and working groups are described below.

- **Test Director**–The test director has individual responsibility for the management and operations of the MGR test and evaluation planning activities and program functions as

described in the MGR T&EP. The test director will be a senior manager within the YMP who has a technical background commensurate with the overall MGR Test and Evaluation Program. The test director will report to the Office of the Assistant General Manager.

- **Test Working Groups**–The test working groups' leaders and membership will be appointed by the test director to perform the detailed test planning, test conduct, risk management, test documentation, and anomaly resolution. Test working groups will be formed to support developmental, operational and periodic performance test and evaluation activities. The initial test planning groups for performance confirmation and verification scenario selection activities will be maintained as working groups within this test organization.

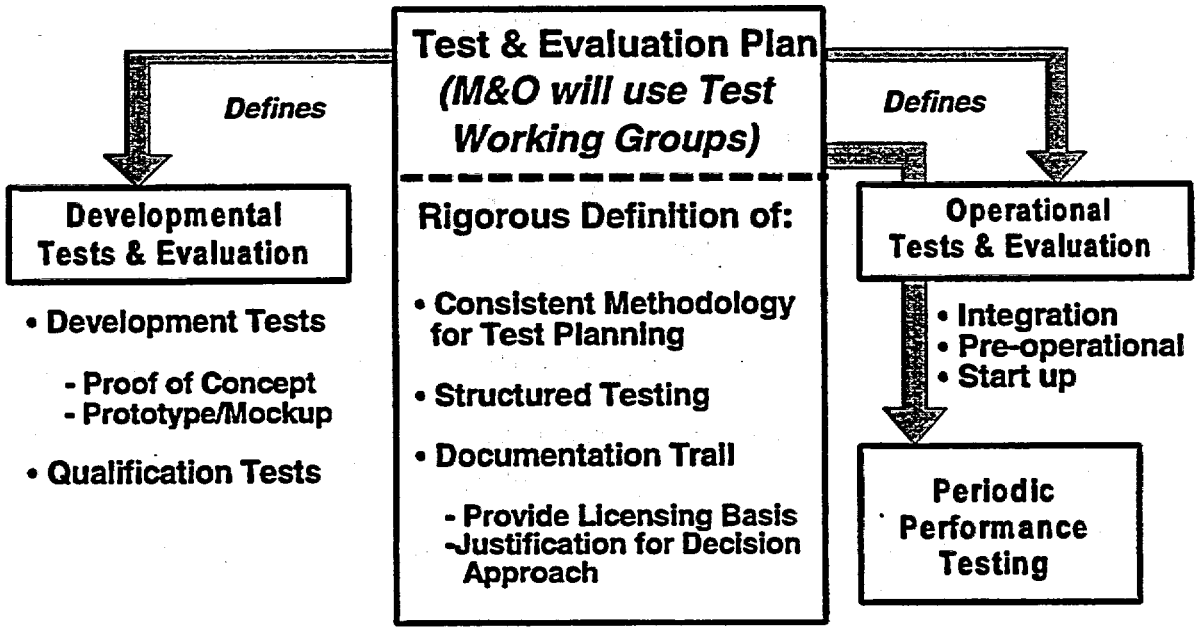

Figure 3-7. How the M&O Test Organization will use the T&EP

- **Test Conductor**–The test conductor, appointed by the test director, will chair the test working groups and will have responsibility for all test activities for the test scenario under consideration.

- **Quality Assurance**–The test working groups will be supported by a QA representative to ensure that *Q-List* (YMP 1997) items are tested according to the approved test plans (as specified in Section 3.5.2).

- **Environment, Health and Safety**–The test working groups will be supported by an Environment, Health and Safety representative to ensure that tests are sufficiently protective and compliant with environment, health and safety controls.

- **Test Support Group**–A test support group shall be formed and will be responsible for the integration of MGR test activities and shall provide planing support to the test organizations and working groups described above. The test support group will be chaired by the test director. This group will be staffed by senior managers from each of the operations and will also include three at-large members for Regulatory, Natural Environment Program, and Environment Health and Safety.

  The test support group shall meet quarterly, during the early stages of the MGR development, to support the initial planning activities and the identification of the verification scenarios. During the construction and operational phases, this group will meet as needed to review test schedules, plans, results, and anomaly resolutions.

3.5.2 Test Planning, Conduct, Analysis and Reporting

The first step in test planning is selecting the scenarios to be tested. Figure 3-8 outlines this process which is described in Section 3.5.2.1. Subsequent diagrams and supporting section numbers are summarized below:

- Figure 3-9 depicts verification of requirements by test as described in Section 3.5.2.2.

- Figure 3-10 identifies the activities necessary to perform test planning analysis, test conduct, test reporting and retesting, if required. This flow is described in Section 3.5.2.3.

- Figure 3-11 is the process followed for reviewing and evaluating anomaly reports and is described in Section 3.5.2.4.

- Figure 3-12 depicts verification of requirements by analysis as described in Section 3.5.2.5.

- Figure 3-13 depicts the Proof of Concept Testing Process which is described in Section 3.5.2.2.1.

- Figure 3-14 depicts the MGR T&EP Test Areas as described in Section 3.6.

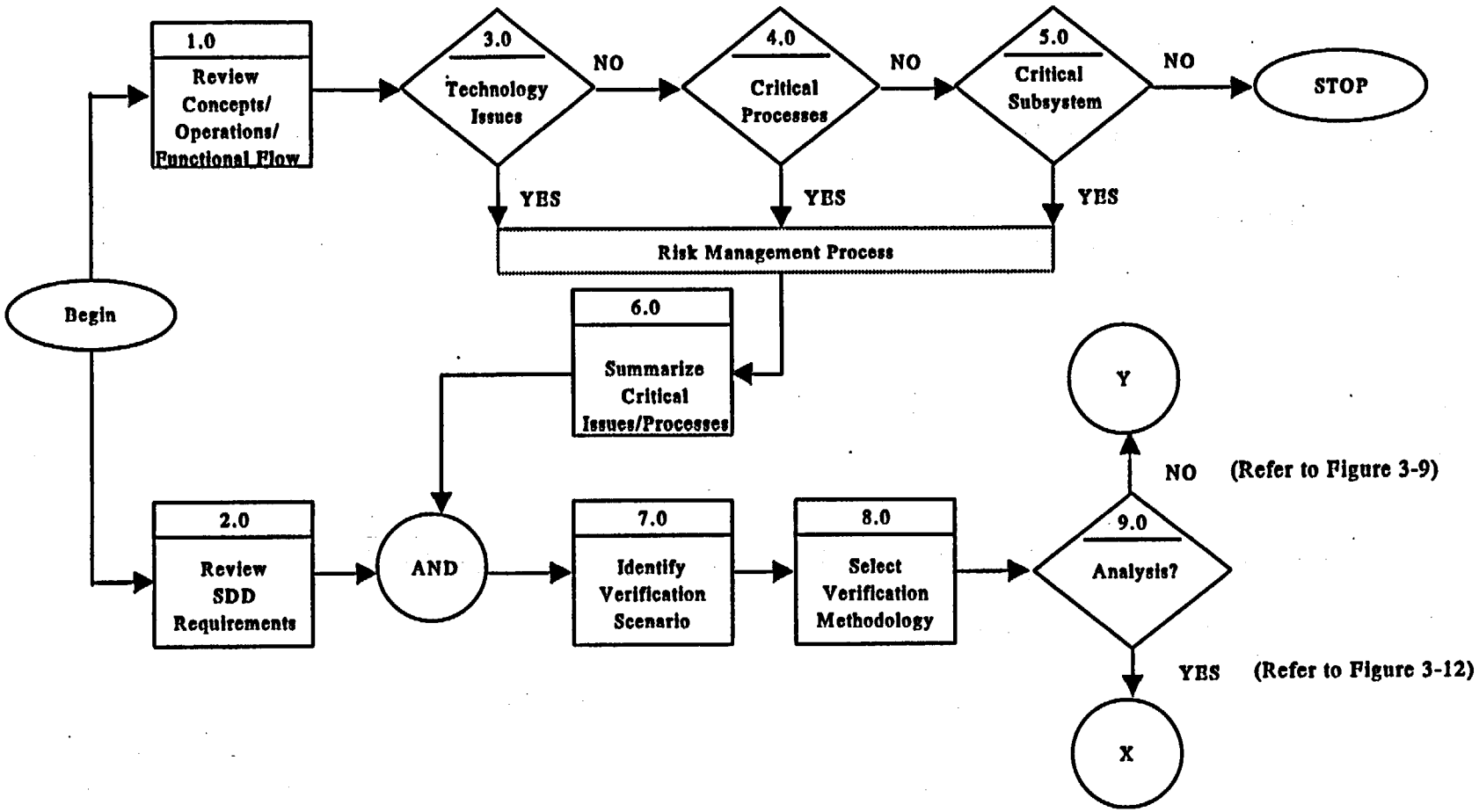

Figure 3-8. Verification Scenario Selection Process

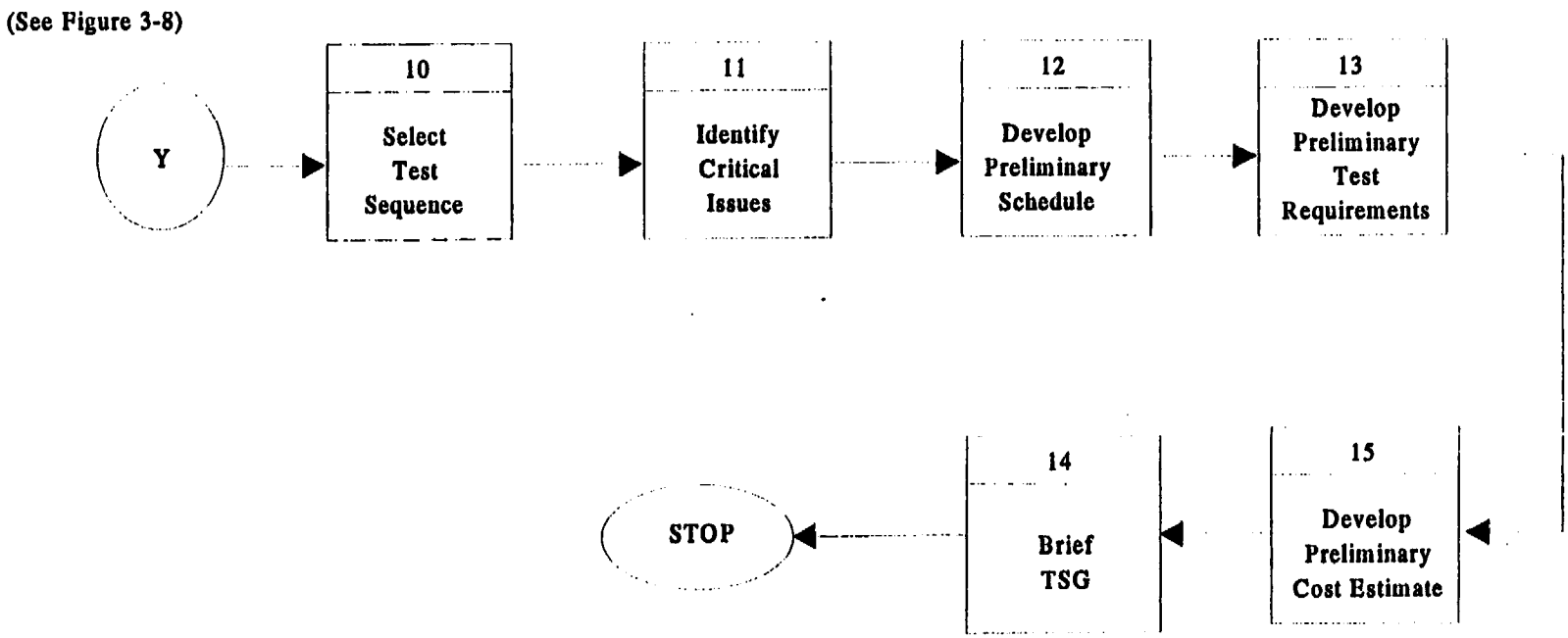

Figure 3-9. Verification by Test or Demonstration (Extension of Figure 3-8)

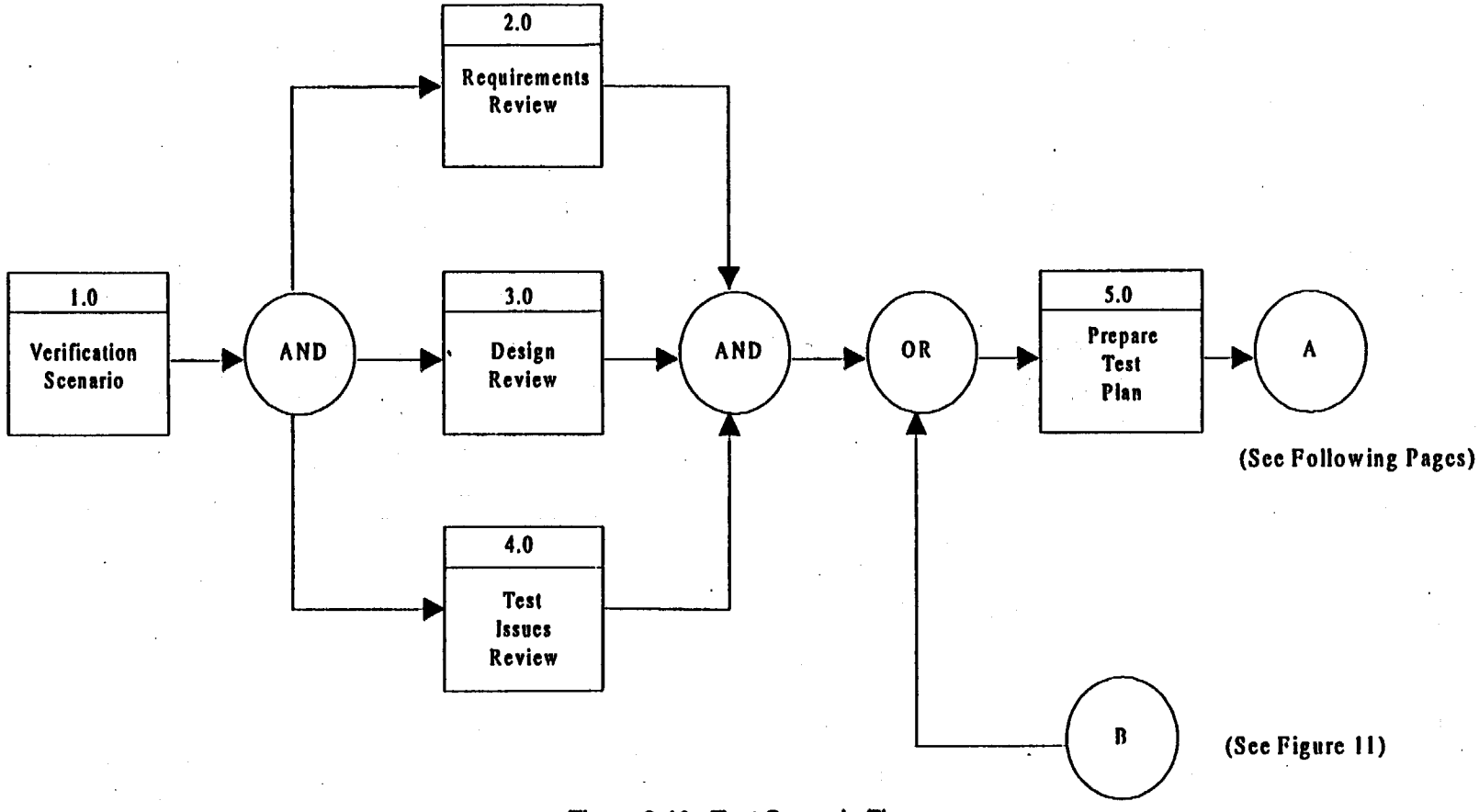

Figure 3-10. Test Scenario Flow

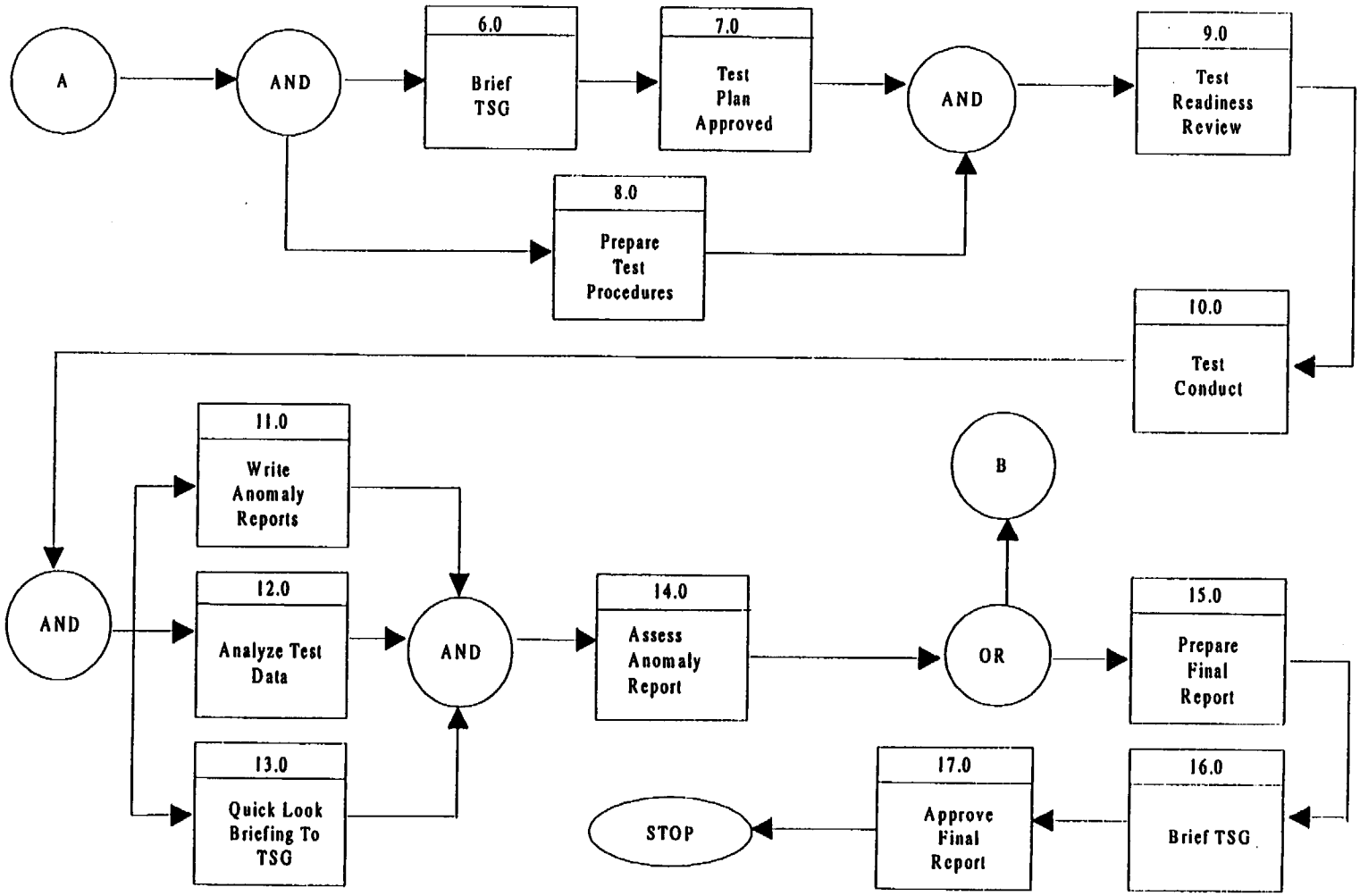

Figure 3-10. Test Scenario Flow (Continued)

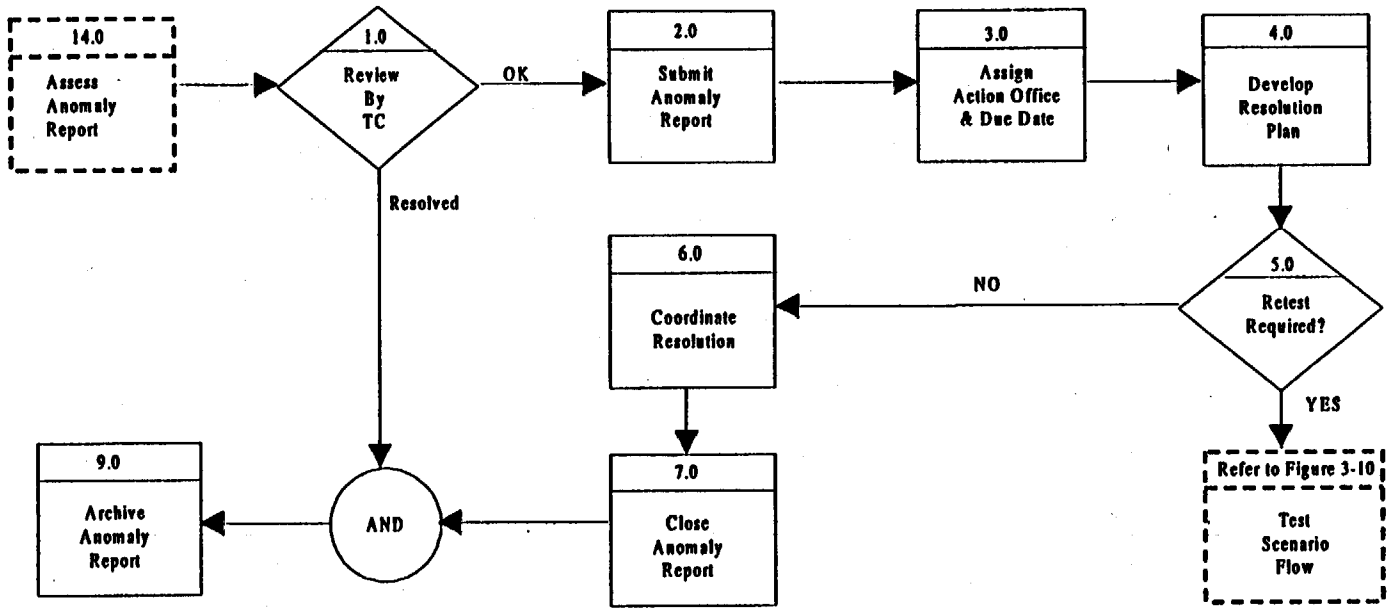

Figure 3-11. Anomaly Report Flow

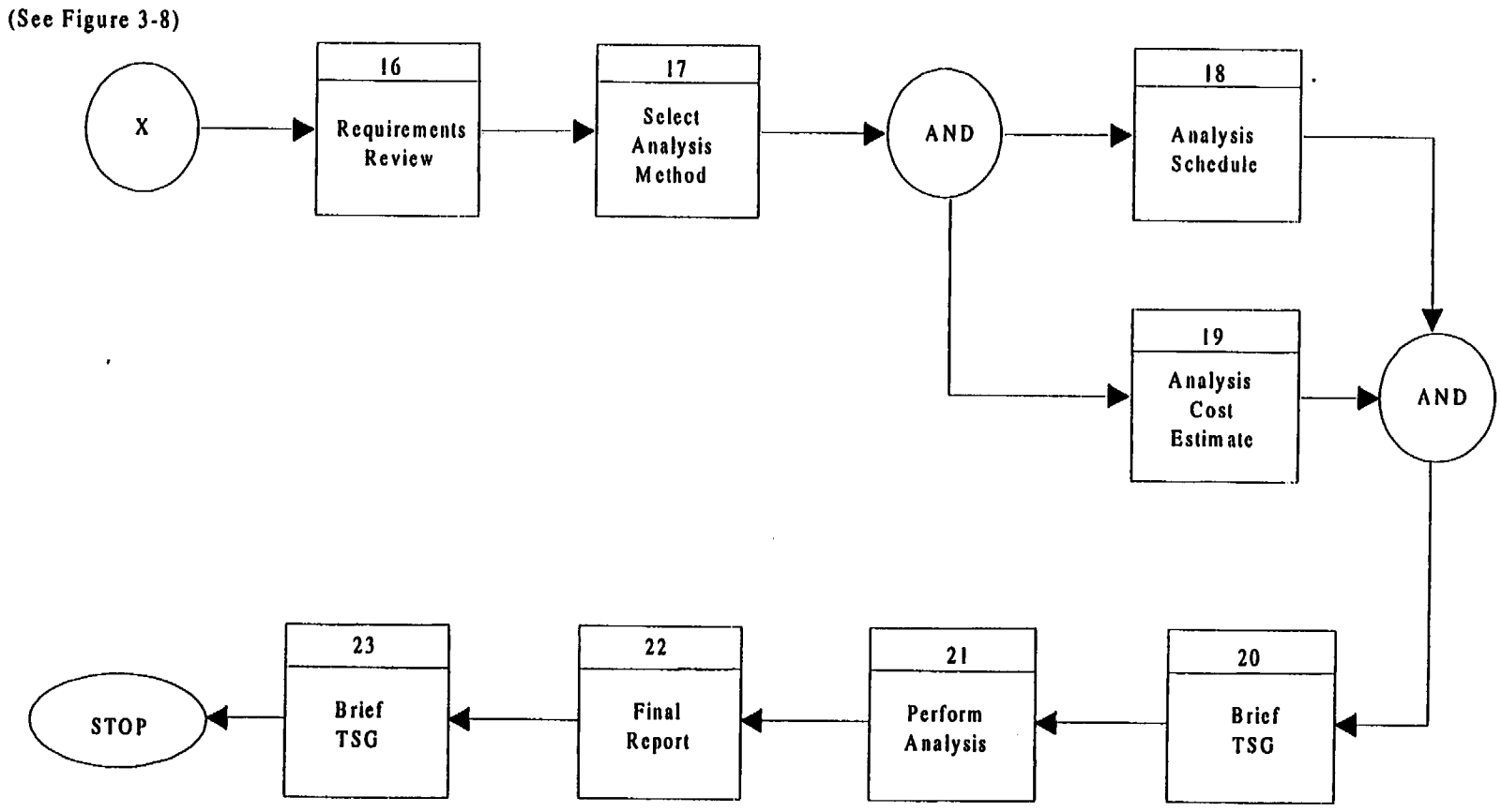

Figure 3-12. Verification By Analysis Flow (Extension of Figure 3-8)

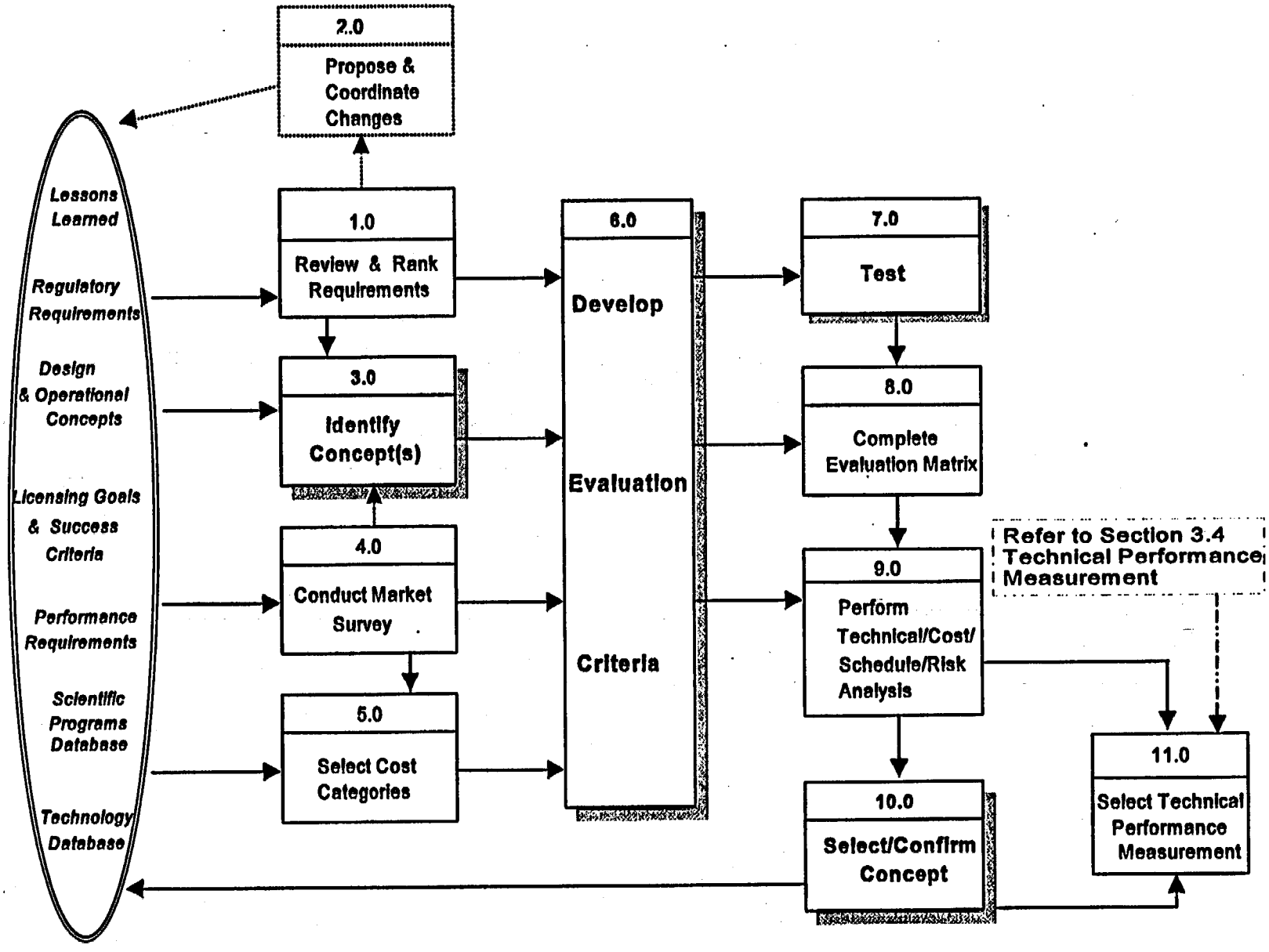

Figure 3-13. Proof of Concept Design Process

MGR T&EP TEST AREAS

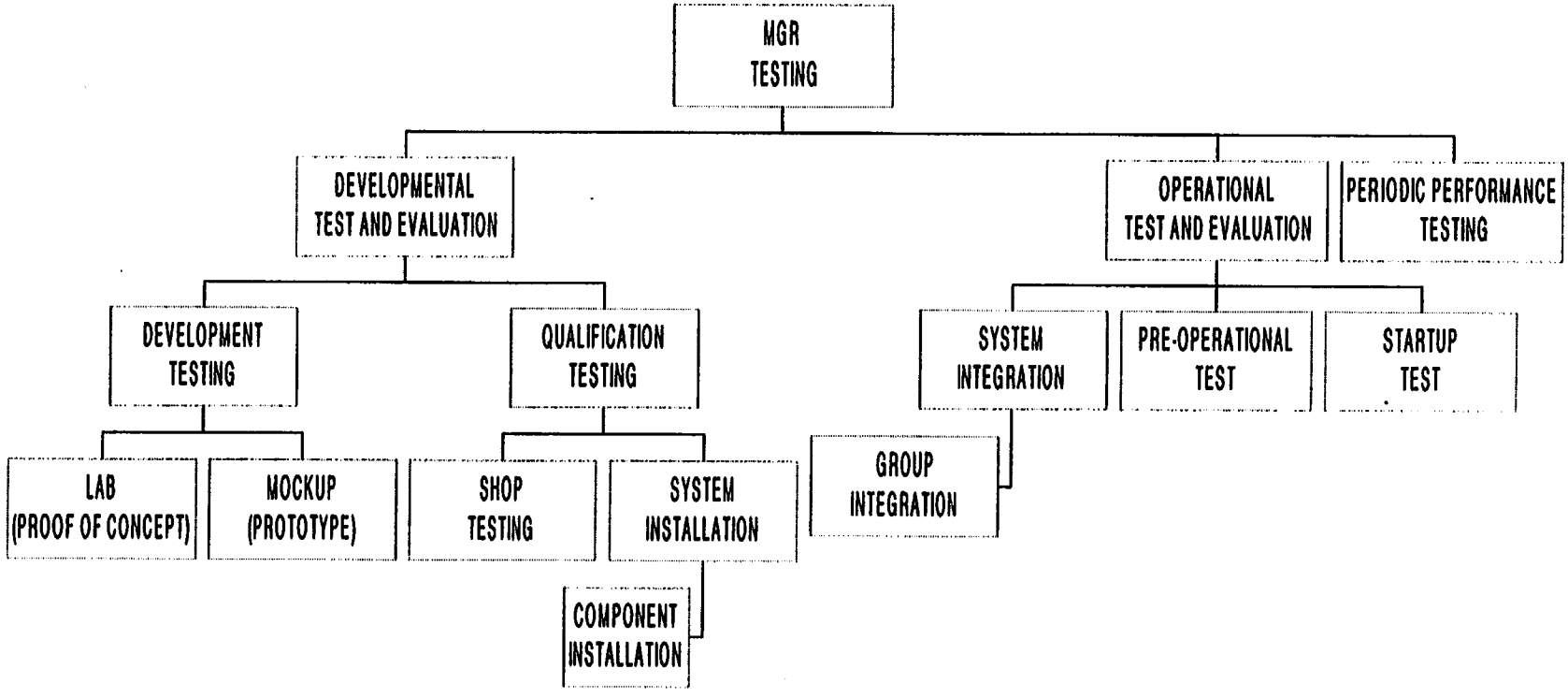

Figure 3-14. Monitored Geologic Repository T&EP Test Areas

3.5.2.1 Verification Scenario Selection Process

Figure 3-8 and the following sections describe the verification scenario selection process to be followed for selecting potential verification scenarios that are subjected to the test planning analysis process. A verification scenario may take the form of, for example, transporting a waste package from the surface, down the ramp, into its emplacement drift, and onto its pedestal support within a prescribed amount of time. In this example, the scenario is defined as the transportation of the waste package from the surface to its pedestal support within an emplacement drift. The amount of time for transportation of the waste package from the surface to its final resting place may have been imposed to ensure that no bottlenecks in the disposal container holding area or transporter loading area are present. This could be considered a critical interface because the failure to achieve such an emplacement rate could have implications on the size of the lag storage area. Another example of a verification scenario would be to measure pressure differentials at different zones of the waste handling building during a given handling operation. This would ensure the ability of the ventilation system to maintain negative pressure during a specified handling operation.

Review Concepts/Operations–This review applies to the documents listed below:

- *Mined Geologic Disposal Systems Concept of Operations* (CRWMS M&O 1997a)
- *Civilian Radioactive Waste Management System Requirements Document* (DOE 1996)
- *Mined Geologic Disposal System Requirements Document* (YMP 1998)
- *Controlled Design Assumptions Document* (CRWMS M&O 1998)
- *Mined Geologic Disposal System Functional Analysis Document* (CRWMS M&O 1996a)
- *Performance Confirmation Concept Study Report* (CRWMS M&O 1996b)

SDDs and combinations of SDDs that embrace new technology or applications of existing technology to new environments, either contained within or dependent on critical process flows or designated as a critical subsystem or interface, should be identified as potential sources for developing verification scenarios.

Review SDD Requirements–Along with the SDD concepts review, the verification scenario selection group should review the requirements and constraints to determine how they should be verified, when the verification should be complete, what organization is responsible for the verification, and that the requirements and constraints, if any, have been verified and require no further analysis. This review should select and/or confirm the verification strategy required for each requirement and constraint. Review of all applicable laws, codes, and regulations shall also be performed and the appropriate verification strategy selected and included in the follow-on test activities.

These reviews shall include an in-depth analysis of the MGR licensing requirements in 10 CFR 20 and 10 CFR 60 as well as the regulatory compliance requirements and the data acquisition needs to support the development of the environmental impact statement.

Technology Issues–MGR subsystems, components, elements, and sub-elements that consist substantially of new technology fall into this category. New technology refers to technological solutions that have little or no data from existing operating systems, a like environment, and/or have not been subjected to a structured test program from which data were collected and analyzed. When new technology is injected into the MGR environment, a potential verification scenario is developed that will describe and measure the response to the environment. The data will be analyzed and a recommendation will be developed based on how the technology will respond throughout the life cycle. This also includes the operation of known technologies, design concepts, and system processes in unprecedented environments (i.e., operations that have no regulatory precedent).

Critical Processes–The verification scenario selection group shall examine and analyze the SDDs and combinations of SDDs, along with the process flow, and identify those processes that are critical to the MGR mission. The term "critical" is defined as important to radiological safety, waste isolation, and/or consisting of complex systems or processes. Key elements in this analysis are the associated architectural elements that influence the process as well as the regulatory constraints that may impede the flow structure.

Critical Subsystems and Interfaces–Critical subsystems and interfaces are lower level components of the MGR that do not exhibit a characteristic described in one of the two categories listed above, yet represent a critical component in the mission success of the MGR. These interfaces are usually external (e.g., a component of the MGR must interact with an existing environment or an environment that will be provided by a source not associated with the MGR). If the MGR mission success is dependent on the continued and accurate operations across the interface boundary, then the interface becomes a potential verification scenario.

Summarize Critical Issues/Processes–A summarization and consolidation of the identified critical issues and processes is appropriate at this time since it will facilitate the identification of verification scenarios as well as lend itself to easy association of critical issues/processes with verification scenarios.

Identify Verification Scenarios–A set of potential verification scenarios shall be developed with the intent that conducting the scenarios will provide the means of verifying that the design meets its requirements. The risk team shall examine the verification scenarios to determine whether there are any risks associated with verification of the requirements. Performance and radiological safety risks may be identified while addressing the question of whether there are technology issues, critical processes, and/or critical subsystems and interfaces. A verification scenario may be conducted either by way of a demonstration, test, or analysis. This is further discussed in the next section.

Select Verification Methodology–Upon completing the review of the appropriate concepts and requirements, a set of potential verification scenarios shall be developed. Personnel and equipment safety and security are among the key factors in evaluating and selecting a process as a potential verification scenario. The verification scenario selection group shall combine those scenarios that have a common thread and then select the verification method for each scenario. Verification shall focus primarily on analyses and tests. A discussion of the specific steps required to verify by either analysis or test/demonstration are discussed in subsequent sections.

The analysis function is the primary verification process of the MGR performance confirmation function. Performance confirmation activities are developing mathematical models and simulations that should be used to verify the long-term repository performance requirements for the MGR. Model and simulation verification data gathering is currently on-going and should continue throughout the preclosure period. Analysis will also be employed by periodic performance testing. Based on data collected from operational SSCs and predetermined periodic investigations, the appropriate test working group will perform modeling, and analysis to support the verification of preclosure regulatory requirements.

As depicted in the final decision gate of Figure 3-8, if analysis is selected as the verification methodology, then the steps depicted in Figure 3-12 are applicable. On the other hand, if either test or demonstration is selected as the verification methodology, then the steps indicated in Figure 3-9 are appropriate and are described below.

Identify Critical Issues–The risk team shall identify critical test issues for each scenario selected for verification that should be addressed by the test planning process. These issues may include requirements that should be highlighted, particular design solutions that may represent risk to achieving NRC regulations and licensing requirements, complicated processes that may require special attention by the test planners, test boundary conditions that could help define the total system capability, stress conditions that need to be addressed, or combinations of these activities to which the test planners should pay careful attention.

Develop Preliminary Schedule–The verification scenario selection group shall develop a preliminary test schedule for each potential verification scenario with time lines for the review and approval process by the test support group, the selection of the test team, the test planning analysis process, test conduct, test reporting, and contingency time for anomaly resolution. These schedules should be integrated with M&O long range planning to develop the critical path.

Develop Preliminary Test Requirements–Identification of the test objectives, special test equipment requirements, test support equipment requirements, instrumentation requirements, test facility requirements, and success criteria must be conducted. This identification should be conducted at the level necessary to support the preliminary cost estimate. Greater fidelity of the test requirements should be accomplished during the detailed test planning.

Develop Preliminary Cost Estimate–Preliminary cost estimates for each of the potential verification scenarios should be developed and submitted to the test support group. The cost estimates should be kept separate from each other to provide the test support group with all relevant data for each potential verification scenario. They should include costs associated with special test equipment, test support equipment, instrumentation, test facilities, resources, and any other acquisition required to support the test.

Brief Test Support Group–Finally, the verification scenario selection group briefs the test support group, relaying the results of the selection verification scenarios. The briefing should include the methodology and approach used by the subgroup to gather and analyze the pertinent data and the resulting conclusions and recommendations for each potential verification scenario.

3.5.2.2 Verification By Test or Demonstration

Testing and demonstrations are two of the methodologies that may be employed to verify compliance with requirements (Figure 3-9). What differentiates a test from a demonstration is in the use of test equipment. A demonstration makes no use of test equipment, but is verifiable, through observation, that the system functions as intended. For example, the verification scenario example presented above where the waste package is transported from the surface to its pedestal support within an emplacement drift would most likely be a demonstration in that there would be no test equipment required to confirm that the waste package had successfully been transported from the surface to the emplacement drift. Rather, test personnel would be able to act as observers in verifying the successful transport of the waste package from the surface to an emplacement drift.

Given that the methodology selected to verify that a scenario is a test, the next step is to determine what type of test should be used to verify the scenario. The following sections define the choices.

3.5.2.2.1 Development Testing

Development testing is used to support design activities by confirming design concepts, evaluating alternative design concepts, and showing the availability of needed technology. Development testing may involve prototype building and mockup support. A prototype is a scaled engineering model built to investigate and test evaluate specific design concepts. Mockups are similar in form, fit and function to an operational model and are used to test design prior to production. These tests shall be planned and conducted by the design organization as part of the proof of concept design process described below.

Although development tests are not used to verify requirements and are not usually subjected to the rigorous qualification and system testing discussed in the following sections, they are essential in reducing development risks and in supporting detailed design. Therefore, the verification scenario selection group and risk team shall provide support to the design organization by assisting in the development of test plans, documentation and coordination of results, the scheduling of YMP test assessments, and the development and tracking of technical performance measurements. Figure 3-13

depicts the proof of concept design process which is discussed in detail in the following sections. This figure shows the relationships between the steps involved in identifying, evaluating, and selecting/confirming a design concept. This relationship is not presented as a formal flow, since the number of steps performed and sequence of performing the steps may vary according to the concept(s) that are being investigated.

Proof of Concept Design Process–As part of the verification scenario selection process, new technologies are flagged prior to identifying the verification scenario (Section 3.5.2.1). A new technology is defined as a technological solution that has little or no data from existing operating systems, a like environment, and/or has not been subjected to a structured test program from which data was collected and analyzed. Introducing new or unproven technologies into the detailed design process presents risks to developing SSCs that meet specifications; meeting licensing, cost and schedule constraints during construction, training and operational test and evaluation; and maintaining system integrity by ensuring that regulatory requirements are realized and maintained. In order to support the design process and reduce risk, testing shall be implemented early in the development phase. Proof of concept design process as depicted in Figure 3-13 can be used to test and evaluate alternative design concepts or confirm a specific design concept. The data collected from this activity should support the detailed design effort and will also be fed into the verification scenario selection process to help identify verification scenarios and select verification methodologies (Section 3.5.2.1).

Review and Rank Requirements–MGR requirements, to the extent developed, need to be collated and ranked according to their importance in meeting licencing goals and success criteria. This will provide for less subjectivity in evaluating concepts according to a design/licensing basis, performing risk analysis, and selecting or confirming a concept. As the requirements flowdown matures, this ranking effort should be updated and reassessed.

Propose and Coordinate Changes–Proof of concept design process should be conducted early in the development phase at the same time the SDDs and SSCs requirements are being developed. It is imperative that design engineering, with the support of a verification scenario selection group, provide feedback to the SDDs and SSCs requirements flowdown process. This support will help minimize design risk by facilitating realistic specifications and testable designs.

Identify Concepts–Design/technology concepts and processes are proposed based on a review of design and operational concepts and functional flows; lessons learned from similar projects/environments; and site characterization studies, evaluations, and results. Ceramic waste package material and oxygen-free welding are examples of concepts and processes, respectively, that could be proposed during this step.

Conduct a Market Survey–A market survey is usually conducted while identifying concepts. This will provide information concerning the most current technology and trends to support the identification process.

Select Cost Categories–In order to support the trade and risk analysis, cost categories, and cost data are compiled. Market surveys are usually the best source for cost information. Technology databases may help identify cost categories, but these databases are generally out of touch with evolving technologies.

Develop Evaluation Criteria–Based on the inputs from the previous steps, a set of criteria is developed to evaluate the concept or concepts identified.

If the intent is to select a design/technology from among several alternatives, then these criteria may be key technical parameters (derived from Step 1, Figure 3-13) along with production and installation costs (Step 2, Figure 3-13). In performing the trade analysis, criteria should be selected that will reveal the difference between concepts, as opposed to confirming performance and applicability to the system. Once the concept has been selected, additional testing should be performed to solidify performance and to prove the concept as a viable candidate for detailed design.

If the intent is to investigate a specific concept's applicability to an MGR need or requirement, evaluation criteria should focus on the concept's capability to meet the need or requirement.

Test–Adequate testing and analysis is planned, conducted, analyzed and documented by the design group investigating the concept/concepts. The verification scenario selection group shall support this effort to ensure accuracy of testing and proper documentation.

Complete Evaluation Matrix–Tests are performed and re-performed until sufficient and reliable data can be compiled to complete the evaluation matrix. After the matrix is complete, it is signed by the leaders of the design group and supporting test working group.

Perform Risk Analysis–Risk analysis is performed to evaluate factors such a reliability, availability, maintainability, safety, and other aspects that may not be easily tested in a laboratory environment or quantified on an evaluation matrix. For example, a low cost technology that meets all requirements may have an availability issue that would put the construction schedule at risk.

Select/Confirm Concept–Based on the data summarized on the matrix and the risk analysis performed (Steps 9 and 10, Figure 3-13), a concept is selected or confirmed; retesting and/or additional research may also be recommended. Conclusions, matrices, and risk analyses are compiled and entered into a database to support the detailed design process and future test planning analysis. This database is developed and maintained by the design group conducting the test.

Select Technical Performance Measurements–Once a concept is confirmed, a key technical parameter may be selected as a technical performance measurement (Section 3.4) to be evaluated during the detailed design phase. The technical performance parameter could be one of the evaluation criteria derived from a highly ranked requirement during Steps 1 and 6, Figure 3-13. Technical performance measurements are recommended due to the importance of design, licensing, and system performance requirements. Although a concept has been confirmed, additional design development may be needed by the vendor to achieve desired specifications. The risk team shall be responsible for the coordination and implementation of technical performance measurements into the MGR Test and Evaluation Program functions (Section 3.4).

3.5.2.2.2 Qualification Testing

Qualification testing is used to verify that the design satisfies the requirements and that the design is adequate for performing within MGR specifications. The tests are normally planned and conducted by the vendor with the concurrence of the QA organization. *Design Verification* (QAP-3-2), Section 5.6 establishes the requirements for conducting, and coordinating design verification qualification testing. The verification scenario selection group will ensure that test requirements are identified and integrated into the SDDs. Qualification test results shall be reviewed by the test director in order to ensure that a conformance verification matrix is properly annotated. This matrix shall document the qualification test results, test requirements and design requirements as specified in the SDD.

3.5.2.2.3 System Testing

System testing verifies that the constructed MGR meets the requirements and demonstrates the capability of the MGR when it functions in the operational environment. Input stimuli are developed to subject the unit under test to stress conditions that would not normally occur during the operational phase but are within the operational design limits. These stressing conditions may be developed to determine the true capability of the system and assess how well the system meets the specifications necessary to validate the design/licensing/safety basis.

There are three distinct types of system level testing activities that will be used to verify the MGR:

- **Operational Testing,** where the production components of the MGR are tested and evaluated in an operational environment to determine operational suitability, system effectiveness, and verification of regulatory requirements. Operational testing includes integration, pre-operational testing, and startup testing. Integration testing occurs when only a portion of the MGR is tested in the operational environment. The pre-operational test is the last integrated system testing activity performed by test personnel prior to turnover to operations personnel for startup testing. The startup test is where all the production parts of the MGR are combined in an operational environment and tested as a single entity. Mockups, test facilities, "dummy" waste packages are utilized to test off normal condition and simulate operational environments (when some portion of the MGR may not be ready or available).

- **Periodic Performance Testing,** where the operational MGR is tested for verifying preclosure requirements.

- **Performance Confirmation Testing,** to support the verification of postclosure requirements. Performance confirmation is discussed in Section 3.2.2.

3.5.2.2.4 Test Planning and Conduct Responsibility

Development and qualification testing will be planned and conducted respectively by the design organizations and vendors with test support group oversight. System testing will be the primary focus of the M&O test organization and its related subgroups.

3.5.2.3 Detailed Test/Demonstration Planning

Test planning analysis is the systematic approach for performing a detailed review of requirements and designs to identify test requirements and procedures; developing detailed test plans with the appropriate approvals; preparing detailed test procedures to be used during test conduct; and scheduling, preparing, and conducting a test readiness review to assure that all resources and documentation are in place.

Included as part of the test plan is a detailed test schedule that should be integrated with M&O long range planning and consistent with MGR cost estimates. Figure 3-8 identifies the activities necessary to perform test planning analyses, conduct tests, report test findings, and retest if required. These activities are described below.

Verification Scenario–This information is derived by the verification scenario selection group and used to define the scope of the test working group. (Section 3.5.2.1)

Requirements Review–The test working group will conduct a requirements review to determine any special test procedures, resources, support equipment, and/or facilities that are required to verify a requirement or a group of requirements. This review will be conducted parallel to the test planning activities of design review and parallel to review test issues.

Design Review–The elements to be tested and/or operated as part of the test procedures should be reviewed for unique characteristics, safety, security, and special operating procedures, if any are required. The test working group should be cognizant of any special training a that is required for the test operators as well as unique safety and/or security requirements that need to be recognized.

Review Test Issues–The verification scenario selection group and the test support group may identify test issues that the test working group will address during the planning process. As the issues are reviewed, special and/or unique procedures, resources, support equipment, and facilities are identified so that test scheduling, cost estimating, procedure preparation, and data collection and recording can accommodate these requirements.

Prepare Test Plan–Among other things, the test plan will include the following: test description; test objectives; rationale; constraints; success criteria; resource requirements; facilities; test support equipment; special test equipment; training requirements; environment, health and safety controls; data acquisition; data analysis methods; detailed test schedule; and detailed cost estimate.

The test schedule that will build on the preliminary test schedule already developed includes the planning activities and a contingency time line for any retest that may be required to confirm resolutions to critical anomalies encountered during the test conduct. As the planning activities mature, schedule updates will be required to reflect the current information, which leads to the final test schedule that will be delivered to the test support group as part of a briefing given by the test conductor.

Brief Test Support Group–When the test plan has been completed, the test conductor will brief the test support group on the proposed activities. The detailed test schedule and final cost estimate for

the test scenario are important aspects of the test scenario that require the attention of the test support group.

Test Plan Approval–The test support group must approve the test plan in order for the test working groups to proceed with the remaining test activities. When the plan is approved it will become a controlled document, which can only be changed by following a formal change process.

Prepare Test Procedures Review–The preparation of detailed test procedures governing test conduct, data collection and recording, test operations, and all the relevant safety and security measures run parallel to test support group briefing and test plan approval activities. The test procedures will be developed and conducted under the QA program. Each procedure action requires the initials of the test operator assigned to the test working group. Testing shall make use of industry standard requirement, code, or similar document, or in accordance with the manufacturer's test requirements or procedures revised to meet project requirements, and approved by the test support group. Standard testing requirements shall be identified, incorporated, and referenced.

The test procedures will contain objectives, test configuration and set-up instructions, evaluation criteria, test instructions and expected results, and data management. Test procedures will also contain prerequisite fabrication checks or operations to ensure that tests are sufficiently compliant with applicable environment, health and safety controls.

The test instructions establish the detailed procedures for administration, control, and test performance, and these instructions are documented in the detailed test plans. Test performance shall follow approved procedures. Deviation from procedures will require approval from the test director and shall not compromise applicable environment, health and safety controls.

Test conditions and resources (test environment, facilities, test and support equipment, spare parts, test personnel, software, and procedures) must be identified.

Test facilities, test chambers, test equipment, instrumentation, and support services (utilities, transportation, etc.) must be identified and scheduled for each test. A detailed description of the test facility and layout shall be included in test documentation.

Test Readiness Review–This final pre-test activity is conducted to ensure that the procedures and resources are in place to support the test. These reviews will be conducted prior to the commencement of each major system and subsystem tests, and will ensure that:

- Test procedures comply with the test plans and descriptions, respond to test requirements, and satisfy specification qualification requirements
- Test support equipment, facilities, personnel, and other infrastructure are in place to support testing
- Test procedures are compliant with applicable environment, health and safety controls
- Required test documentation is complete.

The test readiness review will be hosted by the test conductor for the test support group, as well as for other management and technical offices. For Q-list or other items and components, test readiness review may be conducted according to the *Readiness Review* (QAP-2-6). Determination will be made on a case by case basis.

Conduct Test–Test conduct may be performed in two parts: a dry run and a run-for-record. During the dry run, the test procedures are checked for proper sequencing, test operators become familiar with the equipment and procedures, the test equipment is checked for proper operation, and the safety and security measures are evaluated. Redlines to the test procedures can result from the dry run, in which case the procedures may have to be rewritten. For Q-list items, redlines need to be incorporated into test procedures prior to the run-for-record. However, for items determined to be non-Q, it is permissible to proceed with the run-for-record using redlined procedures, provided that the redlines are clear (i.e., no ambiguity exists) and comply with applicable environment, health and safety controls. Dry run testing should be clearly defined on the detailed test schedule.

Run-for-record testing is the formal test conduct requiring the participation of the test operator to initial each procedure step. Data collected during this activity will be the basis for the conclusions and recommendations for the final report. Documented anomalies will require a formal resolution process.

It is the responsibility of the test working group to ensure that the test of Q-list items is performed according to final test procedures and all anomalies are properly documented and submitted for resolution. For Q-list items, a QA representative will also participate, along with members of the test working group, in the development and of the final report and anomaly resolution process.

Write Anomaly Reports–Reports on observed anomalies must be written during the run-for-record portion of the test and submitted into a formal resolution process. For Q-list SSCs that fail acceptance criteria, the anomaly report will take the form of a Non-Conformance Report.

Problems may be related to the implementation of specifications, procedures, personnel errors, equipment failures, etc. Resolution of the problems may include an integrated review of the circumstances surrounding the problem, personnel training, equipment repair, changes to the test requirements, or changes to the test procedure. The test procedures, which will be developed and conducted for Q-List SSCs, will also have to be modified, if necessary, in accordance with appropriate QA controls (see Section 3.5.4).

Analyze Test Data–Members of a test working group will analyze the test data to ensure that the expected results did occur. This activity will also provide for appropriately annotating the Conformance Verification Matrix for all the requirements that were verified during the test.

Quick-Look Briefing to Test Support Group–The test conductor will provide a quick look briefing to the test support group within three working days of completing the test. This briefing should review the test operations, the data collected, all the anomalies submitted, and provide an overall assessment of the test conduct phase.

Assess Anomaly Report–The anomaly reports shall be evaluated to determine whether a retest is required or if another means can be pursued to resolve the anomaly. This is discussed in more detail in Section 3.5.2.4.

Preparing the final report, briefing the test support group, and approval of the final report (Steps 15 through 17) are conducted once the anomaly reports, if any, have been reviewed and acted upon (Figure 3-10).

Prepare Final Test Report–The final test report, prepared by a test working group, shall identify the test purpose, objectives, results, and any and all required retesting. The annotated test procedures used for the run-for-record will be an appendix to the report as will the approved test plan, a copy of all the data collected, and a copy of all the anomaly reports (including all resolutions that have been completed prior to completing the final report). A detailed explanation of all open anomaly reports will also be required along with the conclusions that developed from the test and the resulting data analysis. Test reports for items on the Q-list will be written in accordance with Section 11 of the QARD and submitted as items of record in accordance with Section 17 of the QARD.

Brief Test Support Group–This is the final briefing by the test conductor to the test support group. The briefing will include the results of the test, the data analysis, all requirements and/or processes verified along with a schedule analysis.

Approve Final Report–Upon approval of the final test report by the test support group, it will become part of the historical record demonstrating the capabilities of the MGR.

Daily Log–A daily log of all onsite activities beginning with the integration of test facilities in preparation for the test will be maintained by the test conductor. This log book shall record the personnel on site, the activities that take place while the site is occupied, all anomalous conditions and references to anomaly reports, test start and stop times, and any unusual or out-of-the-ordinary conditions that arise. The log book shall be hard bound with numbered pages; all entries shall be made in ink with the date and time recorded. A Daily Log will be developed and maintained according to *Record Source Responsibilities for Inclusionary Records* (AP-17.1Q).

3.5.2.4 Anomaly Report Flow

Anomaly report assessment is one of the possibilities that results from detailed test planning, as depicted in Steps 11 and 14 of Figure 3-10. Anomalies encountered during the test phase should be described in detail and submitted for resolution. The Anomaly Report flow (Figure 3-11) is the process used for reviewing and evaluating the reports, and determining the appropriate course of action given the anomalies.

Write Anomaly Report–All members of the test organization are responsible for the safe and efficient conduct of the test, therefore, any test organization member can write an Anomaly Report and submit it for review.

Review by Test Conductor–The test conductor has the responsibility to review all Anomaly Reports prior to submitting them to the test working group. This review should determine the

accuracy, clarity, and detail of the anomalous condition as to preclude any ambiguous statements. It should accurately reflect the conditions that existed at the time the anomaly was observed and any and all supporting data should be referenced. When the test conductor is satisfied the report reflects these conditions, the Anomaly Report should be submitted for resolution.

If the test conductor can resolve the anomalous condition (i.e., the anomaly no longer exists), additional review and action may not be required. In these situations the test conductor and the report writer should agree that additional action is not required, document the reason for no action, and include documentation in the Final Test Report. In this situation an Anomaly Report is not required.

Submit Anomaly Report–The report is submitted to the test working group where it is assigned to an action office and becomes a controlled document subject to a formal tracking and revision process. All Anomaly Reports will be independently tracked and become part of the permanent record of the test. An updated list of all anomalies and their status will be sent to each member of the test support group on a weekly basis.

Assign Action Office and Due Date–This step is performed by the test conductor and the test working group. When the action office (which could be a test working group) has been established, the resolution process begins. The date the resolution action should be completed, exclusive of retest requirements, if any, should also be established with the coordination of the action office, the test conductor, and the test working group. Once the due date is established, the report becomes an M&O controlled document and will be maintained according to *Distribution, Maintenance, and Use of Controlled and Managed Documents* (AP-6.1Q). Any changes require the coordination of the Document Control Center, the test conductor, the test working group, and the approval of the test director. The change rationale shall become part of the Anomaly Report's permanent record.

Develop Resolution Plan–This step in the Anomaly Report process involves making a determination as to the reason for the anomaly and the best course of action to pursue to resolve it. As indicated in Steps 6 and 7 of Figure 3-11, there are several possible paths to pursue. The anomaly may have occurred because either the test was not properly configured, possibly requiring a change in the test plan or procedure, or because test equipment was found to be faulty. On the other hand, the test may have been properly conducted using an appropriate test procedure, and the cause for the anomaly is that the system tested simply does not meet its requirements.

If a retest is required (Step 5), then the test planning shall be modified and approved by the test support group, depending on the reason for the retest. On the other hand, if a change in the design or design requirement is in order, then this information needs to be transmitted to the appropriate engineers responsible for the affected SDD. However, even if a retest is not required the remainder of the process flow activities will be conducted.

Coordinate Resolution–It is the responsibility of the assigned action office to resolve the anomaly and to complete the coordination of the resolution; this includes coordinating with the report writer, the test conductor, and briefing the test working group.

Close Anomaly Report–When the coordination cycle has been completed, including the agreement on the resolution by the report writer, the test conductor, and the test working group, the action office shall close the anomaly. Each action office shall provide a weekly status report of all anomalies assigned, either open or closed, to the test conductor and the members of the test working group.

Archive Anomaly Report–A copy of each anomaly report, including the complete details of the resolution and all supporting data, shall be included in an appendix to the final test report, which is approved by the test director.

3.5.2.5 Verification by Analysis

The verification of requirements by analysis process is depicted in Figure 3-12.

Requirements Review–The test working group will perform a detailed review of the system requirements, design requirements (allocated and derived), the functional flow processes for the scenario, the constraints, and all the applicable codes, laws and regulations. This review will highlight unique characteristics of the scenario that may require development of models as to simulate processes not currently part of the MGR baseline. The test support group will assign a test conductor to ensure that the following steps are performed.

Select Analysis Method–Each set of requirements, constraints, regulations, codes, laws, processes, and/or concepts shall have an associated analysis method that will be used to verify the scenario. These analysis methods may include existing models and simulations, standard practices, and/or new models or simulations requiring development. Data requirements for each analysis method shall be defined along with the activities required to obtain the data (including laboratory and field investigations).

The assumptions, constraints, and limitations of each analysis method shall be identified along with mitigation measures required to limit any adverse conditions that may arise.

Analysis Schedule–The test working group will develop a detailed schedule of all activities required to verify the scenario. When approved by the test support group, the schedule will be integrated with M&O long range planning.

Analysis Cost Estimate–A detailed cost estimate will be developed which will include the costs of data collection and reduction, special equipment, subcontracts, and special facilities that may be required to support the analysis, data collection, or laboratory work. Cost data will be analyzed to ensure consistency with MGR Program cost estimates.

Brief Test Support Group–The test conductor will brief the test support group on the findings and recommendations of the test working group. Special emphasis should be given to all models and simulation recommended, data collection requirements, the type and extent of laboratory work, any subcontracts that may be required, and the procurement of special equipment required to support the analysis data collection. The briefing shall also include details on the schedule and cost estimate.

The test support group will review and approve the analysis approach developed by the test working group.

Perform Analysis–This activity includes the collection and reduction of the data required for any models, simulations, and standard analysis procedures. These analyses will be performed using validated models or simulations. Model verification, if testing is required, will follow the test planning approach described above in Section 3.5.2.3 and will involve appropriate controls established in the QARD for software verification and validation.

Final Report–When the analysis is complete, the test working group will prepare a final report of which will convey all of the activities that led to the verification of the scenario requirements. The report will include complete details of the analyses, the models, the simulation, and the data collection process along with a schedule. Schedule and budget variations will be explained in detail. All laboratory reports, field notes and simulations will be included in an appendix in the final report.

Brief Test Support Group–The test conductor will brief the test support group on the results of the analysis and the requirements that were verified. The test support group will review and approve the final report.

3.5.3 Confirmation Verification Matrix

The test conductor will ensure that a confirmation verification matrix is properly annotated. This matrix will track and document verification performed according to MGR requirements. This matrix will be maintained by the M&O test organization and updated as testing, demonstration or analysis proceeds to verify the MGR requirements.

3.5.4 Quality Assurance Controls

Conduct of Activities (QAP-2-0), provides the methodology for evaluating activities, identifying those subject to QARD requirements, and determining the QA controls to be applied to the conduct of those activities. QAP-2-0 will be used to determine whether implementation of test planning, conduct, analysis, and reporting has a direct impact on design, procurement, fabrication, performance and operation of MGR Q-List items. Table 3-1 lists the criteria for Q-List items as stated in QARD Section 2.2.2 (DOE 1997). The MGR T&EP will adhere to the requirements in Section 11 of the QARD (DOE 1997). Applying these controls will ensure the validity of the information used in the development of the MGR and required to support the licensing process.

Table 3-1. MGR Q-List Items

QAP-2-0 specifies that QA controls be applied to activities subject to QARD classification for MGR Q-List items. QARD Section 2.2.2 (DOE 1997) classifies Q-List (YMP 1997) items as:	
Section	**Q-List Items**
2.2.2	Items important to public radiological safety as described in 10 CFR Parts 60, 71 and 72.
	Items and natural barriers important to waste isolation as described in 10 CFR Part 60.
	Items required for the control and management of site-generated radioactive waste other than spent fuel and high-level waste.
	Items required for the protection of items important to safety and waste isolation from the hazards of fire.
	Items not intended to perform a safety function but whose failure could impair the capability of other items to perform their intended safety or waste isolation function.
	Items required for physical protection as defined by 10 CFR Part 73.
	Items required to control occupational radiological exposure.

3.5.5 Integration with YMP

Those elements of the existing YMP such as tests, existing test related procedures, test equipment, test facilities, etc., will be addressed during the test planning process to ensure that the Test and Evaluation Program makes use of applicable YMP elements and personnel.

3.6 MGR TESTING

As summarized in Section 3.2, MGR functional test areas include: site characterization, performance confirmation, developmental test and evaluation, operational test and evaluation, and periodic performance testing. Site characterization and performance confirmation test activities are governed by their individual test plans and procedures test functions and therefore are not covered in this MGR T&EP (see Section 3.2). The MGR T&EP defines and develops testing for the test areas of developmental, operational, and periodic performance testing as depicted in Figure 3-14, and described in the following sections.

3.6.1 Developmental Test and Evaluation

Developmental test and evaluation includes development tests to support detailed design and reduce design risks, and qualification tests to verify design compliance with requirements and specifications, and to evaluate compliance with government regulations. Developmental test and evaluation test categories are described in Table 3-2. The Test and Evaluation Matrix (Appendix A) organizes developmental test and evaluation testing according to these categories for the SDDs. Timelines for these categories are depicted in the Preliminary Integrated Test Schedule in Appendix C. A description of ongoing and proposed developmental test and evaluation test planning is provided below. A detailed description of individual development tests is provided in Appendix B.

Table 3-2. Developmental Test and Evaluation Test Categories

DEVELOPMENT TESTS	
Lab	These tests involve the testing of system/component technologies, design concepts, materials and/or fabrication processes. Tests can include the effects of stress, shock, chemicals, the environment, etc.; impacts on materials; and/or development or confirmation of fabrication methods. These tests support the proof of concept design process.
Staging/Mockup	These tests involve simulation, modeling, and analysis, including mockup tests at the developer/supplier or at MGR mockup facilities.
QUALIFICATION TESTS	
Shop	Shop tests are performed at the vendor's plant or test facility. Shop tests include audits/inspections and/or the functional or performance tests of components or systems as required by the design specifications. The tests may include load/limit tests for requirements important to radiological safety, including heavy lift components.
Component Installation	Component installation involves the installation and individual testing of each auxiliary system component, the component interfaces, and the auxiliary system (e.g., testing the cask de-lidding component and interfaces, and testing the complete de-lidding auxiliary system. Component installation also includes interface testing with the cask prep. and cart).. Load/limit tests may be performed if not previously done. Facility/area operating cadres, supported by the vendor, perform tests, execute and revise, as required, the initial system operating and maintenance procedures. Tests are performed with simulated waste form items.
System Installation	System installation involves testing a complete system with its integral auxiliary systems and the physical and functional interface tests with other related systems. System-related event/failure recovery tests may be performed (e.g., testing the uncanistered assembly transfer system, including interfaces with the carrier cask handling system and the disposal container handling system). Vendor personnel and operating personnel will develop the preliminary system operating and maintenance procedures. Vendor personnel provide hands-on training for operating and maintenance teams at the vendor's plant, site or prototype facility. Testing is performed with mockup waste form items.

3.6.1.1 Development Testing

The MGR T&EP uses the latest Viability Assessment design information to identify areas requiring Development Testing, and updates to the extent possible the test identification and description sheets provided in Appendix B. These test description sheets describe waste package materials testing and modeling; waste package fabrication; and surface and subsurface design. Follow-on site-related tests are also identified. They include in situ thermal tests; natural and engineered barriers seismic tests; and engineered barrier system component tests. As test definition and planning matures, these follow-on site tests may be moved to and included in the *Performance Confirmation Plan* (CRWMS M&O 1997b).

3.6.1.2 Qualification Testing

The M&O test organization will oversee the vendors for the verification of the SSCs, utilities, and facilities. The procuring specification will delineate the test requirements as part of the contract package, and the M&O will monitor the test conduct and reporting, and will ensure that the requirements, from the top level system requirements down to the design criteria, are met. It will then be the responsibility of the M&O to properly annotate a conformance verification matrix, which is the database that delineates verification of individual requirements.

The SSCs are identified by the design activity that will specify the form, fit, and function of the SSCs as part of the procurement specification. The M&O will have the oversight responsibility for certifying that the SSCs conform to the drawings, meet the installation specification as depicted in the procurement package, and respond to the requirements as written in the procurement specification.

SSC testing will normally confirm the operational characteristics of the SSCs at the time the test is performed. Stress testing, unless specified in the procurement package, will not be conducted. Operational testing at the SSC level is sufficient verification that the SSCs will perform as required.

Included at this level of testing is the verification of the various utility systems and facilities (including all of the intra-facility components) that perform the major functions of the MGR. Each of these systems will normally be verified by the vendor when the fabrication is complete. Oversight responsibility is delegated to the MGR Test and Evaluation Program. The procurement documentation and the design drawings and specifications will include the requirements that must be verified to ensure proper operation of the utility or facility. In specific cases (e.g., testing of the bridge cranes) safety or stress tests may be required by code, regulation or procurement specification. Other types of stress testing (e.g., simulating an accident) to determine the upper limits of the operational environment are not normally part of the procurement package, but should be included where applicable.

Developmental test and evaluation will be managed by the appropriate design organization with test working group oversight. The design organization will be responsible for reviewing the contractual documents to ensure that proper verification methods are specified and for monitoring the contract activities to ensure that MGR test and evaluation objectives are met. The test working group will be responsible for recording requirement verification in the conformance verification matrix. Status updates will be developed by test working group members and provided to the test support group by the test conductor. Testing at the SSC level will normally be planned, conducted, documented, and retested (if required) by the vendor responsible for the construction, fabrication, and/or installation of the SSC. Oversight is provided by the procuring agency. The risk team will continue to assess risks and perform technical performance management to assist in mitigating critical risks during the design and development activities.

3.6.2 Operational Test and Evaluation

Operational test and evaluation test categories are described in Table 3-3. The Test and Evaluation Matrix (Appendix A, Table A-2) organizes operational test and evaluation tests according to these categories for the SDDs. Appendix B contains test identification sheets for major system integration and startup tests. Timelines for these categories are depicted in the Preliminary Integrated Test Schedule in Appendix C. A description of proposed operational test and evaluation test planning is provided below.

Table 3-3. Operational Test and Evaluation Test Categories

Group Integration	Group integration involves integrated and interface testing of multiple related systems located in the same facility or functional area. For example, it may involve integration testing of waste facility systems with facility and facility auxiliary systems. Test and operating personnel are utilized during realistic shift operations supported by vendor personnel, preliminary operations and maintenance procedures are developed, and operating teams are fully qualified during these tests.
Systems Integration	These tests include the integrated operational testing of multiple major systems using mockup casks, canisters and waste forms (e.g., testing the integrated operation of waste handling building systems with the carrier staging shed handling systems and waste emplacement system). Test and operating personnel are utilized during realistic shift operations and draft operations where maintenance procedures are developed.
Pre-operational Test	A final pre-operational test will be performed integrating all major systems. Final verification of MGR performance against the requirements is a major outcome of this test.
Startup Test	A startup test will be performed on the entire MGR that combines all the SSCs, utility systems, facilities, and processes required to receive, store, process, handle, emplace, and retrieve waste packages. Operating personnel are utilized using baselined operations and maintenance procedures.

The primary focus of the operational test and evaluation activities is planning, testing, and documenting the verification scenarios identified by the verification scenario selection subgroup. As with developmental test and evaluation, test working groups will begin the test planing analysis, perform the test conduct, and document the test results for each scenario. Test working group members will be assigned to the functional organization managed by the test director and augmented by individuals with specific skills from other M&O functional organizations. The specialists will be returned to their parent organization when the duties and responsibilities of the test working group have been satisfied. Each test working group will be chaired by a test conductor who will be charged with the individual responsibility of planning, conducting and documenting the test activities. The test conductor will ensure that all verified requirements are properly annotated in the confirmation verification matrix.

Operational test and evaluation consists of testing groups of logical functions or processes in an operational environment. Advanced planning for operational test and evaluation will identify the major facilities and processes that should be grouped together for the systems integration tests. These processes will test the internal MGR interfaces; the external interfaces; all the processes required for the receipt, processing, and handling of the transportation casks from the various sources; and the handling, processing, emplacement, and removal of the waste packages.

Grouping test scenarios of the SSCs, utility systems, and facilities into logical entities will be the responsibility of the test support group. This selection process should parallel the requirements allocation process (i.e., the process of identifying the requirements allocated in each SDD) to ensure the timely sequencing of the design activities to support the systems test approach for the MGR. Testing of these groupings will constitute the systems integration tests for the MGR.

Systems integration tests will confirm the functional flows required to support the MGR operations along with safety and security scenarios that simulate accidents and unplanned conditions, stress tests that approach the design limits of the key components, and the critical time line for establishing

various operational environments. They will verify operational conditions using representative component faults and unscheduled maintenance actions. All the operational conditions, both internal and external to the MGR, will be verified.

Systems integration tests will be planned, conducted and documented by the appropriate test working groups. As the test planning for each systems integration test is completed, a test readiness review will be held to determine the need for a dry run of the test procedure and a run-for-record to verify the functionality of the SSCs, facilities, and/or processes under test. Dry runs are conducted to check the test procedures for completeness and proper sequencing of test events; compliance with applicable environment, health and safety controls; proper operation of the MGR equipment and any test support equipment required to support test activities; and to ensure that test operators as well as equipment operators are properly trained to conduct the test and operate the equipment. Anomalous conditions encountered during the dry run will be documented and resolved prior to the run-for-record.

A final operational test will be performed prior to turnover to operational personnel for the startup test. Anomalous conditions will be documented as they occur and are processed for resolution using the anomaly resolution process established for the systems integration tests. Verification of the requirements will be noted in the confirmation verification matrix.

A startup test will be performed on the entire MGR that combines all of the SSCs, utility systems, facilities, and processes required to receive, prepare, emplace and move waste (e.g., for recovery or retrieval, if required). This test will be conducted in a two phase approach with a dry run to check the procedures, equipment, and personnel, and a run-for-record to verify the requirements and processes necessary to handle and dispose of waste.

A special purpose test working group will be appointed as the MGR Test and Evaluation Program activities mature, to plan, conduct, and document the startup test for the MGR. The management and conduct of the system test working group will be similar to the policies and procedures developed for the other test working groups. Personnel with test experience, gained from membership in other test working groups, will be used to fulfill the needs of the system test working group. A test conductor will be appointed to manage the test working group and the resultant activities.

Test reports from both the systems integration tests and the startup test will include the respective test plan, run-for-record test procedures (as noted by the test operator and the QA representative during the run-for-record), any and all analyses of the test data, all anomaly reports (with specific attention addressed to any anomalies that remain open when the report is completed), a summary account of the test, and a conclusion and recommendation from the test team. These reports become the permanent record of the MGR Test and Evaluation Program. Completion of the startup test for the MGR will complete the operational test and evaluation phase of the test program.

3.6.3 Periodic Performance Testing

Periodic performance testing activities will begin during systems testing. Operational sensors and indicators will be exercised to ensure that performance during emplacement can be adequately monitored to provide the data necessary to support periodic performance testing activities and to mitigate the risk of accident and exposure in manned activities during the operational phase. Periodic performance testing will continue during emplacement and end at closure. Periodic performance testing efforts will include the planned/periodic and unplanned tests described below and identified in the Test and Evaluation Matrix (Appendix A, Table A-3).

- **Planned/Periodic Tests**
  - System Integrity and Re-verification: tests including systems functions, safety limits and failure recovery verification, welding, pressure, corrosion, contamination, leaks, etc.
  - Post Preventive Maintenance Tests
  - Compliance Verification: inspections for operational procedures, surveillance systems, and documentation and training verification
- **Unplanned Tests**
  - Procedures Development and Optimization
  - Equipment or Software Re-Configuration (or Upgrade Tests): including interface verification
  - Post Major Component Failure
  - Casualty Event Recovery: including load drops, and simulating design basis accident conditions for fire, power, ventilation, etc.; design basis events; verification of event detection, and failure recovery equipment.

3.6.4 Test and Evaluation Matrix

Appendix A is a preliminary test and evaluation matrix for MGR SSCs. This matrix charts SDDs with associated test categories, types, and analysis. The SDDs are organized (grouped) according to the sequence of testing and the interfaces tested. Testing will begin with the test categories listed on the left of the table and proceed to the test categories on the right of the table. For each of the test categories, the sequence of testing will begin with the items listed at the top of the list and will proceed to the bottom. Where possible, SDDs were also grouped according to the interfaces tested. A key is provided to explain the test abbreviations and interfaces. This preliminary matrix identifies tests for surface facilities and supporting SDDs.

This preliminary matrix includes tests for surface SDDs and development, lab, and mockup categories. Future revisions to the MGR T&EP will identify tests for all test categories and SDDs. Future revisions will also delineate the SCCs for each of the major SDD systems, since many of the SDDs are too large for vendor lab or shop testing. Additional SSCs that are classified as safety critical, will require more rigorous qualification testing.

The purpose for developing this test and evaluation matrix is to provide the foundation for the confirmation verification matrix described in Section 3.5.3. As the MGR requirements and design development progresses, the intent is to note in the test and evaluation matrix the requirements allocated to each test. As tests are conducted, analyzed and recorded (see Section 3.5.2), this matrix will track and document verification performed according to MGR requirements. This matrix will be maintained by the M&O test organization and updated as testing, demonstration or analysis proceeds to verify the MGR requirements.

3.6.5 Test Description

The MGR T&EP uses the latest Viability Assessment design information to identify areas requiring development testing, and updates, to the extent possible, the test identification and description sheets provided in Appendix B. Test descriptions include ongoing and proposed development lab and mockup tests for waste package materials, waste package development, surface design and subsurface design. A preliminary description of proposed site-related tests, startup, and systems integration tests are also included.

These test descriptions identify requirements and test objectives. Where applicable, test titles include the SDD identification number in order to provide a cross reference with Appendix A. A summary of test descriptions is provided below.

TESTS 1-3: Follow-on Site Related Tests–Included are the in situ thermal test, seismic effects on natural and engineered barrier tests, and the engineered barrier system component tests. As test definition and planning matures, these follow-on site tests may be moved to and included in the *Performance Confirmation Plan* (CRWMS M&O 1997b).

TESTS 4-10: Waste Package Materials Testing–These scope sheets describe ongoing and proposed waste package material testing and modeling activities. The waste package materials testing and modeling effort is divided into two major areas: waste package/engineered barrier system materials testing and modeling, and waste form materials testing and modeling. The former provides input to waste package design as well as performance assessment, while the latter mainly provides input to performance assessment regarding the radionuclide source term.

Activities are defined in the scientific investigation plans generated by the Lawrence Livermore National Laboratory. The requirements are consistent with the current MGR requirements flow down process, the *Engineered Barrier Design Requirements Document* (YMP 1993) or the *Waste Package Development Technical Document* (CRWMS M&O 1996c). The scientific investigation plans are further described by activity plans that are prepared by Lawrence Livermore National Laboratory.

Most of the work defined in the waste package/engineered barrier system materials testing and modeling task is performed at Lawrence Livermore National Laboratory. The main focus is on container materials and is subdivided into five technical areas: long-term corrosion; humid air corrosion; crack growth tests; electrochemical potential studies; and microbiologically influenced corrosion. Other efforts include: basket material corrosion, ceramic materials testing, and engineered barrier materials testing. In addition, models are developed for each degradation mode to permit the long-term performance to be determined.

The waste form materials testing and modeling task is performed mainly by the national laboratories. Pacific Northwest National Laboratories is responsible for oxidation and flow-through release testing of spent fuel. Argonne National Laboratory is responsible for unsaturated testing of both spent fuel and glass. Lawrence Livermore National Laboratory is responsible for the modeling of the behavior of both waste forms. Argonne National Laboratory is also responsible for the procurement and characterization of spent nuclear fuel (SNF) approved testing materials. Future planning efforts include tests on DOE SNF and SNF cladding and hardware.

TESTS 11-15: Waste Package Development–These test descriptions depict Framatome Technologies activities to provide proof of concept testing for fabrication and weld processes. These tests also describe mockup testing to verify structural requirements during proposed quarter scale, and modified quarter scale tests. Four full-scale waste package prototypes will be fabricated to support system mockup, integration, and startup tests. Configuration and test utilization for the full-scale prototypes is to be determined.

TESTS 16-28: Subsurface Repository Design Functions, Instrumentation, Controls and Remote Systems–Due to the nature of the design/development cycle associated with developing reliable and robust instrumentation, controls, and remotely operated systems, the following development test strategy is comprised of three phases that address the need to reduce risks by testing and validating concepts throughout the design/development cycle. The three test phases are lab tests, integration technology tests, and mockup tests.

Lab tests are initial tests that will be used to evaluate and confirm the suitability and availability of core technologies. These tests will focus on technologies that are relatively new or that may not have extensive precedence in applications or environments similar to what will be found in the subsurface repository.

Integration technology tests are essentially lab tests conducted on a larger scale to test the feasibility of integrating many technologies. These tests are performed and anomalies are resolved prior to the mockup tests. Engineering models will be developed to test the system integration aspects of design concepts and technologies. The integration of diverse off-the-shelf systems, products, components and technologies into more complex systems is an important step in the design/development process. Small scale, operation integration technology tests and engineering models will be developed to serve as testbeds for testing and demonstrating system level integration of hardware and software design concepts.

Mockup testing will involve development, environmental testing, and field testing of prototype systems. These comprehensive tests will be used to validate overall system design concepts, system

performance, and reliability, and will be conducted prior to the release of final design packages. These tests will include the evaluation of fully operational prototype systems of the emplacement gantry, transport locomotive, waste package transporter, waste package loading/unloading equipment, and remote inspection gantry.

TESTS 29-34: Surface Lab and Mockup Tests–These tests describe proposed proof of concept investigations for dual purpose canister cool-down, underwater opening, basket handling, helium and nitrogen inerting, and low level waste supercompaction lab testing. These tests also address optimizing waste handling operations for achieving limits that are as low as is reasonably achievable. Minimizing cask/carrier preparation handling durations and a variety of equipment maintenance durations for repository stations will help control the risk of accident/exposure during operations. It is anticipated that waste handling/preparation including assembly transfer will be prototyped prior to integration and startup testing. Although the test schedules (see Section 3.7 below) depict surface mockup testing, a test description for waste handling/preparation and assembly transfer prototyping is not included in Appendix B and will be provided in a future revision.

TESTS 35-39: Startup and System Integration Tests–Appendix B provides preliminary descriptions of startup and top level systems integration tests. Test requirements and objectives listed are based on the current analysis of MGR operating concepts, requirement definition, and design development. A test description sheet for final pre-operational testing is not included in Appendix B and will be provided in future revisions.

3.7 INTEGRATED TEST SCHEDULE

Appendix C provides a draft test schedule for the MGR Test and Evaluation Program. The test categories described in the preceding sections are shown along with key MGR YMP milestones. Appendix C also provides individual schedules for follow-on site, lab, mockup and integration test activities. Individual tests identified/depicted are described in Appendix B. A description of the individual test schedules is provided below:

Figure C-1: An integrated test schedule showing the relationships of the major test functional areas: site characterization; developmental test and evaluation; operational test and evaluation; periodic performance testing; and performance confirmation (see Section 3.2). Qualification testing is divided into its subcategories: shop and component installation, and system installation testing (see Section 3.6.1.2).

Figure C-2: Follow-on site tests and their relationship to the MGR test areas as depicted in Figure C-1. These tests are described in Appendix B, test description sheets 1-3. As test definition and planning matures, these follow-on site tests may be incorporated in the performance confirmation testing.

Figure C-3: Waste package materials and development lab tests. These tests are described in Appendix B, test description sheets 4-14.

Figure C-4: Subsurface instrumentation, controls and remote system lab tests. These tests are described in Appendix B, test description sheets 16-22.

Figure C-5: Surface waste handling operations lab tests. These tests are described in Appendix B, test description sheets 29-34.

Figure C-6: Mockup, system integration and startup tests. These tests are described in Appendix B, test description sheets 15, 23-28 and 35-38.

3.8 CONCLUSIONS

As stated in Section 3.1, the MGR T&EP uses the latest Viability Assessment design information to identify areas requiring development testing, and updates to the extent possible the test identification and description sheets provided in Appendix B. These test description sheets identify those SSCs that require research and development and describe proof of concept and prototype testing to support detailed design and reduce design risks.

This MGR T&EP reflects the extent of test planning and analysis that can be reasonably conducted given the current status of the MGR requirements and design development. The MGR T&EP will be updated as the MGR requirements flowdown process progresses to the extent sufficient to result in refinement and increased detail in test identification, description and planning. The intent is to revise this MGR T&EP prior to License Application such that it contains the necessary detail to meet the needs of supporting the appropriate sections in the License Application in accordance with 10 CFR 60.21(c)(14), (15)(iv), and (15)(v).

4. REFERENCES

4.1 DOCUMENTS CITED

CRWMS M&O (Civilian Radioactive Waste Management System Management and Operating Contractor) 1996a. *Mined Geologic Disposal System Functional Analysis Document.* B00000000-01717-1708-00006 REV 01. October 1994. Las Vegas, Nevada: Author. (MOL.19970124.0395)

CRWMS M&O 1996b. *Performance Confirmation Concept Study Report.* B00000000-01717-5705-00035 REV 02. Las Vegas, Nevada: Author. (MOL.19971105.0425)

CRWMS M&O 1996c. *Waste Package Development Technical Document.* BBA000000-01717-5705-00009 REV 01. Las Vegas, Nevada: Author. (MOL.19961029.0013)

CRWMS M&O 1997a. *Mined Geologic Disposal System Concept of Operations.* B00000000-01717-4200-00004 REV 01. Las Vegas, Nevada: Author. (MOL.19980205.0050)

CRWMS M&O 1997b. *Performance Confirmation Plan.* B00000000-00841-4600-00002 REV 00. September 1997. Las Vegas, Nevada: Author. (MOL.19980204.1022)

CRWMS M&O 1997c. *Waste Package Closure Methods Report.* BBA000000-01717-5705-00013 REV 00. August 22, 1997. Las Vegas, Nevada: Author. (MOL.19980128.0134)

CRWMS M&O 1997d. *Waste Package Nondestructive Examination Methods Report.* BBA000000-01717-5705-00014 REV 00. September 5, 1997. Las Vegas, Nevada: Author. (MOL.19980107.0465)

CRWMS M&O 1997e. *Waste Package Fabrication Process Report.* BBA000000-01717-2500-00010 REV 02. August 27, 1997. Las Vegas, Nevada: Author. (MOL.19971218.0275)

CRWMS M&O 1998. *Controlled Design Assumptions Document.* B00000000-01717-4600-00032 REV 04 ICN 4. Las Vegas, Nevada: Author. (MOL.19980511.0260)

DOE (U.S. Department of Energy) 1995a. *Nuclear Waste Policy Act, As Amended with Appropriations Acts Appended.* DOE/RW-0438, Rev. 1. Washington, D.C.: U.S. Government Printing Office. (HQO.19950124.0001)

DOE 1995b. *OCRWM Test and Evaluation Master Plan.* A00000000-00811-4600-00009 REV 00. July 1995. Vienna, Virginia: Office of Civilian Radioactive Waste Management. (MOL.19960325.0583)

DOE 1996. *Civilian Radioactive Waste Management System Requirements Document.* A00000000-00811-1708-00003 REV 03; DOE/RW-0406. November 1996. Vienna, Virginia: Office of Civilian Radioactive Waste Management. (HQO.19961112.0003)

DOE 1997. *Quality Assurance Requirements and Description.* DOE/RW-0333P Rev. 07. Washington, D.C.: Author. (MOL.19970731.0427)

NRC 1997. *Issue Resolution Status Report (Key Technical Issue: Structural Deformation and Seismicity).* Rev. 0. Washington, D.C.: Division of Waste Management, Office of Nuclear Material Safety and Safeguards, U.S. Nuclear Regulatory Commission. (MOL.19980219.0882)

YMP (Yucca Mountain Site Characterization Project) 1992. *Risk Management Program Plan.* YMP/91-29. February 1992. Las Vegas, Nevada: Yucca Mountain Site Characterization Office. (NNA.19920428.0016)

YMP 1993. *Engineered Barrier Design Requirements Document.* YMP/CM-0024, Rev. 00. Las Vegas, Nevada: Yucca Mountain Site Characterization Office. 224487.

YMP 1997. *Q-List.* YMP/90-55Q, Rev. 04. Las Vegas, Nevada: Yucca Mountain Site Characterization Office. (MOL.19970714.0474)

YMP 1998. *Mined Geologic Disposal System Requirements Document.* YMP/CM-0025, Rev. 03. Las Vegas, Nevada: Yucca Mountain Site Characterization Office.

4.2 DIRECTIVES, REGULATIONS, AND PROCEDURES

10 CFR 20. Energy: Standards for Protection Against Radiation. Washington, D.C.: U.S. Government Printing Office.

10 CFR 60. Energy: Disposal of High-Level Radioactive Wastes in Geologic Repositories. Washington, D.C.: U.S. Government Printing Office.

10 CFR 71. Energy: Packaging and Transportation of Radioactive Material. Washington, D.C.: U.S. Government Printing Office.

10 CFR 72. Energy: Licensing Requirements for the Independent Storage of Spent Nuclear Fuel and High-level Radioactive Waste. Washington, D.C.: U.S. Government Printing Office.

10 CFR 73. Energy: Physical Protection of Plants and Materials. Washington, D.C.: U.S. Government Printing Office.

10 CFR 960. Energy: General Guidelines for the Recommendation of Sites for Nuclear Waste Repositories. Washington, D.C.: U.S. Government Printing Office.

NUREG 1563. Branch Technical Position on the Use of Expert Elicitation in the High-Level Radioactive Waste Program. Washington, D.C.: U.S. Government Printing Office.

ASTM A516/A516M-90. Pressure Vessel Plates, Carbon Steel, for Moderate- and Lower-Temperature Service. West Conshohocken, Pennsylvania: American Society for Testing and Materials.

ASTM B443-93e1. Nickel-Chromium-Molybdenum-Columbium Alloy (UNS N06625) Plate, Sheet, and Strip. West Conshohocken, Pennsylvania: American Society for Testing and Materials.

Procedures

AP-6.1Q, *Distribution, Maintenance, and Use of Controlled and Managed Documents*
AP-17.1Q, *Record Source Responsibilities for Inclusionary Records*
QAP-2-0, *Conduct of Activities*
QAP-2-3, *Classification of Permanent Items*
QAP-2-6, *Readiness Review*
QAP-3-2, *Design Verification*
QAP-SI-0, *Computer Software Qualification*
QAP-SI-3, *Software Configuration Management*
YAP-5.7Q, *Testing Field Work Packages*

INTENTIONALLY LEFT BLANK

5. ACRONYMS AND ABBREVIATIONS

BWR	Boiling Water Reactor
CFR	Code of Federal Regulations
CHLW	Civilian High-Level Waste
CRD	Civilian Radioactive Waste Management System Requirements Document
CRWMS	Civilian Radioactive Waste Management System
DOE	U.S. Department of Energy
DHLW	Defense High-Level Waste
FY	Fiscal Year
M&O	Management and Operating Contractor
MGR	Monitored Geologic Repository
MTU	Metric Tons of Uranium
NRC	U.S. Nuclear Regulatory Commission
PWR	Pressurized Water Reactor
QA	Quality Assurance
QARD	Quality Assurance Requirements and Description
SAR	Safety Analysis Report
SDD	System Description Document
SNF	Spent Nuclear Fuel
SSC	Structures, Systems, and Components
T&EP	Test and Evaluation Plan
TBD	To Be Determined
TBV	To Be Verified
YMP	Yucca Mountain Site Characterization Project

INTENTIONALLY LEFT BLANK

APPENDIX A
PRELIMINARY TEST AND EVALUATION MATRIX

APPENDIX A
PRELIMINARY TEST AND EVALUATION MATRIX

This Preliminary Test and Evaluation Matrix identifies specific tests to be conducted for SDDs during developmental, operational, and periodic performance testing. A description of the specific test types referenced in the matrix is provided in Table A-1. In order to facilitate reading the Preliminary Test and Evaluation Matrix (Tables A-2 and A-3), a sample test summary notation and abbreviations listing is provided below.

SAMPLE TEST SUMMARY NOTATION

For Site Electrical Power System (SU44), the matrix identifies four separate DT&E system installation tests described in Table A-1 using the following notation:

F	-	Equipment/Software Functional Test
L1	-	Load and Limit Test
M2	-	Systems Procedures Test
I1	-	Component and System Interface Test
SU53, SU42-45	-	Interfaces tested: Offsite Utilities System (SU53), Site Communication System (SU42), Site Water System (SU43), Site Electrical Power System (SU44), and the Site Compressed Air System (SU45).

ACRONYMS AND ABBREVIATIONS

ALARA	As Low As Reasonably Achievable
A/R	As Required
AUX	Auxiliary
CAN	Canister
COM	Component(s)
DC	Disposal Container
DHLW	Defense High-Level Waste
FAC	Facility
GEN	Generator
ID	Identification
IMPROV	Improvement
MAINT	Maintenance
MON	Monitoring
MOS	Months
N/A	Not Applicable
NDE	Nondestructive Examination Equipment
OPM	Onsite Prime Mover
OPS	Operations
SIT	System Integration Test
SNF	Spent Nuclear Fuel
SS	Sub-Surface
STBY	Standby
SU	Surface
SURV	Surveillance
SYS	System(s)
TBD	To Be Determined
UTIL	Utility
WHB	Waste Handling Building
WP	Waste Package

Table A-1. Test Type

Code		Test Type Description
A		**Configuration Audit/Inspection** includes acceptance by way of documentation audit, including system configuration, interface verification, design drawings, spares and tests, training and maintenance documents, etc. The acceptance may include equipment, visual inspections, and measurements to verify the system or equipment configuration at the seller's shop or post shipment.
D		**Development Tests for New/Critical Processes or Materials**
	1	Material tests include metal, concrete, radiation tolerant material etc.
	2	New/unproven methods or processing including WP welding, construction/fabrication methods, etc.
F		**Equipment/Software Function Test**, including systems or component operating functions, controls, displays, and peripheral functions. Includes tests for the physical and programmed travel and rate limits for safety related functions.
P		**System Performance Test**
	1	Performance effectiveness, including throughput, accuracy/errors, efficiency, utilization, signal quality, etc.
	2	Reliability and maintainability.
	3	System environmental susceptibility to temperature, humidity, radiation, vibration, etc.
E		**Site Environmental Tests**
	1	On and off site soil, water, air, etc. sampling and analysis.
	2	Surface contamination tests for facility areas, hot cells, pools, and handling equipment.
I		**Interface Tests**
	1	Component and system interface verification during installation.
	2	Combined system or site segment, operational, and functional interface verification.
L		**System Safety Limit & Integrity Tests or Inspections** including, but not limited to, the following:
	1	Load and limit tests for power and load bearing safety equipment and components.
	2	Control, braking, and other safety tests for waste transporters and safety related material handlers.
	3	Pressure, leak, and isolation tests for hazardous and radiological process equipment, vessels, piping, and pools.
	4	ALARA and shielding effectiveness tests for material handling barriers and shields, process vessels, piping, and pool components.
	5	Component inspections and associated analysis including, but not limited to, wear, stress, corrosion, etc.
	6	Weld and structural integrity tests for engineered barrier and other safety class structural, mechanical, and containment systems.
L	7	Component certification including instrument calibration and periodic retro-fit typically for casks, canisters, disposal containers, and related support equipment. Includes calibration and certification testing.

Table A-1. Test Type (Continued)

Code		Test Type Description
R		**Casualty Event Recovery Tests** including load drops and simulating design basis accident conditions for fire, power, ventilation, etc.; design basis events; verification of event detection, and failure recovery equipment.
M		**Operations/Maintenance Methods Development & Evaluation Tests** considering the development and improvement of operating methods and procedures, including minimizing radiation exposures associated with normal, off-normal, and maintenance activities, as follows:
	1	Component procedures test and development (auxiliary systems and/or multiple component stations).
	2	System procedures test and development (multiple system stations).
	3	Integrated system, test, and administrative Site Operating Procedures development.

Table A-2. Preliminary Developmental and Operational Test and Evaluation Matrix

MGR DEVELOPMENTAL AND OPERATIONAL TEST AND EVALUATION								
SDD		Developmental Test and Evaluation					Operational Test and Evaluation	
ID	SDD Title	Lab	Shop	Mockup	Component Installation	System Installation	Group Integration	Systems Integration
SU01	MGR Site Layout	E1 SOILS			A CIVIL	A CIVIL	A CIVIL	
SU53	Offsite Utilities System				A, F, M1	F, L1, M2 I1 (SU42-44)	P1, R, M3 I2 (SU42-44)	F, M3
SU44	Site Electrical Power System		A, F, L1, STBY GEN		A, F, M1	F, L1, M2 I1 (SU53, 42-45)	P1, R, M3 I2 (SU53, 42-45)	F, M3
SU43	Site Water System				A, F, M1	F, L3, M2 I1 (SU53, 42-45)	P1, R, M3 I2 (SU53, 42-45)	F, M3
SU42	Site Communications System				A, F, M1	F, M2 I1(SU53, 42-54)	P1, R, M3 I2 (SU53, 42-45)	F, M3
SU45	Site Compressed Air System		A, F, L3, COMPRESSOR		A, F, M1	F, L1, M2 I1 (SU08)	P1, R, M3 I2 (SU08)	F, M3
SU17	Offsite Rail and Road System							
SU54	General Site Transportation System							
SS16	Subsurface Development Transportation System							
SU48	Security and Safeguards System							
SU40	Emergency Response System							
SU41	Health Safety System							
SU49	Surface Environmental Monitoring System							
SU47	Site-Generated Hazardous & Non-hazardous Waste Disposal System							
SU50	Administration System							
SU51	ntenance & Supply System							

Table A-2. Preliminary Developmental and Operational Test and Evaluation Matrix (Continued)

MGR DEVELOPMENTAL AND OPERATIONAL TEST AND EVALUATION								
SDD		Developmental Test and Evaluation					Operational Test and Evaluation	
ID	SDD Title	Lab	Shop	Mockup	Component Installation	System Installation	Group Integration	Systems Integration
SU52	Central Command & Control Operations System			F, P1, M1, M2, M3 (WITH SS12)				
SS12	Subsurface Central Control System			F, P1, M1, M2, M3 (WITH SU52)				
SS25	Subsurface Excavation System							
SS15	Muck Handling System							
SS06	Subsurface Electrical Distribution System							
SS26	Subsurface Fire Suppression System							
SS09	Subsurface Water Distribution System							
SS08	Subsurface Compressed Air System							
SS20	Subsurface Water Collection/Removal System							
SS01	Subsurface Facility System							
SS10	Subsurface Safety and Monitoring System							
SS03	Ground Control System							
SS05	Subsurface Ventilation System							
SS17	Waste Emplacement System			L1, L2, F, R, M1				
SS24	Subsurface Emplacement Transportation System							
SS21	Waste Retrieval System			L1, L2, F, R, M1				
SS18	Backfill Emplacement System							

Table A-2. Preliminary Developmental and Operational Test and Evaluation Matrix (Continued)

MGR DEVELOPMENTAL AND OPERATIONAL TEST AND EVALUATION								
SDD		Developmental Test and Evaluation					Operational Test and Evaluation	
ID	SDD Title	Lab	Shop	Mockup	Component Installation	System Installation	Group Integration	Systems Integration
SS19	Subsurface Closure & Seal System							
SS02	Engineered Barrier System							
WP01	Uncanistered SNF DC	D1		D2, L6, L7, F, R				
WP02	Canistered SNF DC	D1		D2, L6, L7, F, R				
WP03	DHLW DC	D1		D2, L6, L7, F, R				
WP04	DOE Waste Forms DC	D1		D2, L6, L7, F, R				
SS14	PC System							
SU05	Carrier Preparation Building System				A, F M1 I1 (AUX SYS),SU08/06	F, L1,L4, M2 I1 (AUX/UTIL)	P1, R, M3 I2 (SS/SYS)	F, M3 I2, ALL SYS
SU08	Carrier Preparation Building Materials Handling System		A, F, L1 CRANE		A, F, M1 I1, SU05,SU45	F, L1, M2 I1 (FAC AUX)	P1, R, M3 I2 (SU16)	F, M3 I2 ALL SYS
SU16	Carrier/Cask Transport System		A, F, L1 OPM	L1	A, F M1 I1 (SU02, 05, 08)	F, L1, M2 I1 (SU02, 05, 08, 48)	P1, R, M3 I2 (SU02, 05, 08, 48)	F, M3 I2 ALL SYS
SU02	WHB System				A, F, M1 I1 (AUX SYS)	F, L, M2 (AUX SYS) I1 (AUX & UTIL)	P, R, M3 I2 (WHB SYS)	F, M3 I2 ALL SYS
SU18	WHB Electrical System		A, F, BACKUP CONTROLS		A, F, MI (COMP) I1 (SU02/AUX SYS)	F, L, M2 I1 (SU09-13, 22, 20,33)	F, R, M3 I2 (WHB SYS, SU44)	F, M3 I2 ALL SYS
SU33	WHB Fire Protection System				A, F, M1 (COMP) I1 (SU02/AUX SYS)	F, L3, M2 I1 (SU02)	P1, R, M3 I2 (WHB SYS)	F, M3 I2 ALL SYS
SU22	WHB Ventilation System		A, F, P FANS		A, F, M1 I1 (SU02 & AUX)	F, L, M2 I1 (SU02 SYS, SU18, I1, 29, 33)	P, R, M3 I2 (WHB SYS)	F, M3
SU09	Carrier/Cask Handling System		A, F, L1 CRANES	P1, F, M1, L1 OPS & MAINT METHODS	A, F, M1 I1 (SU02 SYS)	F, L, M2 I1 (SU02 SYS, SU10, 11, 13, 16)	P1, R, M3 I2 (SU10, 11, 13, 16)	F, M2 I2 ALL SYS

Table A-2. Preliminary Developmental and O[illegible]ational Test and Evaluation Matrix (Continued)

MGR DEVELOPMENTAL AND OPERATIONAL TEST AND EVALUATION								
SDD		Developmental Test and Evaluation					Operational Test and Evaluation	
ID	SDD Title	Lab	Shop	Mockup	Component Installation	System Installation	Group Integration	Systems Integration
	Assembly Transfer System		A, F, L1 SNF, DC, CASK HANDLER, TOOLS PURGE, COOLING	AS IN SU09	A, F, M1 I1 (SU02 SYS)	F, L, M2 I1 (SU09, 13)	P1, R, M3 I2 (SU9, 11, 13)	F, M3 I2 ALL SYS
SU11	Canister Transfer System		A, F, L1 CAN HANDLER	AS IN SU09	A, F, M1 I1 (SU02 SYS)	F, L, M2 I1 (SU09, 13)	P1, R, M3 I2 (SU09, 10, 13)	F, M3 I2 ALL SYS
SU13	DC Handling System		A, F, L1 CRANE WELD/NDE	AS IN SU09	A, F, M1 I1 (SU02 SYS)	F, L, M2 I1 (SU10, 11, 24, 29)	P1, R, M3 I2 (SU09, 10, 11, 12, & SS17)	F, M3 I2 ALL SYS
SU12	WP Remediation System		A, F, L1 CRANE DC OPEN TOOLS MAINT TOOLS SURVEY EQUIP	AS IN SU09	F, L, M2 I1 (SU02, AUX SYS)	F, L, M2 I1 (SU13)	P1, R, M3 I2 (SU13, 10, 11)	F, M3 I2 ALL SYS
SU29	WHB Radiological Monitoring System		A, F, (DATA SYS & STACK MON)	F, P1, M1, M2, M3 (WITH SU52)	F, M1 I1 (ALL WHB)	F, L7, M2 I1 (SU02 SYS)	P1, R, M3 I2 (SU02 SYS)	F, M3 I2 ALL SYS
SU04	Waste Treatment Building System							
SU24	Waste Treatment Building Ventilation System							
SU37	Site-Generated Radiological Waste Handling System							

Table A-3. Preliminary Periodic Performance Test and Evaluation Matrix

MGR PERIODIC PERFORMANCE TESTING (Frequency in Weeks/Months)						
ID	SDD Title	Preventive Maintenance	Compliance Verification	System Integrity and Re-Verification	Casualty Event Recovery	Procedures Development
SU01	MGR Site Layout					
SU53	Offsite Utilities System					
SU44	Site Electrical Power System					
SU43	Site Waste System					
SU42	Site Communications System					
SU45	Site Compressed Air System					
SU17	Offsite Rail and Road System					
SU54	General Site Transportation System					
SS16	Subsurface Development Transportation System					
SU48	Security and Safeguards System					
SU40	Emergency Response System					
SU41	Health Safety System					
SU49	Surface Environmental Monitoring System					
SU47	Site-Generated Hazardous & Nonhazardous Waste Disposal System					
SU50	Administration System					
SU[illegible]	Maintenance & Supply System					

Table A-3. Preliminary Periodic Perfor[illegible]e Test and Evaluation Matrix (Continued)

MGR PERIODIC PERFORMANCE TESTING (Frequency in Weeks/Months)						
ID	SDD Title	Preventive Maintenance	Compliance Verification	System Integrity and Re-Verification	Casualty Event Recovery	Procedures Development
SU52	Central Command & Control Operations System					
SS12	Subsurface Central Control System					
SS25	Subsurface Excavation System					
SS15	Muck Handling System					
SS06	Subsurface Electrical Distribution System					
SS26	Subsurface Fire Suppression System					
SS09	Subsurface Water Distribution System					
SS08	Subsurface Compressed Air System					
SS20	Subsurface Water Collection/Removal System					
SS01	Subsurface Facility System					
SS10	Subsurface Safety and Monitoring System					
SS03	Ground Control System					
SS05	Subsurface Ventilation System					
SS17	Waste Emplacement System					
SS24	Subsurface Emplacement Transportation System					
SS21	Waste Retrieval System					

Table A-3. Preliminary Periodic Performance Test and Evaluation Matrix (Continued)

MGR PERIODIC PERFORMANCE TESTING (Frequency in Weeks/Months)						
ID	SDD Title	Preventive Maintenance	Compliance Verification	System Integrity and Re-Verification	Casualty Event Recovery	Procedures Development
SS18	Backfill Emplacement System					
SS19	Subsurface Closure & Seal System					
SS02	Engineered Barrier System					
WP01	Uncanistered SNF DC					
WP02	Canistered SNF DC					
WP03	DHLW DC					
WP04	DOE Waste Forms DC					
SS14	PC System					
SU05	Carrier Preparation Building System					
SU08	Carrier Preparation Building Materials Handling System					
SU16	Carrier/Cask Transport System					
SU02	WHB System	3 MOS AUX SYS				
SU18	WHB Electrical System	3 MOS SAFETY SYS	12 MOS SAFETY SYS	14-18 MOS SAFETY SYS	12-18 MOS SAFETY SYS	3 MOS-SURV A/R-IMPROV
SU33	WHB Fire Protection System	3 MOS	6-12 MOS	14-18 MOS	12-18 MOS	3 MOS-SURV A/R IMPROV
SU22	WHB Ventilation System	3 MOS SAFETY SYS	12 MOS	N/A	12-18 MOS	AS IN SU18
SU09	Carrier/Cask Handling System	3 MOS	12 MOS	14-18 MOS HEAVY LIFT	12-18 MOS	AS IN SU18

Table A-3. Preliminary Periodic Perfor[illegible]e Test and Evaluation Matrix (Continued)

MGR PERIODIC PERFORMANCE TESTING (Frequency In Weeks/Months)						
ID	SDD Title	Preventive Maintenance	Compliance Verification	System Integrity and Re-Verification	Casualty Event Recovery	Procedures Development
SU10	Assembly Transfer System	1 MOS	6-12 MOS	14-18 MOS SNF HANDLE	12-18 MOS	AS IN SU18
SU11	Canister Transfer System	3 MOS	12 MOS	14-18 MOS	12-18 MOS	AS IN SU18
SU13	DC Handling System	1 MOS WELD 1 MOS HANDLE	6-12 MOS 6-12 MOS	N/A 14-18 MOS	12-18 MOS 12-18 MOS	AS IN SU18 AS IN SU18
SU12	WP Remediation System	3 MOS TOOLS 3 MOS HANDLE	12 MOS 12 MOS	N/A 14-18 MOS	12-18 MOS 12-18 MOS	AS IN SU18 AS IN SU18
SU29	WHB Radiological Monitoring System	1 MOS	6 MOS	N/A	12-18 MOS	AS IN SU18
SU04	Waste Treatment Building System					
SU24	Waste Treatment Building Ventilation System					
SU37	Site-Generated Radiological Waste Handling System					

INTENTIONALLY LEFT BLANK

APPENDIX B
TEST DESCRIPTIONS

APPENDIX B TEST DESCRIPTIONS B-1

TEST 1 Scientific Investigation: Drift Scale Test (In Situ Thermal Test) B-3

TEST 2 Scientific Investigation: Seismic Effects on Natural and Engineered Barriers B-7

TEST 3 Scientific Investigation: Engineered Barrier System Component Testing B-11

TEST 4 High Level Waste Glass Alteration and High Level Waste Performance Under Unsaturated Conditions Laboratory Tests B-15

TEST 5 Spent Nuclear Fuel Oxidation Response Laboratory Tests B-17

TEST 6 Spent Nuclear Fuel Performance Under Flow-through and Saturated Conditions Laboratory Tests B-19

TEST 7 Laboratory Tests: Long-Term Barrier Materials Performance, Metal Barrier Long-Term Corrosion Testing, Microbiologically Influenced Corrosion, and Selected Corrosion Testing Studies B-21

TEST 8 Humid Air Corrosion Laboratory Tests B-25

TEST 9 Electrochemical and Stress-Corrosion Cracking Performance Laboratory Tests B-29

TEST 10 Basket Materials Performance Test Laboratory Tests B-31

TEST 11 Waste Package Closure Methods Laboratory Tests B-33

TEST 12 Waste Package Nondestructive Examination Methods Laboratory Tests .. B-37

TEST 13 Waste Package Fabrication Process Laboratory Tests B-41

TEST 14 Waste Package Operations Phase II Laboratory Tests B-43

TEST 15 Waste Package Quarter Scale and Modified Quarter Scale Mockup Tests B-45

TEST 16 Laboratory Test: Subsurface Communication Technologies B-47

TEST 17 Laboratory Test: Remote Vehicle Control Systems B-49

TEST 18 Laboratory Test: Digital Instrumentation for Monitoring and Control B-51

TEST 19 Laboratory Test: Power Sources for Mobile Subsurface Vehicles B-53

TEST 20 Laboratory Test: High Temperature Electronics B-55

TEST 21 Laboratory Test: Electronics for Elevated Radiation Environment B-57

TEST 22 Laboratory Test: Technology Integration B-59

TEST 23 Mockup: Transport Locomotive, with Remote Operations Control Station B-61

TEST 24 Mockup: Emplacement Gantry, with Remote Operations Control Station B-63

TEST 25 Mockup: Waste Package Loading/Unloading Mechanism with Remote Operations Control Station B-65

TEST 26 Waste Package Transporter Functions Mockup Test B-67

TEST 27 Gantry Transfer Functions Mockup Test B-69

TEST 28 Gantry Operations Mockup Test B-71

TEST 29 Cask/Dual Purpose Canister Cool-Down Laboratory Tests B-73

TEST 30 Dual Purpose Canister Underwater Opening Laboratory Tests B-77

TEST 31 Pool (Underwater) Basket Handling Laboratory Tests B-81

TEST 32 Disposal Container Helium and Nitrogen Inerting Laboratory Tests B-85

TEST 33 Optimizing Waste Handling Operations for ALARA Laboratory Tests B-89

TEST 34 Supercompaction of Low-Level Waste Laboratory Tests B-93

TEST 35 Systems Integration Test - Waste Emplacement System (SS17) B-95

TEST 36 System Integration Test - Assembly Transfer System (SU10) B-97

TEST 37 Systems Integration Test - Canister Transfer System (SU11) B-99

TEST 38 The Startup Test of the MGR B-101

APPENDIX B
TEST DESCRIPTIONS

Appendix B provides preliminary descriptions of startup and top level systems integration tests. Appendix B also captures ongoing and proposed development laboratory and mockup tests for waste package materials, waste package development, surface design and subsurface design. A preliminary list of proposed follow-on tests are also included.

Tests summarized/presented represent proposed or ongoing activities. For ongoing tests test conductor and location are identified. Where applicable, references are cited.

INTENTIONALLY LEFT BLANK

TEST 1 (TBD-278)

TITLE: Scientific Investigation: Drift Scale Test (In Situ Thermal Test)

RESPONSIBLE PROJECT OFFICE: DOE Total System Performance Team

TEST CONDUCTOR: M&O Site Evaluation Program Operations

SUPPORT: Lawrence Livermore, Sandia National Laboratory, Lawrence Berkeley National Laboratory, Los Alamos, United States Geological Survey, instrumentation and test equipment vendors, and M&O Waste Package Materials

TEST LOCATION: Underground Thermal Test Facility (engineered barrier system Alcove 5), national laboratories (modeling)

PURPOSE:

- Develop an improved understanding of the in situ coupled thermal-mechanical-hydrological-chemical processes anticipated in the rock mass surrounding the repository; characterize and baseline thermal-mechanical-hydrological-chemical effects of waste heat on rock mass
- Evaluate conceptual models that calculate the coupled thermal-mechanical-hydrological-chemical behavior such that realistic bounds can be developed for the anticipated near-field environment
- Characterize rock mass deformation modulus at ambient and elevated temperatures
- Evaluate interactions between the heated rock mass and ground support elements (rock bolts, mesh, and cast-in-place concrete)
- Evaluate thermal-hydrological-chemical effects of waste heat on waste package materials
- Survivability/reliability of some instruments is a major uncertainty
- This test will improve the current experience base with potential instrumentation types for the full scale Performance Confirmation Program

PERIOD OF PERFORMANCE:

- Test design and predictive analyses were conducted prior to startup, beginning in 1995
- Instrumentation and initial testing completed prior to heater turn-on 12/3/97
- Four year heating period between 12/3/97 and 2001

TEST 1 (TBD-278) (Continued)

- Four year cooling period between 2001 and 2005
- Continuous monitoring throughout heating and cooling
- Test results will be analyzed and used for characterization and modeling during monitoring and after test completion
- Final data report due 6/30/06

TEST DESCRIPTION:

- 5 m dia. x 48 m long drift
- Drift wall temp: 200°C
- Heated volume of rock: 200,000 m^3 total; 13,000 m^3 above 100°C
- Borehole instrumentation: approx 3500 sensors in 147 boreholes
- Borehole permeability testing, video logging, moisture content logging
- Borehole, floor, and canister heaters
- Heater control system
- Plate load test apparatus
- Corrosion testing of waste package materials coupons
- Automated data acquisition system: approximately 6000 channels
- Modeling of thermal, mechanical, hydrological, and chemical rock mass behavior to allow extrapolation of test results and to simulate rock mass behavior around repository

TEST INTERFACES:

- Repository design: drift spacing, waste package spacing, ground support design
- Engineered barrier system: waste package materials design, drift lining requirements, backfill requirements
- Performance confirmation final design: instrumentation and testing frequency and requirements

TEST CONSTRAINTS:

- Number of interim progress reports will be limited, but raw data will be available
- Scale effects on rock mass will need to be extrapolated from drift scale to repository scale
- Survivability/reliability of some instruments is a major uncertainty

TEST CONFIGURATION:

Test Articles: Rock mass surrounding underground drift, software for modeling thermal, mechanical, hydrological, and chemical conditions and behavior

Test Facilities: Test alcove (observation, connecting, and heated drifts) with electric heaters and borehole instrumentation; data control system

Requirement	Test Objective
Heater power: 200 to 300 kW, with variable control.	Allow gradual heating of rock mass. Allow evaluation of various thermal loads to evaluate rock mass conditions and behavior for license application.
Instrumentation types: air and rock mass temp, rock mass moisture content, relative humidity in drift and boreholes, air pressure in drift and boreholes, mass chemistry changes, rock mass displacement, video and IR cameras, visual inspection through bulkhead window.	Allow monitoring of required parameters to evaluate rock mass conditions and behavior for license application.
Test types: rock mass elastic modulus, rock mass permeability, rock mass thermal conductivity, core sample laboratory testing (mechanical, thermomechanical, hydrological, mineralogical), corrosion of waste package materials (coupons).	Provide characterization of ambient conditions, allowing data interpretation and analyses. Allow modeling of rock mass conditions and behavior around repository for license application.
Data Control System: automated, 6000 channels, fiber optic cable to surface.	Allow data collection from all channels at a frequency of one time per hour; minimize cost of data processing and analysis; accommodate instrumentation design; provide results on schedule for license application.
Modeling of thermal, mechanical, hydrological, and chemical processes.	Allow modeling of rock mass conditions and behavior around repository for license application.
Test location in middle nonlithophysal lithologic unit (Tptpmn), access from exploratory studies facility main drift.	Tested rock mass characteristics representative of repository host rock; no adverse effects on repository area.
Test facility layout (observation, connecting, and heated drifts).	Avoid interference with other exploratory studies facility operations; prevent interference between test components.

TEST 1 (TBD-278) (Continued)

COSTS:

- Support costs (construction, drilling, A/E) =$8 M
- Initial testing costs (procurement, design, installation, ambient characterization, baseline data =$11 M
- Operating cost =$5.9 M/yr

Total =$59 M

Note: Support and initial costs already incurred as of December 1997.

CONCLUSIONS AND RECOMMENDATIONS: [to be determined (TBD)]

TEST 2 (TBD-279)

TITLE: Scientific Investigation: Seismic Effects on Natural and Engineered Barriers

RESPONSIBLE PROJECT OFFICE: DOE Total System Performance Team

TEST CONDUCTOR: M&O Site Evaluation Program Operations

SUPPORT: United States Geological Survey, instrumentation and test equipment vendors, M&O Subsurface Design

TEST LOCATION: M&O Las Vegas, underground seismic monitoring alcove, surface seismic network, surface Borehole UE-25 UZ16 with geophone string, shallow surface borehole array

PURPOSE:

- Develop characterization of seismic effects on rock mass and engineered barrier components
- Develop seismic design inputs for surface and underground structures
- Develop relationship of ground motion attenuation vs depth
- Resolve NRC Key Technical Issue on Structural Deformation and Seismicity (NRC 1997):
  - According to NRC, continued testing and analyses are required to further evaluate effects of seismic and tectonic activity on rock mass discontinuities and their contribution to the overall waste isolation function of the natural and engineered barrier
  - According to NRC, the premature breach of containment by mechanical failure such as disruption by direct faulting or by seismically induced rockfall on waste packages need to be understood
  - According to NRC, structural deformation and seismicity as defined by the prevailing tectonic, lithostratic, pore fluid, and thermal stresses interacting within the fractured rocks at Yucca Mountain are important factors in evaluating repository design and performance because they can cause premature waste package failures and alter the flow regime
  - According to NRC, seismic motion needs to be considered in evaluation of the engineered and natural barrier systems because seismic motion could disrupt waste packages by inducing rockfall or fall of chunks of concrete liner; inducing faults to slip that are on the verge of slipping (thereby inducing secondary earthquakes); inducing fluctuations of the water table; and redistributing the local stress field, which may redirect flow

PERIOD OF PERFORMANCE:

- 1997-1998: NRC to investigate sensitivity of dose to seismic motion by using UDEC and SEISMO to simulate effects of ground accelerations within emplacement drifts
- 1998: Update earthquake catalog, complete probabilistic seismic hazard assessment, complete seismic design inputs, report on 1997 seismicity, prepare Topical Report 3
- 1999: Report on 1998 seismicity; finalize Topical Report 3; update seismic design inputs for license application; develop 3-D velocity model
- 2000: Install surface array of geophones in shallow boreholes, begin annual testing for changes in velocity; complete draft site characteristics chapter of license application
- Continuous surface and underground seismic monitoring to locate earthquakes and record ground acceleration from any large earthquakes that occur nearby
- Periodic calibration and maintenance

TEST DESCRIPTION:

NRC (1997) has determined that the seismotectonic activities that may significantly affect the future (10,000 to 100,000 years or more) performance of a repository can be adequately identified and assessed by existing methods, models, and codes.

Earthquake ground motion will be monitored by the following facilities:

- String of geophones in Borehole UE-25 UZ16 from 100 to 1700 ft depth
- Surface array of geophones in shallow boreholes
- Underground accelerometers at 1 or 2 alcoves
- Surface accelerometers at 27 stations
- Data acquisition systems

Local model of wave forms will be developed.

Modeling software for evaluation of rock mass conditions and behavior around repository will be developed.

Case histories of underground structures subjected to earthquakes and large blast vibrations can be used to demonstrate the small probability of significant displacements and earthquake induced damage.

TEST INTERFACES:

- Repository design: drift layout, ground support design, waste handling building structural design
- Engineered barrier system: waste package materials design, drift lining requirements, backfill requirements
- Performance confirmation design: utilize same facilities

TEST CONSTRAINTS:

Variability of rock mass and soil dynamic properties with distance and direction complicates modeling.

TEST CONFIGURATION:

Test Articles: Rock mass surrounding underground alcoves and surface boreholes.

Test Facilities: Test alcoves with ground motion instrumentation; network of 27 digital seismic stations; network of eight strong-motion accelerometers; surface Borehole UE-25 UZ16 with geophone string; shallow surface borehole array; data control systems.

Requirement	Test Objective
Tectonic and seismic affects on repository shall be addressed. [10 CFR 60, 10 CFR 960]	Resolve remaining NRC issues in Issue Resolution Status Report, 11/12/97 (NRC 1997). Develop seismic design criteria for surface and underground structures.
Instrumentation types: geophone arrays, accelerometers, seismographs [available technology].	Allow monitoring of reqd parameters to evaluate ground motion characteristics for license application.
Numerical modeling [planned subsurface design activity, MYPS].	Allow modeling of rock mass conditions and behavior around repository for license application; satisfy specific NRC concerns in Issue Resolution Status Report, 11/12/97 (NRC 1997).
Surface seismic monitoring network and boreholes [planned Site Program Office activity, MYPS].	Provide understanding of seismic source parameters, ground motion attenuation, site effects, and tectonics for license application.
Underground seismic monitoring alcove [planned Site Program Office activity, MYPS].	Confirm ground motion characteristics at repository depth.

TEST 2 (TBD-279) (Continued)

Requirement	Test Objective
NRC considers development of fault and fault displacement models to be important to resolution of the key technical issue on seismic effects on repository performance [NRC 1997].	Fault displacement hazard will be addressed as part of the Probabilistic Seismic Hazard Assessment.
NRC acceptance criteria [NRC 1997] include the following: - Approved QA and quality control procedures and standards - If used, expert elicitations conducted in accordance with NUREG-1563 - Investigation of all known faults within 100 km of site to ensure that all candidate Type 1 faults (high likelihood of movement during repository lifetime) have been identified - Adequate determination of maximum earthquake for each candidate Type 1 fault - Acceptable measurement of trace length for each candidate Type 1 fault - Adequate determination of peak ground motion for each candidate Type 1 fault - Adequate measurement of distance to site boundary for each Type 1 fault - Adequate determination of geologic age of last movement of each candidate Type 1 fault - Adequate determination of potential for future slip for each candidate Type 1 fault - Adequate determination of trace length for each Type 1 fault to be considered in a fault displacement hazard analysis.	These criteria will be addressed by site characterization activities to investigate local and regional faults and various seismic parameters and by the Probabilistic Seismic Hazard Assessment.

Multi-Year Planning System (MYPS)

COSTS:

- Support costs (construction, drilling, A/E) =$2 M
- Initial testing costs (design, procurement, installation) =$1 M
- Modeling and other analyses =$4 M
- Operating and maintenance cost: $1.5 M/yr x 5 yr =$7.5 M

Total =$15 M (not including costs to date as of FY 1998)

CONCLUSIONS AND RECOMMENDATIONS: Results of the probabilistic seismic hazard analysis and development of seismic design inputs, as described in Topical Report 3, should serve as a basis for resolving seismic issues with NRC.

TEST 3 (TBD-280)

TITLE: Scientific Investigation: Engineered Barrier System Component Testing

RESPONSIBLE PROJECT OFFICE: DOE Total System Performance Team

TEST CONDUCTOR: M&O Test Organization and M&O Site Evaluation Program Operations

SUPPORT: M&O Subsurface Design, outside testing vendors, instrumentation and test equipment vendors

TEST LOCATION: M&O Las Vegas, national laboratories, underground test alcove(s), outside subcontractor laboratories

PURPOSE:

- Predict performance of engineered barrier system components (concrete or steel lining, grout, invert materials, seals, and waste package materials; possibly backfill and drip shield)
- Evaluate effects of heat and water fluxes and water chemistry changes on physical and chemical properties of precast concrete lining and waste package materials
- Evaluate effects of microbial activity on engineered barrier system material integrity and radionuclide transport potential
- Develop criteria for materials selection, processing requirements, and mix design for concrete or steel lining, grout, invert materials, emplacement pedestals, seals, waste package materials, and possibly for backfill and drip shield
- Develop characterization of water chemistry before and after interaction with engineered barrier system components (concrete lining, grout, invert materials, emplacement pedestals, backfill) and other construction materials (steel ribs, lagging, and rail)
- Evaluate effects of backfill on the thermal-hydrological environment in emplacement drifts
- Develop characterization of seepage into emplacement drifts, including effects of growth and decline of the thermal pulse, in support of evaluation of the need for backfill
- Develop characterization of radionuclide transport through concrete lining and other engineered barrier system components
- Develop characterization of chemical reactions between water, rock, and waste package
- Develop characterization of mineralogical changes associated with waste heat and resultant effects on concrete or steel lining, grout, invert materials, emplacement pedestals, waste package materials, seals, and possibly backfill and drip shield

TEST 3 (TBD-280) (Continued)

PERIOD OF PERFORMANCE:

- 1997 - 1998: Radionuclide flux testing on concrete materials
- 1998: Complete abstraction of near field and altered zone models, focusing on characterization of degraded engineered barrier system materials and thermally induced changes of radionuclide transport properties of the rock mass. Complete initial laboratory experiments for evaluation of geochemical reactions in fractured rock and waste package materials as a function of temperature, confining pressure, and time. Complete initial laboratory experiments for evaluation of backfill effects on thermal-hydrological and chemical conditions in emplacement drifts
- 1999: Complete preliminary evaluation of chemical, thermomechanical, and loading conditions on ground support systems
- 2000-2001: Develop model for evaluation of chemical effects and interactions between engineered barrier system materials, rock mass, and groundwater in the near field environment
- 2002-2008(?): Design and conduct laboratory and/or in situ tests; perform model based analyses

TEST DESCRIPTION:

- Concrete degradation testing in laboratory and in situ
- Waste package materials testing in laboratory and in situ, including at the drift scale test
- Ramp/shaft and borehole seal components testing in laboratory
- Possible backfill thermal testing in laboratory
- Possible drip shield testing in laboratory
- Instrumentation and data acquisition systems for in situ testing
- Modeling software for evaluation of transport characteristics of engineered barrier materials
- Modeling software for evaluation of groundwater and engineered barrier conditions and interactions, including microbial activity, will be developed (TBD)
- Cast-in-place concrete lining instrumentation and monitoring at sustained elevated temperatures and during heating/cooling cycles at the drift scale test (separate scope sheet)

TEST 3 (TBD-280) (Continued)

TEST INTERFACES:

- Repository design: waste package spacing, pedestal design and materials selection, ground support design
- Waste package design: waste package materials selection
- Performance confirmation design: instrumentation and testing frequency and requirements
- Related testing: waste package materials testing (separate scope sheets), in situ seals testing for ramps/shafts and boreholes, backfill constructability test, glassified waste form testing

TEST CONSTRAINTS:

- Results of laboratory testing need to be extrapolated to drift scale
- In situ and laboratory tests involve relatively short durations; need to be extrapolated and combined with modeling to simulate repository performance period

TEST CONFIGURATION:

Test Articles: Prototype engineered barrier components (drift lining, invert, backfill, seals, and waste package materials) and surrounding rock mass.

Test Facilities: Existing laboratory test setup at Lawrence Livermore National Laboratory; existing thermal test facility (concrete lined section, waste package materials coupons) future test alcove, instrumentation, and data control systems; possible seals component testing at Sandia National Laboratories, outside subcontractor laboratories.

Requirement	Test Objective
Geochemical and thermomechanical conditions in groundwater, rock mass, and waste packages must be addressed. [10 CFR 960]	Develop models of near field environment conditions and behavior in emplacement drifts for license application; characterize seepage into emplacement drifts.
Engineered barrier system component testing at underground test alcove and/or in a laboratory physical model [engineering judgement].	Perform long-term testing and evaluation of rock mass, groundwater, and engineered barrier system conditions and behavior for license application; tested rock mass and groundwater characteristics representative of repository host rock; verify near field models.
Evaluate the need for backfill in final repository design.	Develop models and conduct testing to support or eliminate backfill as a design feature.
The engineered barrier system limits effects of emplacement drift environment on the natural barrier.	Develop models and conduct testing to support or eliminate various engineered barrier system design and materials requirements.

TEST 3 (TBD-280) (Continued)

Requirement	Test Objective
The engineered barrier system minimizes movement of radionuclides to the natural barrier upon breach of waste packages.	Develop models and conduct testing to support or eliminate various engineered barrier system design and materials requirements.
The engineered barrier system limits microbial activity to protect the material integrity of the waste package.	Develop models and conduct testing to support or eliminate various engineered barrier system design and materials requirements.
The engineered barrier system accommodates waste retrieval operations prior to permanent closure.	Develop models and conduct testing to support or eliminate various engineered barrier system design and materials requirements.
The subsystems which contact the waste packages shall use materials which do not degrade the performance of the waste packages due to corrosion.	Develop models and conduct testing to support or eliminate various engineered barrier system design and materials requirements.
The engineered barrier system design shall use noncombustible and heat resistant materials. [10 CFR 60]	Develop models and conduct testing to support various engineered barrier system design and materials requirements.
The engineered barrier system shall limit the emplacement drift wall temperature to less than 200°C.	Develop models and conduct testing to support various engineered barrier system design and materials requirements.
The engineered barrier system shall be designed to operate in anticipated environmental conditions for emplacement drifts, including ranges of humidity, groundwater infiltration/seepage, groundwater pH, microbial species, air and rock surface temperature, and rate of temperature change.	Develop models and conduct testing to support various engineered barrier system design and materials requirements.
Schedule requirements. [10 CFR 60.142] During early developmental stage of construction implement a program for in situ testing of seals, backfill and thermal interaction effects of waste packages, backfill, rock and groundwater. Testing shall be initialized as early as possible: - Backfill testing before permanent closure - Seals test before full-scale sealing operation.	Provide a test schedule that matches requirements.

COSTS: TBD

CONCLUSIONS AND RECOMMENDATIONS:

- Develop integrated testing program for all engineered barrier system components
- Evaluate costs and feasibility/practicality/constructability of in situ and laboratory testing at approximately quarter to half scale

TEST 4 (TBD-281)

TITLE: High Level Waste Glass Alteration and High Level Waste Performance Under Unsaturated Conditions Laboratory Tests

RESPONSIBLE PROJECT OFFICE: DOE Test Organization

TEST CONDUCTOR: M&O Waste Package Organization

SUPPORT: National laboratories

TEST LOCATION: National laboratories

PURPOSE: Perform drip condition testing using spent fuel to provide dissolution and release rate responses for film flow and dripping water conditions. Determine the effects spent fuel on cladding and crushed spent fuel on a thin film have on cladding integrity, bounding alteration, and release rate data. Determine the interaction effects of unsaturated drip solutions with rock fill, crushed tuff, concrete, and corroded metal products on potential waste package materials and emplacement pedestals.

PERIODS OF PERFORMANCE:

1. Integrated testing and colloid studies - 10/1997 to 2/2002
2. Glass degradation studies - actinide-doped DWPF glass drip test - 1985 to 2/2002
3. Glass degradation studies - actinide-doped WVDP glass drip test - 1986 to 2/2002

TEST DESCRIPTIONS: Perform studies on colloids formed from the corrosion of spent fuel and glass samples. A series of 14 tests are performed using different flow rates and glass surface areas.

TEST INTERFACES: Engineered barrier system component testing (see Test 3)

TEST CONSTRAINTS: Extrapolation of test results to thousands of years.

TEST CONFIGURATION:

Test Article: Range of SNFs samples that represent the types of fuels to be stored in the waste package and glass samples.

Test Facilities:

- TBD for integrated testing and colloid studies
- TBD for glass degradation testing

TEST 4 (TBD-281) (Continued)

Requirement	Test Objective
The glass shall withstand the waste package environment.	Verify that the high-level waste glass container will not degrade within the waste package.
The glass shall withstand loading, transportation, emplacement and retrieval.	Verify that the high-level waste glass container has the required strength to withstand loading, transportation, emplacement and retrieval activities without failing.
The waste packages shall be designed so that neither its in situ chemical, physical and nuclear properties, nor its interactions with waste form and the emplacement environment, compromise the function of the waste package or the performance of the natural barriers or engineered barriers. [10 CFR 60.135 (a)(1)]	Determine the effects of the interactions between leachates and potential waste package component materials (e.g. corroded steel or potential backfill).
The glass provides physical and chemical stability of the waste form.	Verify that the high-level waste glass container does not alter the physical and chemical stability of the waste form.
The glass minimizes the mobilization of radionuclides.	Verify that the high-level waste glass container minimizes the mobilization of radionuclides.
The glass provides heat transfer to the waste container.	Verify that the high-level waste glass container allows for waste form heat transfer to the waste container. Determine reaction rate of DWPR type glasses with water vapor as a function of temperature.
The glass controls the oxidation rate of the waste form.	Verify that the high-level waste glass container controls the oxidation rate of the waste form. Determine the hydration rate of glass as a function of composition and temperature.
The waste package shall not contain explosive or pyrophoric materials or chemically reactive materials in an amount that could compromise the ability of the underground facility to contribute to waste isolation or the ability of the geologic repository to satisfy the performance objectives. [10 CFR 60.135(a)(2)]	Verify that the high-level waste glass container is free of explosive or pyrophoric materials or chemically reactive materials in a compromising amount.

COSTS: $1,425,000 (FY 1998 only) (TBD)

CONCLUSIONS AND RECOMMENDATIONS: TBD

TEST 5 (TBD-282)

TITLE: Spent Nuclear Fuel Oxidation Response Laboratory Tests

RESPONSIBLE PROJECT OFFICE: DOE Test Organization

TEST CONDUCTOR: M&O Waste Package Organization

SUPPORT: National laboratories

TEST LOCATION: National laboratories

PURPOSE: Determine the effects of spent nuclear fuel (SNF) oxidation on the waste package.

PERIOD OF PERFORMANCE: FY 1998

TEST DESCRIPTION: Conduct high temperature test to bound the range of transition kinetics.

- Conduct ten steady state regime flow through dissolution tests
- Conduct thermogravimetric analysis and flow-through tests on radioactive specimens in hot cells

TEST INTERFACES:

- Long-term engineered barrier system materials performance
- Humid air corrosion (see Test 8)
- Performance confirmation design
- Engineered barrier system design, including emplacement pedestals
- Engineered barrier system component testing (see Test 3)

TEST CONSTRAINTS: Extrapolation of data for the entire period of performance.

TEST CONFIGURATION:

Test Article: SNF samples
Test Facilities: TBD

TEST 5 (TBD-282) (Continued)

Requirement	Test Objective
The SNF container shall withstand the waste package environment.	Conduct high temperature tests on the SNF in waste packages, pretest isotropic characterization for burn up, and post test electro-optical analysis for phase determination.
The waste packages shall be designed so that neither its in situ chemical, physical and nuclear properties, nor its interactions with waste form and the emplacement environment, compromise the function of the waste package or the performance of the natural barriers or engineered barriers. [10 CFR 60.135(a)(1)] The SNF container provides physical and chemical stability of the waste form.	Verify that the SNF container does not alter the physical and chemical stability of the waste form. Conduct flow through dissolution tests on the approved testing material radioactive specimens with chemical and mechanical stresses applied in a controlled atmosphere. Conduct static leach tests of the SNF container assembly in J-13 well water. Conduct ten steady state regime flow through dissolution tests. Conduct thermogravimetric analysis and flow through tests on radioactive specimens in hot cells. Conduct low temperature dry bath oxidation tests.
The SNF container minimizes the mobilization of radionuclides.	Verify that the SNF container minimizes the mobilization of radionuclides.
The SNF container provides heat transfer to the waste container.	Verify that the SNF container allows for waste form heat transfer to the waste container.
The SNF container controls the oxidation rate of the waste form.	Verify that the SNF container controls the oxidation rate of the waste form. Determine the hydration rate of SNF as a function of composition and temperature.

COSTS: $350,000 (FY 1998) (TBD)

CONCLUSIONS AND RECOMMENDATIONS: TBD

TEST 6 (TBD-283)

TITLE: Spent Nuclear Fuel Performance Under Flow-through and Saturated Conditions Laboratory Tests

RESPONSIBLE PROJECT OFFICE: DOE Test Organization

TEST CONDUCTOR: M&O Waste Package Organization

SUPPORT: National laboratories

TEST LOCATION: National laboratories

PURPOSE: Verify that the SNF container has the required strength to withstand loading, transportation, emplacement, and retrieval without failing.

PERIOD OF PERFORMANCE: 10/1997 to 1/2002

TEST DESCRIPTION: Conduct thermogravimetric analysis and flow through tests on radioactive specimens in hot cells to determine the time delay plateau and temperature dependent kinetics of uranium oxides to the higher oxides.

TEST INTERFACES:

- Engineered barrier system design
- Performance confirmation
- Engineered barrier system component testing
- Long-term barrier materials performance test (see Test 7)

TEST CONSTRAINTS: Extrapolation of data for the entire period of performance.

TEST CONFIGURATION:

Test Article: SNF samples
Test Facilities: TBD

TEST 6 (TBD-283) (Continued)

Requirement	Test Objective
The SNF container shall withstand loading, transportation, emplacement and retrieval. [10 CFR 60.135(a)(3)]	Verify that the SNF container has the required strength to withstand loading, transportation, emplacement and retrieval activities without failing.
The waste packages shall be designed so that neither its in situ chemical, physical and nuclear properties, nor its interactions with waste form and the emplacement environment, compromise the function of the waste package or the performance of the natural barriers or engineered barriers. [10 CFR 60.135(a)(1)] The SNF container shall withstand the waste package environment.	Determine the effects of the interactions between leachates and potential waste package component materials (e.g. corroded steel, potential backfill or filler). Conduct flow through dissolution tests on the approved testing material radioactive specimens with chemical and mechanical stresses applied in a controlled atmosphere.
The SNF container provides physical and chemical stability of the waste form.	Verify that the SNF container does not alter the physical and chemical stability of the waste form. Conduct flow through dissolution tests on the approved testing material radioactive specimens with chemical and mechanical stresses applied in a controlled atmosphere. Conduct static leach tests of the SNF container assembly in J-13 well water.
The SNF container minimizes the mobilization of radionuclides.	Verify that the SNF container minimizes the mobilization of radionuclides. Conduct flow through dissolution tests.
The SNF container provides heat transfer to the waste container.	Verify that the SNF container allows for waste form heat transfer to the waste container. Determine reaction rate of DWPR type SNF container with water vapor as a function of temperature.
The SNF container controls the oxidation rate of the waste form.	Verify that the SNF container controls the oxidation rate of the waste form. Determine the hydration rate of SNF as a function of composition and temperature.

COSTS:

MYPS 12247030M4 = $963,000 (FY 1998)
MYPS 12247030M5 = $177,000 (FY 1998)

CONCLUSIONS AND RECOMMENDATIONS: TBD

TEST 7 (TBD-284)

TITLE: Laboratory Tests: Long-Term Barrier Materials Performance, Metal Barrier Long-Term Corrosion Testing, Microbiologically Influenced Corrosion, and Selected Corrosion Testing Studies

RESPONSIBLE PROJECT OFFICE: DOE Test Organization

TEST CONDUCTOR: M&O Waste Package Operations

SUPPORT: National laboratories

TEST LOCATION: National laboratories

PURPOSE: Determine the long-term effects of long-term corrosion and microbiologically influenced corrosion on barrier material performance.

PERIOD OF PERFORMANCE: FY 1998 to 12/2001 (FY 1998 Planning Schedule Rev 47, 10/10/97)

TEST DESCRIPTION:

- Long-term galvanic specimen testing (coupled metals and single metal) - In order to obtain kinetic and mechanistic data on barrier performance, test specimens from planned exposure limits will be exposed to a number of aqueous solutions at two temperatures
- Electrochemically measure corrosion rates of corrosion resistant waste package candidate materials with and without exposure to Yucca Mountain bacterial isolates
- Determine thermal stability of the waste package by performing aging studies under appropriate thermal, strain, and environmental conditions
- Develop micro-analytical systems to monitor chemical changes in the barrier system
- Test galvanic specimens of monel 400 and CRM couples

TEST INTERFACES:

- Performance confirmation testing
- Engineered barrier system component testing
- Engineered barrier system design, including emplacement pedestals

TEST CONSTRAINTS: Accurate extrapolation of data for the entire period of performance.

TEST CONFIGURATION:

Test Article: Coupled samples of the inner and outer barrier materials and single metal samples.
Test Facilities: TBD

Requirement	Test Objective
The design of the disposal container shall include but not be limited to consideration of the following factors: solubility, oxidation/reduction reactions, corrosion, hydrating, gas generation, thermal effects, mechanical strength, mechanical stress, radiolysis, radiation damage, radionuclide retardation, leaching, fire and explosion hazards, thermal loads, and synergistic interactions. [10 CFR 60.135(a)(2)] The waste package provides long-term chemical stability under adverse conditions and isolates the waste from the natural barrier. The waste package monitoring program shall include laboratory experiments which focus on the internal condition of the waste packages. To the extent practical, the environment experienced by the emplaced waste packages within the underground facility during the waste package monitoring program shall be duplicated in the laboratory experiments. [10 CFR 60.143 (c)]	Expose coupled inner and outer barrier samples to three aqueous solutions (dilute ionic content, concentrated ionic content, and cement modified) at two different temperatures (60°C and 90°C). Determine the interaction between the inner and outer barriers by measuring the changes in the corrosion allowance and corrosion resistance materials. Measure corrosion rates of corrosion resistant waste package candidate materials. Determine the types of bacteria that are present during the test. Perform aging tests on candidate alloy coupons under appropriate thermal, stress, and environmental conditions. Develop micro-analytical systems for measuring chemical changes occurring in small regions of the waste package, chemical profiling of crevices, pits and cracks. Determine long-term stability of the candidate alloy coupon samples and examine the candidate alloy coupon samples for brittleness characteristics. Expose the outer barrier to gamma radiation. Determine the effect of radiolysis corrosion on the outer barrier.

TEST 7 (TBD-284) (Continued)

Requirement	Test Objective
The waste package limits for corrosion and microbial activity to protect the waste package material integrity. The waste package monitoring program shall include laboratory experiments which focus on the internal condition of the waste packages. To the extent practical, the environment experienced by the emplaced waste packages within the underground facility during the waste package monitoring program shall be duplicated in the laboratory experiments. [10 CFR 60.143 (c)]	Expose single candidate samples of metal materials to credible aqueous environments and the saturated environment above these solutions for a period of five years. Five credible aqueous environments include: dilute ionic content, concentrated ionic content, a mildly acidified high ionic content, acidified high ionic content and cement modified to temperatures of 60°C and 900°C. Inoculate candidate alloy coupons with Yucca Mountain bacteria and expose them to the large scale drift test. Measure general corrosion, pitting corrosion, crevice corrosion, intergranular corrosion, stress corrosion cracking, and hydrogen embrittlement. Identify evidence of microbial growth and the potential effects on corrosion. Measure corrosion rates of corrosion resistant waste package candidate materials. Determine the types of bacteria that are present during the test. Perform continual flow microcosm experiments using modified J13 water supplied to crushed Yucca Mountain tuff and candidate metal coupons. Assess corrosion effects under simulated repository conditions.

COSTS:

10/1997 to 2/2002 = $10,700,000 (FY 1998 Planning Schedule Rev 47, 10/10/97)
MYPS 12257040M2 = $1,052,000 (FY 1998)
MYPS 12257040M5 = $125,000 (FY 1998)
MYPS 12257040M8 = $267,000 (FY 1998)
MYPS 12257040M9 = $65,000 (FY 1998)

CONCLUSIONS AND RECOMMENDATIONS: TBD

INTENTIONALLY LEFT BLANK

TEST 8 (TBD-285)

TITLE: Humid Air Corrosion Laboratory Tests

RESPONSIBLE PROJECT OFFICE: DOE Test Organization

TEST CONDUCTOR: M&O Waste Package Organization

SUPPORT: National laboratories

TEST LOCATION: National laboratories

PURPOSE: Determine the long range effects of corrosion from humid air conditions and the optimal humidity conditions for the repository.

PERIOD OF PERFORMANCE: FY 1998 to 3/2001 (FY Planning Schedule Rev 47, 10/10/97)

TEST DESCRIPTION: Conduct controlled humidity tests and electrolyte drip tests on heated tube specimens. Conduct thermogravimetric analysis. Conduct exposure of test specimens as part of various field tests at the exploratory studies facility.

TEST INTERFACES:

- Engineered barrier system design
- Engineered barrier system component testing
- Performance confirmation design

TEST CONSTRAINTS: Accurate extrapolation of data for the entire period of performance.

TEST CONFIGURATION:

Test Article: Coupled samples of the inner and outer barrier materials and single metal samples.
Test Facilities: TBD

TEST 8 (TBD-285) (Continued)

Requirement	Test Objective
The design of the disposal container shall include but not be limited to consideration of the following factors: solubility, oxidation/reduction reactions, corrosion, hydrating, gas generation, thermal effects, mechanical strength, mechanical stress, radiolysis, radiation damage, radionuclide retardation, leaching, fire and explosion hazards, thermal loads, and synergistic interactions. [10 CFR 60.135(a)(2)] The disposal container withstands the emplacement drifts external environments. The disposal container shall meet all performance requirements during and after exposure to the emplacement drift external environments identified in Table. The waste package monitoring program shall include laboratory experiments which focus on the internal condition of the waste packages. To the extent practical, the environment experienced by the emplaced waste packages within the underground facility during the waste package monitoring program shall be duplicated in the laboratory experiments. [10 CFR 60.143 (c)]	Expose single candidate samples of metal materials to credible aqueous environments and the saturated environment above these solutions for a period of five years. Five credible aqueous environments include: dilute ionic content, concentrated ionic content, a mildly acidified high ionic content, acidified high ionic content and cement modified to temperatures of 60°C and 90°C. Inoculate candidate alloy coupons with Yucca Mountain bacteria and expose them to the large scale drift test. Measure general corrosion, pitting corrosion, crevice corrosion, intergranular corrosion, stress corrosion cracking, and hydrogen embrittlement. Identify evidence of microbial growth and the potential effects on corrosion. Measure corrosion rates of corrosion resistant waste package candidate materials. Determine the types of bacteria that are present during the test. Perform continual flow microcosm experiments using modified J13 water supplied to crushed Yucca Mountain tuff and candidate metal coupons. Assess corrosion effects under simulated repository conditions.
Ibid.	Characterize the parameters responsible for enhanced corrosion and determine the critical humid conditions which enhance corrosion.
Ibid.	Characterize and measure deposits of salts and scales on the waste package surface and determine their effects on corrosion.
Ibid.	Characterize and measure corrosion under actual conditions within the Yucca Mountain repository.
Ibid.	Characterize and measure corrosion under actual conditions within the Yucca Mountain repository.

TEST 8 (TBD-285) (Continued)

Requirement	Test Objective
Ibid.	Conduct thermogravimetric analysis on intermediate corrosion and corrosion resistant candidate metal samples in environmental chambers with 90% to 100% humidity. Expose coupled inner and outer barrier samples to three aqueous solutions (dilute ionic content, concentrated ionic content, and cement modified) at two different temperatures (60°C and 90°C). Determine the interaction between the inner and outer barriers by measuring the changes in the corrosion allowance and corrosion resistance materials. Measure corrosion rates of corrosion resistant waste package candidate materials. Determine the types of bacteria that are present during the test. Perform aging tests on candidate alloy coupons under appropriate thermal, stress, and environmental conditions. Develop micro-analytical systems for measuring chemical changes occurring in small regions of the waste package, chemical profiling of crevices, pits and cracks. Determine long-term stability of the candidate alloy coupon samples. Examine the candidate alloy coupon samples for brittleness characteristics.

COSTS: $980,000 (FY 1998)
FY 1998 to 3/2001 = $2,197,000 (FY 1998 Planning Schedule Rev 47, 10/10/97)

CONCLUSIONS AND RECOMMENDATIONS: TBD

INTENTIONALLY LEFT BLANK

TEST 9 (TBD-286)

TITLE: Electrochemical and Stress-Corrosion Cracking Performance Laboratory Tests

RESPONSIBLE PROJECT OFFICE: DOE Test Organization

TEST CONDUCTOR: M&O Waste Package Organization

SUPPORT: Lawrence Livermore National Laboratory

TEST LOCATION: Lawrence Livermore National Laboratory

PURPOSE: Identify conditions leading to localized corrosion (pitting, crevice corrosion, stress corrosion, cracking and hydrogen embrittlement initiation) and film breakdown on candidate materials.

PERIOD OF PERFORMANCE: FY 1998 to FY 2002 (FY 1998 Planning Schedule Rev 47, 10/10/97)

TEST DESCRIPTION:

Electrochemical:

- Electrochemical basis for galvanic effects - measure electrochemical potential on corrosion
- Resistant and corrosion allowance materials which are coupled to measure galvanic corrosion
- Long-term electrochemical potential tests - polarize specimens above and below electrochemical potentials to determine film breakdown
- Critical potential measurements - Test all classes of candidate materials under a range of temperature and pH conditions above and below critical electrochemical potentials

Stress-Corrosion Cracking:

- Self-loaded stress corrosion crack growth tests: Expose specimens to a range of pH and electrolyte concentrations at varying temperatures
- Measure environmentally assisted cracking: Expose specimens to self loaded double cantilevered conditions at varying temperatures to measure the intensity for crack growth
- Conduct self-loaded stress on double cantilevered beam specimens
- Expose candidate materials that are under a self-loaded double cantilevered condition to various corrosive aqueous solutions

TEST INTERFACES:

- Humid air corrosion test
- Long-term barrier materials performance
- SNF oxidation response
- SNF performance under flow-through and saturated conditions
- Engineered barrier system component testing
- Performance confirmation design

TEST CONSTRAINTS: TBD

TEST CONFIGURATION:

Test Article: Coupled samples of the inner and outer barrier materials and single metal samples.
Test Facilities: TBD

Requirement	Test Objective
The design of the disposal container shall include but not be limited to consideration of the following factors: solubility, oxidation/reduction reactions, corrosion, hydrating, gas generation, thermal effects, mechanical strength, mechanical stress, radiolysis, radiation damage, radionuclide retardation, leaching, fire and explosion hazards, thermal loads, and synergistic interactions. [10 CFR 60.135(a)(2)] The disposal container withstands the emplacement drifts environment. The disposal container shall meet all performance requirements during and after exposure to the emplacement drift environments.	TBD

COSTS: $548,000 (FY 1998)

FY 1998 to 3/2002 = $1,252,000 (FY Planning Schedule Rev 47, 10/10/97)

CONCLUSIONS AND RECOMMENDATIONS: TBD

TEST 10 (TBD-287)

TITLE: Basket Materials Performance Test Laboratory Tests

RESPONSIBLE PROJECT OFFICE: DOE Test Organization

TEST CONDUCTOR: M&O Waste Package Organization

SUPPORT: National laboratories

TEST LOCATION: National laboratories

PURPOSE: Evaluate the long-term degradation of basket materials.

PERIOD OF PERFORMANCE: FY 1998 to 5/2000 (FY Planning Schedule Rev 47, 10/10/97)

TEST DESCRIPTION: (TBD)

- Measure galvanic currents and potentials between candidate basket materials and inner barrier candidate materials.
  - Expose candidate basket materials to pH, various temperatures, and electrolyte composition
  - Perform electrochemical testing on candidate basket materials under varying pH, temperature, and electrolyte conditions
  - Simulate intense radiolysis on aqueous solutions and candidate basket materials under varying pH, temperature, and electrolyte conditions

TEST INTERFACES: (TBD)

TEST CONSTRAINTS: Accurate extrapolation of data for the entire period of performance.

TEST CONFIGURATION:

Test Article: Assemblies of candidate basket materials.
Test Facilities: TBD

TEST 10 (TBD-287) (Continued)

Requirement	Test Objective
The design of the disposal container shall include but not be limited to consideration of the following factors: solubility, oxidation/reduction reactions, corrosion, hydrating, gas generation, thermal effects, mechanical strength, mechanical stress, radiolysis, radiation damage, radionuclide retardation, leaching, fire and explosion hazards, thermal loads, and synergistic interactions. [10 CFR 60.135(a)(2)] The disposal container withstands the emplacement drifts environment. The disposal container shall meet all performance requirements during and after exposure to the emplacement drift environments.	TBD

COSTS: $250,000 (FY 1998)
FY 1998 to 5/2000 costs = $630,000 (FY Planning Schedule Rev 47, 10/10/97)

CONCLUSIONS AND RECOMMENDATIONS: TBD

TEST 11 (TBD-288)

TITLE: Waste Package Closure Methods Laboratory Tests

RESPONSIBLE PROJECT OFFICE: DOE Test Organization

TEST CONDUCTOR: M&O Waste Package Organization

SUPPORT: Framatome Technologies, Inc.

TEST LOCATION: Lynchburg, VA

PURPOSE: Series of tests were performed on the inner and outer lids to prove that the narrow groove gas tungsten arc weld process is feasible and successful.

PERIOD OF PERFORMANCE: FY 1997

TEST DESCRIPTION: These tests were performed on a mock up of a typical waste package whose diameter is full size and length is one quarter the planned length. Both the inner and outer lids are welded on to prove the welding process and to determine the feasibility of the weld groove configuration. Thermal conductivity tests are performed to determine the amount of heat conducted through the joined cylinders at points where full contact is achieved and not achieved by the shrink fit method of assembly. Residual and outer barrel stress measurements are taken on the inner and outer lids to determine the post-weld residual stresses.

The waste package materials were:

- Outer barrier cylinder and outer lid - ASTM A516 Grade 70 carbon steel plate
- Inner barrier cylinder and inner lid - ASTM B443 Alloy 625 plate

TEST INTERFACES:

- Engineered barrier system design
- Performance confirmation design

TEST CONSTRAINTS:

- Reliability of extrapolation of short term test results to long-term waste package performance
- The ability to project that no more than one percent of the waste containers will breach during the first 3,000 years (to be verified [TBV]) after placement
- Impracticality of testing 100 percent of the waste packages

TEST CONFIGURATION:

Test Article: Waste package without waste. The materials and scale of the mockup are described above.

Test Facilities: Framatome Technologies, Inc. Welding Facility, Lynchburg, VA

Requirement	Test Objective
The design of the disposal container shall include but not be limited to consideration of the following factors: solubility, oxidation/reduction reactions, corrosion, hydrating, gas generation, thermal effects, mechanical strength, mechanical stress, radiolysis, radiation damage, radionuclide retardation, leaching, fire and explosion hazards, thermal loads, and synergistic interactions. [10 CFR 60.135(a)(2)]	Verify that the welding process is feasible and in accordance with the intended design requirements.
The container inner and outer barrier lid welds shall be designed so that neither its in situ chemical, physical and nuclear properties, nor its interactions with waste form and the emplacement environment, compromise the function of the waste package or the performance of the natural barriers or engineered barriers.	Verify that the welding process is feasible and in accordance with the intended design requirements.
The processes specified for the fabrication, assembly, closure, and inspection of the waste packages shall be based on the technology reasonably available at the time of final design. These processes need not be reduced to commercial practice in all applicable details and shall not require significant extensions of technology.	Verify that the welding process is feasible and in accordance with the intended design requirements.
A loaded and sealed disposal container shall have the mechanical integrity to withstand a 2 m drop onto a flat, essentially unyielding surface without breaching (TBV). The disposal container shall have the mechanical integrity to sustain a static load of 1.25 times the maximum weight of the loaded and sealed disposal container applied at the handling points during loading of the waste form and the subsequent handling, transportation, emplacement, and retrieval of the disposal container. The design of the disposal container shall include but not be limited to consideration of the following factors: solubility, oxidation/reduction reactions, corrosion, hydrating, gas generation, thermal effects, mechanical strength, mechanical stress, radiolysis, radiation damage, radionuclide retardation, leaching, fire and explosion hazards, thermal loads, and synergistic interactions.	Verify that the welding process is feasible and in accordance with the intended design requirements.

COSTS: TBD

CONCLUSIONS AND RECOMMENDATIONS:

- The waste package lids and full penetration closure welds are designed to be thicker than the corresponding inner and outer barrier nominal wall thicknesses using a narrow groove gas tungsten arc welding process
- The shrink fit method of manufacturing was proven to be technically viable
- Post welding residual stress must be evaluated
- The narrow groove hot wire gas tungsten arc weld method proved to be successful in producing acceptable welds Further work is necessary to improve the remote capability of welding
- Additional prototypes will be made (in FY 1998) using different materials.

INTENTIONALLY LEFT BLANK

TEST 12 (TBD-289)

TITLE: Waste Package Nondestructive Examination Methods Laboratory Tests

RESPONSIBLE PROJECT OFFICE: DOE Test Organization

TEST CONDUCTOR: M&O Waste Package Organization

SUPPORT: Framatome Technologies, Inc.

TEST LOCATION: Lynchburg, VA

PURPOSE: To prove that the waste package closure welds can be successfully inspected by nondestructive examinations. Determine the amount of contact between the inner and outer barriers.

PERIOD OF PERFORMANCE: FY 1997

TEST DESCRIPTION: Ultrasonic testing is used to determine the quality of the waste package mockup closure welds and the gap between the inner and outer shrink fit cylinders after these components were assembled. Also, visual inspection, liquid penetrant examination and magnetic portide examination technologies are used.

This test was performed on a full scale mock up of a typical waste package whose diameter is full size and length is one quarter the planned length. The waste package materials were:

- Outer barrier cylinder and outer lid - ASTM A516 Grade 70 carbon steel plate
- Inner barrier cylinder and inner lid - ASTM B443 Alloy 625 plate

TEST INTERFACES:

Waste Package Nondestructive Examination Methods Report (CRWMS M&O 1997d)
Waste Package Closure Methods Report (CRWMS M&O 1997c)

TEST CONSTRAINTS:

- Reliability of extrapolation short term test results to long-term waste package performance
- The ability to project that no more than one percent of the waste containers will breach during the first 3,000 years (TBV) after placement
- The impracticality of testing 100 percent of waste packages

TEST CONFIGURATION:

Test Article: Waste package without waste. The materials and scale of the mockup are described above.

Test Facilities: Framatome Technologies, Inc., Lynchburg, VA

Requirement	Test Objective
The container inner and outer barrier lid welds shall be designed so that neither its in situ chemical, physical and nuclear properties, nor its interactions with waste form and the emplacement environment, compromise the function of the waste package or the performance of the natural barriers or engineered barriers. [10 CFR 60.135(a)(1)]	Verify that nondestructive examination methods cam be used to inspect the closure weld and are in accordance with the intended design requirements.
The processes specified for the fabrication, assembly, closure, and inspection of the waste packages shall be based on the technology reasonably available at the time of final design. These processes need not be reduced to commercial practice in all applicable details and shall not require significant extensions of technology.	Verify that nondestructive examination methods cam be used to inspect the closure weld and are in accordance with the intended design requirements.
The design of the disposal container shall include but not be limited to consideration of the following factors: solubility, oxidation/reduction reactions, corrosion, hydrating, gas generation, thermal effects, mechanical strength, mechanical stress, radiolysis, radiation damage, radionuclide retardation, leaching, fire and explosion hazards, thermal loads, and synergistic interactions.	Verify that nondestructive examination methods cam be used to inspect the closure weld and are in accordance with the intended design requirements.
A loaded and sealed disposal container shall have the mechanical integrity to withstand a 2 m drop onto a flat, essentially unyielding surface without breaching (TBV). The disposal container shall have the mechanical integrity to sustain a static load of 1.25 times the maximum weight of the loaded and sealed disposal container applied at the handling points during loading of the waste form and the subsequent handling, transportation, emplacement, and retrieval of the disposal container. The design of the disposal container shall include but not be limited to consideration of the following factors: solubility, oxidation/reduction reactions, corrosion, hydrating, gas generation, thermal effects, mechanical strength, mechanical stress, radiolysis, radiation damage, radionuclide retardation, leaching, fire and explosion hazards, thermal loads, and synergistic interactions.	Verify that nondestructive examination methods can be used to inspect the closure weld and are in accordance with the intended design requirements.

COSTS: $50,000

CONCLUSIONS AND RECOMMENDATIONS:

Recommendations:

- Develop a method for remote testing of the waste package closure welds
- Develop a method for remote testing of the gap between the inner and outer cylinders of the waste package
- Establish flaw criteria
- Perfect through wall weld defect characterization

Conclusions:

- It is possible to perform manual ultrasonic testing on the inner and outer barrier closure welds and obtain sufficient information to make a judgment on the quality of the welds through this nondestructive method of testing
- Ultrasonic testing is inconclusive for evaluating the amount of contact between the inner and outer cylinders

INTENTIONALLY LEFT BLANK

TEST 13 (TBD-290)

TITLE: Waste Package Fabrication Process Laboratory Tests

RESPONSIBLE PROJECT OFFICE: DOE Test Organization

TEST CONDUCTOR: M&O Waste Package Organization

SUPPORT: Framatome Technologies, Inc. and American Tank and Fabricating Co.

TEST LOCATION: Lynchburg, VA and Cleveland, OH

PURPOSE: To identify various methods of manufacturing that may be used to fabricate the waste container.

PERIOD OF PERFORMANCE: FY 1997

TEST DESCRIPTION: Verify the quality of the materials to be used to fabricate the waste disposal container. A series of tests are conducted to prove that the shrink fit method of fabrication is a viable fabrication method to join the inner and outer cylinders. Also, tests are conducted to determine how much contact is obtained between cylinders.

Perform a variety of tests on a variety of welds. Tests on welds include visual inspection, liquid penetrant examination, magnetic particle examination, ultrasonic examination, and radiographic examination. Welds that will join the components of the waste container components include shielded metal-arc, gas tungsten-arc (manual and auto) submerged arc, gas metal-arc (semi and auto), electro-slag.

TEST INTERFACES:

- Engineered barrier system component testing (See Test 3)
- Performance confirmation design

TEST CONSTRAINTS: TBD

TEST CONFIGURATION:

Test Article: Waste package assembly without the inner and outer closure lids
Test Facilities: Laboratory at Framatome Technologies, Inc., Lynchburg, VA

TEST 13 (TBD-290) (Continued)

Requirement	Test Objective
The processes specified for the fabrication, assembly, closure, and inspection of the waste packages shall be based on the technology reasonably available at the time of final design. These processes need not be reduced to commercial practice in all applicable details and shall not require significant extensions of technology.	Verify materials used for fabrication are in accordance with the intended design requirements.
The container inner and outer barrier lid welds shall be designed so that neither its in situ chemical, physical and nuclear properties, nor its interactions with waste form and the emplacement environment, compromise the function of the waste package or the performance of the natural barriers or engineered barriers. [10 CFR 60.135(a)(1)]	Verify materials used for fabrication are in accordance with the intended design requirements.
The design of the disposal container shall include but not be limited to consideration of the following factors: solubility, oxidation/reduction reactions, corrosion, hydrating, gas generation, thermal effects, mechanical strength, mechanical stress, radiolysis, radiation damage, radionuclide retardation, leaching, fire and explosion hazards, thermal loads, and synergistic interactions. [10 CFR 60.135(a)(2)]	Verify materials used for fabrication are in accordance with the intended design requirements.
A loaded and sealed disposal container shall have the mechanical integrity to withstand a 2 m drop onto a flat, essentially unyielding surface without breaching (TBV). The disposal container shall have the mechanical integrity to sustain a static load of 1.25 times the maximum weight of the loaded and sealed disposal container applied at the handling points during loading of the waste form and the subsequent handling, transportation, emplacement, and retrieval of the disposal container. The design of the disposal container shall include but not be limited to consideration of the following factors: solubility, oxidation/reduction reactions, corrosion, hydrating, gas generation, thermal effects, mechanical strength, mechanical stress, radiolysis, radiation damage, radionuclide retardation, leaching, fire and explosion hazards, thermal loads, and synergistic interactions.	Verify materials used for fabrication are in accordance with the intended design requirements.

COSTS: $420,000 (FY 1998)

CONCLUSIONS AND RECOMMENDATIONS:

The cylinder within a cylinder design is viable and the most economical and generally meets the requirements of the design.

The issue of galvanic corrosion must be resolved.

TEST 14 (TBD-291)

TITLE: Waste Package Operations Phase II Laboratory Tests

RESPONSIBLE PROJECT OFFICE: DOE Test Organization

TEST CONDUCTOR: M&O Waste Package Organization

SUPPORT: Framatome Technologies, Inc.

TEST LOCATION: Lynchburg, VA

PURPOSE: Demonstrate that a full cylinder mock up can be remotely welded using the automatic gas tungsten arc method without inducing undue stress or distortion, demonstrate that the weld can be remotely inspected, and evaluate the shrink fit method of fabrication.

PERIOD OF PERFORMANCE: FY 1998

TEST DESCRIPTION: This test will be performed on a full scale mock up of a typical waste package whose diameter is full size and length is one quarter the planned length. Perform mapping of the gap between the inner and outer barriers before welding the bottom end lids to the cylinders and after stress relief using a scanning ultrasonic testing technique.

Determine any diametrical changes of the inner cylinder as a result of the shrink fit and stress relief processes.

Determine if any differential temperature variations occur that may contribute to post shrink fit stress of the inner cylinder.

Dye penetrant testing will be performed on the inner lid for WPO-LV information. Magnetic particle testing will be performed on the outer lid for WPO-LV information.

TEST INTERFACES:

- Engineered barrier system design
- Performance confirmation design
- Waste package nondestructive examination methods
- Fabrication report closure methods testing
- *Waste Package Fabrication Process Report* (CRWMS M&O 1997e)

TEST CONSTRAINTS:

Ultrasonic scanning of 100 percent of the surface between the inner and outer cylinders may not be possible due to testing equipment configuration.

TEST CONFIGURATION:

Test Article: Waste package without waste. The materials and scale of the mockup are described above.

Test Facilities: Laboratory at Framatome Technologies, Inc., Lynchburg, VA

Requirement	Test Objective
A loaded and sealed disposal container shall have the mechanical integrity to withstand a 2 m drop onto a flat, essentially unyielding surface without breaching (TBV). The disposal container shall have the mechanical integrity to sustain a static load of 1.25 times the maximum weight of the loaded and sealed disposal container applied at the handling points during loading of the waste form and the subsequent handling, transportation, emplacement, and retrieval of the disposal container. The design of the disposal container shall include but not be limited to consideration of the following factors: solubility, oxidation/reduction reactions, corrosion, hydrating, gas generation, thermal effects, mechanical strength, mechanical stress, radiolysis, radiation damage, radionuclide retardation, leaching, fire and explosion hazards, thermal loads, and synergistic interactions. [10 CFR 60.135(a)(2)]	Verify that the closure welds can be made remotely and inspected remotely in accordance with the intended design requirements.
The container inner and outer barrier lid welds shall be designed so that neither its in situ chemical, physical and nuclear properties, nor its interactions with waste form and the emplacement environment, compromise the function of the waste package or the performance of the natural barriers or engineered barriers.	Verify that the closure welds can be made remotely and inspected remotely in accordance with the intended design requirements.
The processes specified for the fabrication, assembly, closure, and inspection of the waste packages shall be based on the technology reasonably available at the time of final design. These processes need not be reduced to commercial practice in all applicable details and shall not require significant extensions of technology.	Verify that the closure welds can be made remotely and inspected remotely in accordance with the intended design requirements.
The design of the disposal container shall include but not be limited to consideration of the following factors: solubility, oxidation/reduction reactions, corrosion, hydrating, gas generation, thermal effects, mechanical strength, mechanical stress, radiolysis, radiation damage, radionuclide retardation, leaching, fire and explosion hazards, thermal loads, and synergistic interactions.	Verify that the closure welds can be made remotely and inspected remotely in accordance with the intended design requirements.

COSTS: $800,000 (Includes development program and nondestructive examination for FY 1998)

CONCLUSIONS AND RECOMMENDATIONS: TBD

TEST 15 (TBD-292)

TITLE: Waste Package Quarter Scale and Modified Quarter Scale Mockup Tests

RESPONSIBLE PROJECT OFFICE: DOE Test Organization

TEST CONDUCTOR: M&O Waste Package Operations

SUPPORT: Vendor

TEST LOCATION: Vendor facility, prototype testbed

PURPOSE: Evaluate each waste package design for normal conditions of transport to include drop, compression and penetration events. As a result of anomalies determined by test and analysis, engineering changes will be implemented and retested.

PERIOD OF PERFORMANCE: FY 2003 to FY 2005

Note: Modified quarter scale tests need to be complete prior to construction authorization.

TEST DESCRIPTION: Fabricate and test a quarter scale waste package mockup for free drop, compression and penetration testing. As a result of tests implement necessary modifications through engineering changes and retest modified quarter scale mockup. Note: NRC nay require testing of full scale prototype.

TEST INTERFACES: NA

TEST CONSTRAINTS: NA

TEST CONFIGURATION:

Test Article:

- Quarter scale mockup
- Modified mockup

Test Facilities: Vendor and/or mockup facility

TEST 15 (TBD-292) (Continued)

Requirement	Test Objective
The disposal container (and closure welds) shall have the mechanical integrity to sustain a static load of 1.25 times the maximum weight of the loaded and sealed disposal container applied at the handling points during loading of the waste form and the subsequent handling, transportation, emplacement, and retrieval of the disposal container. [MGDS RD 3.1.C][10 CFR 60.135(b)(3)]	Verify that the waste package can withstand the effects of handling without breaching or compromising its integrity.
The inner and outer barrier lid welds shall maintain performance under rock induced loading (TBD).	Determine the loading which causes failure by analytical or testing methods.
A loaded and sealed disposal container shall have the mechanical integrity to withstand a 2 m drop onto a flat, essentially unyielding surface without breaching.	Verify that the waste package inner and outer barrier lid welds can withstand the effects of handling without breaching or compromising its integrity.
The waste package including the inner and outer barrier lid welds shall maintain mechanical strength and stress characteristics under its own weight.	Verify that the amount of sag that occurs over a (TBD) period of time will not cause a breach in the inner and outer barrier lid welds.
The internal structure of the disposal container shall provide separation of the waste forms such that nuclear criticality shall not be possible unless at least two unlikely, independent, and concurrent or sequential changes have occurred in the conditions essential to nuclear criticality safety. The system must be designed for criticality safety assuming occurrence of design basis events. The calculated effective multiplication factor (k_{eff}) must be sufficiently below unity to show at least a five percent margin after allowance for the bias in the method of calculation and the uncertainty in the experiments used to validate the method of calculation (TBD).	Verify that the waste package can withstand the effects of handling without breaching or compromising its integrity.

Mined Geologic Disposal Systems Requirements Document (MGDS RD) (YMP 1998)

COSTS: Vendor effort approximately $0.5M. This activity may result in modifications to existing waste package design documentation. Costs do not reflect development of new documentation needed to enhance product or cost of retest (modified quarter scale test) to verify anomaly resolution.

CONCLUSIONS AND RECOMMENDATIONS: (TBD)

TEST 16 (TBD-293)

TITLE: Laboratory Test: Subsurface Communication Technologies

RESPONSIBLE PROJECT OFFICE: DOE Design and Test Organizations

TEST CONDUCTOR: M&O Design and Test Organizations

SUPPORT: Independent research institution, such as a commercial company or university laboratory

TEST LOCATION: Vendor facility or test laboratory

PURPOSE: This test will evaluate and confirm the suitability, adequacy and availability of specific communication technologies for use in the anticipated subsurface nuclear waste repository environment.

PERIOD OF PERFORMANCE: The test plan will be developed in Q1 FY 1999. Testing to begin in Q2 of FY 1999 and carry over into Q4 of FY 2000. Test data analyzed and anomalies resolved before technology is selected for baseline design activities.

TEST DESCRIPTION: Several communication technologies and design issues need to be explored, understood and tested. For example, wireless subsurface mobile communications is an important element of the repository design concept. This activity will develop a test plan, objective and specification. Technology demonstrations will include: evaluation and testing of available direct RF equipment suitable for use in underground drifts, specifically investigating issues such as range of operations, coverage, multipath interference, bandwidth, reliability, and suitability of technology for use in elevated temperatures. As resources permit, evaluations may also include: design, fabrication, demonstration and evaluation of a high-temperature leaky feeder cable concept and slotted microwave technologies.

TEST INTERFACES:

- Waste emplacement system
- Performance confirmation system
- Waste retrieval system
- Backfill emplacement system
- Subsurface emplacement transportation system
- Subsurface safety and monitoring system
- Site communication system

TEST CONSTRAINTS:

- Approximately simulate confined spaces and physical characteristics of the subsurface environment

- Test over temperature ranges that approximate those anticipated within the subsurface environment

TEST CONFIGURATION:

Test Article: Wireless radio frequency and microwave communication equipment. Specific make and model to be determined during test plan development.

Test Facilities: Vendor/contractor supplied

REQUIREMENT/OBJECTIVE:

Requirement	Test Objective
An identification of those SSCs of the geologic repository, both surface and subsurface, which require research and development to confirm the adequacy of design. For SSCs important to safety and for the engineered and natural barriers important to waste isolation, DOE shall provide a detailed description of the programs designed to resolve safety questions, including a schedule indicating when these questions would be resolved. [10 CFR 60.21(c)(14)]	This test will confirm adequacy of specified technologies to meet design requirements. This test will identify if additional research and development is necessary before implementing particular SSC design concepts. Specified technologies apply to design of components important to safety. This test will confirm suitability and availability of technology for application to safety related systems and/or help to identify and resolve safety related questions.

COSTS:

Operational personnel and test conductors	=	$120K
Test consumables	=	$100K
Other	=	$ 80K
Total	=	**$300K**

CONCLUSIONS AND RECOMMENDATIONS: (TBD)

TEST 17 (TBD-294)

TITLE: Laboratory Test: Remote Vehicle Control Systems

RESPONSIBLE PROJECT OFFICE: DOE Design and Test Organizations

TEST CONDUCTOR: M&O Design and Test Organizations

SUPPORT: Independent research institution, such as a commercial company or university laboratory.

TEST LOCATION: Vendor facility or test laboratory

PURPOSE: This test will evaluate and confirm the suitability, adequacy and availability of specific remote vehicle control technologies for use in the anticipated subsurface nuclear waste repository environment.

PERIOD OF PERFORMANCE: The test plan will be developed in Q1 FY 1999. Testing to begin in Q2 of FY 1999 and carry over into Q4 of FY 2000. Test data analyzed and anomalies resolved before technology is selected for baseline design activities.

TEST DESCRIPTION: The remote vehicle controls systems that will be developed for use in the subsurface repository will need to be ultra-reliable while operating in demanding and hazardous environments. Remote vehicle controls are important elements of the repository design concept. Several design issues need to be explored, understood and tested. This activity will develop a test plan, objective and specification. Technology demonstrations will include: investigation of robust and reliable control architectures, implementation of redundant control processors, design and fabrication of laboratory models, and reliability testing in harsh environments.

TEST INTERFACES:

- Waste emplacement system
- Performance confirmation system
- Waste retrieval system
- Backfill emplacement system
- Subsurface emplacement transportation system
- Subsurface safety and monitoring system
- Site communication system

TEST CONSTRAINTS: Approximately simulate physical characteristics of the subsurface environment.

TEST CONFIGURATION:

Test Article: Specific make and model TBD during test plan development.

Test Facilities: Vendor/contractor supplied

Requirement	Test Objective
The system shall provide redundant methods for monitoring the position for all remote transport and emplacement operations. [10 CFR 60.131(b)(5)(ii)]	This test shall examine multiple technologies that can be implemented in a redundant manner.
No human entry is planned in the emplacement drifts while waste packages are present. The waste emplacement/retrieval equipment may use robotics and/or remote control features to perform operations and monitoring within the emplacement drifts. This assumption is Key 013 of the Controlled Design Assumption [CDA Key 013].	This test shall examine core technologies that, if confirmed suitable, will permit and enable the design of systems that can provide the means for remote monitoring and control.
The system shall be designed so that environmental conditions do not interfere with safety functions. [10 CFR 60.131 (b)(1) and (b)(8)]	The test shall examine the suitability and feasibility of applying the specific technologies within anticipated repository operating environments.

Controlled Design Assumptions Document (CDA) (CRWMS M&O 1998)

COSTS: Operational personnel and test conductors = $120K
Test consumables = $100K
Other = $ 80K

Total = $300K

CONCLUSIONS AND RECOMMENDATIONS: TBD

TEST 18 (TBD-295)

TITLE: Laboratory Test: Digital Instrumentation for Monitoring and Control

RESPONSIBLE PROJECT OFFICE: DOE Design and Test Organizations

TEST CONDUCTOR: M&O Design and Test Organizations

SUPPORT: Independent research institution, such as a commercial company or university laboratory

TEST LOCATION: Vendor facility or test laboratory

PURPOSE: This test will evaluate and confirm the suitability, adequacy and availability of specific digital instrumentation and monitoring and control technologies for use in the anticipated subsurface nuclear waste repository environment.

PERIOD OF PERFORMANCE: The test plan will be developed in Q1 FY 1999. Testing to begin in Q2 of FY 1999 and carry over into Q4 of FY 2000. Test data analyzed and anomalies resolved before technology is selected for baseline design activities.

TEST DESCRIPTION: Modern, microprocessor-based, instrumentation and control equipment, such as operator control stations, digital data acquisition systems, data processing, network and communications equipment, borehole instrumentation, air sampling instruments, IR cameras, and a host of others may be utilized in the subsurface repository. Having a detailed understanding of the reliability of these systems in harsh environments is important. A long history of successful field testing is helpful in understanding, estimating, and minimizing mean time between failures. This activity will develop a test plan, objective and specification. Testing will focus on technology demonstrations and key instrumentation and control components that may be used within the repository.

TEST INTERFACES:

- Waste emplacement system, performance confirmation system, waste retrieval system, backfill emplacement system, subsurface emplacement transportation system, subsurface safety and monitoring system, site communication system

- Borehole instrumentation, air-sampling instruments, infrared cameras are currently under investigation in the drift scale test (see Test 1)

TEST CONSTRAINTS: Approximately simulate confined spaces and physical characteristics of the subsurface environment.

TEST CONFIGURATION:

Test Article: Specific make and model TBD during test plan development.

Test Facilities: Vendor/contractor supplied

REQUIREMENT/OBJECTIVE:

Requirement	Test Objective
An identification of those SSCs of the geologic repository, both surface and subsurface, which require research and development to confirm the adequacy of design. For SSCs important to safety and for the engineered and natural barriers important to waste isolation, DOE shall provide a detailed description of the programs designed to resolve safety questions, including a schedule indicating when these questions would be resolved. [10 CFR 60.21(c)(14)]	This test will confirm adequacy of specified technologies to meet design requirements. This test will identify if additional research and development is necessary before implementing particular SSC design concepts. Specified technologies apply to design of components important to safety. This test will confirm suitability and availability of technology for application to safety related systems and/or help to identify and resolve safety related questions.

COSTS: Operational personnel and test conductors = $120K
Test consumables = $100K
Other = $ 80K

Total = $300K

CONCLUSIONS AND RECOMMENDATIONS: (TBD)

TEST 19 (TBD-296)

TITLE: Laboratory Test: Power Sources for Mobile Subsurface Vehicles

RESPONSIBLE PROJECT OFFICE: DOE Design and Test Organizations

TEST CONDUCTOR: M&O Design and Test Organizations

SUPPORT: Independent research institution, such as a commercial company or university laboratory

TEST LOCATION: Vendor facility or test laboratory

PURPOSE: This test will evaluate and confirm the suitability, adequacy and availability of specific power sources technologies for mobile subsurface vehicles to be used in the anticipated subsurface nuclear waste repository environment.

PERIOD OF PERFORMANCE: The test plan will be developed in Q4 FY 1999. Testing to begin in Q2 of FY 2000 and carry over into Q4 of FY 2001. Test data analyzed and anomalies resolved before technology is selected for baseline design activities.

TEST DESCRIPTION: Supplying power to mobile equipment and vehicles is an important element of the repository design concept. Multiple technologies are available and several design issues need to be explored, understood and tested. This activity will develop a test plan, objective and specification. Technology evaluations and demonstrations will include: an evaluation of using conductor bar technology at elevated temperatures, investigation of long-term maintenance issues and requirements, life-cycle testing, and investigation and recommendation of alternative backup power sources such as high-temp battery systems, fuel cells, or the feasibility of using diesel in off-normal situations.

TEST INTERFACES:

- Waste emplacement system
- Performance confirmation system
- Waste retrieval system
- Backfill emplacement system
- Subsurface emplacement transportation system
- Subsurface safety and monitoring system
- Site communication system

TEST CONSTRAINTS: Approximately simulate confined spaces and physical characteristics of the subsurface environment.

TEST CONFIGURATION:

Test Article: Specific make and model TBD during test plan development.

TEST 19 (TBD-296) (Continued)

Test Facilities: Vendor/contractor supplied

REQUIREMENT/OBJECTIVE:

Requirement	Test Objective
The system shall provide redundant methods for monitoring the position for all remote transport and emplacement operations. [10 CFR 60.131(b)(5)(ii)]	This test shall examine multiple technologies that can be implemented in a redundant manner.
No human entry is planned in the emplacement drifts while waste packages are present. The waste emplacement/retrieval equipment may use robotics and/or remote control features to perform operations and monitoring within the emplacement drifts. This assumption is Key 013 of the Controlled Design Assumption [CDA Key 013].	This test shall examine core technologies that, if confirmed suitable, will permit and enable the design of systems that can provide the means for remote monitoring and control.
The system shall be designed so that environmental conditions do not interfere with safety functions. [10 CFR 60.131 (b)(1) and (b)(8)]	The test shall examine the suitability and feasibility of applying the specific technologies within anticipated repository operating environments.

Controlled Design Assumptions Document (CDA) (CRWMS M&O 1998)

COSTS: Operational personnel and test conductors = $120K
Test consumables = $100K
Other = $ 80K

Total = $300K

CONCLUSIONS AND RECOMMENDATIONS: (TBD)

TEST 20 (TBD-297)

TITLE: Laboratory Test: High Temperature Electronics

RESPONSIBLE PROJECT OFFICE: DOE Design and Test Organizations

TEST CONDUCTOR: M&O Design and Test Organizations

SUPPORT: Independent research institution, such as a commercial company or university laboratory

TEST LOCATION: Vendor facility or test laboratory

PURPOSE: This test will evaluate and confirm the suitability, adequacy and availability of high temperature electronic technologies for use in the anticipated subsurface nuclear waste repository environment.

PERIOD OF PERFORMANCE: The test plan will be developed in Q1 FY 1999. Testing to begin in Q2 of FY 1999 and carry over into Q4 of FY 2000. Test data analyzed and anomalies resolved before technology is selected for baseline design activities.

TEST DESCRIPTION: New generations of commercially available high-temperature digital electronic components are being developed for use in the aerospace, automotive, chemical processing and oil and gas exploration industries. These new components and devices could be utilized in the design of remote systems used in the repository, particularly those used to monitor and inspect the 200°C emplacement drifts during performance confirmation. Several design issues related to these new components should be explored, understood and tested. This activity will develop a test plan, objective and specification. Technology evaluations and demonstrations will include: identification and testing of available heat-tolerant circuits and components typical of the control electronics and instrumentation that will be used in the repository. It may also include a preliminary evaluation and testing of several passive and active thermal control strategies.

TEST INTERFACES:

- Waste emplacement system
- Performance confirmation system
- Waste retrieval system
- Backfill emplacement system
- Subsurface emplacement transportation system
- Subsurface safety and monitoring system
- Site communication system
- Similar components and devices under investigation in the drift scale test (see Test 1)

TEST CONSTRAINTS: Approximately simulate confined spaces and physical characteristics of the subsurface environment.

TEST 20 (TBD-297) (Continued)

TEST CONFIGURATION:

Test Article: Specific make and model TBD during test plan development.

Test Facilities: Vendor/contractor supplied

REQUIREMENT/OBJECTIVE:

Requirement	Test Objective
An identification of those SSCs of the geologic repository, both surface and subsurface, which require research and development to confirm the adequacy of design. For SSCs important to safety and for the engineered and natural barriers important to waste isolation, DOE shall provide a detailed description of the programs designed to resolve safety questions, including a schedule indicating when these questions would be resolved. [10 CFR 60.21(c)(14)]	This test will confirm adequacy of specified technologies to meet design requirements. This test will identify if additional research and development is necessary before implementing particular SSC design concepts. Specified technologies apply to design of components important to safety. This test will confirm suitability and availability of technology for application to safety related systems and/or help to identify and resolve safety related questions.

COSTS: Operational personnel and test conductors = $120K
Test consumables = $100K
Other = $ 80K

Total = $300K

CONCLUSIONS AND RECOMMENDATIONS: (TBD)

TEST 21 (TBD-298)

TITLE: Laboratory Test: Electronics for Elevated Radiation Environment

RESPONSIBLE PROJECT OFFICE: DOE Design and Test Organizations

TEST CONDUCTOR: M&O Design and Test Organizations

SUPPORT: Independent research institution, such as a commercial company or university laboratory

TEST LOCATION: Vendor facility or test laboratory

PURPOSE: This test will evaluate and confirm the suitability, adequacy and availability of electronics technologies for elevated radiation environment anticipated within the subsurface nuclear waste repository environment.

PERIOD OF PERFORMANCE: The test plan will be developed in Q3 FY 1999. Testing to begin in Q4 of FY 1999 and carry over into Q4 of FY 2000. Test data analyzed and anomalies resolved before technology is selected for baseline design activities.

TEST DESCRIPTION: Remotely handling waste packages will expose equipment to elevated levels of radiation. Some electrical components can be susceptible to even relatively low levels of radiation. It is important to identify electronic components and devices that can tolerate this level of radiation, components that may be available in "rad-hard" packages, and components that will require high density shielding. This activity will develop a test plan, objective and specification. Technology evaluations and demonstrations will include: evaluation of current control system designs, identification of suitable radiation tolerant components, development and testing of shielding strategies for sensitive components, and reliability testing. It will be important to identify which components in the design may need special attention and design strategies.

TEST INTERFACES:

- Waste emplacement system
- Performance confirmation system
- Waste retrieval system
- Backfill emplacement system
- Subsurface emplacement transportation system
- Subsurface safety and monitoring system
- Site communication system

TEST CONSTRAINTS: Approximately simulate confined spaces and physical characteristics of the subsurface environment.

TEST CONFIGURATION:

Test Article: Specific make and model TBD during test plan development.

Test Facilities: Vendor/contractor supplied

Requirement	Test Objective
An identification of those SSCs of the geologic repository, both surface and subsurface, which require research and development to confirm the adequacy of design. For SSCs important to safety and for the engineered and natural barriers important to waste isolation, DOE shall provide a detailed description of the programs designed to resolve safety questions, including a schedule indicating when these questions would be resolved. [10 CFR 60.21(c)(14)]	This test will confirm adequacy of specified technologies to meet design requirements. This test will identify if additional research and development is necessary before implementing particular SSC design concepts. Specified technologies apply to design of components important to safety. This test will confirm suitability and availability of technology for application to safety related systems and/or help to identify and resolve safety related questions.

COSTS: Operational personnel and test conductors = $120K
Test consumables = $100K
Other = $ 80K

Total = $300K

CONCLUSIONS AND RECOMMENDATIONS: (TBD)

TEST 22 (TBD-299)

TITLE: Laboratory Test: Technology Integration

RESPONSIBLE PROJECT OFFICE: DOE Design and Test Organizations

TEST CONDUCTOR: M&O Design and Test Organizations

SUPPORT: Equipment vendors

TEST LOCATION: Vendor facility or test laboratory

PURPOSE: Engineering models will be developed to test the system integration aspects of design concepts. The integration of diverse off-the-shelf systems, products, components and technologies into more complex systems is an important step in the design/development process. Small scale, operational, engineering models will be developed to serve as testbeds for testing and demonstrating system level integration of hardware and software design concepts.

PERIOD OF PERFORMANCE: The test plan will be developed in Q1 FY 2001. Testing to begin in Q4 of FY 2001 and carry over into Q4 of FY 2003. Test data analyzed and anomalies resolved before technology is selected for baseline design activities.

TEST DESCRIPTION: The mobile remote systems envisioned for use in the repository are composed of several diverse subsystem technologies including: locomotion, power, telecommunications, control and command, vision systems, manipulation, actuators, sensors and instrumentation, and thermal control elements. Many of the issues that affect the design, control, and reliability of mobile remote systems are identifiable and addressable only during system level integration. Significant design and integration efforts are typically required when bringing together multiple diverse and independent systems into a unified system.

It is important that the YMP staff become familiar with and fully understand the system level integration issues that will need to be addressed during the design of mobile repository vehicles. It is also important to investigate overall system reliability rather than just the reliability of individual components. These objectives will be accomplished by developing and demonstrating an operational engineering model of a 1/4 scale remotely operated rail-based gantry vehicle. This activity includes development of a design, fabrication, assembly and testing. Note: A portion of the work may be contracted to an independent research institution, such as a commercial company or university laboratory, to conduct some elements of the task.

TEST INTERFACES:

- Waste emplacement system
- Performance confirmation system
- Waste retrieval system
- Backfill emplacement system
- Subsurface emplacement transportation system

- Subsurface safety and monitoring system
- Site communication system

TEST CONSTRAINTS: Approximately simulate confined spaces and physical characteristics of the subsurface environment.

TEST CONFIGURATION:

Test Article: Specific make and model TBD during test plan development.

Test Facilities: Vendor/contractor supplied

Requirement	Test Objective
The system shall provide redundant methods for monitoring the position for all remote transport and emplacement operations. [10 CFR 60.131(b)(5)(ii)]	This test shall examine multiple technologies that can be implemented in a redundant manner.
No human entry is planned in the emplacement drifts while waste packages are present. The waste emplacement/retrieval equipment may use robotics and/or remote control features to perform operations and monitoring within the emplacement drifts. This assumption is Key 013 of the Controlled Design Assumption [CDA Key 013].	This test shall examine core technologies that, if confirmed suitable, will permit and enable the design of systems that can provide the means for remote monitoring and control.
The system shall be designed so that environmental conditions do not interfere with safety functions. [10 CFR 60.131 (b)(1) and (b)(8)]	The test shall examine the suitability and feasibility of applying the specific technologies within anticipated repository operating environments.
Update license application information during the license application review process by inclusion of "Results of research programs carried out to confirm the adequacy of designs." [10 CFR 60.24]	This series of tests shall help to confirm the adequacy of the designs.

Controlled Design Assumptions Document (CDA) (CRWMS M&O 1998)

COSTS: Operational personnel and test conductors = $1.5M
Test consumables = $400K
Other = $300K

Total = $2.2 M

CONCLUSIONS AND RECOMMENDATIONS: (TBD)

TEST 23 (TBD-300)

TITLE: Mockup: Transport Locomotive, with Remote Operations Control Station

RESPONSIBLE PROJECT OFFICE: DOE Design and Test Organizations

TEST CONDUCTOR: M&O Design and Test Organizations

SUPPORT: Equipment vendors/contractors

TEST LOCATION: Vendor facility or test laboratory

PURPOSE: Full-scale prototype testing will involve development, environmental testing and field testing of prototype systems. These comprehensive tests will be used to validate overall system design concepts, system performance, and reliability, and will be conducted prior to the release of final design packages. These tests will include evaluation of fully operational prototype systems of the emplacement gantry, transport locomotive, waste package transporter, waste package loading/unloading equipment, and remote inspection gantry.

PERIOD OF PERFORMANCE: The test plan will be developed in Q1 FY 2003. Testing to begin in Q4 of FY 2004 and carry over into Q4 of FY 2006. Test data analyzed and anomalies resolved before technology is selected for baseline design activities.

TEST DESCRIPTION: The waste emplacement, retrieval, and performance confirmation concepts involve first-of-kind machines, in new applications. With engineering systems of this nature, it is crucial that full scale engineering prototypes be developed and tested prior to completion of the final detail design process. Design is a learning and iterative process and good prototype development is essential for developing reliable, robust, and well proven systems.

This activity will design a full scale operational prototype of the transport locomotive including power, communication, control and command, and a centralized operator remote control interface.

The procurement, fabrication, assembly, integration and testing of this prototype will be accomplished after the four year window of this plan during the three years the license application is being reviewed by the NRC.

TEST INTERFACES:

- Waste emplacement system
- Performance confirmation system
- Waste retrieval system
- Backfill emplacement system
- Subsurface emplacement transportation system
- Subsurface safety and monitoring system
- Site communication system

TEST CONSTRAINTS: Approximately simulate confined spaces and physical characteristics of the subsurface environment.

TEST CONFIGURATION:

Test Article: Specific make and model TBD during test plan development.

Test Facilities: Vendor/contractor supplied

Requirement	Test Objective
The system shall provide redundant methods for monitoring the position for all remote transport and emplacement operations. [10 CFR 60.131(b)(5)(ii)]	This test shall examine multiple technologies that can be implemented in a redundant manner.
No human entry is planned in the emplacement drifts while waste packages are present. The waste emplacement/retrieval equipment may use robotics and/or remote control features to perform operations and monitoring within the emplacement drifts. This assumption is Key 013 of the Controlled Design Assumption. [CDA Key 013].	This test shall examine core technologies that, if confirmed suitable, will permit and enable the design of systems that can provide the means for remote monitoring and control.
The system shall be designed so that environmental conditions do not interfere with safety functions. [10 CFR 60.131 (b)(1) and (b)(8)]	The test shall examine the suitability and feasibility of applying the specific technologies within anticipated repository operating environments.
Update license application information during the license application review process by inclusion of "Results of research programs carried out to confirm the adequacy of designs." [10 CFR 60.24]	This series of tests shall help to confirm the adequacy of the designs.

Controlled Design Assumptions Document (CDA) (CRWMS M&O 1998)

COSTS: Operational personnel and test conductors = $1.9 M
Test consumables = $1.0 M
Other = $1.0 K

Total = $3.9 M

CONCLUSIONS AND RECOMMENDATIONS: (TBD)

TEST 24 (TBD-301)

TITLE: Mockup: Emplacement Gantry, with Remote Operations Control Station

RESPONSIBLE PROJECT OFFICE: DOE Design and Test Organizations

TEST CONDUCTOR: M&O Design and Test Organizations

SUPPORT: Equipment vendors/contractors

TEST LOCATION: Vendor facility or test laboratory

PURPOSE: Full-scale prototype testing will involve development, environmental testing and field testing of prototype systems. These comprehensive tests will be used to validate overall system design concepts, system performance, and reliability, and will be conducted prior to the release of final design packages. These tests will include evaluation of fully operational prototype systems of the emplacement gantry, transport locomotive, waste package transporter, waste package loading/unloading equipment, and remote inspection gantry.

PERIOD OF PERFORMANCE: The test plan will be developed in Q1 FY 2003. Testing to begin in Q4 of FY 2004 and carry over into Q4 of FY 2006. Test data analyzed and anomalies resolved before technology is selected for baseline design activities.

TEST DESCRIPTION: The waste emplacement, retrieval, and performance confirmation concepts involve first-of-kind machines, in new, never-attempted before applications. With engineering systems of this nature, it is crucial that full scale engineering prototypes be developed and tested prior to completion of the final detail design process. Design is a learning and iterative process and good prototype development is essential for developing reliable, robust, and well proven systems.

This activity will design a full-scale operational prototype of the emplacement gantry including power, communication, control and command, and a centralized operator remote control interface.

The procurement, fabrication, assembly, integration and testing of this prototype will be accomplished after the four year window of this plan during the three years the license application is being reviewed by the NRC.

TEST INTERFACES:

- Waste emplacement system
- Performance confirmation system
- Waste retrieval system
- Backfill emplacement system
- Subsurface emplacement transportation system
- Subsurface safety and monitoring system
- Site communication system

TEST 24 (TBD-301) (Continued)

TEST CONSTRAINTS: Approximately simulate confined spaces and physical characteristics of the subsurface environment.

TEST CONFIGURATION:

Test Article: Specific make and model TBD during test plan development.

Test Facilities: Vendor/contractor supplied

Requirement	Test Objective
The system shall provide redundant methods for monitoring the position for all remote transport and emplacement operations. [10 CFR 60.131(b)(5)(ii)]	This test shall examine multiple technologies that can be implemented in a redundant manner.
No human entry is planned in the emplacement drifts while waste packages are present. The waste emplacement/retrieval equipment may use robotics and/or remote control features to perform operations and monitoring within the emplacement drifts. This assumption is Key 013 of the Controlled Design Assumption. [CDA Key 013].	This test shall examine core technologies that, if confirmed suitable, will permit and enable the design of systems that can provide the means for remote monitoring and control.
The system shall be designed so that environmental conditions do not interfere with safety functions. [10 CFR 60.131 (b)(1) and (b)(8)]	The test shall examine the suitability and feasibility of applying the specific technologies within anticipated repository operating environments.
Update license application information during the license application review process by inclusion of "Results of research programs carried out to confirm the adequacy of designs." [10 CFR 60.24]	This series of tests shall help to confirm the adequacy of the designs.

Controlled Design Assumptions Document (CDA) (CRWMS M&O 1998)

COSTS: Operational personnel and test conductors = $1.9 M
Test consumables = $1.0 M
Other = $1.0 K

Total = $3.9 M

CONCLUSIONS AND RECOMMENDATIONS: (TBD)

TEST 25 (TBD-302)

TITLE: Mockup: Waste Package Loading/Unloading Mechanism with Remote Operations Control Station

RESPONSIBLE PROJECT OFFICE: DOE Design and Test Organizations

TEST CONDUCTOR: M&O Design and Test Organizations

SUPPORT: Equipment vendors

TEST LOCATION: Vendor facility or test laboratory

PURPOSE: Full-scale prototype testing will involve development, environmental testing and field testing of prototype systems. These comprehensive tests will be used to validate overall system design concepts, system performance, and reliability, and will be conducted prior to the release of final design packages. These tests will include evaluation of fully operational prototype systems of the emplacement gantry, transport locomotive, waste package transporter, waste package loading/unloading equipment, and remote inspection gantry.

PERIOD OF PERFORMANCE: The test plan will be developed in Q1 FY 2003. Testing to begin in Q4 of FY 2004 and carry over into Q4 of FY 2006. Test data analyzed and anomalies resolved before technology is selected for baseline design activities.

TEST DESCRIPTION: The waste emplacement, retrieval, and performance confirmation concepts involve first-of-kind machines, in new, never-attempted before applications. With engineering systems of this nature, it is crucial that full scale engineering prototypes be developed and tested prior to completion of the final detail design process. Design is a learning and iterative process and good prototype development is essential for developing reliable, robust, and well proven systems.

This activity will design a full scale operational prototype of the waste package loading/unloading mechanism including power, communication, control and command, and a centralized operator remote control interface. It also includes a full scale mock of the emplacement drift docking facilities and equipment.

The procurement, fabrication, assembly, integration and testing of this prototype will be accomplished after the four year window of this plan during the three years the license application is being reviewed by the NRC.

TEST INTERFACES:

- Waste emplacement system
- Performance confirmation system
- Waste retrieval system
- Backfill emplacement system
- Subsurface emplacement transportation system

- Subsurface safety and monitoring system
- Site communication system

TEST CONSTRAINTS: Approximately simulate confined spaces and physical characteristics of the subsurface environment.

TEST CONFIGURATION:

Test Article: Specific make and model TBD during test plan development.

Test Facilities: Vendor/contractor supplied

Requirement	Test Objective
The system shall provide redundant methods for monitoring the position for all remote transport and emplacement operations. [10 CFR 60.131(b)(5)(ii)]	This test shall examine multiple technologies that can be implemented in a redundant manner.
No human entry is planned in the emplacement drifts while waste packages are present. The waste emplacement/retrieval equipment may use robotics and/or remote control features to perform operations and monitoring within the emplacement drifts. This assumption is Key 013 of the Controlled Design Assumption. [CDA Key 013].	This test shall examine core technologies that, if confirmed suitable, will permit and enable the design of systems that can provide the means for remote monitoring and control.
The system shall be designed so that environmental conditions do not interfere with safety functions. [10 CFR 60.131 (b)(1) and (b)(8)]	The test shall examine the suitability and feasibility of applying the specific technologies within anticipated repository operating environments.
Update license application information during the license application review process by inclusion of "Results of research programs carried out to confirm the adequacy of designs." [10 CFR 60.24]	This series of tests shall help to confirm the adequacy of the designs.

Controlled Design Assumptions Document (CDA) (CRWMS M&O 1998)

COSTS: Operational personnel and test conductors = $1.9 M
Test consumables = $1.0 M
Other = $1.0 K

Total = $3.9 M

CONCLUSIONS AND RECOMMENDATIONS: (TBD)

TEST 26 (TBD-303)

TITLE: Waste Package Transporter Functions Mockup Test

RESPONSIBLE PROJECT OFFICE: DOE Test Organization

TEST CONDUCTOR: M&O Design and Test Organizations

SUPPORT: Vendor, equipment manufacturer, MGR Repository Design - Mechanical Engineering and Remote Systems - and System Engineering

TEST LOCATION: Simulation of system/equipment at vendors facility and/or in subsurface access/emplacement drifts

TEST PURPOSE: This test will demonstrate a number of critical equipment functions on the transporter that are essential for a reliable transport and transfer of waste packages between the waste handling building and the subsurface repository.

PERIOD OF PERFORMANCE: 8-week period between the years 2003 an 2005

TEST DESCRIPTION: Verify the ability to receive and transfer a waste package between a typical transfer dock - either at the waste handling building or in the subsurface repository - and a waste package transporter. Various tests will demonstrate a number of system functions:

- Transporter alignment of rail systems
- Transporter door functions (to open and close)
- Rail car restraint functions (to engage and disengage)
- Waste package loading/unloading functions
- Waste package transfer on a reusable rail car

Modeling and analysis will also be performed/supported to confirm acceptable radiation levels during waste receipt and sub-normal conditions.

Note: All of the above must be remotely controlled.

TEST INTERFACES (SDD):

- SS17, Waste Emplacement System
- SS21, Waste Retrieval System
- SS24, Subsurface Emplacement Transportation System

TEST CONSTRAINTS: Bounding dimensions and mass loadings for full range of waste packages.

TEST CONFIGURATION: (TBD)

TEST 26 (TBD-303) (Continued)

Requirement	Test Objective
The transporter (system) shall reduce the radiation levels TBD mrem/hour for personnel located a minimum distance of TBD meters away from all surfaces of a loaded and sealed waste emplacement transporter.	Confirm acceptable radiation levels during waste receipt (transfer and transport by analysis). Confirm, through analysis, acceptable level radiation levels for accidents (i.e., sub-normal conditions).
The system shall be capable to align and engage with a transfer dock and demonstrate the functionality of the door mechanism, the restraint device and the loading/unloading mechanism.	Confirm functionality of following subsystems: - Transporter alignment at transfer dock - Door system to open and close - Restraint device to engage and disengage - Loading/unloading mechanism for waste package transfer.
The system shall be capable of transferring and transporting a loaded waste package from the waste handling building to the final emplacement drift location with a throughput rate of 530 TBV disposal containers per year.	Confirm the ability to complete an operation cycle with a loaded waste package at a rate TBD. Confirm tests at "off -normal" conditions using cold waste packages.
The system shall transport and transfer waste packages with: Length - 3700 to 6200 mm (TBV) Diameter - 1250 to 2000 mm (TBV) Depth of skirt - 225mm (TBV) Thickness of skirt - 60 mm (TBV) Ready for emplacement weight - 32,236 to 83,000 kg (TBV)	Confirm the ability to receive, transport and discharge the full range of waste packages.
The system shall have a surge throughput capacity of 20% (TBV) for a period of four (TBV) months.	Confirm through analysis monthly throughput requirements to receive and to handle waste packages.
The system shall be capable of accepting an intact emplaced waste package and transport it to the waste handling facility within TBD hours.	Confirm waste package removal time required.
The system shall be capable of relocating an emplaced waste package from one emplacement drift to an alternate drift within TBD hours.	Confirm waste package location time requirement.

COSTS: (TBD)

CONCLUSIONS AND RECOMMENDATIONS: (TBD)

TEST 27 (TBD-304)

TITLE: Gantry Transfer Functions Mockup Test

RESPONSIBLE PROJECT OFFICE: DOE Test Organization

TEST CONDUCTOR: M&O Test Organization, MGR Repository Design - Mechanical Engineering and Remote Systems - and System Engineering

SUPPORT: Vendor/manufacturer

TEST LOCATION: Simulation of system/equipment at vendors facility and/or in subsurface access/emplacement drifts

TEST PURPOSE: To demonstrate the reliability of the proposed concept in an environment that requires that all gantry operations are remotely controlled.

PERIOD OF PERFORMANCE: 8-week period between the years 2003 and 2005.

TEST DESCRIPTION: Demonstrate the reliability of the system to transport the gantry from the waste handling building to the subsurface repository and to transfer the gantry into and out of a typical emplacement drift.

TEST INTERFACES (SDD):

- SS17, Waste Emplacement System
- SS21, Waste Retrieval System
- SS24, SS Emplacement Transportation System

TEST CONSTRAINTS: The reliance on a system that is all remotely controlled.

TEST CONFIGURATION: (TBD)

REQUIREMENT/OBJECTIVE: (TBD)

Requirement	Test Objective
The gantry shall be capable to transfer remotely controlled from a gantry carrier into the entrance of an emplacement drift.	Demonstrate compatibility of the gantry carrier for accurate alignment at a transfer dock and the transfer/unloading function of the emplacement gantry.
The system shall be capable to transfer and transport the emplacement gantry from the surface facility to the subsurface repository.	Demonstrate compatibility of the system for transport and transfer the gantry at a transfer dock.
The gantry shall be capable to transfer remotely controlled from a transfer dock at the drift entrance onto a gantry carrier for transfer to another drift.	Demonstrate compatibility of the gantry carrier for accurate alignment at a transfer dock and the transfer/loading function of the emplacement gantry.

COSTS: (TBD)

CONCLUSIONS AND RECOMMENDATIONS: (TBD)

TEST 28 (TBD-305)

TITLE: Gantry Operations Mockup Test

RESPONSIBLE PROJECT OFFICE: DOE Test Organization

TEST CONDUCTOR: M&O Test Organization, MGR Repository Design - Mechanical Engineering and Remote Systems - and System Engineering

SUPPORT: Vendor/manufacturer

TEST LOCATION: Simulation of system/equipment at vendors facility and/or in subsurface access/emplacement drifts

TEST PURPOSE: To demonstrate the reliability of the proposed concept in an environment that requires that all gantry operations are remotely controlled.

PERIOD OF PERFORMANCE: 8-week period between the years 2003 and 2005

TEST DESCRIPTION: This test will demonstrate all functions that are necessary for waste package emplacement and retrieval. Various tests will demonstrate a number of system functions:

- Positioning of the gantry over a waste package
- Lifting mechanism
  - Demonstrate engagement of the lifting heads with the waste package
  - Demonstrate the ability to raise and lower a waste package as needed
- Travel of the gantry loaded with a waste package
- Positioning of waste package pedestals
- Retrieval of an emplaced waste package

Note: All of the above functions will be remotely controlled.

TEST INTERFACES (SDD):

- SS17, Waste Emplacement System
- SS21, Waste Retrieval System

TEST CONSTRAINTS:

- The reliance on a system that is all remotely controlled
- Bounding dimensions and mass loadings for full range of waste packages

TEST CONFIGURATION: (TBD)

Requirement	Test Objective
The gantry (system) shall be capable to position and center itself accurately over a waste package placed on a reusable rail car and or a pedestal in an emplacement drift.	Confirm through test the ability to accurately position and center itself for the full range of waste packages.
The lifting mechanism of the gantry shall be capable to engage a waste package (and disengage) at its end skirts and to raise and lower a waste package from a maximum height of (mm, TBV). The range of waste packages to be handled will be as follows: Length - 3700 to 6200 mm (TBV) Diameter - 1250 to 2000 mm (TBV) Depth of skirt - 225 mm (TBV) Thickness of skirt - 60 mm (TBV) Ready for Emplacement Weight - 32,236 to 83,000 kg (TBV)	Confirm through test the ability to engage (and disengage) and to raise and lower the full range of waste packages.
The system shall transport and emplace waste packages with: Length - 3700 to 6200 mm (TBV) Diameter - 1250 to 2000 mm (TBV) Depth of skirt - 225 mm (TBV) Thickness of skirt - 60 mm (TBV) Ready for Emplacement Weight - 32,236 to 83,000 kg (TBV)	Confirm through test the ability to transport and emplace the full range of waste packages.
The system shall have a surge throughput capacity of 20% (TBV) for a period of four (TBV) months.	Confirm monthly throughput requirements for receiving and handling waste packages.
The system shall be capable of removing an intact emplaced waste package and transport it to the drift entrance within TBD hours.	Confirm waste package removal time required
The system shall be capable of relocating an emplaced waste package from the emplacement location to an alternate drift within TBD hours.	Confirm waste package location time requirement.

COSTS: (TBD)

CONCLUSIONS AND RECOMMENDATIONS: (TBD)

TEST 29 (TBD-306)

TITLE: Cask/Dual Purpose Canister Cool-Down Laboratory Tests

RESPONSIBLE PROJECT OFFICE: DOE Test Organization

TEST CONDUCTOR: M&O Design and Test Organizations

SUPPORT: Equipment vendors, M&O Surface Design and test personnel at (TBD) test facility

TEST LOCATION: (TBD) - Likely candidates are existing power reactor material handling facilities with bare fuel pools, and operational and support equipment areas fairly similar to the MGR waste handling facility cask preparation pits, and pools. Other candidates are DOE facilities at national sites such as Hanford, Idaho Falls, Oak Ridge et al. Other possibilities are an early MGR test and evaluation facility (TBD), or early construction of the MGR mockup building. It's doubtful that a major testing laboratory such as Associated Testing Laboratories, or Wiley Laboratories will have the resources for this test.

PURPOSE: The primary purpose of the test is to determine the following:

Cool-down preparation operations shall be maintained to the following:

- Dual purpose canister prep: (TBD) minutes for cask sampling, opening (lid removal), and cool-down prep (cool-down attachments to dual purpose canister)
- Bare fuel cask prep: (TBD) minutes for cask sampling, cool-down prep (cool-down attachments to cask), and loading the cask into the pool

Cask/dual purpose canister cool-down duration shall be achieved within the constraints of the existing material handling, support equipment, and tooling concepts:

- Dual purpose canister cool-down: (TBD) minutes to reach (TBD) temperature
- Bare fuel cask cool-down: (TBD) minutes to reach (TBD) temperature

The duration each test procedure step shall be logged with the temperatures, pressures, cooling flow etc. correlating information. Operate the safety, and failure recovery methods, and equipment concepts, and determine if they are adequate. Log all delays, drops, failures, and damage to Casks/dual purpose canisters, cool-down and other support equipment. Schedule re-test of critical procedures that can be optimized without re-design. Assess and report on existing cask/dual purpose canister cooling methods, and equipment, and if they are adequate, or if manual, semi-automatic, or special control methods, or equipment will optimize operations, or minimize time.

TEST PREREQUISITES: The following will be provided to support testing:

- **Test Organization:** Test plan, procedures, test casks/dual purpose canisters, fixtures (connections) and tooling, adaptors for test interfaces, and prototype cask/dual purpose canister cooling system

- **Test Facility:** Facility dry handling areas, support operators, heavy-lift handling equipment, manipulators, viewing systems, and support systems adequate to maintain an operational environment that minimizes operational uncertainties and maintains safety

PERIOD OF PERFORMANCE: Expected to be within 12 to 24 months of equipment request for proposal issue. Test duration is five to seven working days.

TEST DESCRIPTION: Test casks and a dual purpose canister will be shipped to the candidate test facility, stationed in the test area, and prepared for the test. Test casks/dual purpose canister will duplicate mass, size, and heat generation to adequately determine cooling ability. Each bare fuel cask and dual purpose canister configuration will be representative of an actual shipment, and will likely include test heaters, or heated inactive fuel assemblies providing as close to actual heat outputs expected from shipments with SNF. The first phase of the test is "cask prep" and will include sampling the cask internal parameters, removing the lids from casks with dual purpose canister's, and attaching the prototype cooling system (or test facility cooling system) to the dual purpose canister fixtures. Cooling systems will also be attached to fixtures on bare fuel casks. The tests will be performed to determine if the material handling methodology is feasible, and is optimized within the time constraints required for MGR throughput, and ALARA exposures to operating personnel.

The second phase of the test is "cool down," and includes operating the test facility or prototype cooling system to determine if the cask/dual purpose canister prototype cooling system, support equipment and methodology is feasible, and is optimized within the time constraints required for MGR throughput. An assessment of the quantity of low-level waste generated by the cooling system will be determined.

TEST INTERFACES: The following interfaces will be controlled for testing:

- Test facility operating areas, material handling, environmental, and operating interfaces per the test plan section

- Cask and dual purpose canister interfaces per ICD

TEST CONSTRAINTS: The test facility, material handling areas, and equipment shall operate within handling limits, and performance parameters close to, or exceeding the waste handling building design basis, specifically for loads, operating speeds, acceleration, safety features, lighting, visual aids and operating environment as defined in the test plan section.

REQUIREMENT/OBJECTIVE: (TBD)

Requirement	Test Objective
The system shall provide features to sample, measure, and monitor the shipping cask or non-disposable canister variables defined in Table (TBD) prior to and during the cask or canister opening operations. [MGDS RD 3.2]	Tests will be performed to determine if the material handling methodology is feasible, and is optimized within the time constraints required for MGR throughput, and ALARA exposures to operating personnel.
The system shall cool the fuel assemblies in the casks and non-disposable canisters until the exit coolant reaches TBD degrees Celsius prior to cask transfer into the pool. [MGDS RD 3.2.B]	Operate the test facility or prototype cooling system to determine if the cask/dual purpose canister prototype cooling system, support equipment and methodology is feasible, and is optimized within the time constraints required for MGR throughput.

Mined Geologic Disposal Systems Requirements Document (MGDS RD) (YMP 1998)

TEST CONFIGURATION:

Test Article: Cask and dual purpose canister as defined in test interfaces, loaded with integral heaters, or with active or inactive bare fuel (TBD)

- Cask/dual purpose canister cool-down equipment (TBD)
- Cask/dual purpose canister handling, tooling, vision control and data/video recording equipment

Test Facilities: Test facilities as defined in test location

COSTS: (TBD)

CONCLUSIONS AND RECOMMENDATIONS: (TBD)

INTENTIONALLY LEFT BLANK

TEST 30 (TBD-307)

TITLE: Dual Purpose Canister Underwater Opening Laboratory Tests

RESPONSIBLE PROJECT OFFICE: DOE Test Organization

TEST CONDUCTOR: M&O Design and Test Organizations

SUPPORT: Equipment vendors, M&O Surface Design and test personnel at (TBD) test facility.

TEST LOCATION: (TBD) - Likely candidates are existing power reactor material handling, or pool areas having operational and support equipment and facilities fairly similar to the MGR waste handling facility cask preparation pits. Other candidates are DOE facilities at national sites such as Hanford, Idaho Falls, and Oak Ridge. Other possibilities are an early MGR test and evaluation facility, or early construction of the MGR mockup building. It is doubtful that a major testing laboratory such as Associated Testing Laboratories, or Wiley Laboratories will have the resources for this test.

PURPOSE: The primary purpose of the test is to determine the following:

Dual purpose canister opening preparation operations shall be maintained to the following:

- Dual purpose canister prep: (TBD) minutes for removal (severing) fixture set up

Dual purpose canister open (severing) period shall be achieved within the constraints of the existing material handling, support equipment, and tooling concepts. Dual purpose canister severing: (TBD) minutes.

Waste (fines) produced by the severing operation shall be:

- Confined by the confinement system to (TBD) percent
- Equal to or less than the predicted quantity (TBD) m^3

The duration each test procedure step shall be logged with the depth of severing, severing rate, and housekeeping parameters including pool temperatures, and other correlating information. Operate the safety, and failure recovery methods, and equipment concepts, and determine if they are adequate. Log all delays, malfunctions, and damage to dual purpose canister's, severing, and other support equipment. Schedule re-test of critical procedures that can be optimized without re-design. Assess and report on dual purpose canister severing methods, and equipment, and if they are adequate, or if manual, semi-automatic, or special control methods, or equipment will optimize operations, or minimize time.

TEST 30 (TBD-307) (Continued)

TEST PREREQUISITES: The following will be provided to support testing:

- **Test Organization:** Test plan and procedures, dual purpose canister test articles, over packs, associated tooling, adaptors for test interfaces, severing system, and the waste collection system

- **Test Facility:** Facility, pool system, support operators, heavylift handling equipment, viewing systems, and (TBD) adequate to maintain an operational environment that minimizes operational uncertainties and maintains safety

PERIOD OF PERFORMANCE: Expected to be within 12 to 24 months of equipment request for proposal issue. Test duration is TBD.

TEST DESCRIPTION: This test may be integrated with underwater basket handling test. Dual purpose canister(s) will be shipped to the candidate test facility, stationed in a test pool area, and prepared for testing. The dual purpose canister configuration will be representative of an actual shipment, and include dummy fuel with close to actual dimensions and weights as expected from shipments with SNF. The first phase of the test is "dual purpose canister prep" and will include loading the dual purpose canister in an over pack, and attaching the severing tool. Tests will be performed to determine if the dual purpose canister prep material handling equipment, and methods are feasible, and optimize the time constraints for each operational step, and as required for MGR throughput. ALARA exposures for operating personnel will be evaluated in the test report.

The second phase of the test is "dual purpose canister opening," and includes operating the severing tooling to determine if the prototype severing system, and methodology is feasible, and optimized within the time constraints required for MGR throughput. The test will also be planned to determine how well the waste material and fines generated by the severing are contained by the containment system. The fines will also be collected and analyzed to determine how much low-level waste is generated.

TEST INTERFACES: The following interfaces will be controlled for testing:

- Test facility material handling, environmental, and operating interfaces per test plan (TBD)
- Dual purpose canister interfaces per ICD (TBD)

TEST CONSTRAINTS: The test facility handling and pool equipment shall operate within handling limits, and performance parameters close to, or exceeding the waste handling building design basis, specifically for loads, operating speeds, acceleration, safety features, lighting, visual aids and operating environment as defined in the test plan (TBD).

REQUIREMENT/OBJECTIVES: (TBD)

Requirement	Test Objective
The system shall provide the handling, grapples, tooling, controls, vision, inspection, surveillance and decontamination equipment required to prepare the casks, open and unload the casks and non-disposable canisters, and return the empty casks and non-disposable canisters to the cask/carrier handling system. [MGDS RD 3.2.B,3.3.D]	Tests will be performed to determine if the dual purpose canister prep material handling equipment, and methods are feasible, and optimize the time constraints for each operational step, and as required for MGR throughput and ALARA exposures to operating personnel.
The system shall collect the following control and accountability data for casks, non-disposable canisters, assemblies, and disposal containers including: estimated quantity of radioactive material per item, item identification and tag number, storage location, and movement of each fuel assembly or storage canister. [MGDS RD 3.1.D]	Tests will determine how well the waste material and fines generated by the severing are contained by the containment system. The fines will also be collected and analyzed to determine how much low-level waste is generated.

Mined Geologic Disposal Systems Requirements Document (MGDS RD) (YMP 1998)

TEST CONFIGURATION:

Test Article:

- Dual purpose canister equipment, as defined in test interfaces, with integral waste forms
- Dual purpose canister tooling, and severing equipment
- Dual purpose canister handling, vision control and recording equipment

Test Facilities: Test facilities as defined in test location

COSTS: (TBD)

CONCLUSIONS AND RECOMMENDATIONS: (TBD)

INTENTIONALLY LEFT BLANK

TEST 31 (TBD-308)

TITLE: Pool (Underwater) Basket Handling Laboratory Tests

RESPONSIBLE PROJECT OFFICE: DOE Test Organization

TEST CONDUCTOR: M&O Design and Test Organizations

SUPPORT: Equipment vendors, M&O Surface Design and test personnel at (TBD) test facility.

TEST LOCATION: (TBD) - Likely candidates are existing power reactor material handling facilities having pool areas, operational and support equipment, and facilities fairly similar to the MGR waste handling facility pools. Other candidates are DOE facilities at national sites such as Hanford, Idaho Falls, Oak Ridge, and others with similar capabilities. Other possibilities are an early MGR test and evaluation facility, or early construction of the MGR mockup building. It is doubtful that a major testing laboratory such as Associated Testing Laboratories, or Wiley Laboratories will have the resources for this test.

PURPOSE: The primary purpose of the test is to determine the following:

Bare fuel preparation operations shall be maintained to the following:

- Tooling set-up: (TBD) minutes for acquiring, and installing bare fuel grapples and fixtures (boiling water reactor [BWR] and pressurized water reactor [PWR])
- Re-tooling for BWR or PWR: (TBD) minutes for releasing existing, and acquiring, and installing new bare fuel grapples/fixtures (as required)

Bare fuel capture, removal, transfer, and installation periods shall be achieved as follows:

- BWR bare fuel transfer to a basket: (TBD) minutes average/assembly (TBD) minutes total
- PWR bare fuel transfer to a basket: (TBD) minutes average/assembly (TBD) minutes total

BWR and PWR basket capture, removal, transfer, and re-installation periods shall be achieved as follows:

- Basket capture (TBD) min.
- Full basket removal from staging (TBD) min., from transfer cart (TBD) transfer to staging (TBD) min., to transfer cart (TBD) min.
- Empty basket removal, and transfer as above

The duration of each test procedure step shall be logged including the dynamic loads during assembly and basket handling, video data, and housekeeping parameters including pool temperatures, and other correlating information. Operate the safety, and failure recovery methods, and equipment concepts, and determine if they are adequate. Log all delays, malfunctions, and damage to assemblies, baskets, and other support equipment. Schedule re-test of critical procedures that can be optimized without re-design. Assess and report on the basket handling system, and support/tooling equipment, and if they are adequate, including if manual, semi-automatic, or special control methods, or equipment will optimize operations, or minimize time.

TEST PREREQUISITES: The following will be provided to support testing:

- **Test Organization:** Test plan and procedures, basket test articles, associated tooling, adaptors for test interfaces, and staging racks as required

- **Test Facility:** Facility, pool system, support operators, heavy-lift handling equipment, viewing systems, and equipment adequate to maintain an operational environment that minimizes uncertainties and maintains safety

PERIOD OF PERFORMANCE: (TBD) Expected to be within 12 to 24 months of equipment request for proposal issue. Test duration is 3 to 5 days.

TEST DESCRIPTION: Test baskets, staging racks, and support tooling and fixtures will be shipped to the candidate test facility, stationed in the test pool area, and prepared for the test. The basket/rack pool configuration will be representative of the waste handling building pools. Fuel assemblies will be mock, or actual fuel with dimensions and weights expected from shipments with SNF. The first phase of the test is "bare fuel transfer" and will include loading BWR and PWR assemblies in and out of a basket. Tests will be performed to determine if the material handling equipment, tooling, baskets, and transfer methods are feasible, and optimize the time constraints for each operational step, and as required for MGR throughput. ALARA exposures for operating personnel will be evaluated in the test report.

The second phase of the test is "basket transfer," and includes capturing, and transferring full, and empty baskets to/from staging, and to/from the transfer cart (simulated or prototype transfer cart). Determine if the basket handling system is feasible, and optimized within the time constraints required for MGR throughput criteria. The test will also be planned to determine how well assemblies load into and out of baskets under abnormal conditions, and how well the baskets load into and out of staging and transfer carts under abnormal conditions.

TEST INTERFACES: The following interfaces will be controlled for testing:

- Test facility material handling, pool, environmental, and operating interfaces per test plan (TBD)
- Fuel assembly interfaces per ICD (TBD)

TEST CONSTRAINTS: The test facility handling and pool equipment shall operate within handling limits, and performance parameters close to, or exceeding the waste handling building design basis, specifically for equipment loads, operating speeds, acceleration, safety features, lighting, visual aids and operating environment as defined in the test plan (TBD).

REQUIREMENT/OBJECTIVES:

Requirement	Test Objective
The system shall provide the handling, grapples, tooling, controls, vision, inspection, surveillance and decontamination equipment required to prepare the casks, open and unload the casks and non-disposable canisters, and return the empty casks and non-disposable canisters to the cask/carrier handling system.[MGDS RD 3.2.B,3.3.D]	Tests will be performed to determine if the dual purpose canister prep material handling equipment, and methods are feasible, and optimize the time constraints for each operational step, and as required for MGR throughput and ALARA exposures to operating personnel. Test will also be planned to determine how well assemblies load into and out of baskets under abnormal conditions, and how well the baskets load into and out of staging and transfer carts under abnormal conditions.

Mined Geologic Disposal Systems Requirements Document (MGDS RD) (YMP 1998)

TEST CONFIGURATION:

Test Article: Basket, waste assemblies, and transfer cart. Waste assemblies shall be actual or depleted and in accordance with ICD (TBD).

- Basket/assembly handling, vision control and recording equipment
- Grapples, tooling, and support equipment

Test Facilities: Test facilities as defined in test location

COSTS: Rough order of magnitude cost estimate (TBD).

CONCLUSIONS AND RECOMMENDATIONS: (TBD)

INTENTIONALLY LEFT BLANK

TEST 32 (TBD-309)

TITLE: Disposal Container Helium and Nitrogen Inerting Laboratory Tests

RESPONSIBLE PROJECT OFFICE: DOE Test Organization

TEST CONDUCTOR: M&O Design and Test Organizations

SUPPORT: Equipment vendors, M&O Surface Design and test personnel at test facility

TEST LOCATION: (TBD) - Likely candidates are DOE facilities at national sites such as Hanford, Idaho Falls, and Oak Ridge, having operational and support equipment and facilities fairly similar to the MGR waste handling facility disposal container handling area. Disposal container suppliers are also likely to have the resources for this test. Other possibilities are an early MGR test and evaluation facility, or early construction of the mockup building. Major testing laboratories such as Associated Testing Laboratories, or Wiley Laboratories may also have the required capability.

PURPOSE: The primary purpose of the test is to determine the following:

Perform the following preparation tests for nitrogen and helium disposal container filling:

- Inerting set-up: (TBD) minutes for installing the disposal container inner seal cover, and acquiring, and installing the inerting system to the disposal container
- Inerting: (TBD) minutes for inerting, and testing the seal, and removing the inerting system
- Leak test: Maintain (TBD) psi gas pressure for (TBD) hours in a steady state condition. Maintain (TBD) psig gas pressure for (TBD) hours during waste handling operations defined in the test plan (TBD)

The duration each primary test procedure step shall be logged including the inerting pressure, flow, leakage, video data, temperature, and other housekeeping parameters, and correlating information. Operate the safety, and failure recovery methods, and equipment concepts, and determine if they are adequate. Log all delays, malfunctions, and damage to assemblies, baskets, and other support equipment. Schedule re-test of critical procedures that can be optimized without re-design. Assess and report on the basket handling system, and support/tooling equipment, and if they are adequate, including if manual, semi-automatic, or special control methods, or equipment will optimize operations, or minimize time.

TEST PREREQUISITES: The following will be provided to support testing:

- **Test Organization:** Test plan and procedures, disposal container test articles, gas supply systems, and associated tooling and adaptors for test interfaces

- **Test Facility:** Facility, test support operators, heavy-lift handling equipment, viewing systems, and equipment adequate to maintain an operational environment that minimizes uncertainties and maintains safety

PERIOD OF PERFORMANCE: (TBD) Expected to be within 12 to 24 months of equipment request for proposal issue. Test duration is 3 to 5 days.

TEST DESCRIPTION: Test disposal containers, inert gas control system, and support tooling and fixtures will be shipped to the candidate test facility, stationed in the test area, and prepared for the test. The disposal container configuration will be representative of an actual shipment, and include dummy fuel with close to actual dimensions, weights, and thermal output as expected from shipments with SNF. The first phase of the test is disposal container inerting and includes handling equipment set-up, seal cover installation, and pressurizing the disposal container with inert gas. Tests will be performed to determine if the material handling equipment, tooling, seal covers and gas systems interfaces are feasible, and optimize the time constraints for each inerting step, and as required for MGR throughput. A major design area that will be tested is the ability to interface the inerting supply with a connection inn the disposal container lid and to seal the connection after the disposal container is inerted with nitrogen.

The second phase of the test is disposal container leak testing, and includes determining if the disposal container maintains gas pressure under steady state and a variety of material handling conditions and loads. Determine if the inerting approach and equipment are feasible, and optimized within the time constraints required for MGR throughput criteria. This test will again test the connection of the inerting system and the permanent closure of the seal point after inerting the disposal container interior with helium and then permanently welding the inner and outer disposal container lid. The test will also be planned to determine how well the system performs under abnormal conditions.

TEST INTERFACES: The following interfaces will be controlled for testing:

- Test facility material handling area, environmental, and operating interfaces per test plan (TBD)
- Disposal container interfaces per ICD (TBD)

TEST CONSTRAINTS: The test facility handling areas, and equipment shall operate within handling limits, and performance parameters close to, or exceeding the waste handling building design basis, specifically for loads, operating speeds, acceleration, safety features, lighting, visual aids and operating environment as defined in the test plan (TBD).

REQUIREMENT/OBJECTIVES:

TEST 32 (TBD-309) (Continued)

Requirement	Test Objective
The system shall inert disposal containers with TBD gas to a pressure of TBD=/-TBD and maintain pressure for TBD hours. [MGDS RD 3.1.C]	Determine if the material handling equipment, tooling, seal covers and gas systems interfaces are feasible, and optimize the time constraints for each inerting step, and as required for MGR throughput. Determine if the inerting approach and equipment are feasible, and optimized within the time constraints required for MGR throughput criteria.
The system shall be designed to mitigate off-normal events by returning contains to the lag storage, assemble transfer system, canister transfer system and waste package remediation system. [MGDS RD 3.1.C]	Test will be planned to determine how well the system performs under abnormal conditions.

Mined Geologic Disposal Systems Requirements Document (MGDS RD) (YMP 1998)

TEST CONFIGURATION:

Test Article: Disposal container with test and actual internals. Assemblies shall be mock, or depleted and in accordance with ICD (TBD)

- Inert gas, and control systems
- Grapples, tooling, and support disposal container equipment and inert system handling, vision control and data recording equipment
- Inerting connection configuration (connecting, sealing, welding)

Test Facilities: Test facilities as defined in test location

COSTS: (TBD)

CONCLUSIONS AND RECOMMENDATION: (TBD)

INTENTIONALLY LEFT BLANK

TEST 33 (TBD-310)

TITLE: Optimizing Waste Handling Operations for ALARA Laboratory Tests

RESPONSIBLE PROJECT OFFICE: DOE Test Organization

TEST CONDUCTOR: M&O Design and Test Organizations

SUPPORT: Equipment vendors, M&O Surface Design and test personnel at (TBD) test facility

TEST LOCATION: (TBD) - These tests will cover a variety of waste handling procedures planned at various operating stations in the Radiologically Controlled Area of the repository. Some of the tests will be supported by M&O computer simulation models, with data input provided from selected test scenarios. Ideal facilities for these tests are an early MGR test and evaluation facility, or early construction of the mockup building. Other test facility candidates are reactor material handling facilities having waste preparation areas, operational and support equipment, fairly similar to the MGR carrier/cask preparation and waste handling facility capabilities. DOE sites such as Hanford, Idaho Falls, and Oak Ridge should also be considered.

PURPOSE: The primary purpose of the test is to perform a variety of test procedures developed to minimize the cask/carrier preparation handling durations, and a variety of equipment maintenance durations for repository stations where personnel exposures are marginal to the design criteria, and ALARA principals are prominent.

Cask/carrier preparation: perform a suite of test operations designed to minimize the operational exposures during carrier preparation bay activities, including the following:

- Shield/personnel barrier removal: Removal times (TBD) hours
- Impact limiter removal: Removal times (TBD) hours

Cask preparation pit: Perform in conjunction with PT001

Handling equipment maintenance: (TBD)

The duration of each primary test procedure step shall be logged including the video data, housekeeping parameters, and other correlating data. Operate the safety, and failure recovery methods, and equipment concepts, and determine if they are adequate. Log all delays, malfunctions, and damage to equipment, assemblies, and other support equipment. Schedule re-test of critical procedures that can be optimized without re-design. Assess and report on the handling, and maintenance systems, support/tooling equipment, and procedures, and determine if they are adequate, including if manual, semi-automatic, remote, or special control methods, or equipment will optimize operations, or minimize time.

TEST PREREQUISITES: The following will be provided to support testing:

Test Organization: Operations and maintenance test plans and procedures, test articles, process support systems, and associated tooling and adaptors for test interfaces

Test Facility: Facility, test support operators, heavy-lift handling equipment, viewing systems, and equipment adequate to maintain an operational and maintenance environment that minimizes uncertainties and maintains safety

PERIOD OF PERFORMANCE: (TBD) Tests are expected to begin within 12 to 24 months of primary equipment RFP issue. The initial test period is likely to be 1 to 3 months, and may continue into procurement.

TEST DESCRIPTION: Test articles, including test fuel assemblies and support tooling and fixtures will be shipped to the candidate test facility, stationed in the test area, and prepared for the test. Test configurations will be representative of actual shipments, the waste handling building, and CPB waste handling areas, and include mock or actual casks, and fuel assemblies with close to actual dimensions, weights, and contamination as expected from shipments with SNF. The first phase of each test will be "normal operations" where prototype or actual equipment will be operated with the planned procedures, and the deficiencies in the equipment and procedures will be identified. Failure recovery procedures will be performed as a sub-set of these tests and will be referred to as "off-normal operations".

The second phase of the test "disposal container contamination" will include scheduling re-test of critical procedures that can be optimized without re-design, and possibly the use of upgraded or new equipment or tooling.

TEST INTERFACES: The following interfaces will be controlled for testing:

- Test facility material handling area, environmental, and operating interfaces per test plan (TBD)
- MGR system/equipment interfaces per ICD (TBD)

TEST CONSTRAINTS: The test facility handling areas, and equipment shall operate within handling limits, and performance parameters close to, or exceeding the waste handling building design basis, specifically for material handling loads, performance, safety features, lighting, visual aids and operating environment as defined in the test plan (TBD).

REQUIREMENT/OBJECTIVE:

Requirement	Test Objective
The system shall provide the handling, grapples, tooling, controls, vision, inspection, surveillance and decontamination equipment required to prepare the casks, open and unload the casks and non-disposable canisters, and return the empty casks and non-disposable canisters to the cask/carrier handling system. [MGDS RD 3.2.B,3.3.D]	Tests will be performed to determine if the dual purpose canister prep material handling equipment, and methods are feasible, and optimize the time constraints for each operational step, and as required for MGR throughput and ALARA exposures to operating personnel.

Mined Geologic Disposal Systems Requirements Document (MGDS RD) (YMP 1998)

TEST CONFIGURATION:

Test Article: (TBD)

Test Facilities: Test facilities as defined in test location

COSTS: (TBD)

CONCLUSIONS AND RECOMMENDATION: (TBD)

INTENTIONALLY LEFT BLANK

TEST 34 (TBD-311)

TITLE: Supercompaction of Low-Level Waste Laboratory Tests

RESPONSIBLE PROJECT OFFICE: DOE Test Organization

TEST CONDUCTOR: M&O Design and Test Organizations

SUPPORT: Equipment vendors, M&O Surface Design and test personnel at test facility.

TEST LOCATION: (TBD) - These tests determine if low-level waste compaction, and supercompaction percentages can be achieved as planned at the MGR waste treatment building, in the RCA. Ideal facilities for these tests are low-level waste treatment equipment supplier facilities, or an early MGR test and evaluation facility, or early construction of the mockup building.

PURPOSE: The primary purpose of the test is to perform a variety of test procedures developed to determine if the low-level waste compaction, and supercompaction percentages can be achieved as planned.

- Compaction of waste into 55 gal drums: (TBD)% ± (TBD)%
- Supercompaction of waste: (TBD)% ± (TBD)%

The duration of each primary test procedure step shall be logged, including the video data, housekeeping parameters, and other correlating data. Log all delays, malfunctions, and damage to equipment, assemblies, and other support equipment. Schedule re-test of critical procedures that can be optimized without re-design. Assess and report on the compaction and supercompaction, maintenance systems, support/tooling equipment, and procedures, and determine if they are adequate, including if manual, semi-automatic, remote, or special control methods, or equipment will optimize operations, or minimize time.

TEST PREREQUISITES: The following will be provided to support testing:

- **Test Organization:** Operations and maintenance test plans and procedures, and test material, and associated tooling and adaptors for test interfaces

- **Test Facility:** Facility, test support operators, handling equipment, viewing systems, associated tooling and adaptors for test interfaces, and equipment adequate to maintain an operational and maintenance environment that minimizes uncertainties and maintains safety

PERIOD OF PERFORMANCE: (TBD) Tests are expected to begin within 12 months of primary equipment RFP issue. The test period is likely to be 2 to 5 days.

TEST DESCRIPTION: Test configurations will be representative of actual waste treatment building compaction and supercompaction designs as required to minimize test result uncertainties. The first phase of each test will be "compaction" where prototype or actual equipment with simulated waste will be operated to the planned procedures, and the deficiencies in the equipment and procedures will be identified.

The second phase of the test is supercompaction, and includes supercompacting the compacted waste for insertion in 85 gal drums. Failed test steps will be re-run if they can be optimized without equipment re-design including the use of upgraded or new equipment or tooling.

TEST INTERFACES: The following interfaces will be controlled for testing:

- Test facility material handling area, environmental, and operating interfaces
- MGR system/equipment interfaces

TEST CONSTRAINTS: The test facility handling areas, and equipment shall operate within handling limits, and performance parameters close to, or exceeding the waste treatment building design basis, specifically for material handling loads, performance, safety features, lighting, visual aids and operating environment as defined in the test plan (TBD).

REQUIREMENT/OBJECTIVE: (TBD)

Requirement	Test Objective
TBD	Perform a variety of test procedures developed to determine if the low-level waste compaction, and supercompaction percentages can be achieved as planned.

TEST CONFIGURATION:

Test Article: (TBD)
Test Facilities: Test facilities as defined in test location

COSTS: (TBD)

CONCLUSIONS AND RECOMMENDATIONS: (TBD)

TEST 35 (TBD-312)

TITLE: Systems Integration Test - Waste Emplacement System (SS17)

RESPONSIBLE PROJECT OFFICE: DOE Test Organization

TEST CONDUCTOR: M&O Test Organization

SUPPORT: Operational personnel, vendors

TEST LOCATION: Waste handling building and in the underground accesses and emplacement drifts

PURPOSE: This test will certify the waste emplacement system ready for startup test of the MGR.

PERIOD OF PERFORMANCE: 10-week period between 2008 and 2009. Test will be performed, data analyzed and anomalies resolved prior to startup test activities.

TEST DESCRIPTION: Verify the ability to receive a loaded and sealed disposal container from the waste handling building; transport the disposal container; emplace it into the drift, and return the transportation system to the surface; test the transport and emplacement of the disposal container for overall handling throughput rates; simulate accidents and unplanned outages and stoppages; activate and operate emergency equipment and procedures; provide stressing stimuli to operate the system at maximum capacity (establish the upper boundary); test system to withstand various weights and handling loads of the loaded disposal container while not functionally impairing the disposal container or the waste package support; use operational personnel and develop normal and high stressed timeliness for all critical processes.

TEST INTERFACES:

- Subsurface transportation system rail, switching system, and physical envelopes
- Engineered barrier system emplacement pedestals

TEST CONSTRAINTS:

- Quantity and type of disposal containers will be limited (as specified by the appropriate regulation)
- Testing of protective services will be conducted separately

TEST CONFIGURATION:

Test Article: Disposal containers with simulated waste

Test Facilities: Waste handling building and subsurface facility system

TEST 35 (TBD-312) (Continued)

Requirement	Test Objective
The system shall reduce the radiation levels TBD mrem/hour for personnel located a minimum distance of TBD meters away from all surfaces of a loaded and sealed waste emplacement transporter. [MGDS RD 3.1B, 3.1C] [10 CFR 60.111(a)]	Confirm acceptable radiation levels during waste receipt (emplacement by analysis). Confirm, through analysis, acceptable level radiation levels for accidents (i.e., sub-normal conditions).
The system shall be capable of transporting and emplacing a loaded disposal container from the waste handling building to the final emplacement drift location with a throughput rate of 530 TBV disposal containers per year. [MGDS RD 3.2d]	Confirm the ability to complete an operation cycle with a loaded disposal container at a rate TBD. Confirm tests at "off -normal" conditions using cold waste packages.
The system shall transport and emplace disposal containers with: Length - 3790 to 5850 mm (TBV) Diameter - 1298 to 1970 mm (TBV) Depth of skirt - 225mm (TBV) Thickness of skirt - 60 mm (TBV) Ready for Emplacement Weight - 32,236 to 69,000 kg (TBV)	Confirm the ability to receive and emplace various weight/type disposal containers.
The system shall have a surge throughput capacity of 20% (TBV) for a period of four (TBV) months.	Confirm, through test, monthly throughput requirements for receiving and handling disposal containers.
The system shall be capable of removing an intact emplaced disposal container and transport it to the waste handling facility within TBD hours.	Confirm disposal container removal time requirement.
The system shall be capable of relocating an emplaced disposal container from the emplacement location to an alternate drift within TBD hours.	Confirm disposal container location time requirement.

Mined Geologic Disposal Systems Requirements Document (MGDS RD) (YMP 1998)

COSTS: Operational personnel and test conductors = $160K
Test consumables = $ 70K
Other = $ 20K

Total = $250K

CONCLUSIONS AND RECOMMENDATIONS: (TBD)

TEST 36 (TBD-313)

TITLE: System Integration Test - Assembly Transfer System (SU10)

RESPONSIBLE PROJECT OFFICE: DOE Test Organization

TEST CONDUCTOR: M&O Test Organization

SUPPORT: Operational personnel, vendors

TEST LOCATION: Waste handling building

PERIOD OF PERFORMANCE: 10 week period between 2008 and 2009. Test will be performed, data analyzed and anomalies resolved prior to startup test activities.

PURPOSE: This test will certify that the assembly system is ready for the startup test.

TEST DESCRIPTION: Verify the ability of the assembly transfer system to remove spent fuel assemblies from the shipping casks or from staging baskets; load the assemblies into disposal containers or lag storage and position casks at the unloading station; engage contamination barriers; inspect the shipment; perform decontamination; and remove empty containers and low-level waste from the station. The test will include remove, load, position, and install functions utilizing bare fuel transfer machine, fuel assembly grapples, container carts, contamination barriers and inspection instruments. Removal shall be performed from various trucks or rail shipping casks. Test will include cutting of dual purpose canisters and removing fuel assemblies; loading fuel assemblies into baskets; loading baskets into drying vessels and wet and dry fuel transfer machines; transferring disposal containers on transfer cases; drying fuel assemblies and inerting the interiors of the disposal containers. Various types of disposal containers will be utilized. Tests to be performed will include: proof loading, normal and emergency time line testing, and emergency and safety simulations to include fire and accident.

TEST INTERFACES:

- Cask/canister handling system
- Disposal container handling system
- Waste package remediation system

TEST CONSTRAINTS:

- Quantity and type of disposal containers and transportation casks will be limited (as specified by the appropriate regulation)
- Testing of protective services will be conducted separately

TEST CONFIGURATION:

Test Article: Disposal containers, casks, non-disposable canisters, fuel assemblies and transfer cases

Test Facilities: Waste handling building and support facility systems

Requirement	Test Objective
The system shall transfer uncanistered waste with the characteristics defined in Tables TBD. [MGDS RD 3.1B, 3.1C] [10 CFR 60.111(a), 10 CFR 60.131(a)(3)]	Confirm the ability to transfer uncanistered waste of different energy information administration assembly class Confirm tests at "off -normal" conditions using cold waste packages.
The system shall have the capacity to transfer uncanistered commercial SNF at a throughput rate of 300 metric tons of uranium (mtu) per month (TBV) considering the waste is composed of no more than 230 mtu of PWR SNF assemblies or no more than 135 mtu of BWR SNF assemblies. [MGDS RD 3.2A]	Confirm the ability to transfer uncanistered commercial SNF at a rate TBD.
The system shall transfer uncanistered waste from the shipping casks and non-disposable canisters defined in Table TBD. [MGDS RD 3.3.D, 3.4.2.B, 3.4.2.C. 3.4.2.D]	Confirm the ability to transfer uncanistered DOE waste forms at the rate of TBD. Confirm tests at "off-normal" conditions.

Mined Geologic Disposal Systems Requirements Document (MGDS RD) (YMP 1998)

COSTS: Operational personnel and test conductors = $160K
Test consumables = $ 70K
Other = $ 20K

Total = $250K

CONCLUSIONS AND RECOMMENDATIONS: (TBD)

TEST 37 (TBD-314)

TITLE: Systems Integration Test - Canister Transfer System (SU11)

RESPONSIBLE PROJECT OFFICE: DOE Test Organization

TEST CONDUCTOR: M&O Test Organization

SUPPORT: Operational personnel, vendors

TEST LOCATION: Waste handling building

PURPOSE: This test will certify that the canister waste transfer system is ready for the system demonstration of the MGR.

PERIOD OF PERFORMANCE: 10-week period between 2008 and 2009. Test will be performed, data analyzed and anomalies resolved prior to startup test activities.

TEST DESCRIPTION: Verify the ability of the canister transfer system to remove canistered waste from transportation casks and load the canisters into disposal containers; provide direct transfer to disposal container or move canistered waste into a canister staging rack from the unloading station; inspect the shipment; and provide personnel with radiation protection during the transfer and temporary storage of canistered waste. Most of these functions are controlled by remotely operated equipment, therefore, the training and skill of the operators will become the measure of performance during the test. The system is semi-automatic where the operator initiates the function to be performed and the system automatically performs the task required for that function. The test will include remove, load, position, and transfer functions, utilizing grapples, bridge crane, cask and disposal container cart, contamination barriers, and inspection instruments. Various types of disposal containers will be utilized. Tests to be performed will include: proof loading, normal and emergency time line testing, and emergency and safety simulations to include fire and accident.

TEST INTERFACES:

- Cask/canister handling system
- Disposal container handling system
- Waste package remediation system

TEST CONSTRAINTS:

- Quantity and type of disposal containers and transportation casks will be limited (as specified by the appropriate regulation)
- Testing of protective services will be conducted separately

TEST CONFIGURATION:

Test Article: Disposal containers, casks, large and small canisters (with simulated waste). DOE SNF and Navy disposable high level waste canisters

Test Facilities: Waste handling building and support facility systems

REQUIREMENT/OBJECTIVE:

Requirement	Test Objective
The system shall limit potential accident releases within the waste transfer area to the radiation levels identified in Table TBD.	Confirm acceptable radiation levels during test of waste receipt and emplacement.
The system shall transfer canistered waste with the characteristics defined in Tables TBD. [MGDS RD 3.2.A]	Confirm the ability to transfer canistered waste of different type and quantity.
The system shall transfer canistered waste to the disposal container ranges defined in Table TBD.	Confirm the ability to transfer canistered waste to different disposal containers.
The system shall transfer canistered waste from the shipping casks defined in Table TBD.	Confirm the ability to transfer canistered waste from different shipping casks. Confirm tests at "off-normal" conditions.

Mined Geologic Disposal Systems Requirements Document (MGDS RD) (YMP 1998)

COSTS: Operational personnel and test conductors = $160K
Test consumables = $ 70K
Other = $ 20K

Total = $250K

CONCLUSIONS AND RECOMMENDATIONS: (TBD)

TEST 38 (TBD-315)

TITLE: The Startup Test of the MGR

RESPONSIBLE PROJECT OFFICE: DOE Test Organization

TEST CONDUCTOR: M&O Test Organization

SUPPORT: Operational personnel, vendors

TEST LOCATION: MGR site, subsurface accesses, surface, subsurface and support system facilities

PURPOSE: Successful completion of this test is necessary to demonstrate safe and reliable operations.

PERIOD OF PERFORMANCE: Nine-month period prior to license to emplace.

TEST DESCRIPTION: Demonstrate receipt of simulated waste at the gate, using different size casks and associated carriers; conduct demonstrations to include the receipt, handling, disposal, and movement of waste; develop sub-scenarios to check the emergency equipment and procedures; simulate accidents and spills; check communication systems (in all operating modes) and the surface and subsurface utilities; and conduct demonstrations using trained and qualified operational personnel and verified operational procedures.

TEST CONSTRAINTS: Testing of protective services will be conduced separately.

TEST CONFIGURATION:

Test Article: Different sized casks and associated carriers

Test Facilities: MGR waste handling, waste isolation, and operational support systems

TEST 38 (TBD-315) (Continued)

Requirement	Test Objective
Comply with the applicable provisions of 10 CFR 60, *Disposal of High-Level Radioactive Wastes in Geologic Repositories.* [CRD 3.1.1.C]	Confirm, through analysis, acceptable radiation levels and radionuclides releases for accidents (i.e., sub-normal conditions).
Capable of receiving, handling, and emplacing commercial SNF, DOE SNF, defense high-level waste (DHLW), and civilian high-level waste (CHLW) at specified annual rates. [CRD 3.2.1B][CRD 3.2.1B]	Demonstrate the ability and throughput rate to receive, handle, and emplace commercial SNF, DOE SNF, DHLW, and CHLW.
Capable of receiving and emplacing a maximum of 70% of total weight of commercial (PWR) SNF assemblies or a maximum of 45% of total weight of commercial BWR SNF assemblies. [CRD 2.4.0, 3.2.1.B]	Demonstrate the ability to receive and emplace various weight/type ratios. Demonstrate the ability to handle PWR and BWR SNF.
A monthly design capacity, equipment availability, and process efficiency of receiving, handling, and emplacing 300 mtu equivalent of commercial SNF and 40 mtu equivalent of DOE SNF, CHLW or DHLW. [CRD 3.2.1.B]	Demonstrate the monthly mtu requirements for receiving, handling, and emplacing DOE SNF, CHLW or DHLW.
Facilities shall be capable of opening sealed storage and transportation canisters, handling the SNF, and managing associated site generated waste for disposal off-site. [CRD 3.2.1E]	Demonstrate the ability of opening sealed storage and transporting canisters, and handling SNF. Demonstrate the ability for managing site generated waste for disposal off site.

Civilian Radioactive Waste Management Systems Requirements Document (CRWMS M&O 1998)

COSTS: Operational personnel and test conductors = $1.50M
Test consumables = $750 K
Other = $250 K

Total = $2.50M

CONCLUSIONS AND RECOMMENDATIONS: (TBD)

APPENDIX C
DRAFT TEST AND EVALUATION PLAN
TEST SCHEDULE

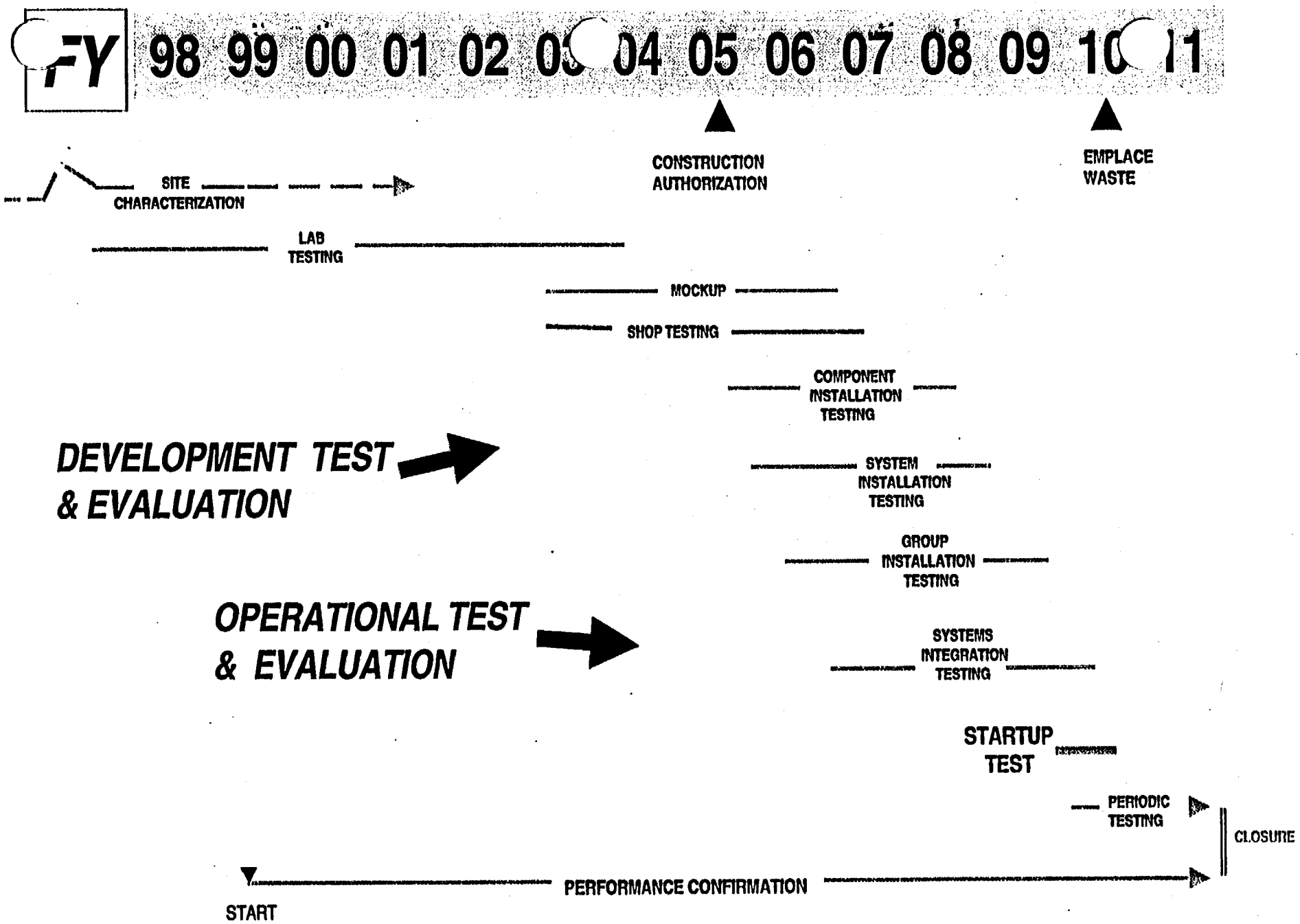

Figure C-1. Draft T&EP Test Schedule

INTENTIONALLY LEFT BLANK

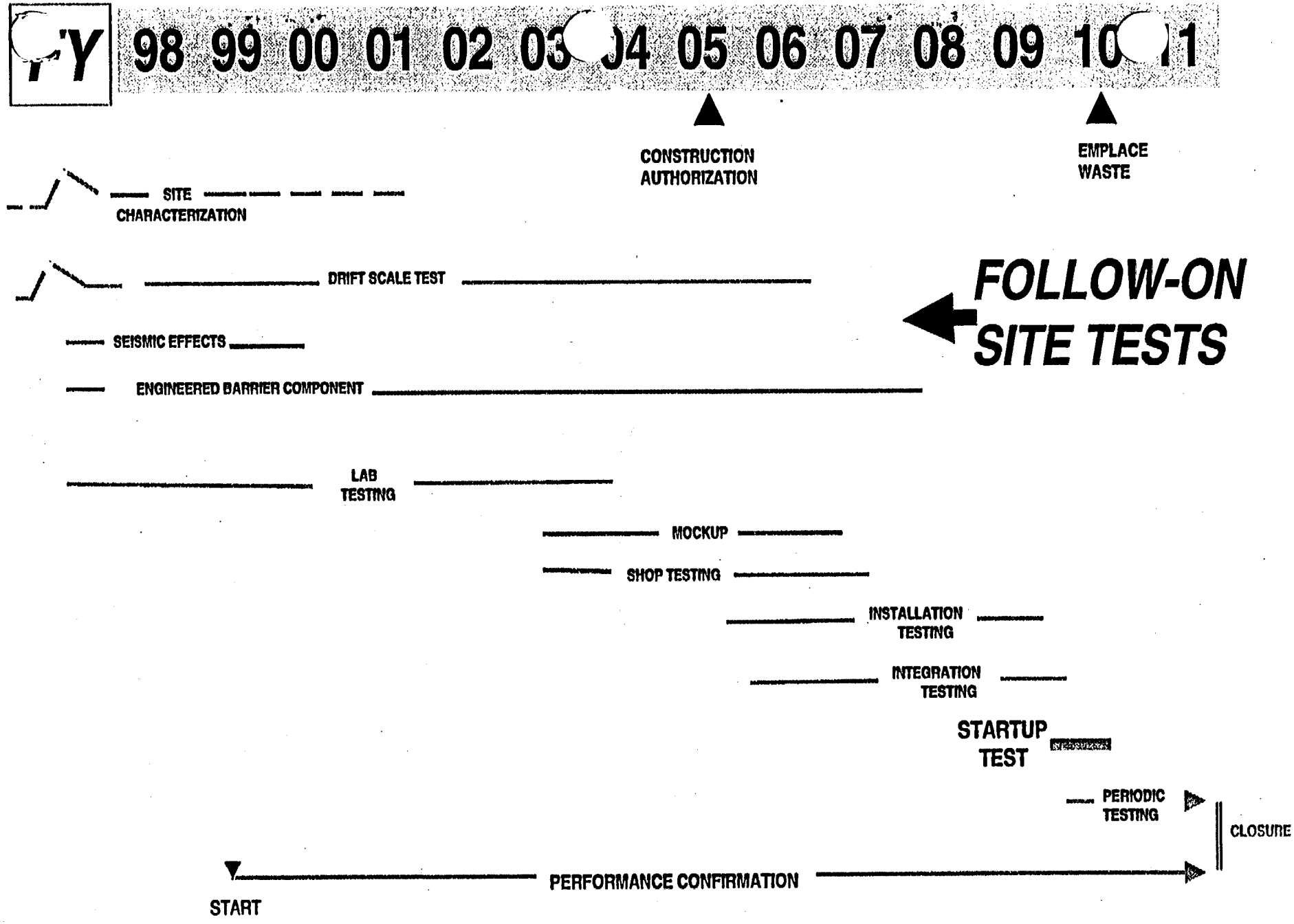

Figure C-2. Draft Follow-on Site Tests

INTENTIONALLY LEFT BLANK

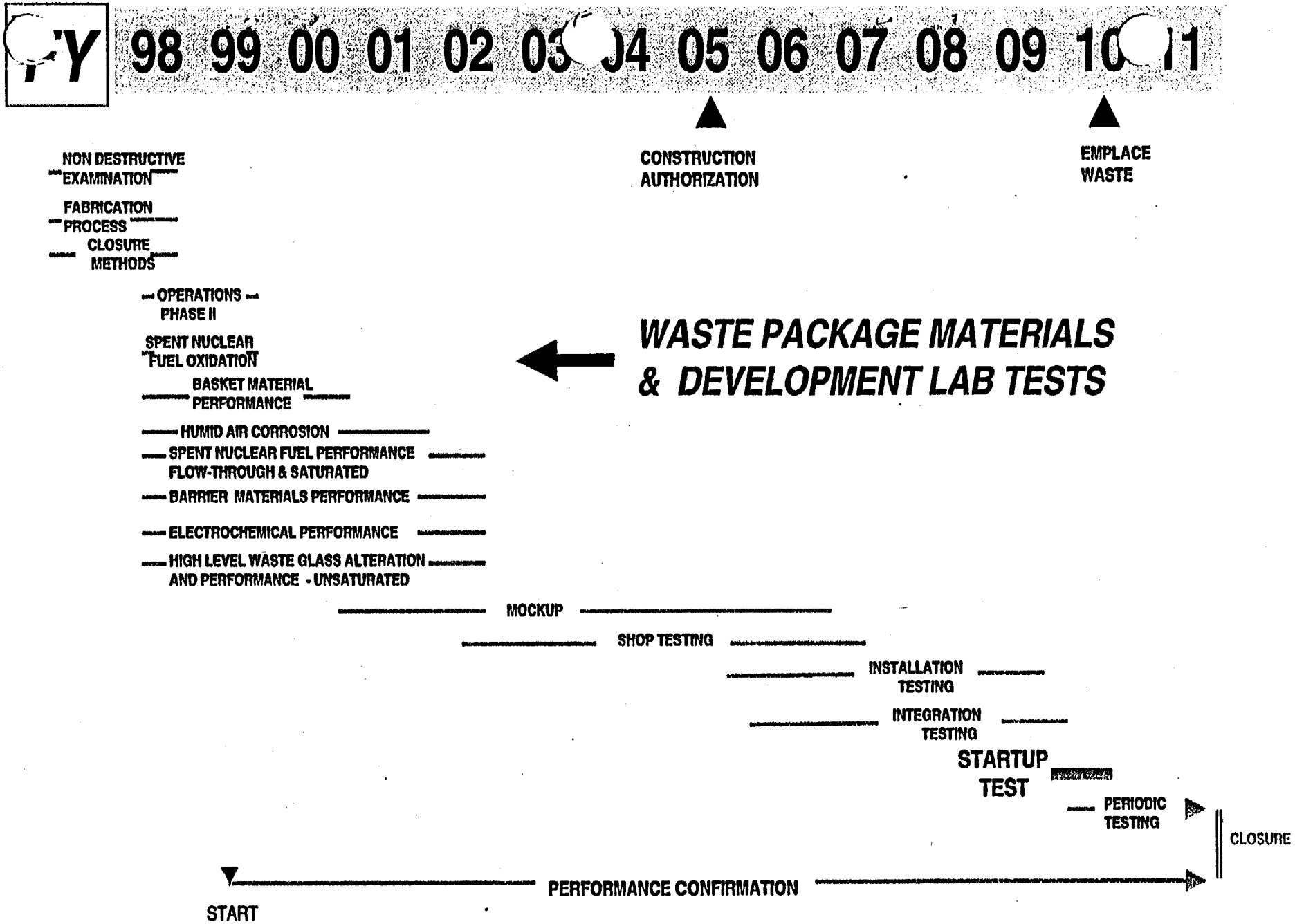

Figure C-3. Draft Waste Package Lab Tests

INTENTIONALLY LEFT BLANK

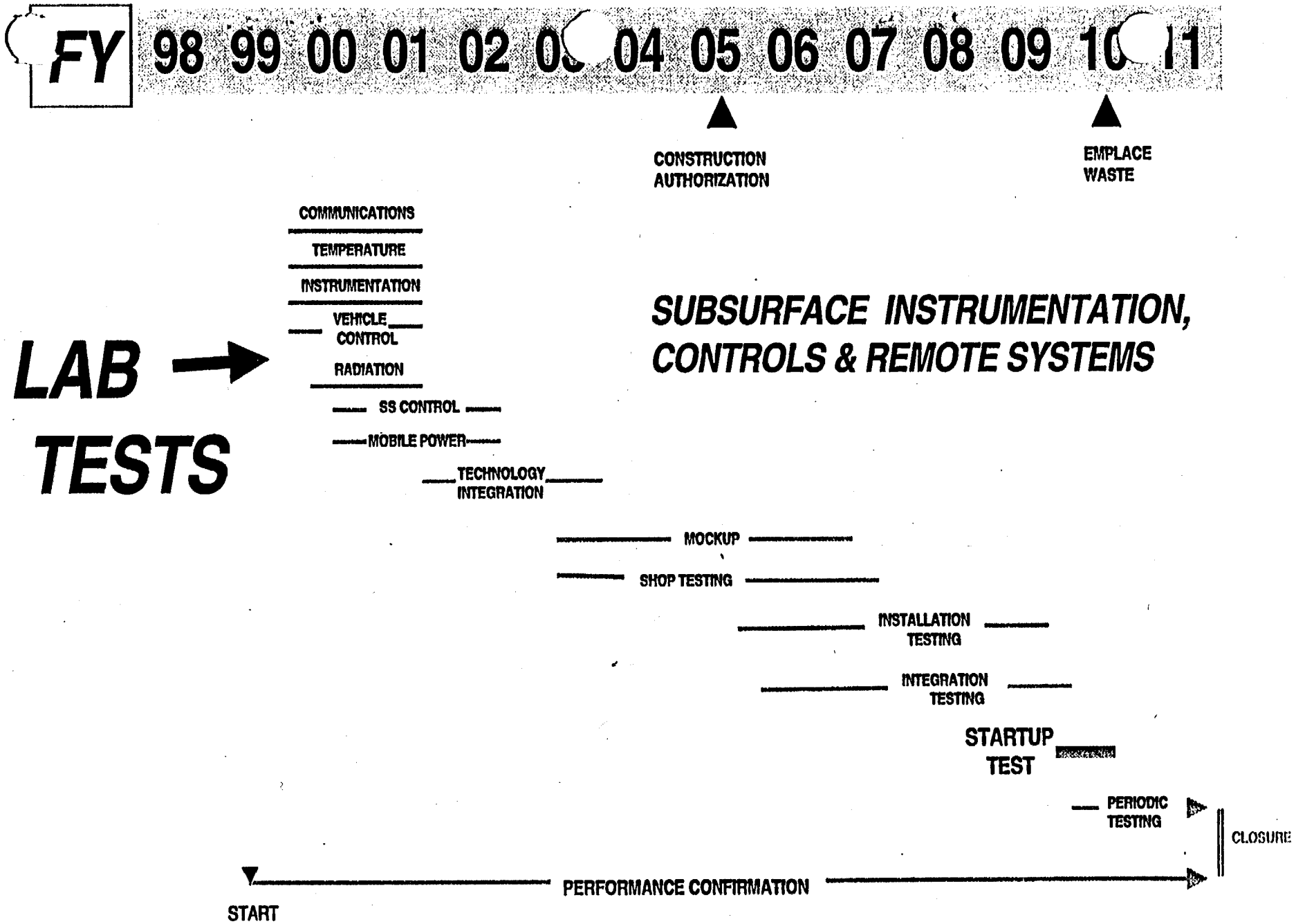

Figure C-4. Draft Subsurface Lab Tests

INTENTIONALLY LEFT BLANK

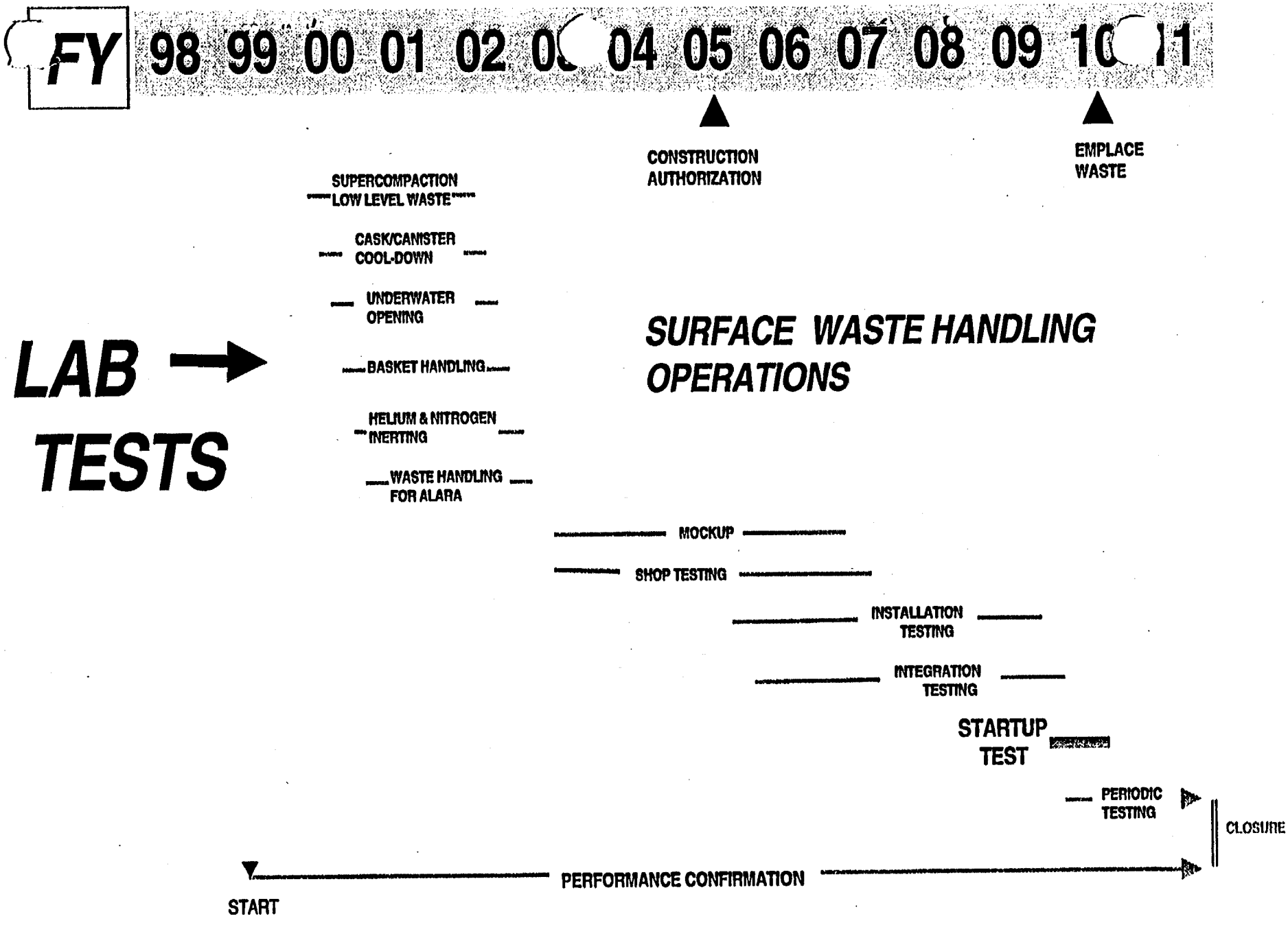

Figure C-5. Draft Surface Lab Tests

INTENTIONALLY LEFT BLANK

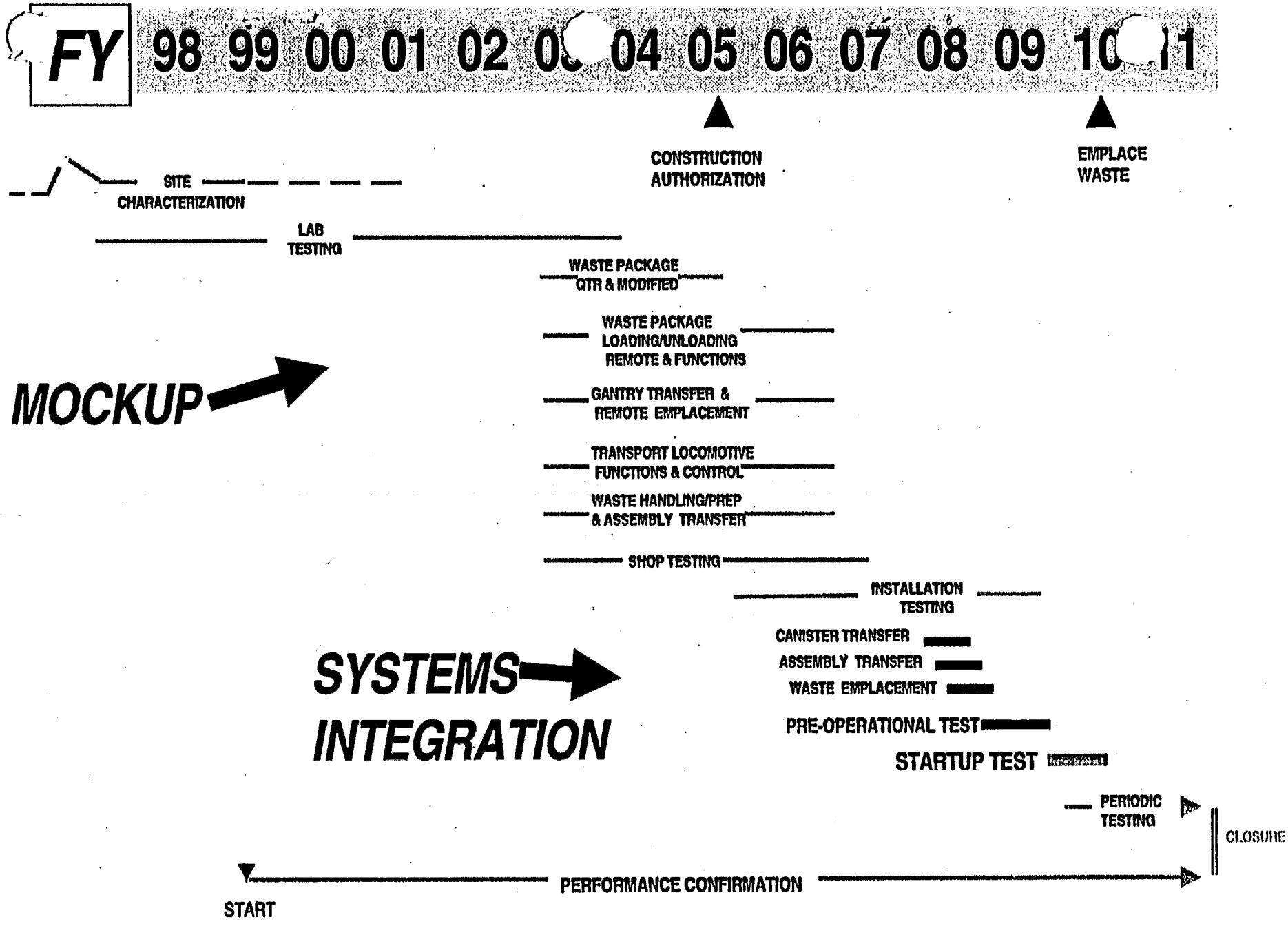

Figure C-6. Draft Mockup and Integration Tests

INTENTIONALLY LEFT BLANK