TITLE I DESIGN SUMMARY REPORT
REVISION 1
DRAFT H
VOLUME 5, APPENDIX

5.8 "Preliminary Evaluation: Three-Dimensional Far-Field Analysis for the Exploratory Shaft Facility," Draft SLTR-PDM75-13

NOTE: This document is valid for the methodology only as it pertains to the Reference Design Study.

9112020061 - Part 7

PRELIMINARY EVALUATION: THREE-DIMENSIONAL FAR-FIELD ANALYSIS FOR THE EXPLORATORY SHAFT FACILITY

by

M. Asgian

J. F. T. Agapito & Associates, Inc.
715 Horizon Dr., Suite 340
Grand Junction, CO 81506

for

Sandia National Laboratories
P. O. Box 5800
Albuquerque, NM 87185

Under Sandia Contract: 23-9590

Sandia Contract Monitor
B. Ehgartner
Geotechnical Design Devision 6314

TABLE OF CONTENTS

Section		Page
1.0	**Introduction**	1
2.0	**Repository Geometry**	1
3.0	**Heat Generation From the Repository**	2
4.0	**Thermal and Mechanical Properties of the Repository**	2
5.0	**Thermomechanical Analysis of the Repository**	3
	5.1 STRES3D Code	3
	5.2 Initial and Boundary Conditions	4
	5.3 Numerical Discretization of the Repository	4
	5.4 Description of Thermomechanical Analyses	5
	5.5 Results of the Thermomechanical Analyses	5
6.0	**Conclusions and Recommendations**	9
7.0	**References**	10

APPENDIX A - Temperatures and Induced Stress ($\Delta\sigma_{xx}, \Delta\sigma_{yy}, \Delta\sigma_{zz}, \Delta\sigma_{xy}, \Delta\sigma_{yz}, \Delta\sigma_{zx}$) and Induced Strains ($\Delta\varepsilon_{xx}, \Delta\varepsilon_{yy}, \Delta\varepsilon_{zz}, \Delta\varepsilon_{xy}, \Delta\varepsilon_{yz}, \Delta\varepsilon_{zx}$) for 10 to 10,000 Years After Waste Emplacement Begins 41

APPENDIX B - Temperature and Induced Stresses ($\Delta\sigma_{xx}, \Delta\sigma_{yy}, \Delta\sigma_{zz}, \Delta\sigma_{xy}, \Delta\sigma_{yz}, \Delta\sigma_{zx}$) in the Exploratory Shaft Facility for 10 to 10,000 Years After Waste Emplacement Begins 67

APPENDIX C - Temperature and Induced Stresses ($\Delta\sigma_{xx}, \Delta\sigma_{yy}, \Delta\sigma_{zz}, \Delta\sigma_{xy}, \Delta\sigma_{yz}, \Delta\sigma_{zx}$) in the Upper Demonstration Breakout Room and the Calico Hills Drill Room for 10 to 10,000 Years After Waste Emplacement Begins 137

APPENDIX D - Temperature and Induced Stresses ($\Delta\sigma_{x'x'}, \Delta\sigma_{y'y'}, \Delta\sigma_{z'z'}, \Delta\sigma_{x'y'}$) for the Tuff Main Drift, and Drifts CE and F'G' (Local Coordinate System $x' - y' - z'$ and Sign Conventions for Stresses are given in Figure D-16) 207

pg 6, 7 error

LIST OF TABLES

Table		Page
1a	Heat Generation from Waste Canisters 0-500 Years after Emplacement	11
1b	Heat Generation from Waste Canisters 500-10,000 Years after Emplacement	12
2a	Thermal Properties of Repository Site	13
2b	Mechanical Properties of Repository Site	13
3a	Initial Stress State	14
3b	Initial Temperatures	14
4	Peak Values of Temperature, Stress, and Strain for Exploratory Shaft 1 (ES-1)	15
5	Exploratory Shaft 1: Maximum Shear Stress Acting on a Horizontal Plane	16
6	Peak Values of Temperature, Stress, and Strain for Exploratory Shaft 2 (ES-2)	17
7	Exploratory Shaft 2: Maximum Shear Stress Acting on a Horizontal Plane	18
8	Peak Values of Temperature and Stress for the Exploratory Shaft Facility	19
9	Peak Values of Temperature and Stress for the Calico Hills Drill Room	20
10	Maximum Values of Temperatures and Stress in the Calico Hills Drill Room at 100 Years (Repository Closure)	21
11	Peak Values of Temperature and Stress for the Upper Demonstration Breakout Room	22
12	Maximum Values of Temperatures and Stress in the Upper Demonstration Breakout Room at 100 Years (Repository Closure)	23
13	Peak Values of Temperature and Induced Stress for the Tuff Main Drift	24
14	Peak Values of Temperature and Induced Stress for Drift CE	25
15	Peak Values of Temperature and Induced Stress for Drift F'G'	26

LIST OF FIGURES

Figure		Page
1.	Sketch of the Tuff Repository at the Nevada Test Site (MacDougall, et al., 1987, Vol. 1, p. xii)	27
2.	Layout of the Exploratory Shaft Facility (Ehgartner, 1988)	28
3.	Cross Section Showing the Exploratory Shafts 1 and 2, the Calico Hills Drill Room, and the Upper Demonstration Breakout Room (Ehgartner, 1988)	29
4.	Plan View of the Calico Hills Drill Room and the Upper Demonstration Breakout Room (Ehgartner, 1988)	30
5.	Geometry of the Waste Panels (MacDougall, et al., 1987, Vol. 6, p. 89)	31
6.	Details of a Typical Waste Emplacement Panel - Vertical Emplacement Scheme (MacDougall, et al., 1987, Vol. 6, p. 95)	32
7.	Isometric and Profile Views of the Waste Emplacement Panels as Modelled with STRES3D	33
8.	Plan Views of the Waste Emplacement Panels as Modelled with STRES3D. The Locations of the Shafts and Drifts are Shown.	34
9.	Plan Views of the Waste Emplacement Panels as Modelled with STRES3D. The Location of the Exploratory Shaft Facility is Shown.	35
10.	Elevations of the Waste Emplacement Panels as Modelled with STRES3D	36
11.	Waste Emplacement Sequence Used in STRES3D Simulations - Number on Each Subpanel is the Emplacement Time in Years	37
12.	Integration Points Assigned to the Plate Heat Sources in the STRES3D Model	38
13.	Location of Coarse (200 ft by 200 ft) and Fine (50 ft by 50 ft) Surface Shear Elements Used in the STRES3D Simulations	39
14.	Integration Points Assigned to the Plate Heat Sources for Computation of the Surface Shear Strengths in the STRES3D Model	40

1.0 Introduction

This report describes a numerical study of the proposed nuclear waste repository at the Nevada Test Site. The objective of the study is to evaluate the temperatures and stresses at the Exploratory Shaft locations and in the vicinity of the Exploratory Shaft Facility area over a 10,000 year time span. The stresses change over time as a result of heat transfer from the waste to the surrounding rock mass. Of particular interest are the thermally-induced stresses in the vicinity of two shafts, the main drift, two mid-panel drifts, two breakout horizons, and the repository level exploratory test area. The stresses, strains, and temperatures for these eight structures have been computed with the STRES3D code (St. John and Christianson, 1980). The results are presented in graphical form for 10 different times: 10, 35, 50, 100, 300, 500, 1,000, 2,000, 5,000, and 10,000 years after waste emplacement has begun. The stresses and strains presented in this report are due solely to thermal loads. The influence of the shaft excavation and room excavation process upon the state of stress has not been considered; it is subject for another study.

2.0 Repository Geometry

The locations of the two shafts of interest are given in Figures 1 and 2. Exploratory Shaft 1 (ES-1) extends from the ground surface to a depth of 1450 ft, while Exploratory Shaft 2 (ES-2) extends from the ground surface to a depth of 1200 feet.

ES-1 intercepts all three rooms of concern: the Exploratory Shaft Facility, the Calico Hills Drill Room, and the Upper Demonstration Breakout Room. The geometry of these excavated areas is shown in Figures 2 through 4.

The Tuff Main Drift and Drift CE are part of the perimeter of the Exploratory Shaft Facility, while Drift F'G' intersects the perimeter. The locations of these drifts are given in Figure 2.

The repository contains 17 panels which will house the waste canisters (refer to Figures 5 and 6). Figure 6 shows a typical panel layout for a vertical emplacement scheme. The geometry for a horizontal emplacement scheme differs, but for this study, details of the emplacement geometry are not important so long as the average areal power density remains the same. The final emplacement scheme is yet to be chosen. In this study, all panels were

modeled as rectangular panels representing the heated area of each panel. The heated area is approximately 67 percent of the area shown in Figure 5. The reduction in area accounts for the standoff distance between the emplaced waste and the panel access drifts. The heated panels are each located at different depths relative to the surface, and have waste emplaced at different times. Figure 7 shows an isometric view and profile of the waste emplacement panels, Figure 8 the plan view of the panels, shafts and drifts, and Figure 9 the outline of the Exploratory Shaft Facility relative to the waste emplacement panel. Figure 10 shows the elevation of each panel.

3.0 Heat Generation From the Repository

At the time of emplacement, the average areal power density will be approximately 57 kw/acre over each of the 17 waste panels. If the standoff area between the drifts and the waste is taken into consideration, then the areal power density is approximately 85.0 kw/acre. The power generation will decay exponentially with time. The normalized coefficients describing the power decay are summarized in Table 1, and are those given by Mansure (1985) and the Reference Information Base. The waste emplacement will take place over a 25 year period. The emplacement schedule used in this study is that given in Figure 11. This schedule was taken from the *Site Characterization Plan Conceptual Design Report* (SCP/CDR), MacDougall et al. (1987) and Harig (1988).

4.0 Thermal and Mechanical Properties of the Repository

The temperatures and stresses due to the heat generation from the canisters depend on the thermal and mechanical properties of the repository. For the purposes of this study, the repository is assumed to be situated in a homogeneous, isotropic rock mass although the shaft penetrates eight different thermomechanical units. The thermal and mechanical properties assigned to the rock mass were specified in PDM 75-13 (Ehgartner, 1988), and are those given in Table 2; they are compatible with *The Nevada Nuclear Waste Isolation Project Reference Information Base* (RIB) values (Schelling, 1987). These correspond to the properties for the unit containing the Exploratory Shaft Facility. This unit is the non-lithophysae zone (the TWS2 unit) of the Topopah Springs Member.

5.0 Thermomechanical Analysis of the Repository

The heat transfer in the repository and the subsequent thermally-induced stresses were analyzed with the STRES3D code. The major assumptions inherent in the analyses are described in the following subsection of the STRES3D code.

5.1 STRES3D Code

STRES3D is a thermoelastic code for heat sources in a semi-infinite rock mass. The heat sources may have a constant strength or they decay exponentially. The heat sources may be point sources, line sources, and/or plate sources.

The STRES3D code is a semi-analytic model which was originally developed at the University of Minnesota (St. John and Christianson, 1980). The code was modified especially for the study described in this report. The major modifications are the inclusion of line and plate heat sources. Previously, only point heat sources were considered. The modifications are described in a letter report to Sandia National Laboratories (Asgian, 1988).

The STRES3D code utilizes the principle of superposition when computing the temperature distribution and state of stress. At a given time and location, the temperature is equal to the initial temperature plus the change in temperature caused by the heat sources. Similarly, the state of stress at a given time and location is equal to the initial state of stress plus the stress change induced by thermal expansion.

Input parameters include a description of the heat sources (source types, geometries, emplacement times, and decay coefficients) and the thermal and linear elastic properties of the rock mass. The location and size of special surface elements also must be specified. These elements ensure that there are no shear stresses on the ground surface.

Output parameters of STRES3D are the temperatures, displacements, and stresses at specified times and locations in the rock mass.

5.2 Initial and Boundary Conditions

The initial state of stress, which is assumed to exist in the repository, is that described in Table 3a. Initially, the major principal stress is vertical; the minor principal stresses are equal to 0.5 and 0.6 times the vertical stress. The ground surface is free of shear and normal stresses at all times.

The initial temperatures, which exist in the repository, are those given in Table 3b. Several temperature gradients exist; they reflect the differing thermal conductivities of the various rock layers. Although some differences in thermal conductivity exist, the conductivity is assumed to be homogeneous and isotropic for analysis purposes (refer to Section 4.0).

5.3 Numerical Discretization of the Repository

Each waste panel was presented by one or more plate heat sources in the STRES3D model. The effects of each plate source were computed using the third order Gauss-Legendre numerical integration procedure. This type of procedure makes use of 16 integration points per plate source. Thus, the number of integration points - and, in general, the accuracy of the solution - increases with the number of plates which represent each waste panel. However, the run time also increases linearly with the number of panels.

The panel discretization used to compute the influence on the waste of the shafts, the drifts, and the breakout areas is shown in Figure 12. A total of 130 plate elements were analyzed with 2080 integration points. In order to ensure that the ground surface was free of shear stress at all times, special surface elements were utilized. Without these elements, some of the surface shears would have approached 2.0 MPa. A rectangular grid of 80 by 120 surface elements was used; each element had a width of 200 feet. The centroid of these elements was located at the approximate centroid of the waste panels (x=764,000 ft, y=561,000 ft). Those surface elements lying above the Exploratory Shaft Facility were subdivided to provide more accurate results for the shafts and the ESF. The 44 by 44 fine surface elements are 50 ft wide and are centered about the point (x=765,900 ft, y=563,500 ft): refer to Figure 13. The relatively coarse panel discretization, shown in Figure 14, was used when computing the influence of the waste panels at the surface elements. This dual discretization scheme reduced the computational effort considerably from that required by just the fine discretization scheme.

5.4 Description of Thermomechanical Analyses

The thermally-induced stresses along the shafts, drifts, and excavations were analyzed for 10, 35, 50, 100, 300, 500, 1,000, 2,000, 5,000, and 10,000 years after waste emplacement begins. The initial and boundary conditions for the analyses are those described in the previous subsection. The properties assigned to the repository are given in Section 4.0. In the analyses, it was assumed that each panel has a uniform elevation and that the waste emplacement within each panel\sub-panel would take place instantaneously at the beginning of a year according to the schedule given in Figure 10.

5.5 Results of the Thermomechanical Analyses

The results of the thermomechanical analyses for the shafts, breakout areas, and drifts are discussed in this section. Detailed graphs and contour plots of temperatures, induced stresses, and induced strains are contained in the Appendices.

Exploratory Shaft 1 (ES-1) -- The influence of the heat sources on ES-1 is summarized in Tables 4 and 5, and in Appendix A. Figures A-1 through A-13 contain profiles of temperature, stress, and strain for the ten times of interest. The peak values of each of these parameters are given in Tables 4 and 5. The peak changes all occur after closure of the repository, i.e., after 100 years.

At the time the repository closes, the local maximum values of all three induced shear stresses, $\Delta\sigma_{xy}$, $\Delta\sigma_{yz}$ and $\Delta\sigma_{xz}$, are approximately one-half to two-thirds of the absolute maximum values. The absolute maximum values for these three shear stress are attained between 200 and 1900 years after the repository is scheduled to close. The resultant of two of the induced shear stresses, $\Delta\sigma_{yz}$ and $\Delta\sigma_{xz}$, is important for estimating stresses in the shaft liner. The maximum values of each time analyzed of this resultant stress are given in Table 5. At 100 years (repository closure), the maximum value of this resultant stress is 70 percent of the peak value for all times (0.43 MPa).

The induced axial normal stress, $\Delta\sigma_{zz}$, peaks at the same time as does the resultant shear stress, i.e., 300 years. At 300 years, $\Delta\sigma_{zz_{max}}$ is 2.2 MPa tension. At closure (100 years), the local maximum value of $\Delta\sigma_{zz}$ is 1.7 MPa tension, which equals 77 percent of the peak value.

While the induced axial normal stresses on ES-1 are tensile at all times, the induced horizontal normal stresses, $\Delta\sigma_{xx}$ and $\Delta\sigma_{yy}$, are compressive at all times for elevations less than 3500 feet. Both these induced normal stresses peak at 2000 years at approximately the same value: $\Delta\sigma_{xx_{max}}$ is 1.8 MPa and $\Delta\sigma_{yy_{max}}$ is 1.9 MPa.

The trends for the induced strains are approximately the same as the trends for the corresponding induced stresses. The profiles of strain generally have the same shape as do their counterparts in stress, i.e., the local maxima and minima generally occur at the same times and same elevations. The peak induced strains all occur between 300 and 2000 years. The maximum induced shear strain is 3.7×10^{-4} while the maximum induced axial normal strain is 1.8×10^{-4}. The induced normal strains, $\Delta\varepsilon_{xx}$ and $\Delta\varepsilon_{yy}$, attain maximum values of 1.0×10^{-4} and 1.3×10^{-4}, respectively. The maximum curvature (second derivative of horizontal displacement with respect to depth) at any time is $1.8 \times 10^{-6}\ m^{-1}$.

Exploratory Shaft 2 (ES-2) -- The results of the analyses for ES-2 are given in Tables 6 and 7 and in Figures A-14 through A-26. The temperatures and three of the six components of induced stress ($\Delta\sigma_{xx}$, $\Delta\sigma_{zz}$, and $\Delta\sigma_{xy}$) attain their maximum values at approximately the same times and same elevations as those for ES-1.

The peak values of all induced stresses except $\Delta\sigma_{yz}$ occur between 300 and 2000 years. The peak value of $\Delta\sigma_{yz}$ occurs when the repository is scheduled to close (100 years). At 100 years, the local maximum values of normal stress are between 36 and 97 percent of their absolute maximum values. The profiles of induced shear stress change shape considerably in the first hundred years. At very early times, the shear stress changes are due to the heat from Emplacement Panel 1, which is very close by; this is evident by the local maxima/minima for stresses $\Delta\sigma_{xy}$ and $\Delta\sigma_{xz}$, which occur above and below the elevation of Panel 1.

Although ES-2 is closer to Panel 1 than is ES-1, only half of the peak values of induced stress are more for ES-2 than for ES-1. The peak values of $\Delta\sigma_{yy}$, $\Delta\sigma_{yz}$, and $\Delta\sigma_{zz}$ for ES-2 are 110, 159, and 139 percent, respectively, of that for ES-1.

The profiles of induced shear and normal strain are very similar to the profiles of induced shear and normal stress, although the maximum strains do not necessarily occur at exactly the same time as the counterparts of maximum stress. All of the peak strains occur at or after 100 years (repository closure). The maximum curvation at any time is ~~1.8×10^{-3}~~ 1.9×10^{-6} m^{-1}.

Exploratory Shaft Facility (ESF) -- The ESF undergoes substantial changes in temperature and stress because of its close proximity to the waste panels. The peak changes in temperature and stress are summarized in Table 8. Contour plots of these parameters are presented in Appendix B for all ten times of interest.

At repository closure (100 years), the maximum temperature is 35.8°C in the facility. A maximum temperature of 51.1°C, occurs at 500 years. At this time, there is a temperature difference of 26°C between the southern and northern portions of the facility.

The peak value of induced horizontal normal stress, $\Delta\sigma_{xx}$ occurs at the same time as does the peak temperature (500 years), while the other horizontal normal stress, $\Delta\sigma_{yy}$, peaks earlier at 300 years. The induced vertical normal stress $\Delta\sigma_{zz}$, attains a maximum tensile value of 3.0 MPa at a much earlier time, 50 years after waste emplacement begins.

The maximum induced shear stresses all occur at 50 years. At this time, $|\Delta\sigma_{xy}|_{max}$ equals 1.32 MPa, $|\Delta\sigma_{yz}|_{max}$ equals 1.00, and $|\Delta\sigma_{zx}|_{max}$ equals 0.71. These peak stresses occur in the drifts at the perimeter of the facility, and they equal one and one-half to four times the peak induced shear stresses in the two shafts ES-1 and ES-2.

Calico Hills Drill Room (CA) -- Because the Calico Hills Drill Room is located further from the heat sources than is the Exploratory Shaft Facility, it undergoes much less change in temperature and stress. The temperature increases by at most 14°C to a maximum value of 33.5°C at 2000 years. For all the times under consideration, the temperature never varies by more than 1.2°C from one end of the facility to the other (refer to Figures C-1 through C-70).

The variation in stress over the facility is also very minor; the maximum difference in each component of stress is not more than 0.4 MPa at any given time.

The changes in normal stress, $\Delta\sigma_{xx}$, $\Delta\sigma_{yy}$ and $\Delta\sigma_{zz}$, all peak at 2000 years at values of 1.8, 1.8, and -1.9 MPa, respectively. The three components of induced shear stress, $\Delta\sigma_{xy}$, $\Delta\sigma_{yz}$ and $\Delta\sigma_{xz}$, all peak at 300 and 500 years to values of 0.5, 0.5, and 0.1 MPa, respectively. At repository closure (100 years) the induced stresses are 71 percent or less of their peak values (refer to Tables 9 and 10).

Upper Demonstration Breakout Room (BR) -- The changes in temperature and stress in the Upper Demonstration Breakout Room, in general, are similar to those in the Calico Hills Drill Room, and they are considerably less than those in the Exploratory Shaft Facility. The maximum changes are summarized in Table 11. Contour plots of these parameters are presented in Figures C-1 through C-70.

The stresses and temperatures in the room are fairly uniform at all times. At any instant in time, the maximum difference in temperature in the room is at most 1.8°C, while the maximum difference in a given component of stress is 0.6 MPa.

The peak changes in both temperature and stress occur at times of 300 years or greater. When the repository is due to close (100 years), the induced stresses are 82 percent or less of their maximum values (refer to Tables 11 and 12).

Drifts -- Mid-panel drifts, CE and F'G', and the Tuff Main Drift are in relatively close proximity to the heat sources and, consequently, undergo much larger changes in stress than do shafts ES-1 and ES-2. Profile plots of temperature and induced stress for the three drifts are given in Appendix D. The maximum values of the temperatures and of each component of stress are given in Tables 13 through 15.

The maximum changes in temperature and stress all occur at relatively early times, 500 years or less. For each of the three drifts, the maximum vertical normal stress and the maximum shear stress $\Delta\sigma_{x'y'}$, occur prior to or just at repository closure (100 years). The large changes in vertical normal stress (-2.6 MPa or greater in tension) in combination with the large changes (6 MPa or greater in compression) in horizontal stress acting on the drifts' springlines can cause considerable bending moments in the drift liners.

A detailed study of the influence of the heat sources on the drift stability is the subject of future work to be done for Sandia National Laboratories under PDM 75-15.

6.0 Conclusions and Recommendations

The temperatures and stresses induced by emplacement of the heat-generating waste in the proposed nuclear waste repository at Yucca Mountain have been analyzed with the STRES3D code. Maximum changes in temperature, stress, and strain for two shafts, Exploratory Shaft 1 (ES-1) and Exploratory Shaft 2 (ES-2), have been presented in tabular and graphical form. The axial stresses in the shafts are reduced by at most 2.2 MPa, whereas the horizontal normal stresses, σ_{xx}, and σ_{yy}, acting on the shafts are increased by as much as 2.1 MPa. The shear stresses acting on horizontal cross sections of the shafts are increased by as much as 0.65 MPa. Some portions of the Exploratory Shaft Facility are subjected to even greater changes in stress because of their close proximity to the waste. The other two breakout areas, the Calico Hills Drill Room and the Upper Demonstration Breakout Room, undergo much less severe changes in stress because they are located further from the heat sources. Although the complex three- dimensional nature of the heat sources has been taken into consideration, the results can only be taken as approximate because the variation in thermal and mechanical properties with depth was not considered. The results are more accurate in those horizons with characteristics similar to those utilized in the STRES3D model, i.e., they are most accurate in the central portion of the horizon containing the Exploratory Shaft Facility. The predicted results are least accurate at the interfaces between different thermomechanical units, and in the central portion of units where the values of the product of the thermal expansion coefficient and the elastic modulus differ substantially from those assumed in the model. It is recommended that the variation in thermomechanical properties on the induced thermal stresses be investigated in a future study.

7.0 References

Ehgartner, B. L. to J. F. T. Agapito & Associates, Inc., "3-D Far-Field Analysis for the Exploratory Shaft Facility" (Albuquerque: Sandia National Laboratories, January 15, 1988). Letter with Problem Definition Memo (PDM 75-13).

Harig, R. F. to Sandia National Laboratories, "Area Allocations for Waste Emplacement Based on the SCP/CDR Design" (San Francisco: Parsons Brinckerhoff, March 11, 1988). Letter.

Asgian, M. I., Documentation and Verification of STRES3D (Version 2.0) (Grand Junction, Colorado: J. F. T. Agapito & Associates, Inc., May 29, 1988). Draft report submitted to Sandia.

MacDougall, H. R., L. W. Scully and J. R. Tillerson, Site Characterization Plan Conceptual Design Report (Volumes 1, 2, and 6) (Albuquerque: Sandia National Laboratories, September, 1987). Report No. SAND84-2641, prepared for the U. S. Department of Energy under Contract DE-AC04-76DP00789 for the Nevada Nuclear Waste Storage Investigations Project.

Mansure, A. J. to R. Hill, "Allowable Thermal Loading as a Function of Waste Age" (Albuquerque: Sandia National Laboratories, February 13, 1985). Letter report.

St. John, C. M. and M. Christianson, A Computer Program for Determining Temperatures, Stresses, and Displacements Around Single or Arrays of Constant or Decaying Heat Sources - User's Guide and Manual (Richland, Washington: Rockwell Hanford Operations, September, 1980). Report No. RHO-BWI-C-78, submitted to Rockwell Hanford Operations by the University of Minnesota for U. S. Department of Energy Contract No. DE-AC06-77RL01030.

Schelling, F. J. (compiler), The Nevada Nuclear Waste Isolation Project Reference Information Base (Version 3.001) (Albuquerque: Sandia National Laboratories, December, 1987).

Table 1a

Heat Generation from Waste Canisters*
0-500 Years after Emplacement

Waste Component	Proportion of Normalized Strength (dimensionless) a_i	Time Exponent (years) b_i
1	0.031162	0.0013539
2	0.13925	0.019142
3	0.046911	0.051888
4	0.78267	0.43768

* Average Power Density APD = 57 kw/acre

Power Intensifier** PI = 1.49

Power at time t (years) after emplacement is given by P = APD *PI $\sum_{i=1}^{4} a_i e^{-b_i(t+8.55)}$

** Power Intensifier = [Panel Area/(Panel Area - Standoff Area - Mid-panel Pillar Area - Mid-panel Drift Area)]

Table 1b

Heat Generation from Waste Canisters*
500-10,000 Years after Emplacement

Waste Component	Proportion of Normalized Strength (dimensionless) a_i	Time Exponent (years) b_i
1	0.0019287	0.000028283
2	0.0028953	0.00012949
3	0.026765	0.0017590
4	0.14517	0.019999
5	0.038510	0.062594
6	0.78473	0.44460

* Average Power Density APD = 57 kw/acre

Power Intensifier** PI = 1.49

Power at time t (years) after emplacement is given by P = APD *PI $\sum_{i=1}^{4} a_i e^{-b_i(t+8.55)}$

** Power Intensifier = [Panel Area/(Panel Area - Standoff Area - Mid-panel Pillar Area - Mid-panel Drift Area)]

Table 2a

Thermal Properties of Repository Site

Saturated thermal capacitance (J/m^3-C)	2.16E + 6
Saturated thermal conductivity (W/m-C)	1.84

Table 2b

Mechanical Properties of Repository Site

Young's modulus (GPa)	15.2
Poisson's ratio	0.22
Coefficient of thermal expansion in the range of 25-200°C (m/m°C)	8.8 E-6

Table 3a

Initial Stress State

In-situ vertical stress at 1000 ft (MPa)	7.0
Ratio of minimum horizontal to vertical stress	.5
Ratio of maximum horizontal to vertical stress	.6
Bearing of minimum horizontal stre.	N57°W
Bearing c ˜ maximum horizontal stress	N33°E

Table 3b

Initial Temperatures

Surface temperature (°C)	12.7
Temperature at 76.2 m (°C)	20.3
In-situ thermal gradient 76.2 - 152.4 m (°C/m)	0.0197
In-situ thermal gradient 152.4 - 304.8 m (°C/m)	0.0164
In-situ thermal gradient 304.8 - 457.2 m (°C/m)	0.0205
In-situ thermal gradient 457.2 - 609.6 m (°C/m)	0.0295

Table 4

Peak Values of Temperature, Stress, and Strain for Exploratory Shaft 1 (ES-1)

Parameter	Peak Value	Elevation (ft)	Time of Occurrence (yrs)
Temperature	33.5°C	2550	5000
$\Delta\sigma_{xx}$	+1.78 MPa	2975	2000
$\Delta\sigma_{yy}$	+1.89 MPa	2975	2000
$\Delta\sigma_{zz}$	-2.22 MPa	3075	300
$\lvert\Delta\sigma_{xy}\rvert$	0.57 MPa	3150	300
$\lvert\Delta\sigma_{yz}\rvert$	0.41 MPa	3000	300
$\lvert\Delta\sigma_{xz}\rvert$	0.23 MPa	3475	2000
$\Delta\varepsilon_{xx}$	9.99×10^{-5}	2975	2000
$\Delta\varepsilon_{yy}$	1.34×10^{-4}	3125	500
$\Delta\varepsilon_{zz}$	-1.79×10^{-4}	3075	500
$\lvert\varepsilon_{xy}\rvert$	9.19×10^{-5}	3150	300
$\lvert\varepsilon_{yz}\rvert$	6.62×10^{-5}	3000	300
$\lvert\varepsilon_{xz}\rvert$	3.66×10^{-4}	3475	2000

Table 5

Exploratory Shaft 1: Maximum Shear Stress Acting on a Horizontal Plane*

Time (yrs)	Maximum Shear Stress (MPa)
10	0.06
35	0.16
50	0.19
100	0.30
300	0.43
500	0.41
1,000	0.32
2,000	0.30
5,000	0.31
10,000	0.26

* *Resultant of* $\Delta\sigma_{yz}$ and $\Delta\sigma_{xz}$

Table 6

Peak Values of Temperature, Stress, and Strain for Exploratory Shaft 2 (ES-2)

Parameter	Peak Value	Elevation (ft)	Time of Occurrence (yrs)
Temperature	32.4°C	2550	5000
$\Delta\sigma_{xx}$	1.65 MPa	2975	2000
$\Delta\sigma_{yy}$	2.08 MPa	3050	500
$\Delta\sigma_{zz}$	1.61 MPa	3050	300
$\lvert\Delta\sigma_{xy}\rvert$	0.34 MPa	3175	300
$\lvert\Delta\sigma_{yz}\rvert$	0.65 MPa	3275	100
$\lvert\Delta\sigma_{xz}\rvert$	0.32 MPa	3525	500
$\Delta\varepsilon_{xx}$	9.12×10^{-4}	3025	500
$\Delta\varepsilon_{yy}$	1.36×10^{-4}	3050 3075	500
$\Delta\varepsilon_{zz}$	-1.50×10^{-4}	3050	300
$\lvert\varepsilon_{xy}\rvert$	5.52×10^{-5}	2925	300
$\lvert\varepsilon_{yz}\rvert$	1.04×10^{-4}	3275	100
$\lvert\varepsilon_{xz}\rvert$	5.10×10^{-5}	3525	500

Table 7

Exploratory Shaft 2: Maximum Shear Stress Acting on a Horizontal Plane

Time (yrs)	Maximum Shear Stress (MPa)
10	0.13
35	0.40
50	0.50
100	0.65
300	0.63
500	0.54
1,000	0.32
2,000	0.31
5,000	0.24
10,000	0.30

Table 8

Peak Values of Temperature and Stress for the Exploratory Shaft Facility

Parameter	Value	Time of Occurrence (yrs)
Temperature	51.1°C	500
$\Delta\sigma_{xx}$	4.63 MPa	500
$\Delta\sigma_{yy}$	5.37 MPa	300
$\Delta\sigma_{zz}$	-3.03 MPa	50
$\lvert\Delta\sigma_{xy}\rvert$	1.32 MPa	50
$\lvert\Delta\sigma_{yz}\rvert$	1.00 MPa	50
$\lvert\Delta\sigma_{xz}\rvert$	0.71 MPa	50

Table 9

Peak Values of Temperature and Stress for the Calico Hills Drill Room

Parameter	Value	Time of Occurrence (yrs)
Temperature	33.54°C	2000
$\Delta\sigma_{xx}$	1.79 MPa	2000
$\Delta\sigma_{yy}$	1.79 MPa	2000
$\Delta\sigma_{zz}$	-1.94 MPa	300
$\lvert\Delta\sigma_{xy}\rvert$	0.46 MPa	300, 500
$\lvert\Delta\sigma_{yz}\rvert$	0.52 MPa	300, 500, 1000
$\lvert\Delta\sigma_{zx}\rvert$	0.14 MPa	300, 500

Table 10

Maximum Values of Temperatures and Stress in the Calico Hills Drill Room at 100 Years (Repository Closure)

Parameters	Maximum Value at 100 Years
Temperature	20.00°C
$\Delta\sigma_{xx}$	0.20 MPa
$\Delta\sigma_{yy}$	0.53 MPa
$\Delta\sigma_{zz}$	-1.35 MPa
$\lvert\Delta\sigma_{xy}\rvert$	0.29 MPa
$\lvert\Delta\sigma_{yz}\rvert$	0.32 MPa
$\lvert\Delta\sigma_{xz}\rvert$	0.10 MPa

Table 11

Peak Values of Temperature and Stress for the Upper Demonstration Breakout Room

Parameter	Value	Time of Occurrence (yrs)
Temperature	27.05°C	2000
$\Delta\sigma_{xx}$	1.71 MPa	2000
$\Delta\sigma_{yy}$	1.29 MPa	500
$\Delta\sigma_{zz}$	-1.47 MPa	300
$\lvert\Delta\sigma_{xy}\rvert$	0.52 MPa	300
$\lvert\Delta\sigma_{yz}\rvert$	0.38 MPa	300
$\lvert\Delta\sigma_{xz}\rvert$	0.26 MPa	500, 2000

Table 12

Maximum Values of Temperatures and Stress in the Upper Demonstration Breakout Room at 100 Years (Repository Closure)

Parameters	Maximum Value at 100 Years
Temperature	15.66°C
$\Delta\sigma_{xx}$	0.08 MPa
$\Delta\sigma_{yy}$	0.41 MPa
$\Delta\sigma_{zz}$	-1.08 MPa
$\lvert\Delta\sigma_{xy}\rvert$	0.38 MPa
$\lvert\Delta\sigma_{yz}\rvert$	0.31 MPa
$\lvert\Delta\sigma_{zx}\rvert$	0.15 MPa

Table 13

Peak Values of Temperature and Induced Stress for the Tuff Main Drift

Parameter	Value	Time of Occurrence (yrs)
Temperature	50.33°C	500
$\Delta\sigma_{z'z'}$ *	6.14 MPa	500
$\Delta\sigma_{y'y'}$	4.26 MPa	500
$\Delta\sigma_{z'x'}$	-3.52 MPa	100
$\Delta\sigma_{x'y'}$	1.21 MPa	100

* *Refer to Figure D-16 for Local Coordinate System x', y', z' and for Stress Sign Conventions*

Table 14

Peak Values of Temperature and Induced Stress for Drift CE

Parameter	Value	Time of Occurrence (yrs)
Temperature	58.89°C	300
$\Delta\sigma_{x'x'}$ *	8.70 MPa	100
$\Delta\sigma_{y'y'}$	4.43 MPa	300
$\Delta\sigma_{z'z'}$	-2.64 MPa	35
$\lvert\Delta\sigma_{x'y'}\rvert$	0.96 MPa	50

* *Refer to Figure D-16 for Local Coordinate System x', y', z' and for Stress Sign Conventions*

Table 15

Peak Values of Temperature and Induced Stress for Drift F'G'

Parameter	Value	Time of Occurrence (yrs)
Temperature	75.67°C	300
$\Delta\sigma_{x'x'}$ *	10.37 MPa	100
$\Delta\sigma_{y'y'}$	7.82 MPa	300
$\Delta\sigma_{z'z'}$	-3.62 MPa	50
$\lvert\Delta\sigma_{x'y'}\rvert$	0.85 MPa	50

* *Refer to Figure D-16 for Local Coordinate System x', y', z' and for Stress Sign Conventions*

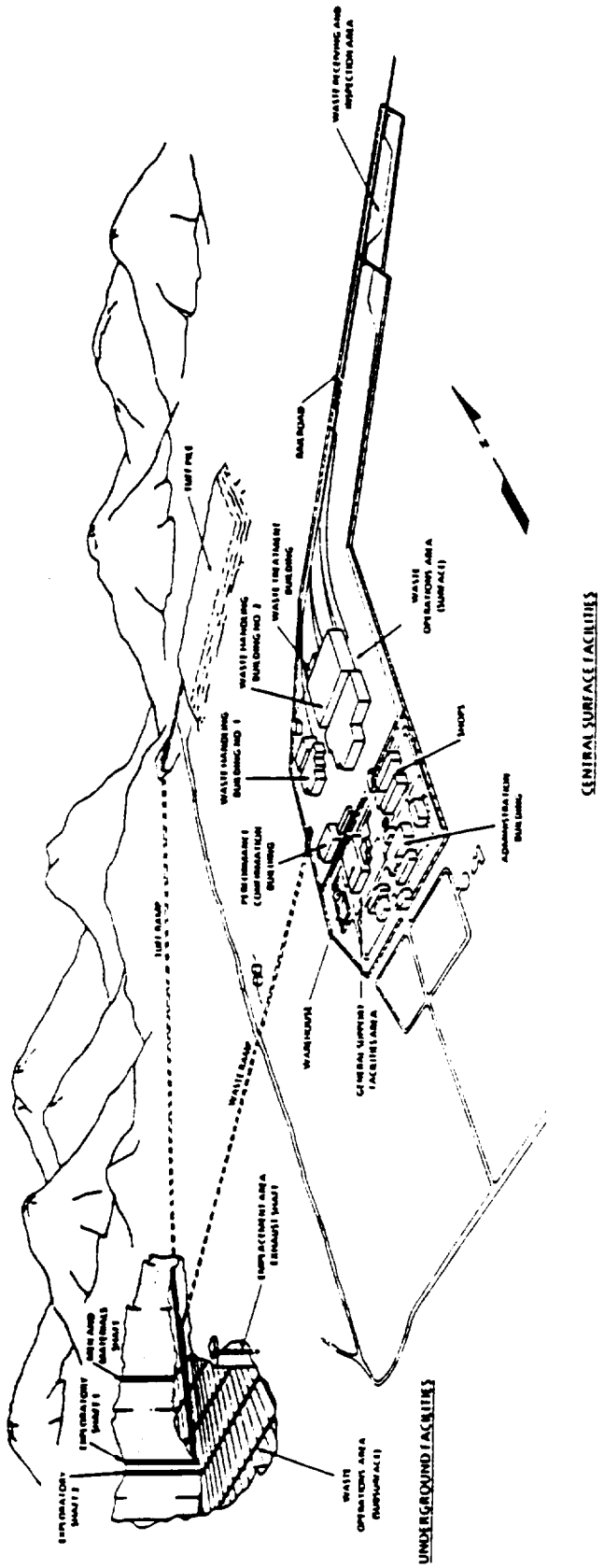

Figure 1. Sketch of the Tuff Repository at the Nevada Test Site (MacDougall, et al., 1987, Vol. 1, p. xii)

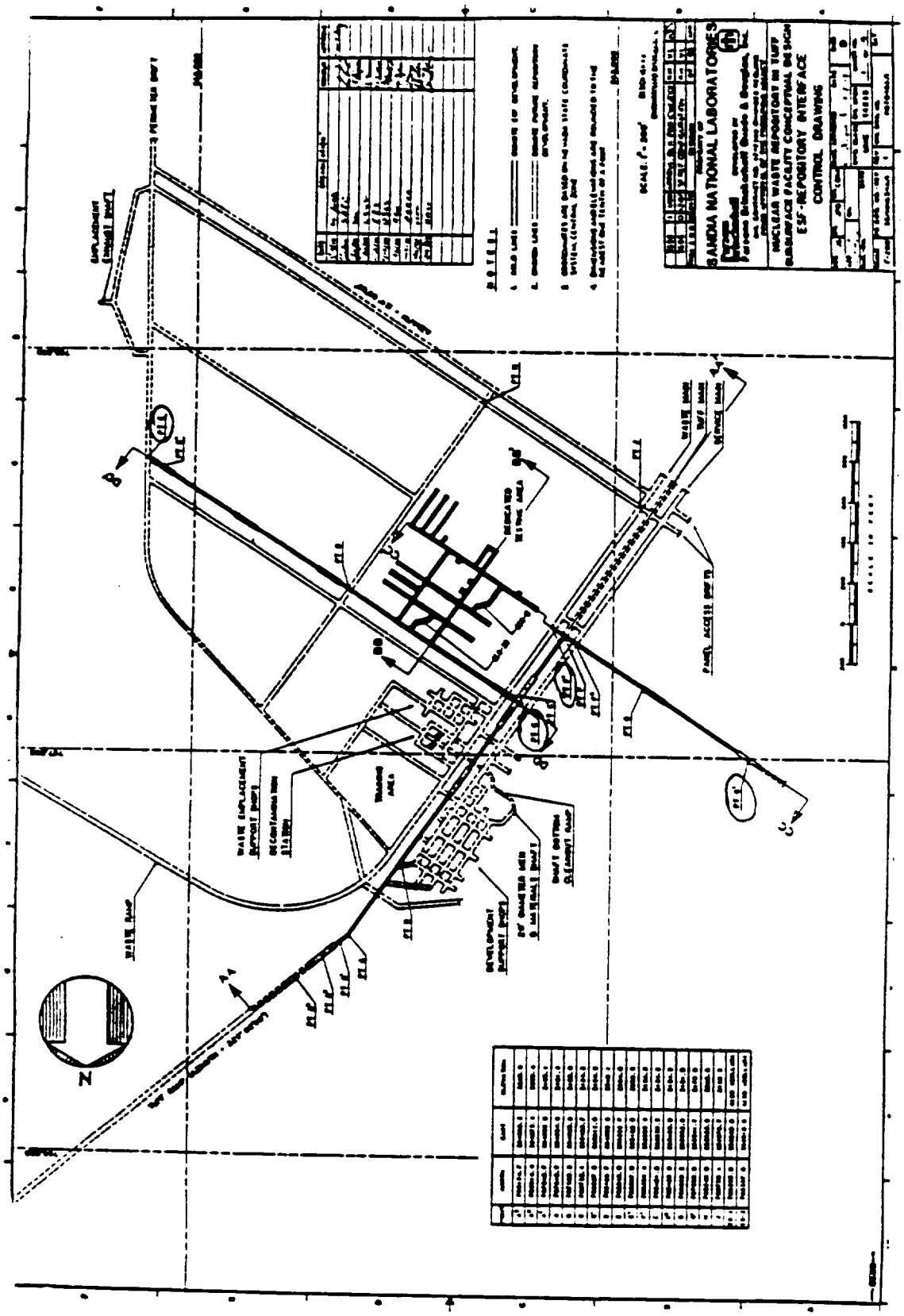

Figure 2. Layout of the Exploratory Shaft Facility (Ehgartner, 1988)

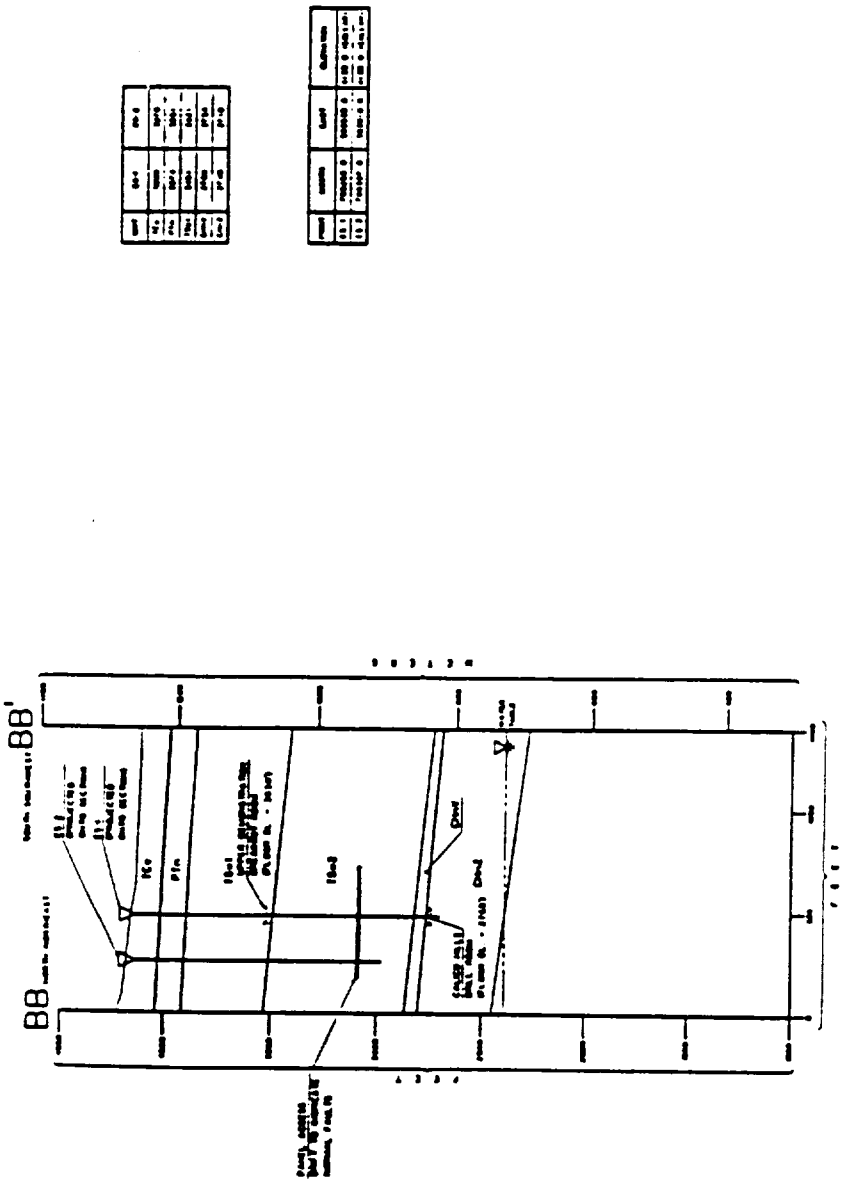

Figure 3. Cross Section Showing the Exploratory Shafts 1 and 2, the Calico Hills Drill Room, and the Upper Demonstration Breakout Room (Ehgartner, 1988)

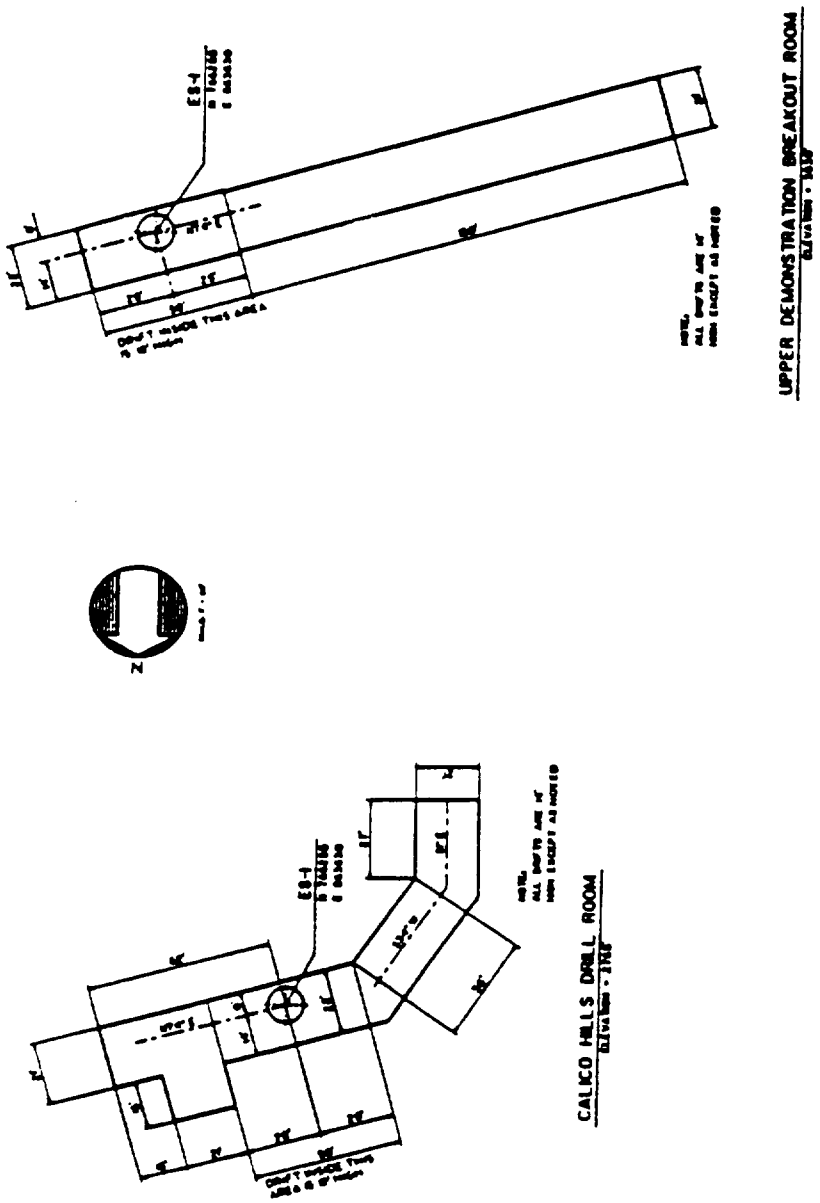

Figure 4. Plan View of the Calico Hills Drill Room and the Upper Demonstration Breakout Room (Ehgartner, 1988)

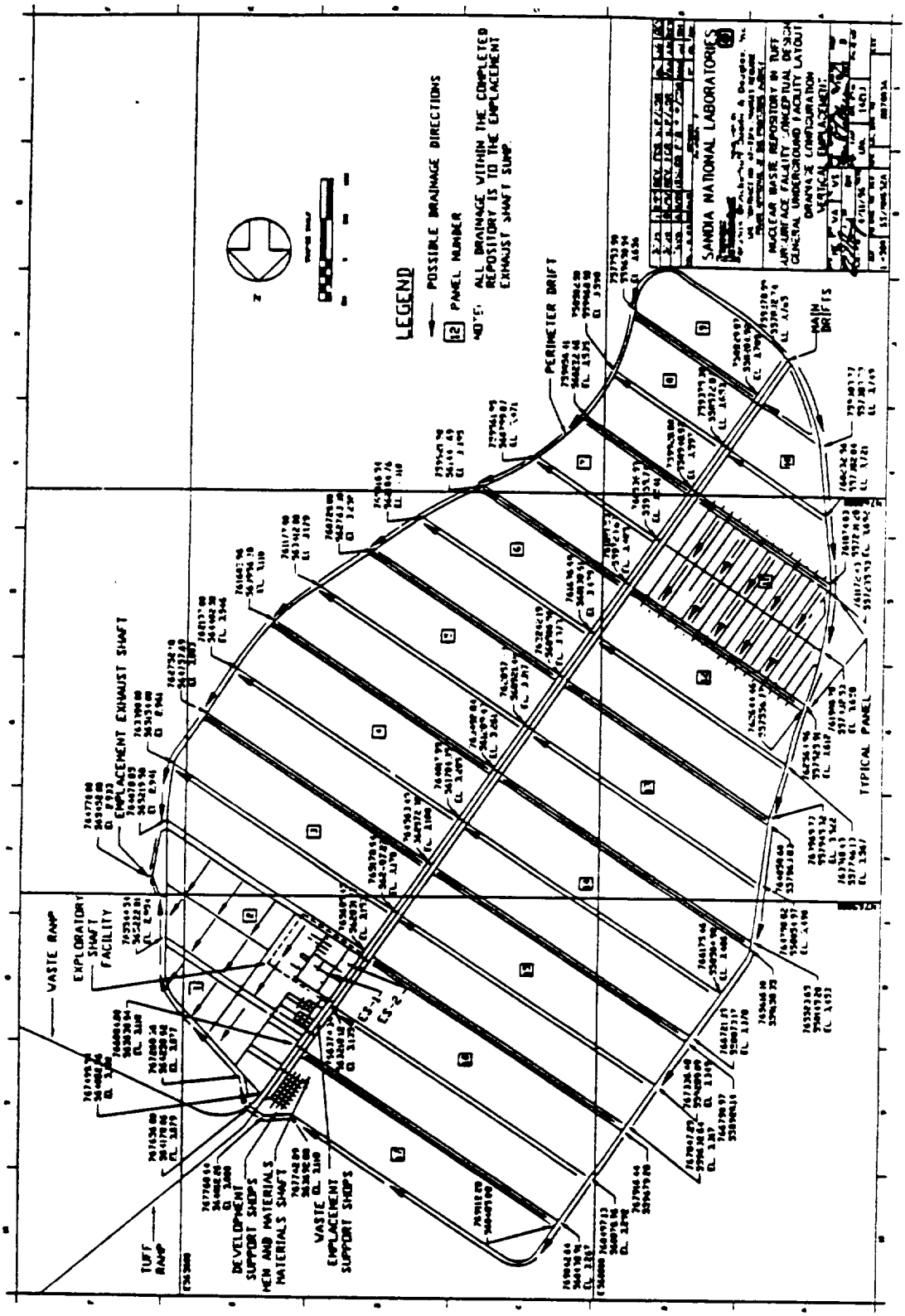

Figure 5. Geometry of the Waste Panels (MacDougall, et al., 1987, Vol. 6, p. 89)

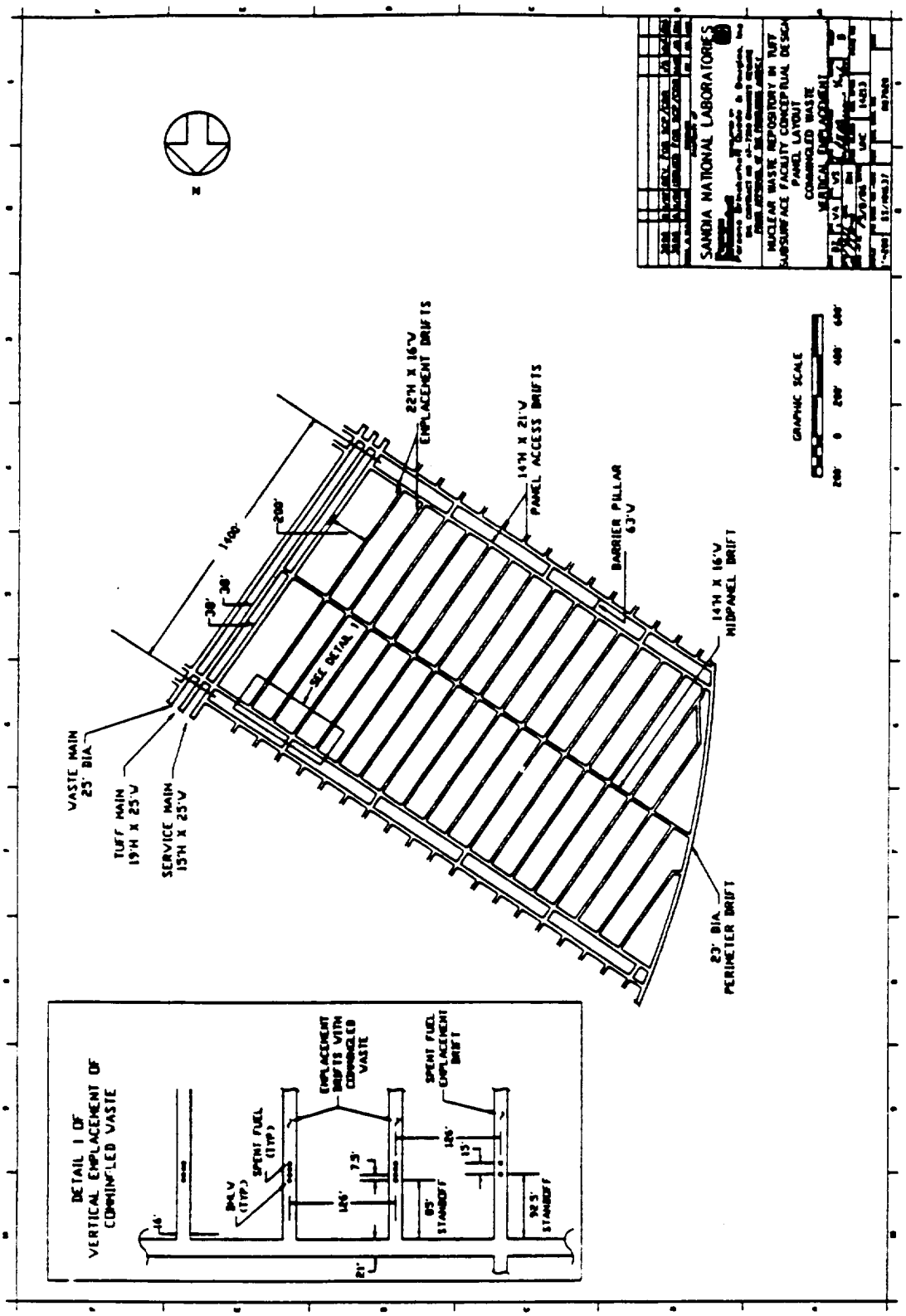

Figure 6. Details of a Typical Waste Emplacement Panel - Vertical Emplacement Scheme (MacDougall, et al., 1987, Vol. 6, p. 95)

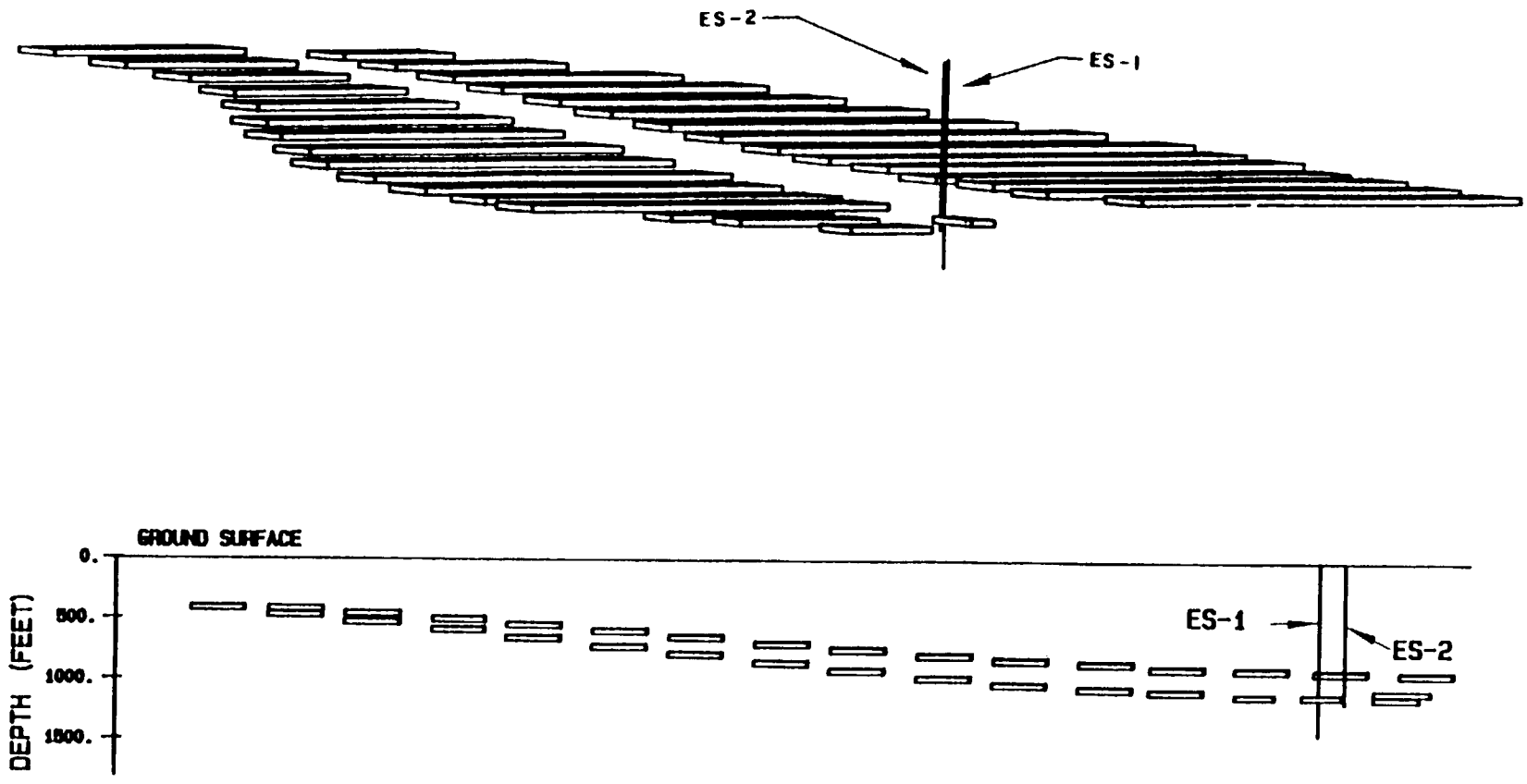

Figure 7. Isometric and Profile Views of the Waste Emplacement Panels as Modelled with STRES3D

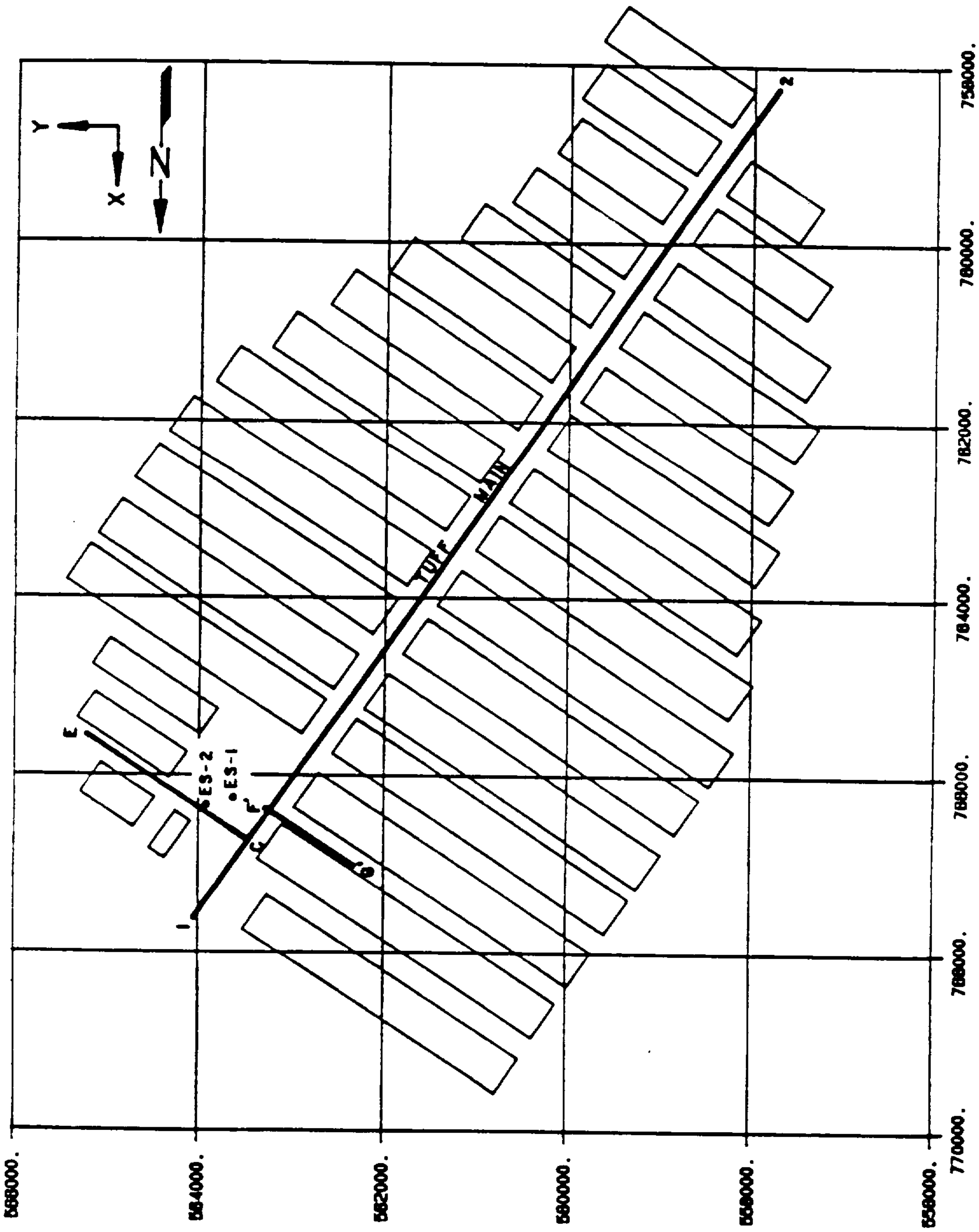

Figure 8. Plan Views of the Waste Emplacement Panels as Modelled with STRES3D. The Locations of the Shafts and Drifts are Shown.

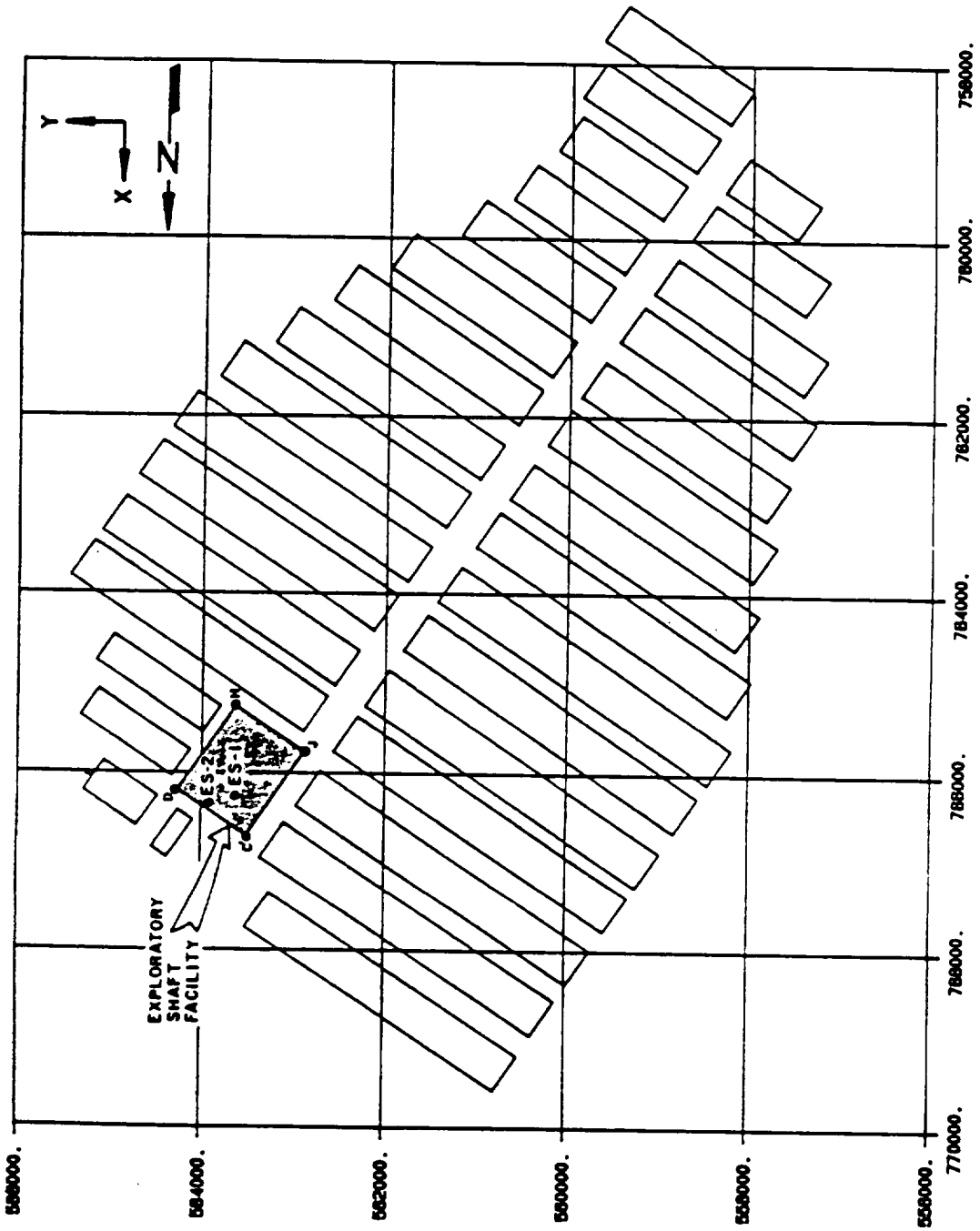

Figure 9. Plan Views of the Waste Emplacement Panels as Modelled with STRES3D. The Location of the Exploratory Shaft Facility is Shown.

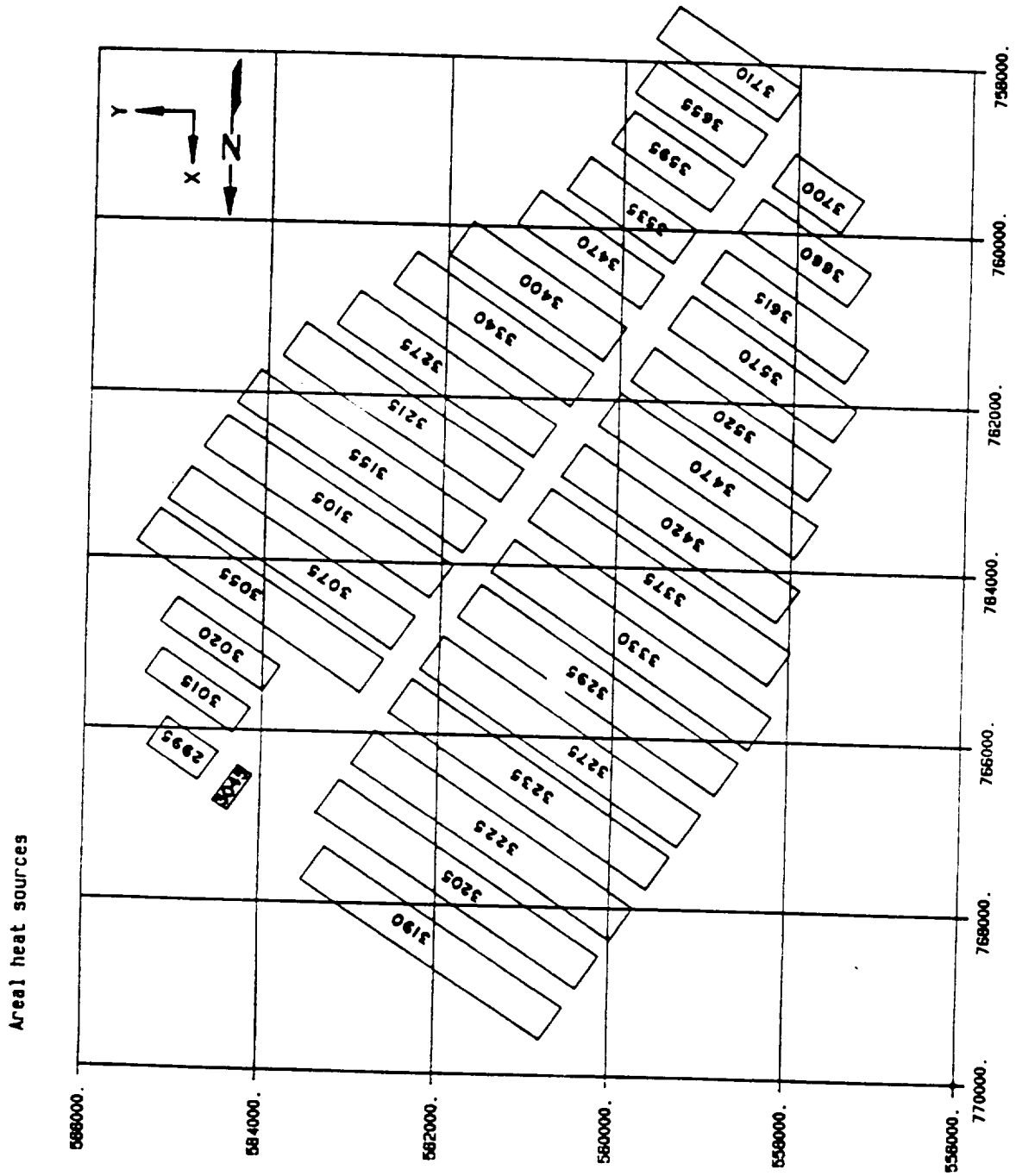

Figure 10. Elevations of the Waste Emplacement Panels as Modelled with STRES3D.

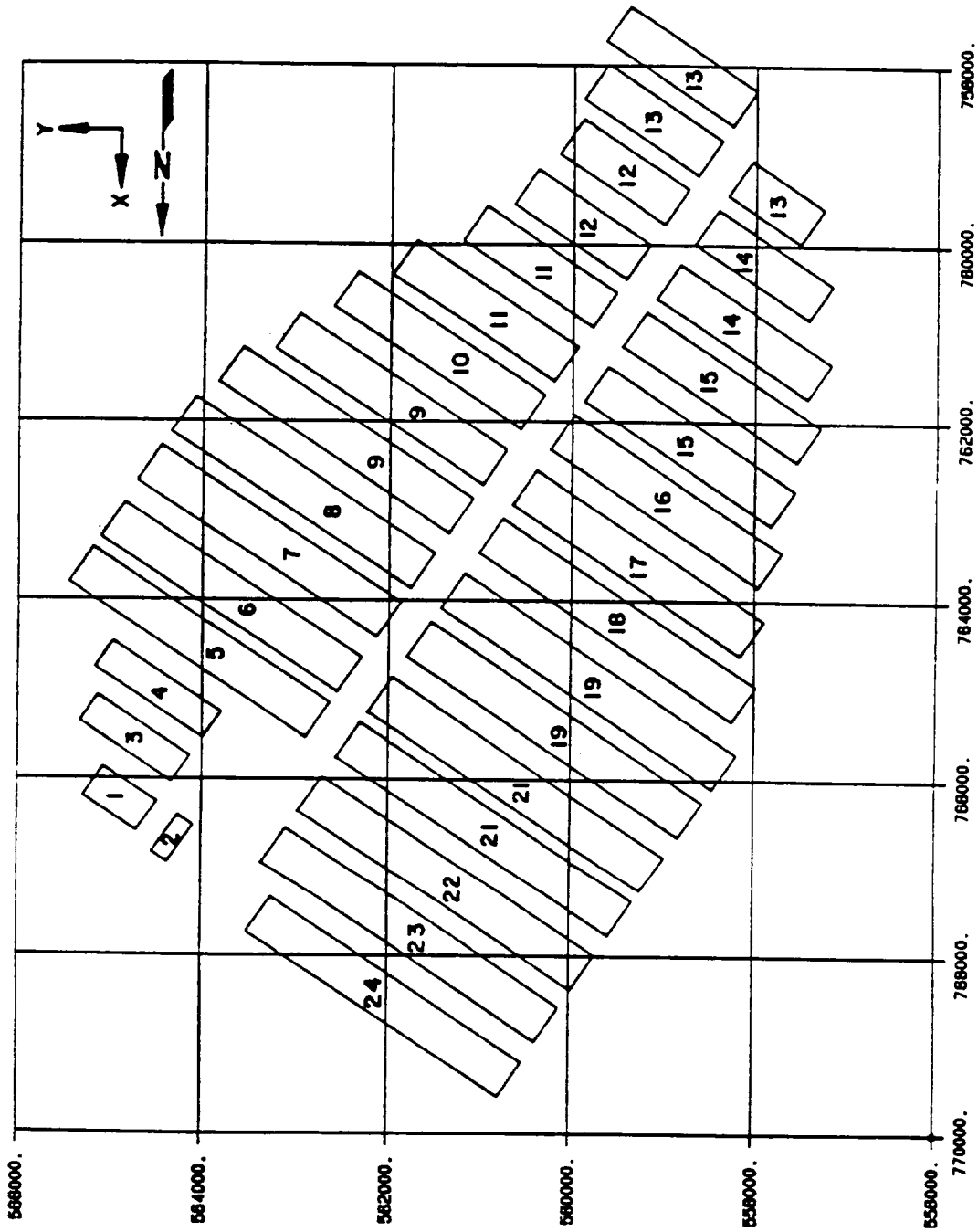

Figure 11. Waste Emplacement Sequence Used in STRES3D Simulations - Number on Each Subpanel is the Emplacement Time in Years

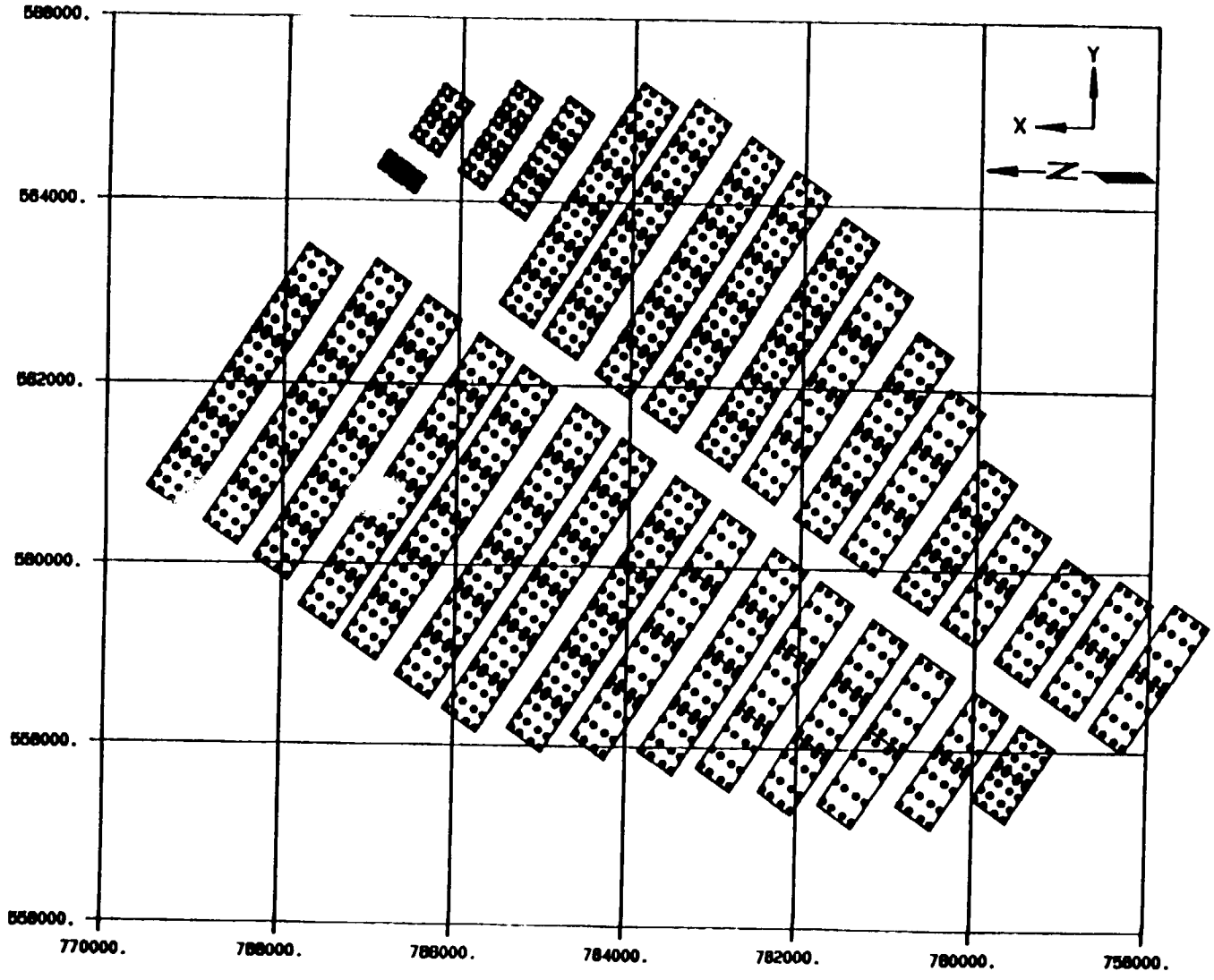

Figure 12. Integration Points Assigned to the Plate Heat Sources in the STRES3D Model

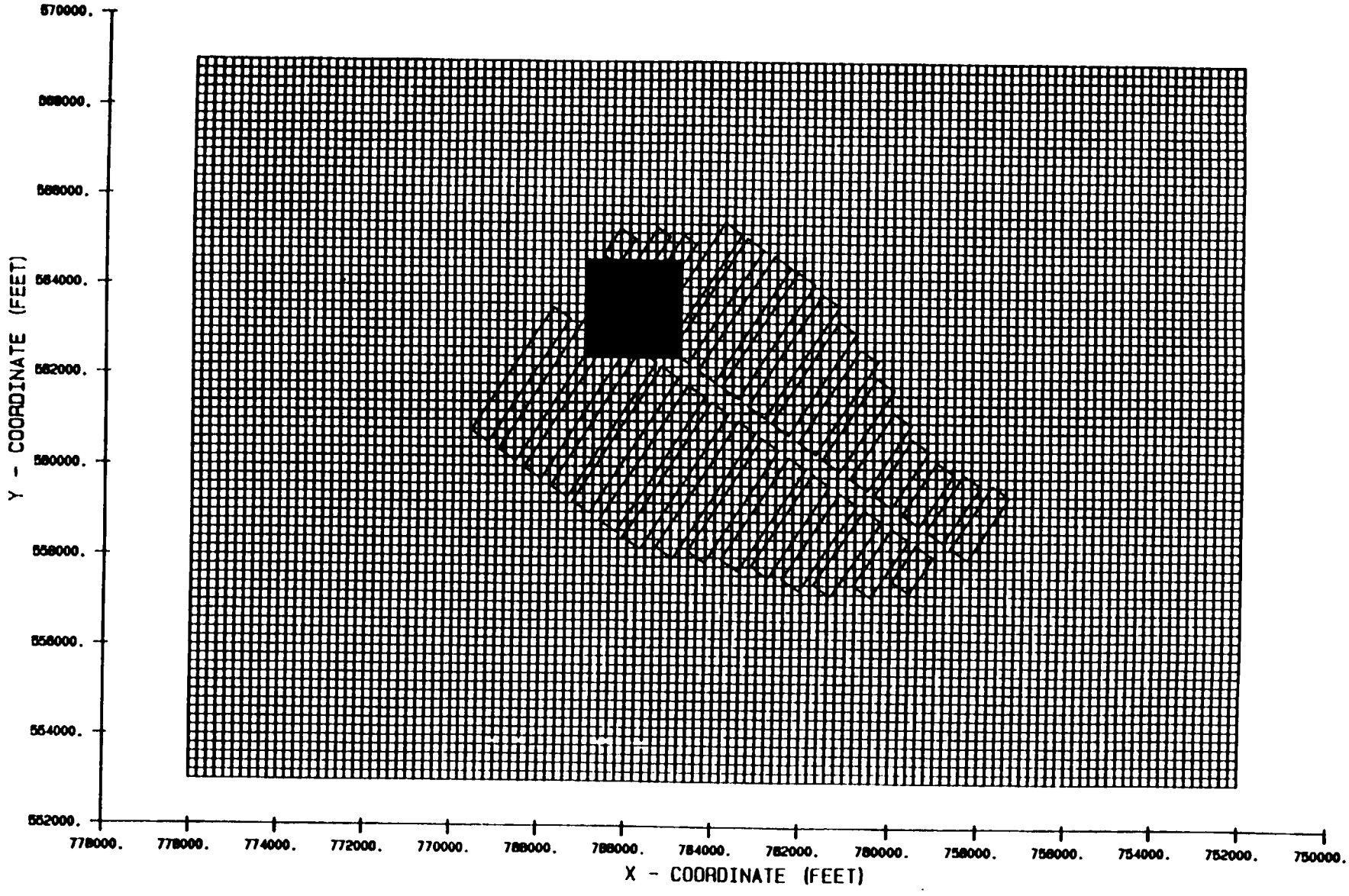

Figure 13. Location of Coarse (200 ft by 200 ft) and Fine (50 ft by 50 ft) Surface Shear Elements Used in the STRES3D Simulations

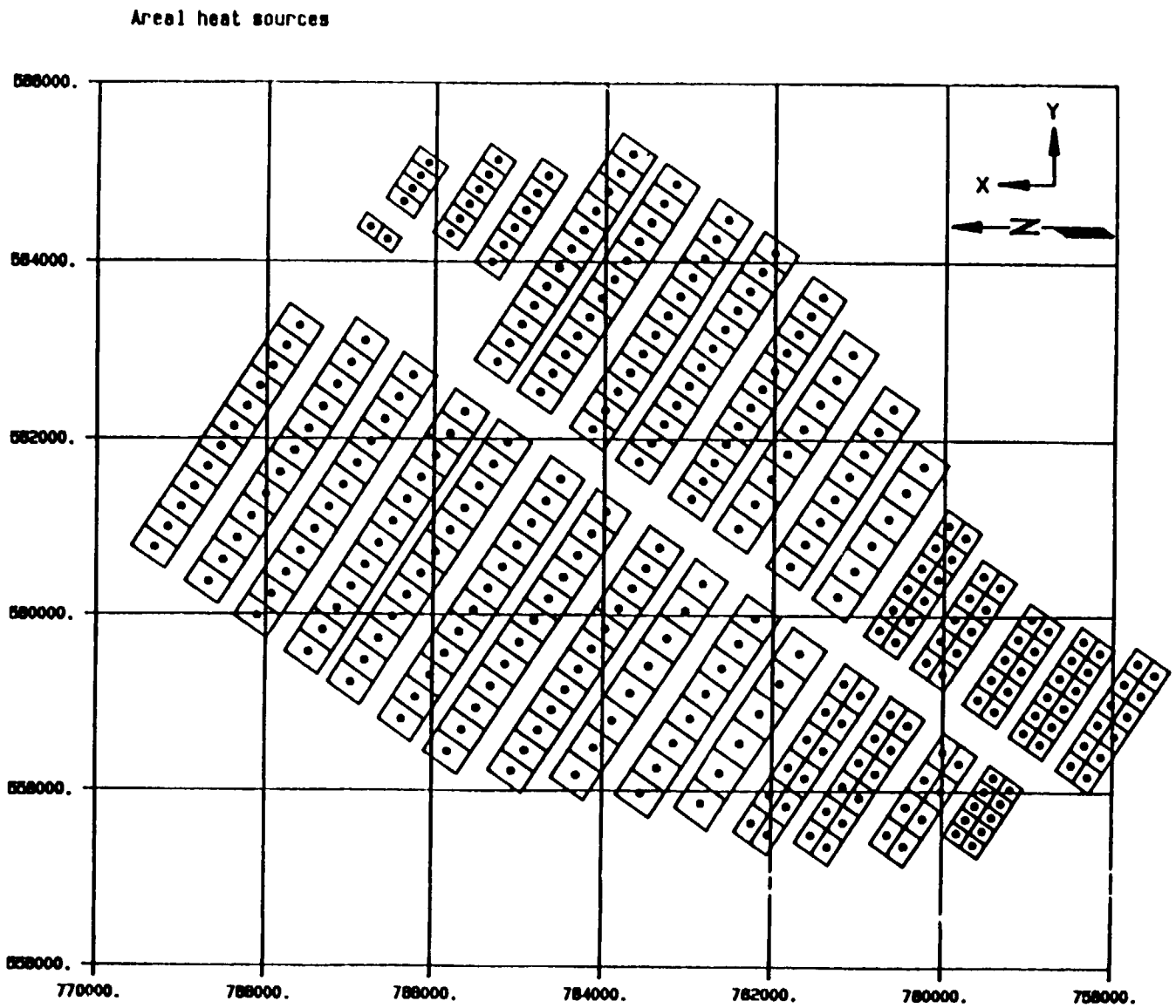

Figure 14. Integration Points Assigned to the Plate Heat Sources for Computation of the Surface Shear Strengths in the STRES3D Model

APPENDIX A

Temperatures and Induced Stresses ($\Delta\sigma_{xx}, \Delta\sigma_{yy}, \Delta\sigma_{zz}, \Delta\sigma_{xy}, \Delta\sigma_{yz}, \Delta\sigma_{xz}$) and Induced Strains ($\Delta\varepsilon_{xx}, \Delta\varepsilon_{yy}, \Delta\varepsilon_{zz}, \Delta\varepsilon_{xy}, \Delta\varepsilon_{yz}, \Delta\varepsilon_{xz}$) for 10 to 10,000 Years After Waste Emplacement Begins

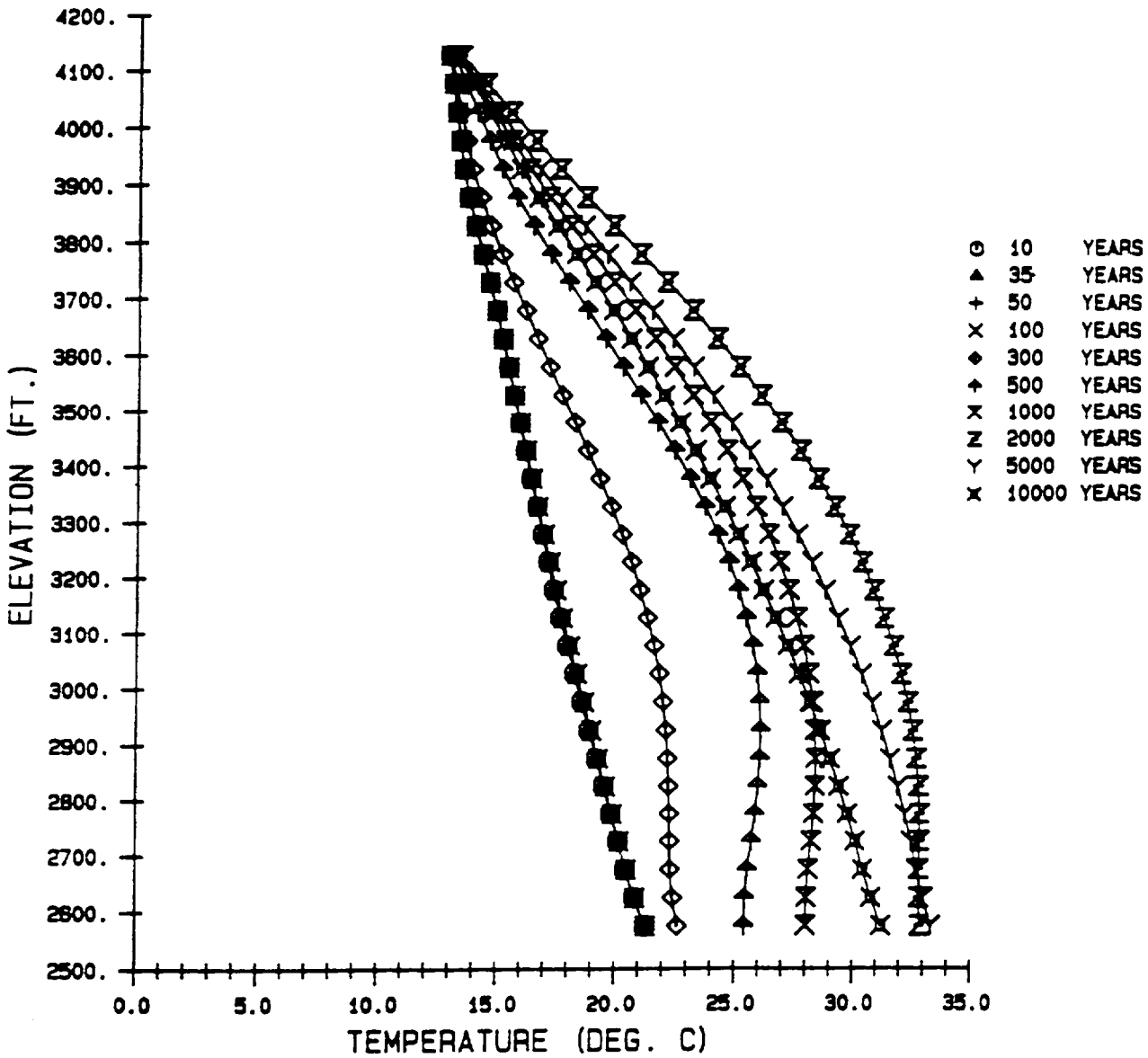

Figure A-1. Exploratory Shaft 1: Temperature Histories for 10 to 10,000 Years After Waste Emplacement Begins

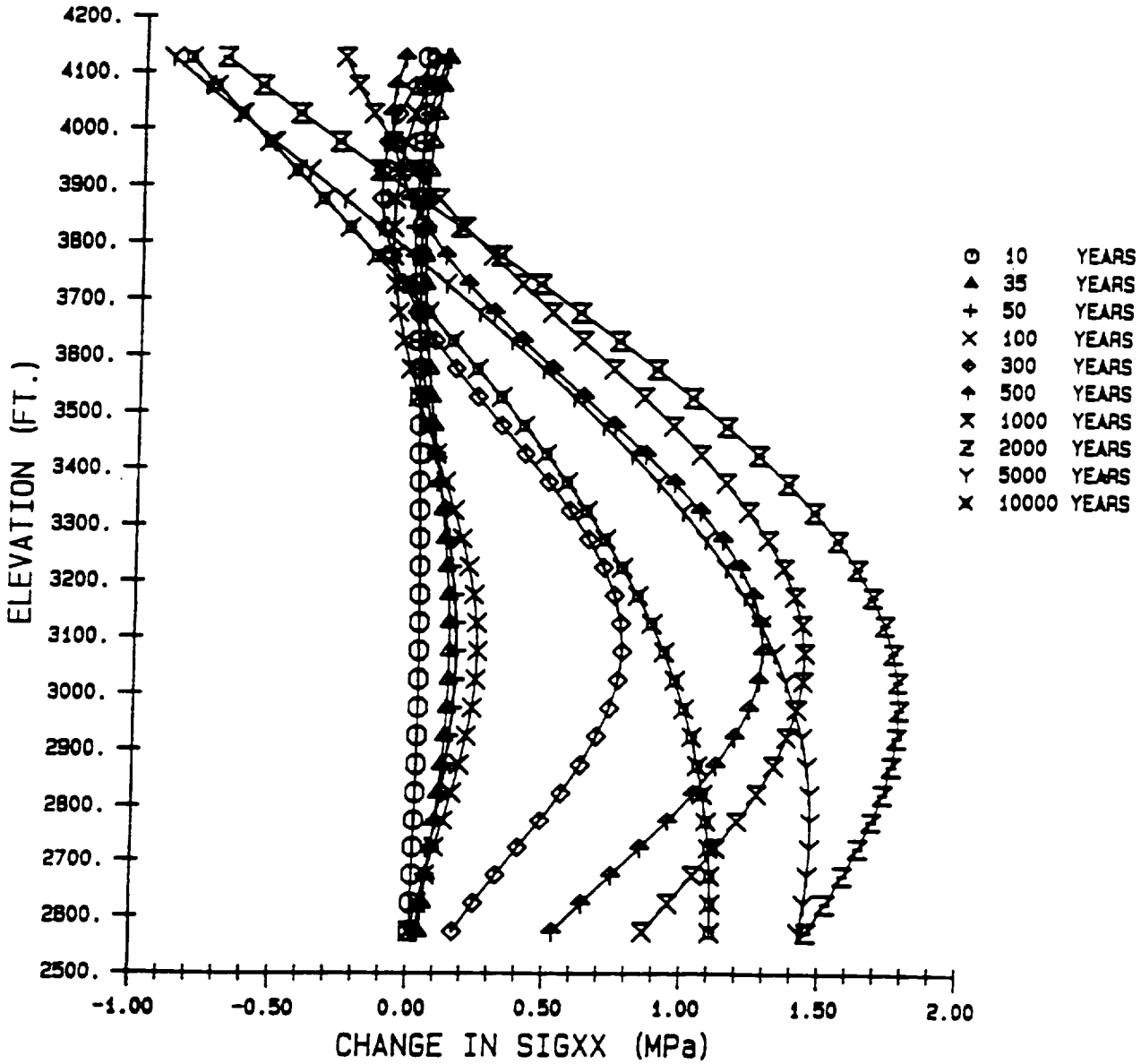

Figure A-2. Exploratory Shaft 1: Changes in Normal Stress σ_{xx} for 10 to 10,000 Years After Waste Emplacement Begins

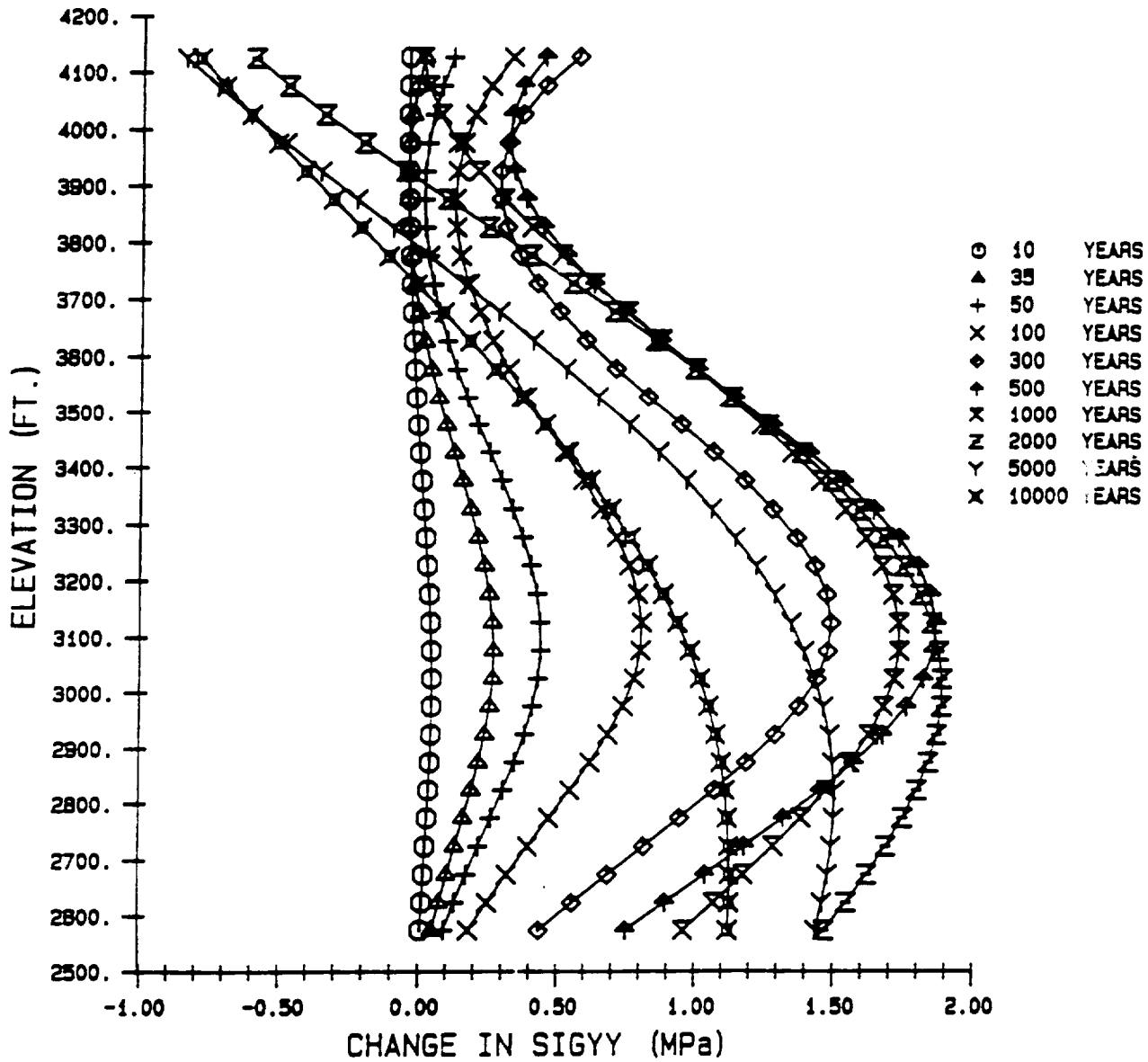

Figure A-3. Exploratory Shaft 1: Changes in Normal Stress σ_{yy} for 10 to 10,000 Years After Waste Emplacement Begins

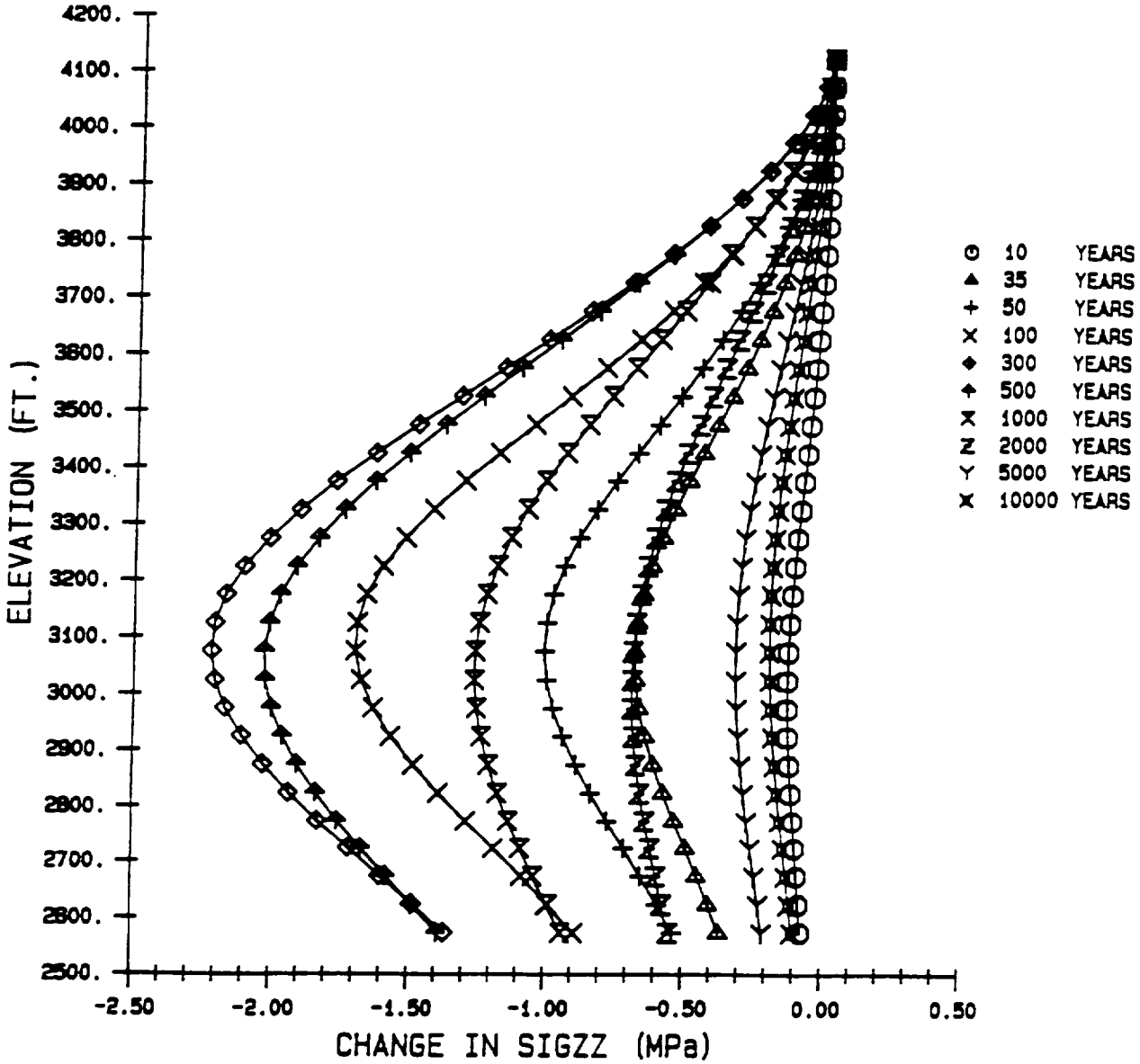

Figure A-4. Exploratory Shaft 1: Changes in Normal Stress σ_{zz} for 10 to 10,000 Years After Waste Emplacement Begins

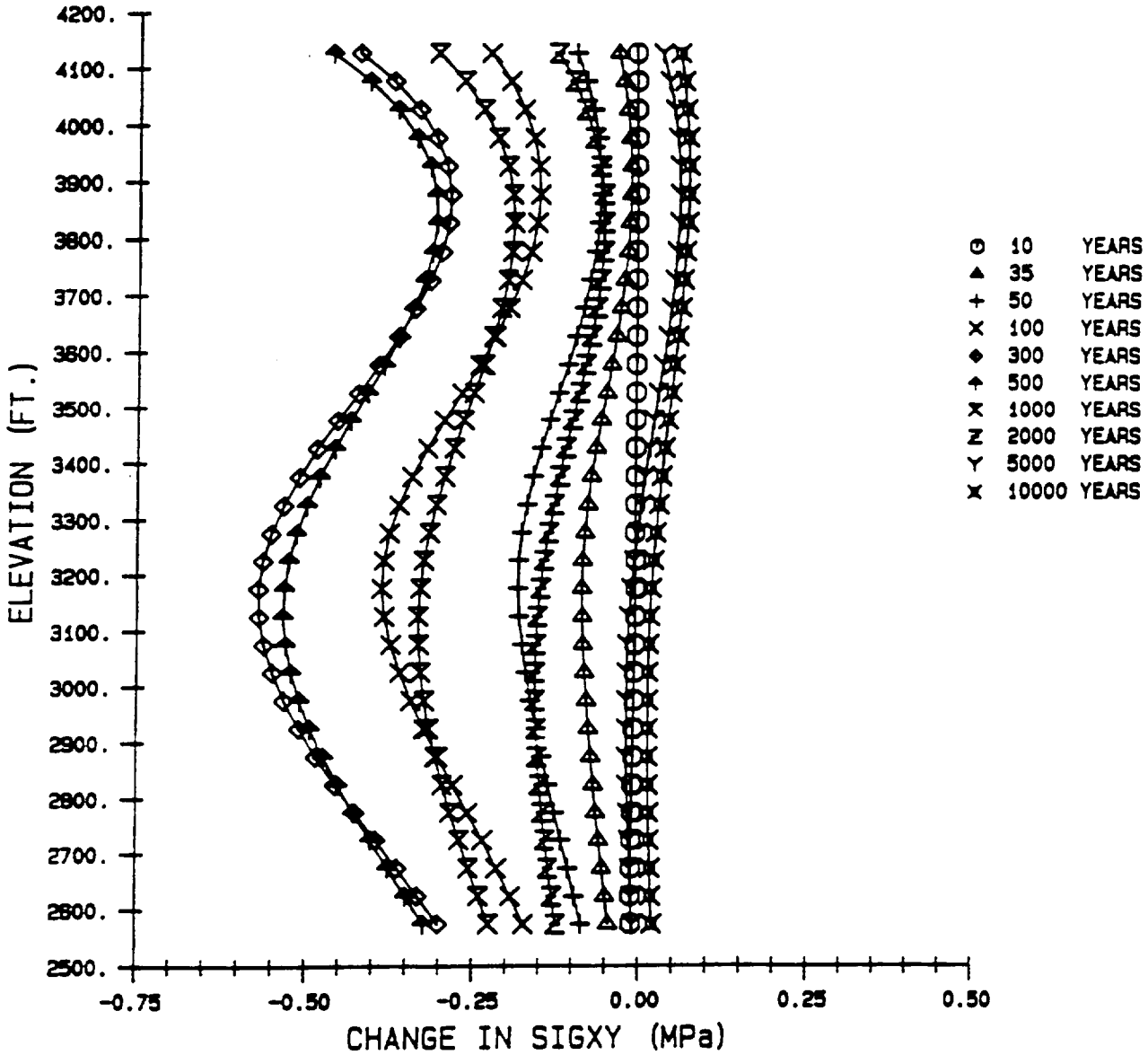

Figure A-5. Exploratory Shaft 1: Changes in Shear Stress σ_{xy} for 10 to 10,000 Years After Waste Emplacement Begins

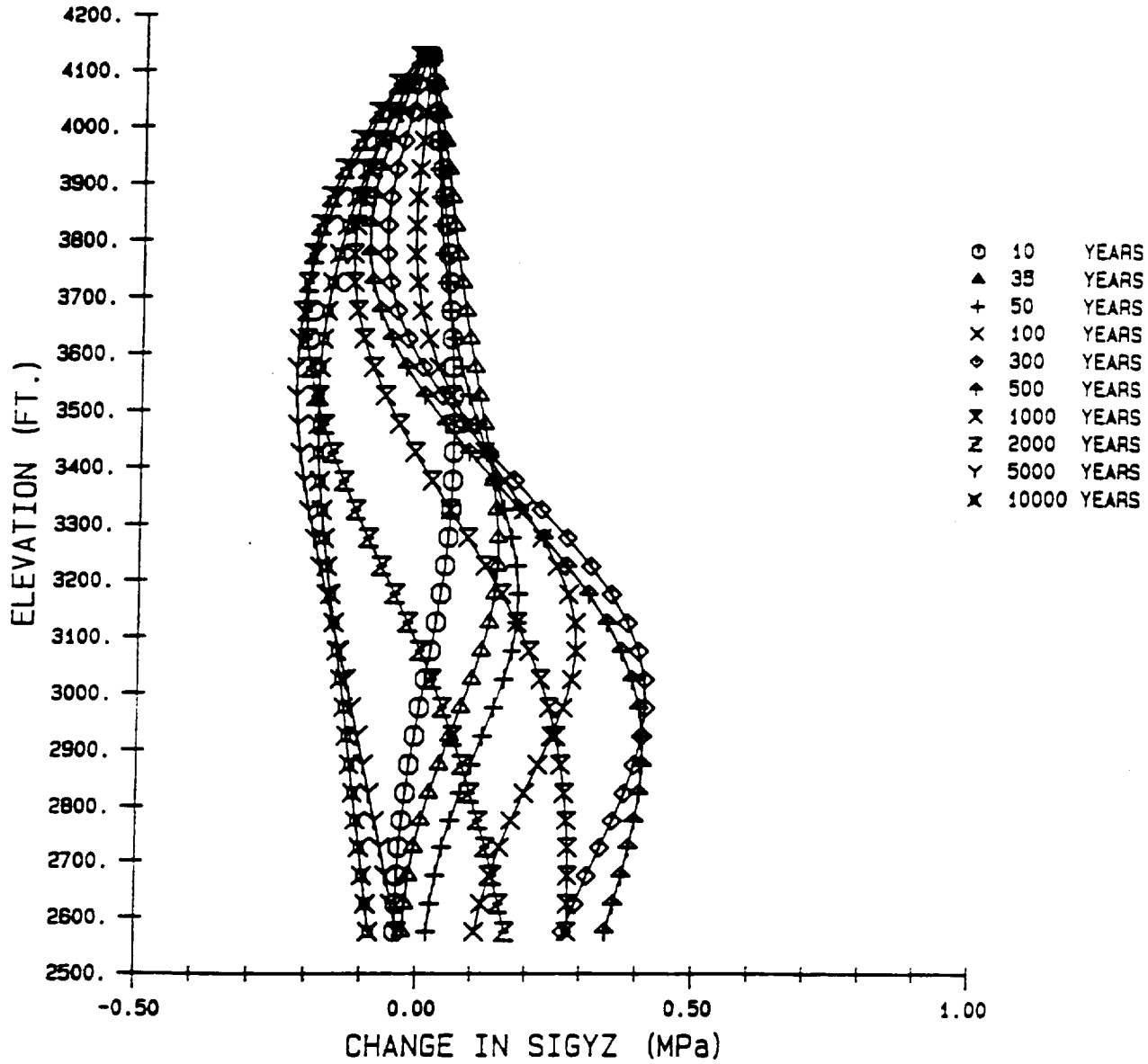

Figure A-6. Exploratory Shaft 1: Changes in Shear Stress σ_{yz} for 10 to 10,000 Years After Waste Emplacement Begins

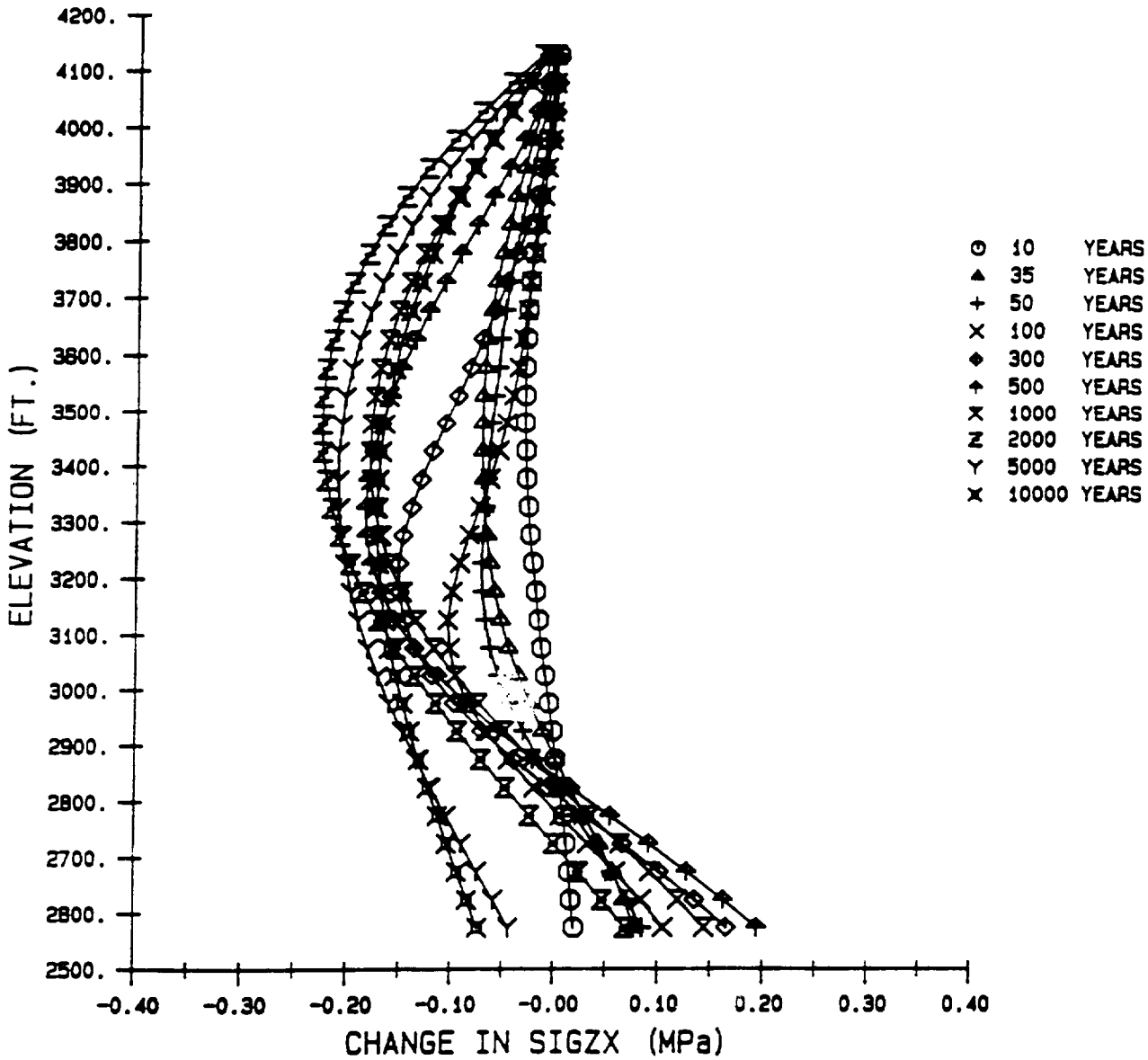

Figure A-7. Exploratory Shaft 1: Changes in Shear Stress σ_{zx} for 10 to 10,000 Years After Waste Emplacement Begins

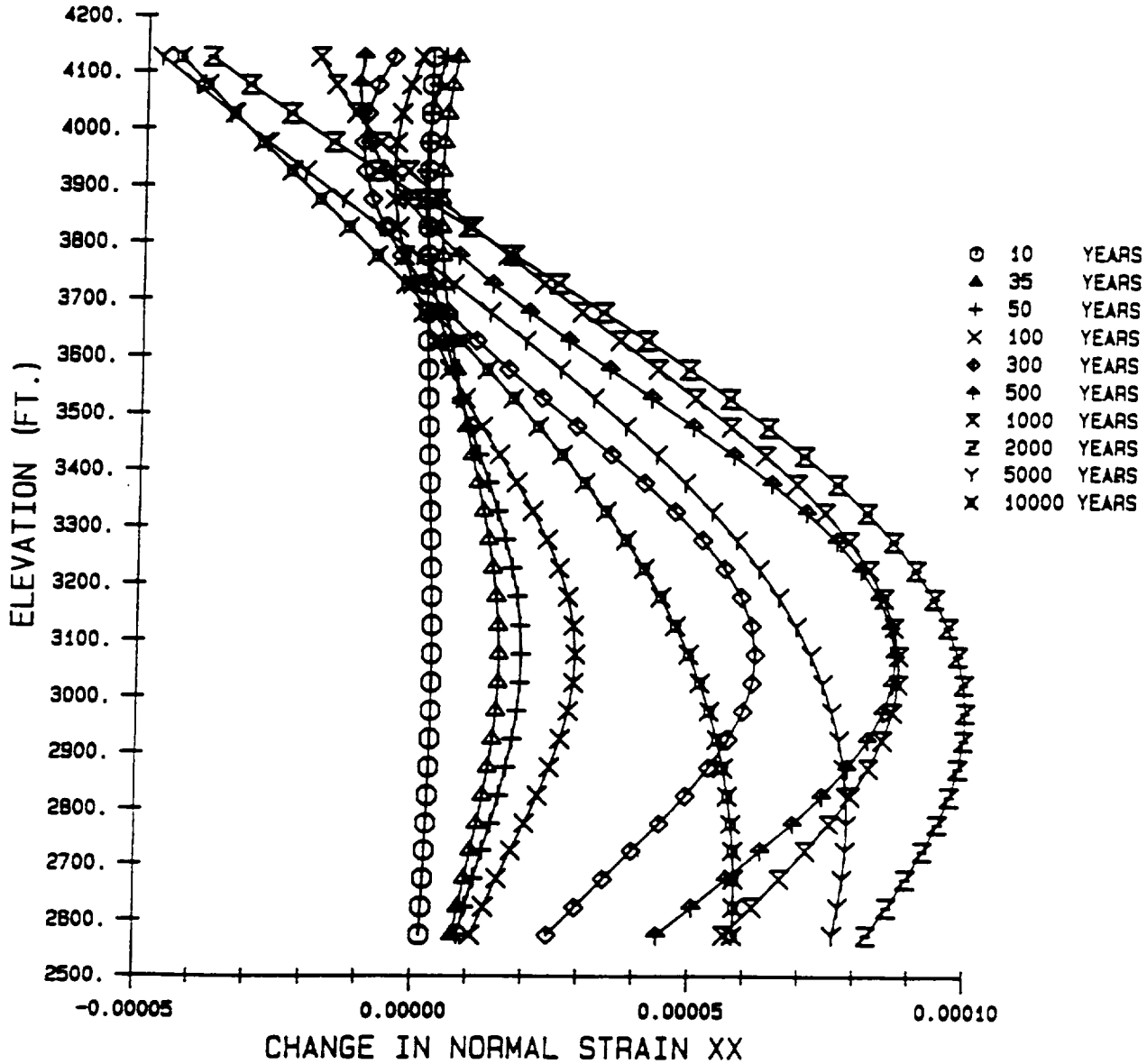

Figure A-8. Exploratory Shaft 1: Changes in Normal Strain ε_{xx} for 10 to 10,000 Years After Waste Emplacement Begins

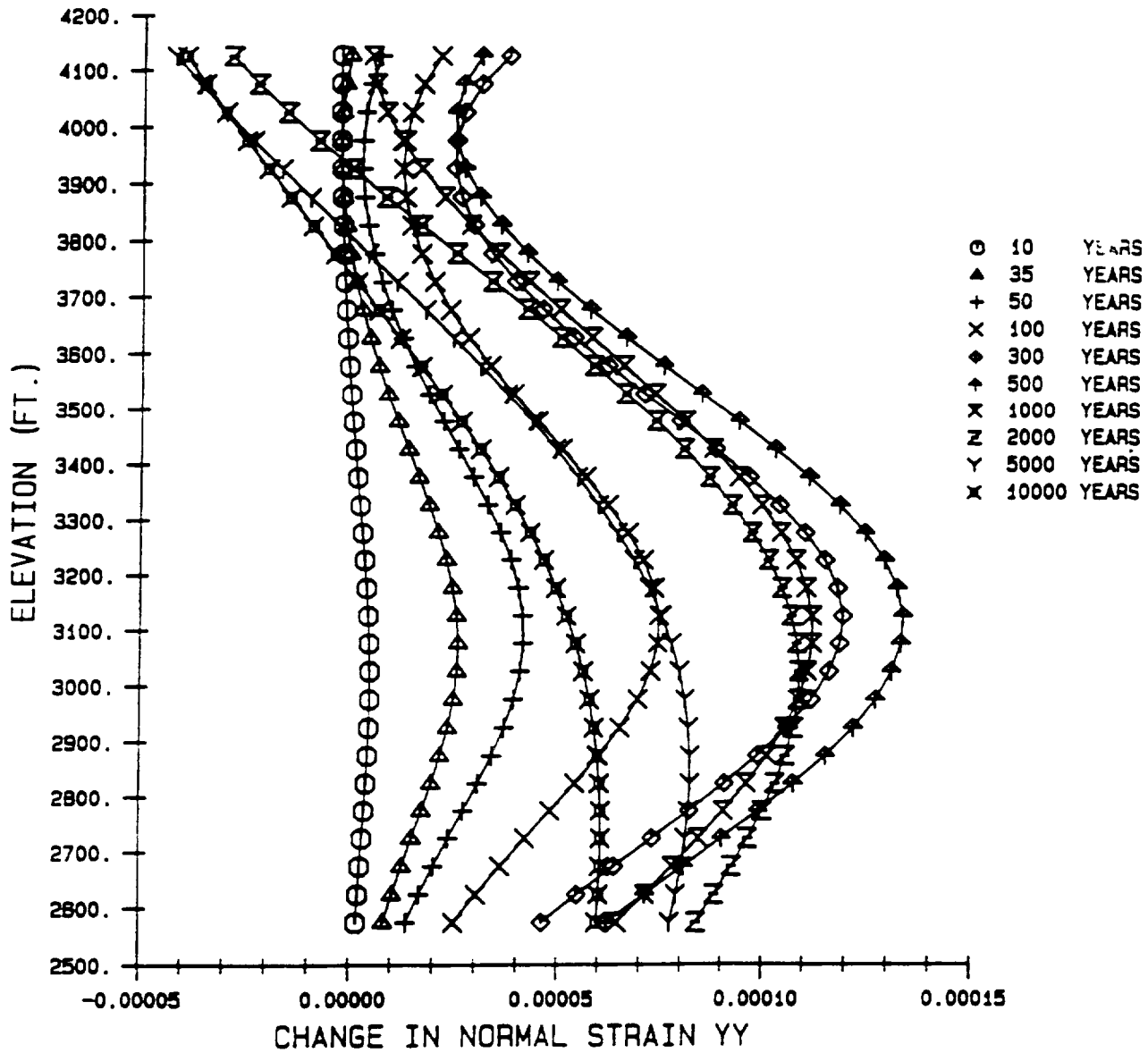

Figure A-9. Exploratory Shaft 1: Changes in Normal Strain ε_{yy} for 10 to 10,000 Years After Waste Emplacement Begins

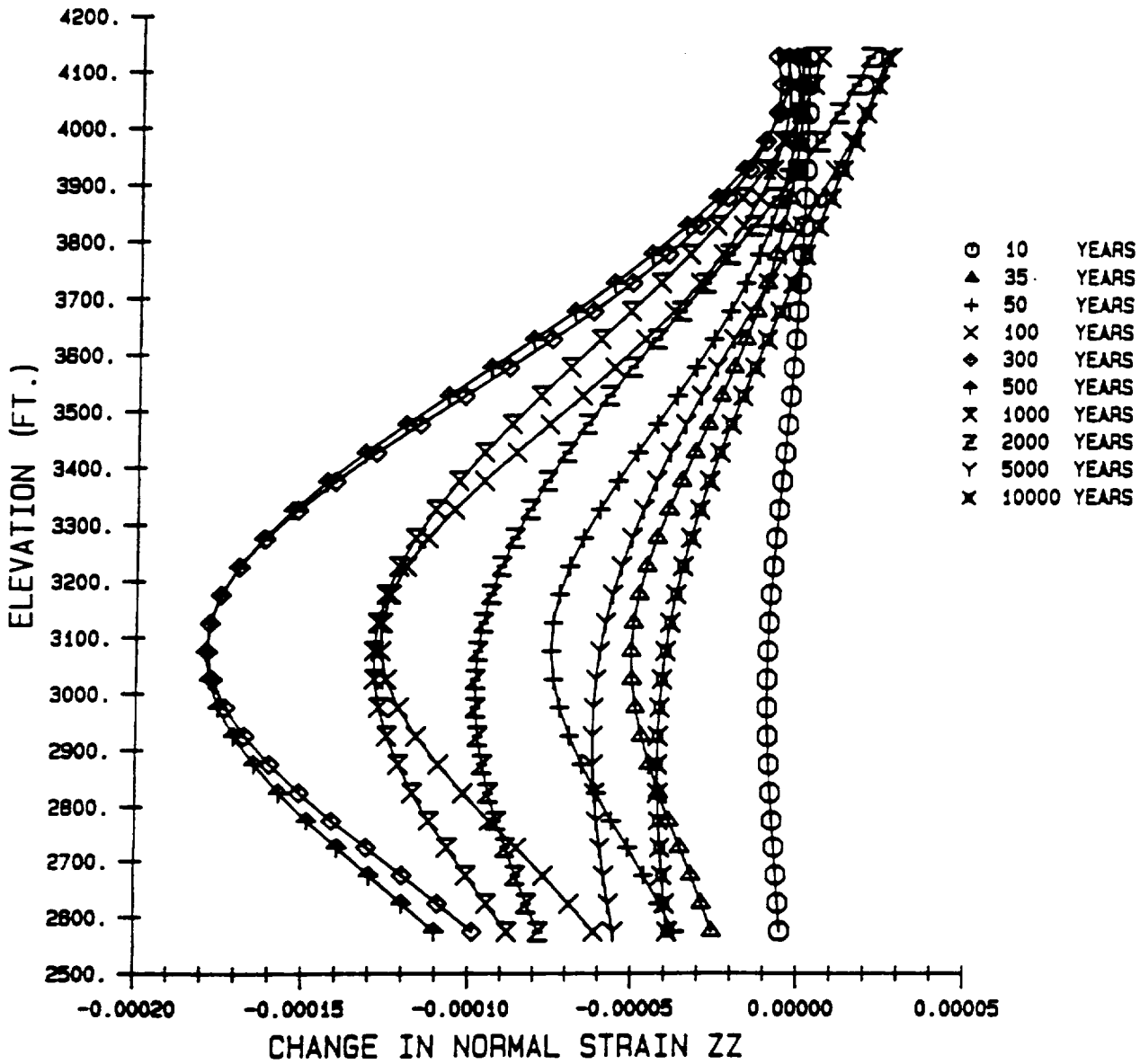

Figure A-10. Exploratory Shaft 1: Changes in Normal Strain ε_{zz} for 10 to 10,000 Years After Waste Emplacement Begins

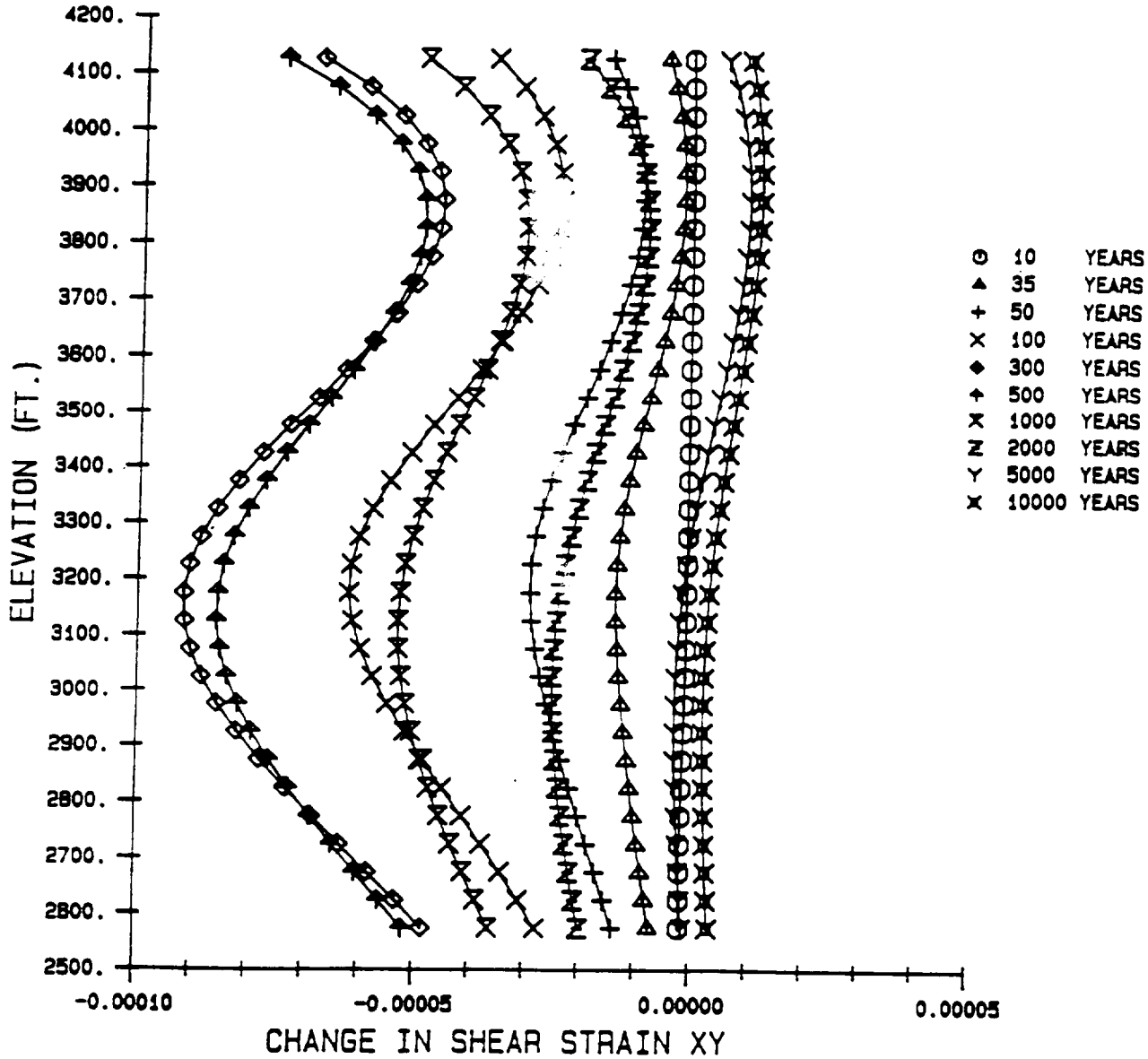

Figure A-11. Exploratory Shaft 1: Changes in Shear Strain ε_{xy} for 10 to 10,000 Years After Waste Emplacement Begins

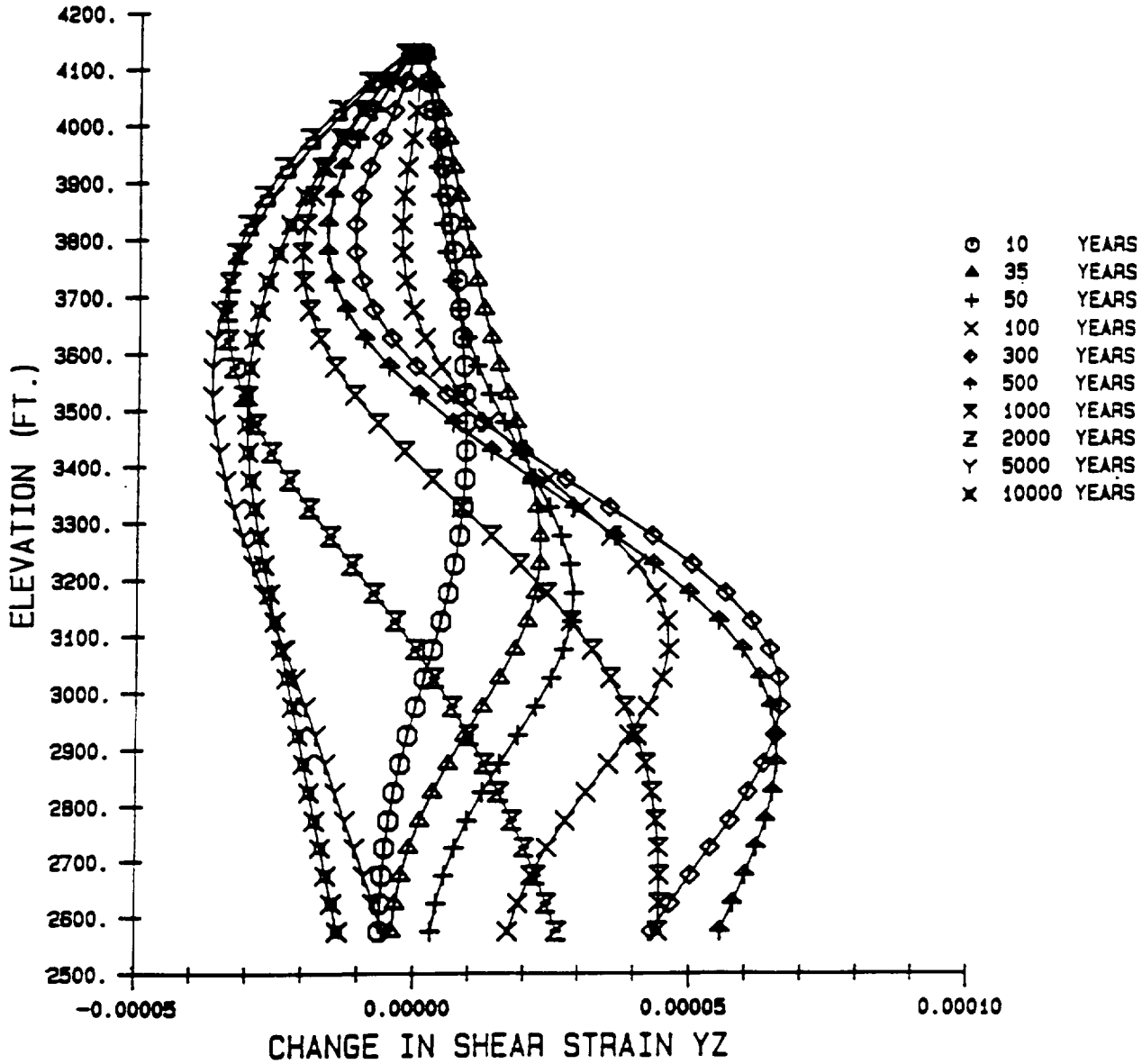

Figure A-12. Exploratory Shaft 1: Changes in Shear Strain ε_{yz} for 10 to 10,000 Years After Waste Emplacement Begins

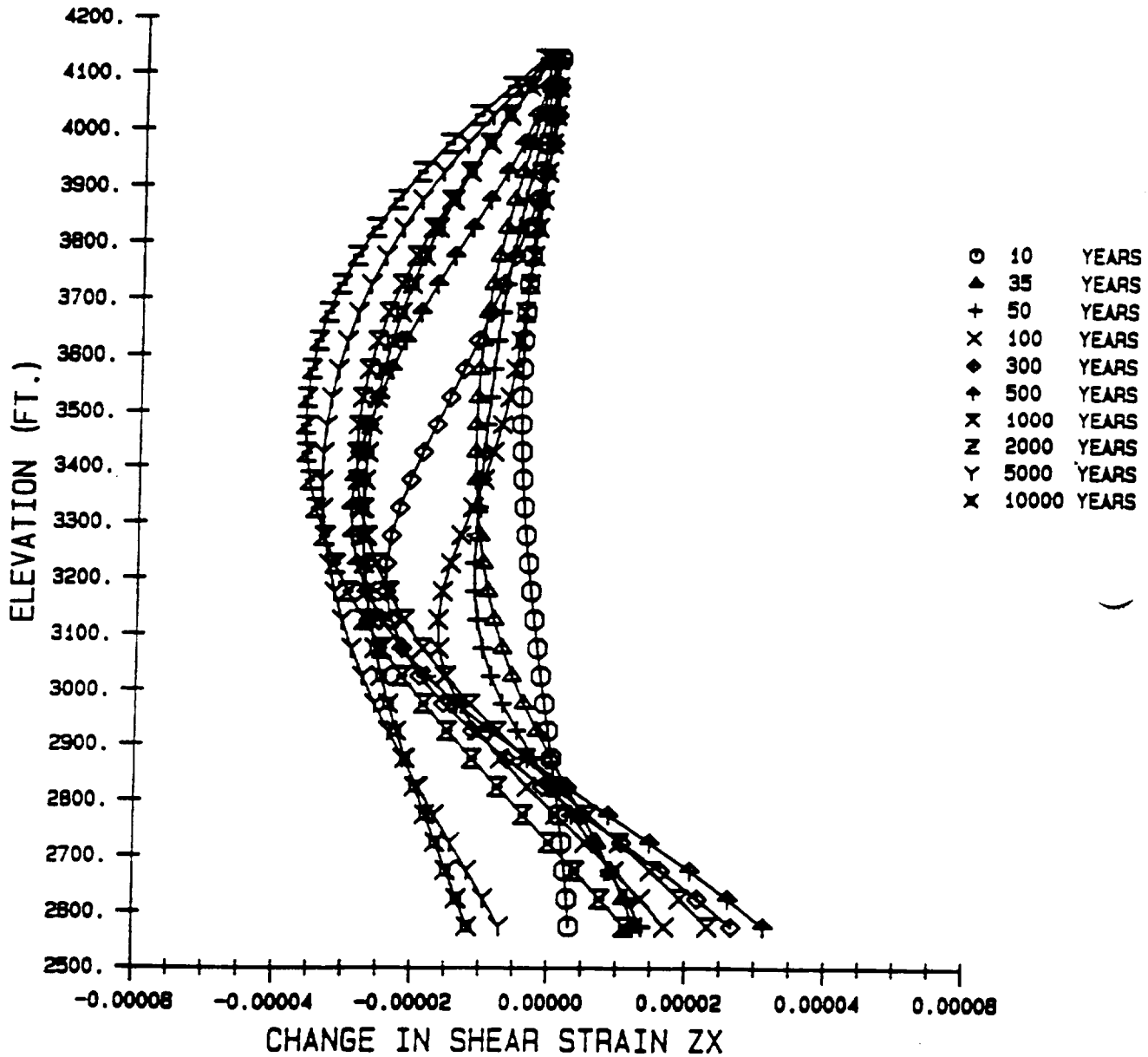

Figure A-13. Exploratory Shaft 1: Changes in Shear Strain ε_{zx} for 10 to 10,000 Years After Waste Emplacement Begins

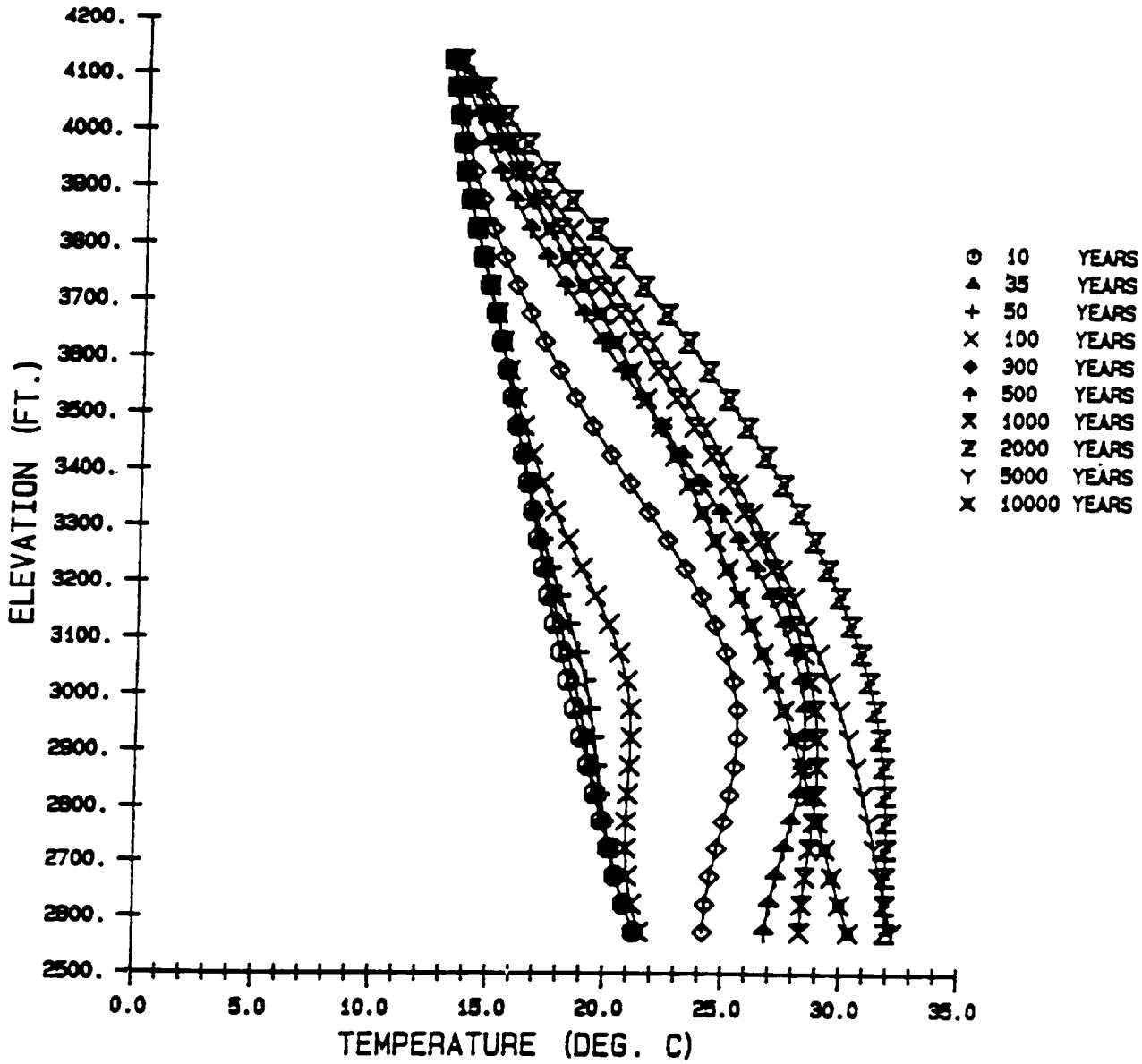

Figure A-14. Exploratory Shaft 2: Temperature Histories for 10 to 10,000 Years After Waste Emplacement Begins

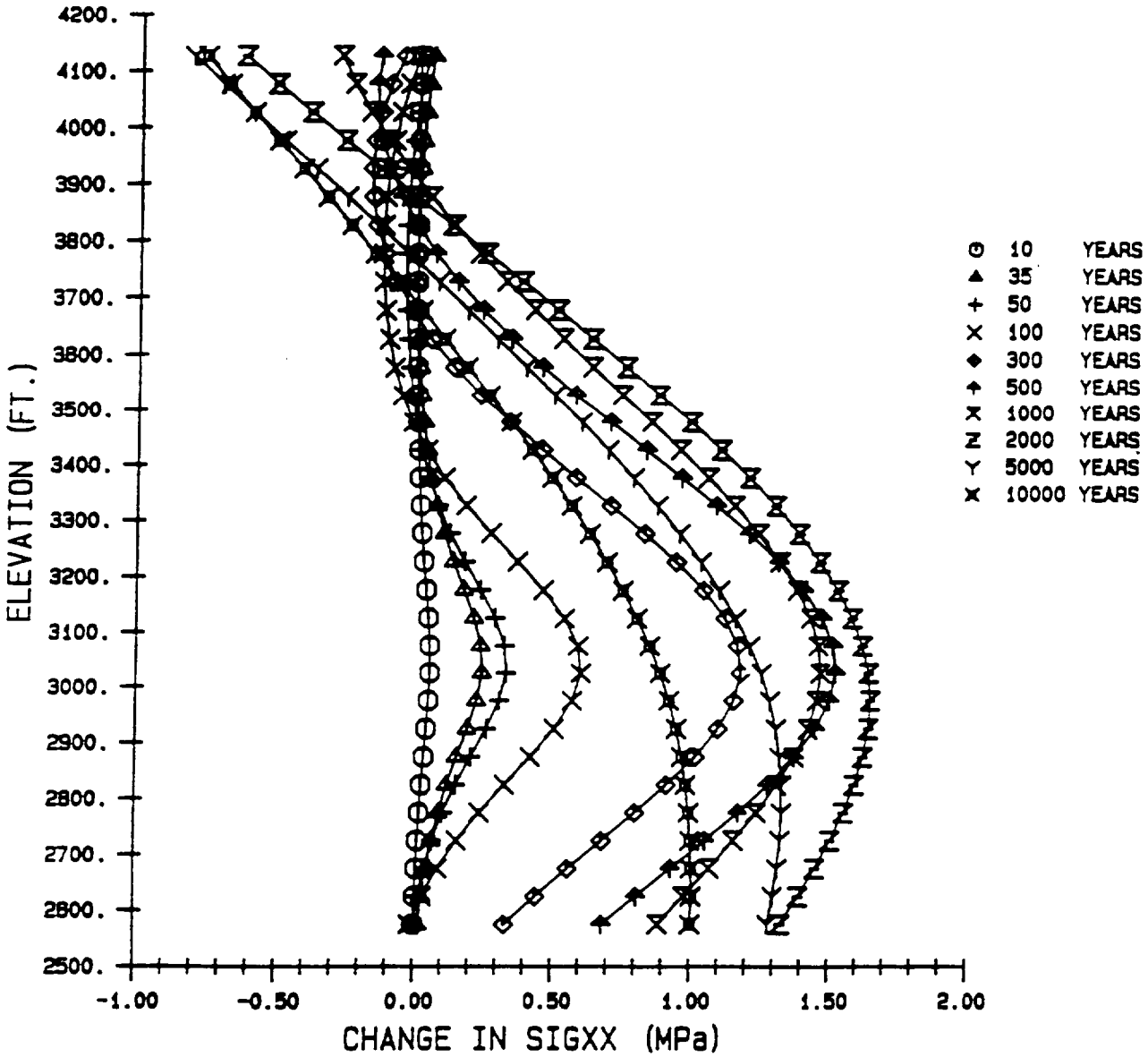

Figure A-15. Exploratory Shaft 2: Changes in Normal Stress σ_{xx} for 10 to 10,000 Years After Waste Emplacement Begins

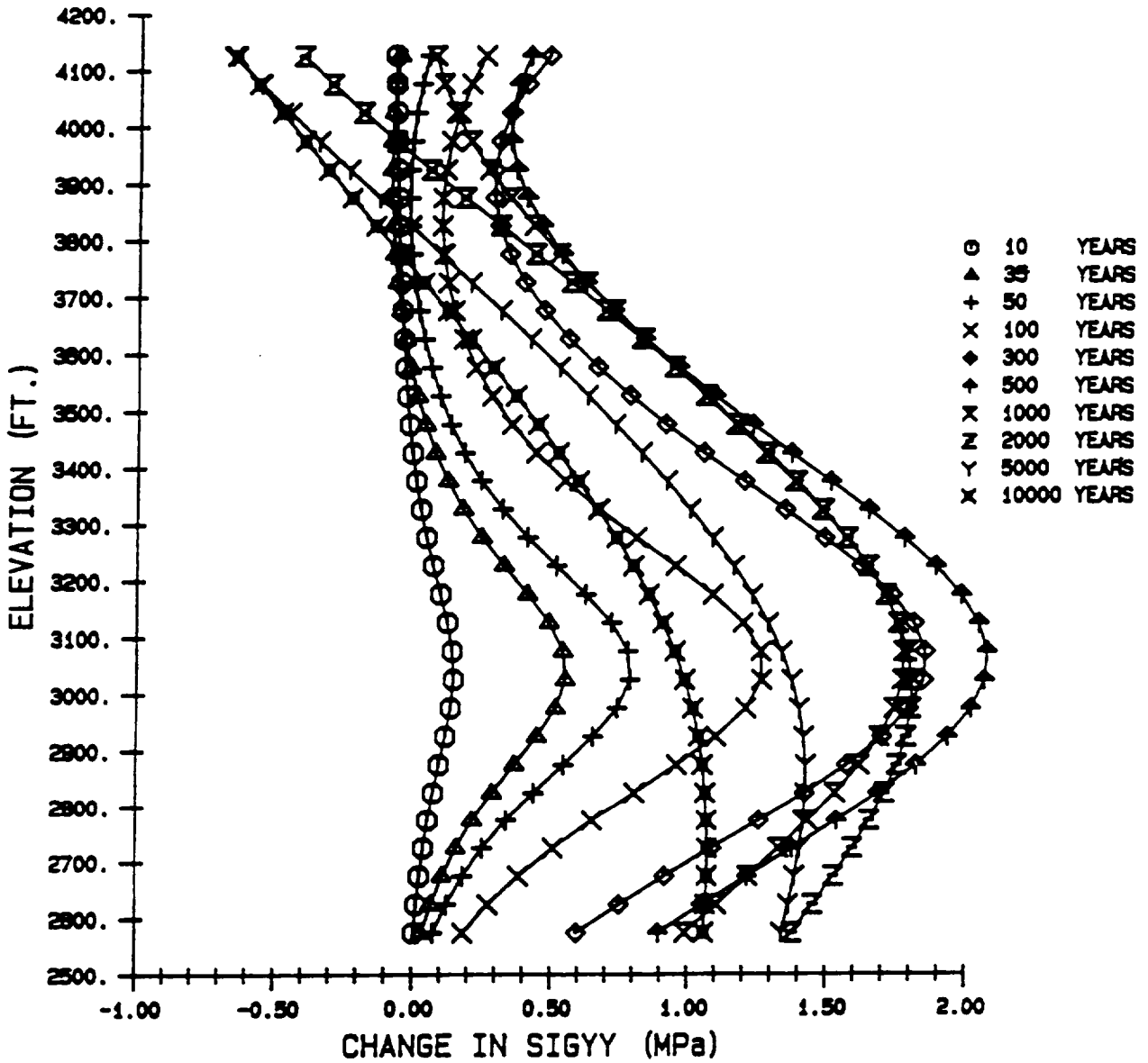

Figure A-16. Exploratory Shaft 2: Changes in Normal Stress σ_{yy} for 10 to 10,000 Years After Waste Emplacement Begins

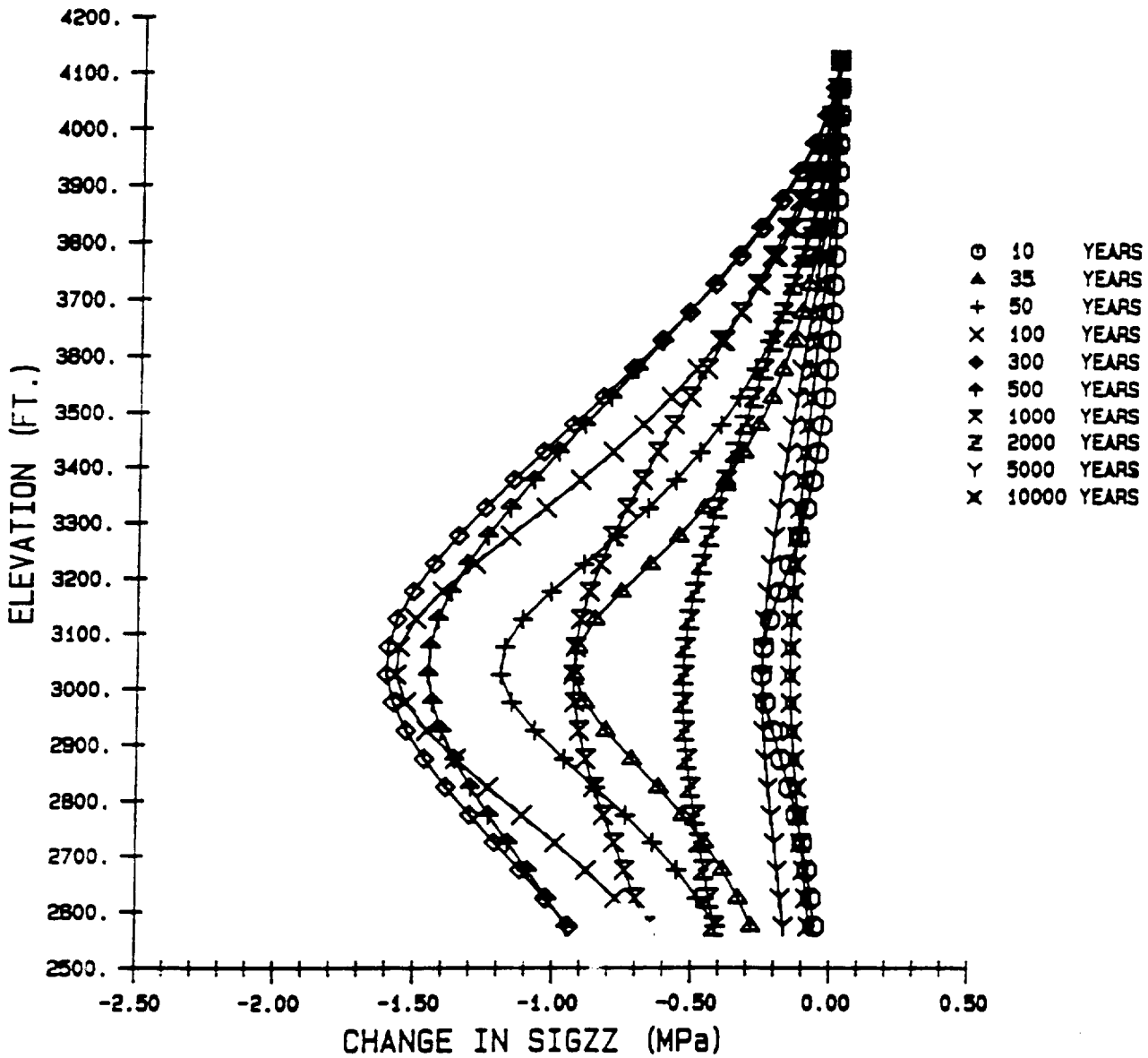

Figure A-17. Exploratory Shaft 2: Changes in Normal Stress σ_{zz} for 10 to 10,000 Years After Waste Emplacement Begins

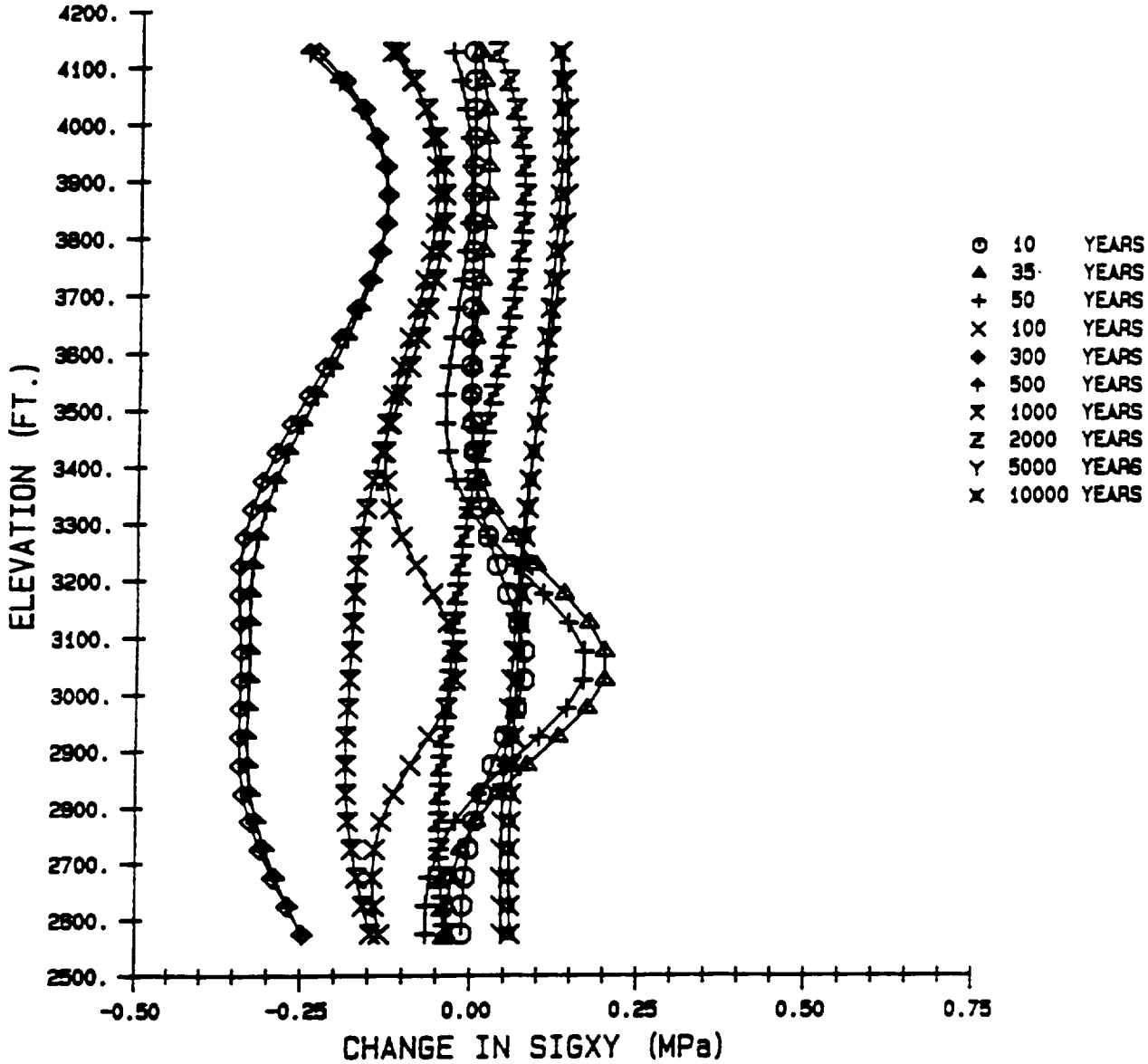

Figure A-18. Exploratory Shaft 2: Changes in Shear Stress σ_{xy} for 10 to 10,000 Years After Waste Emplacement Begins

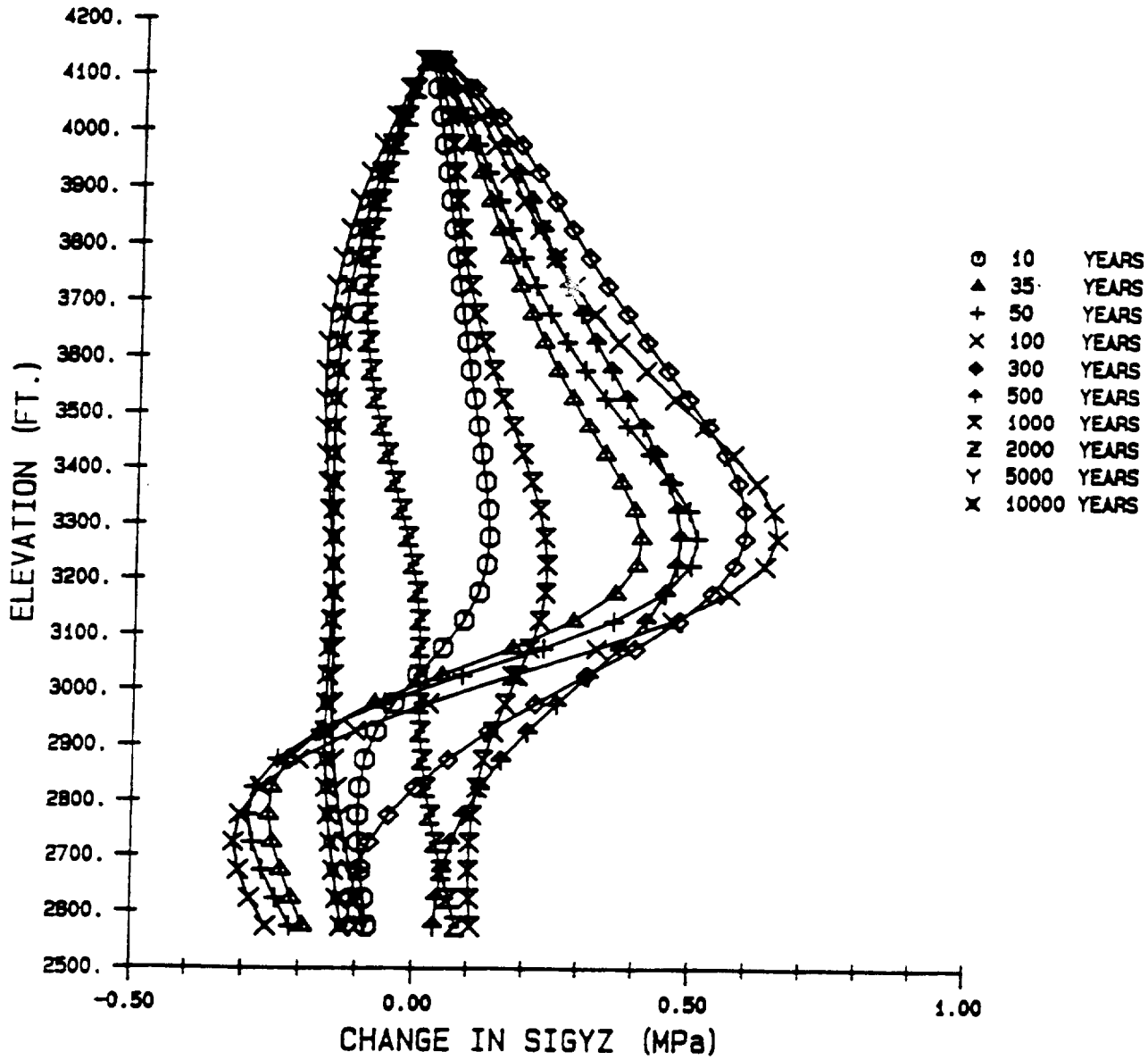

Figure A-19. Exploratory Shaft 2: Changes in Shear Stress σ_{yz} for 10 to 10,000 Years After Waste Emplacement Begins

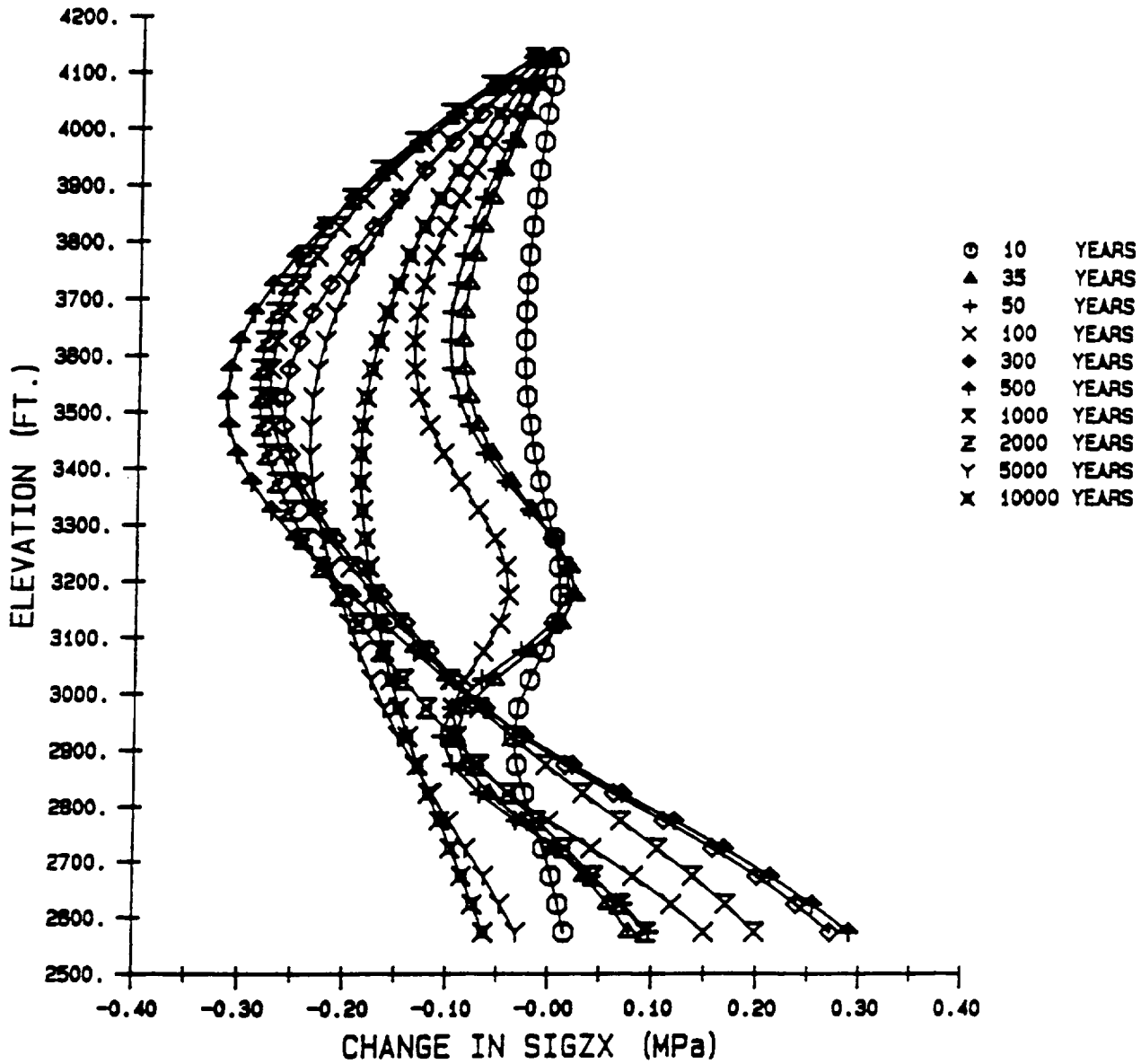

Figure A-20. Exploratory Shaft 2: Changes in Shear Stress σ_{zx} for 10 to 10,000 Years After Waste Emplacement Begins

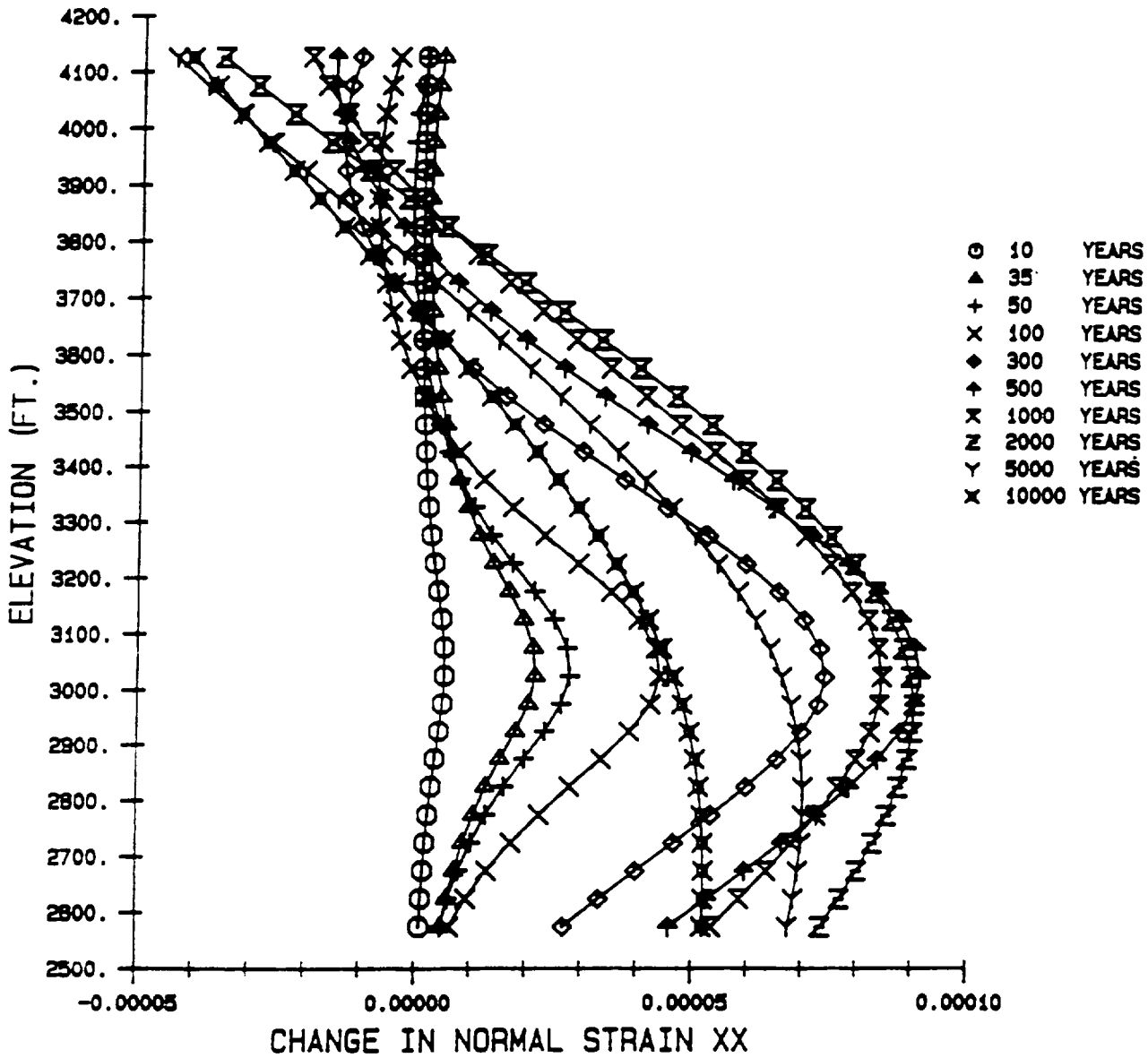

Figure A-21. Exploratory Shaft 2: Changes in Normal Strain ε_{xx} for 10 to 10,000 Years After Waste Emplacement Begins

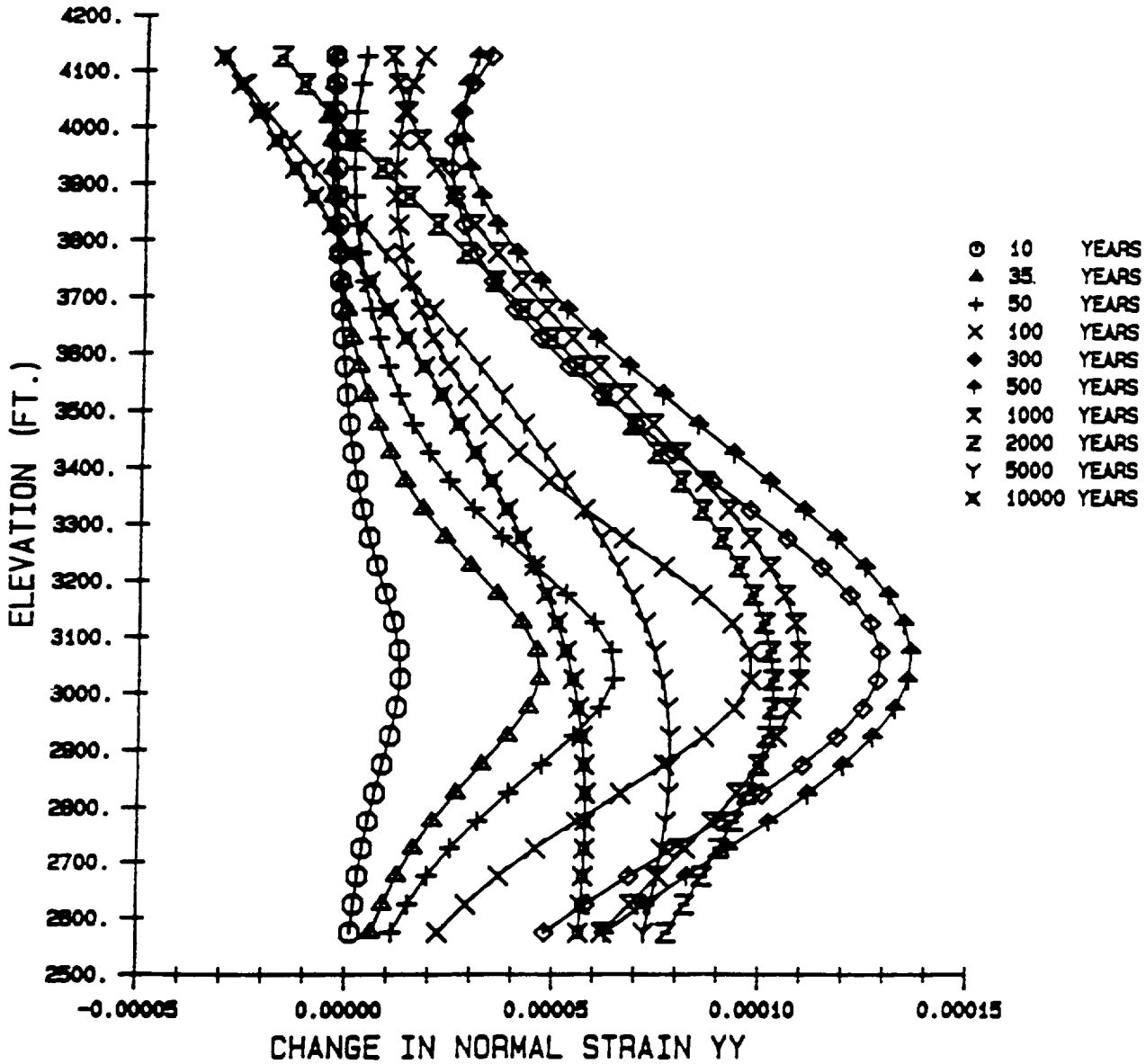

Figure A-22. Exploratory Shaft 2: Changes in Normal Strain ε_{yy} for 10 to 10,000 Years After Waste Emplacement Begins

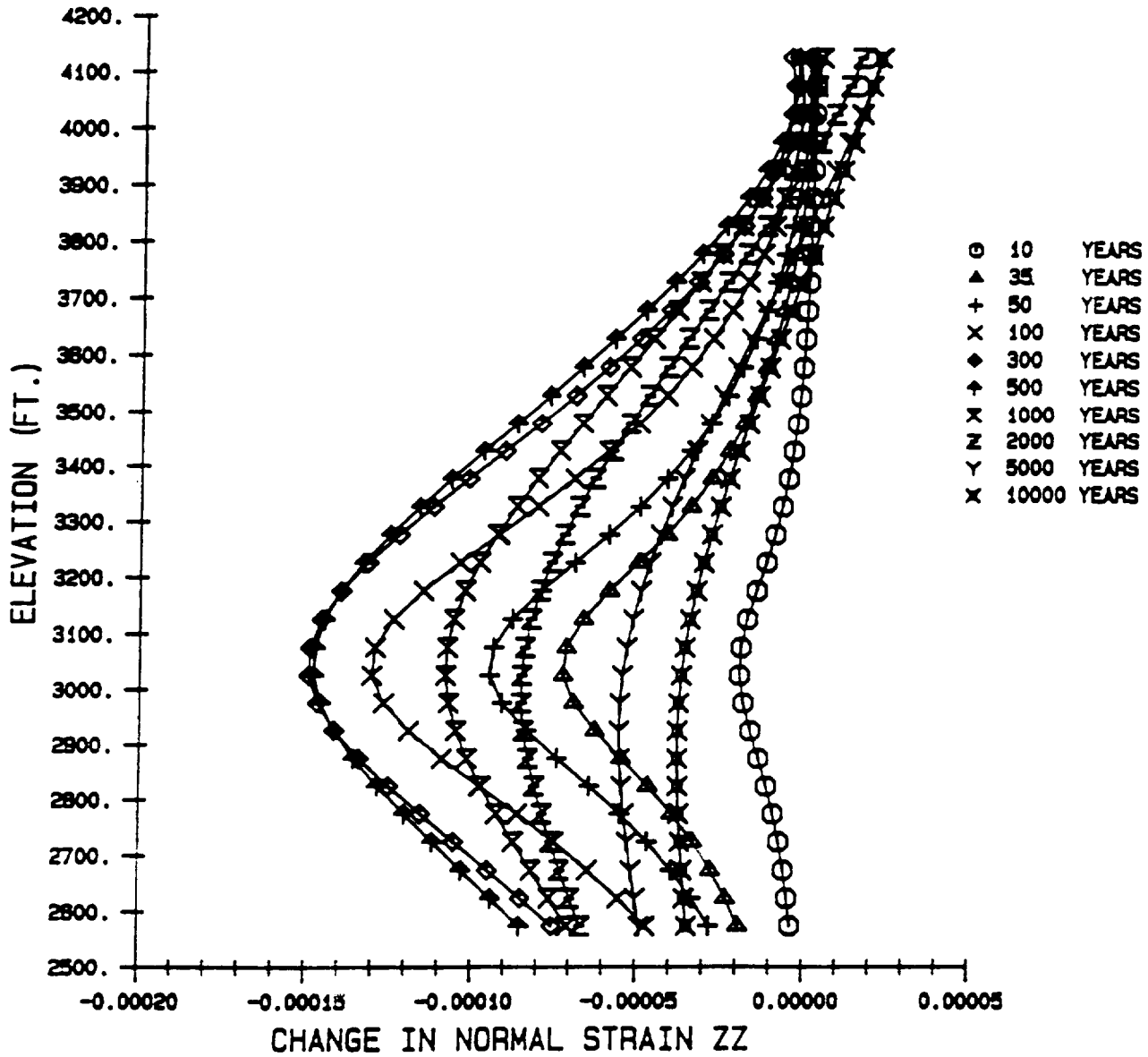

Figure A-23. Exploratory Shaft 2: Changes in Normal Strain ε_{zz} for 10 to 10,000 Years After Waste Emplacement Begins

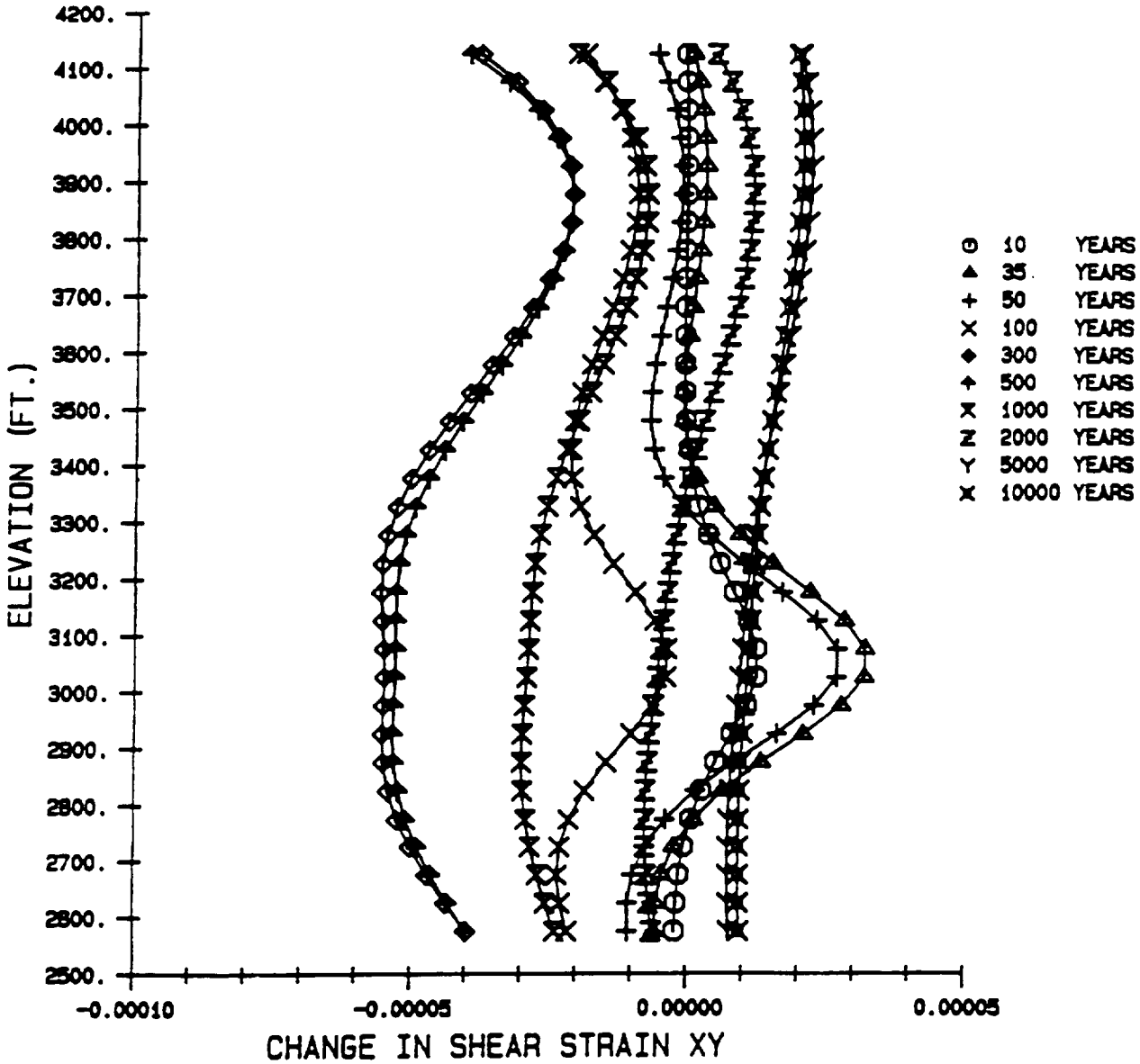

Figure A-24. Exploratory Shaft 2: Changes in Shear Strain ε_{xy} for 10 to 10,000 Years After Waste Emplacement Begins

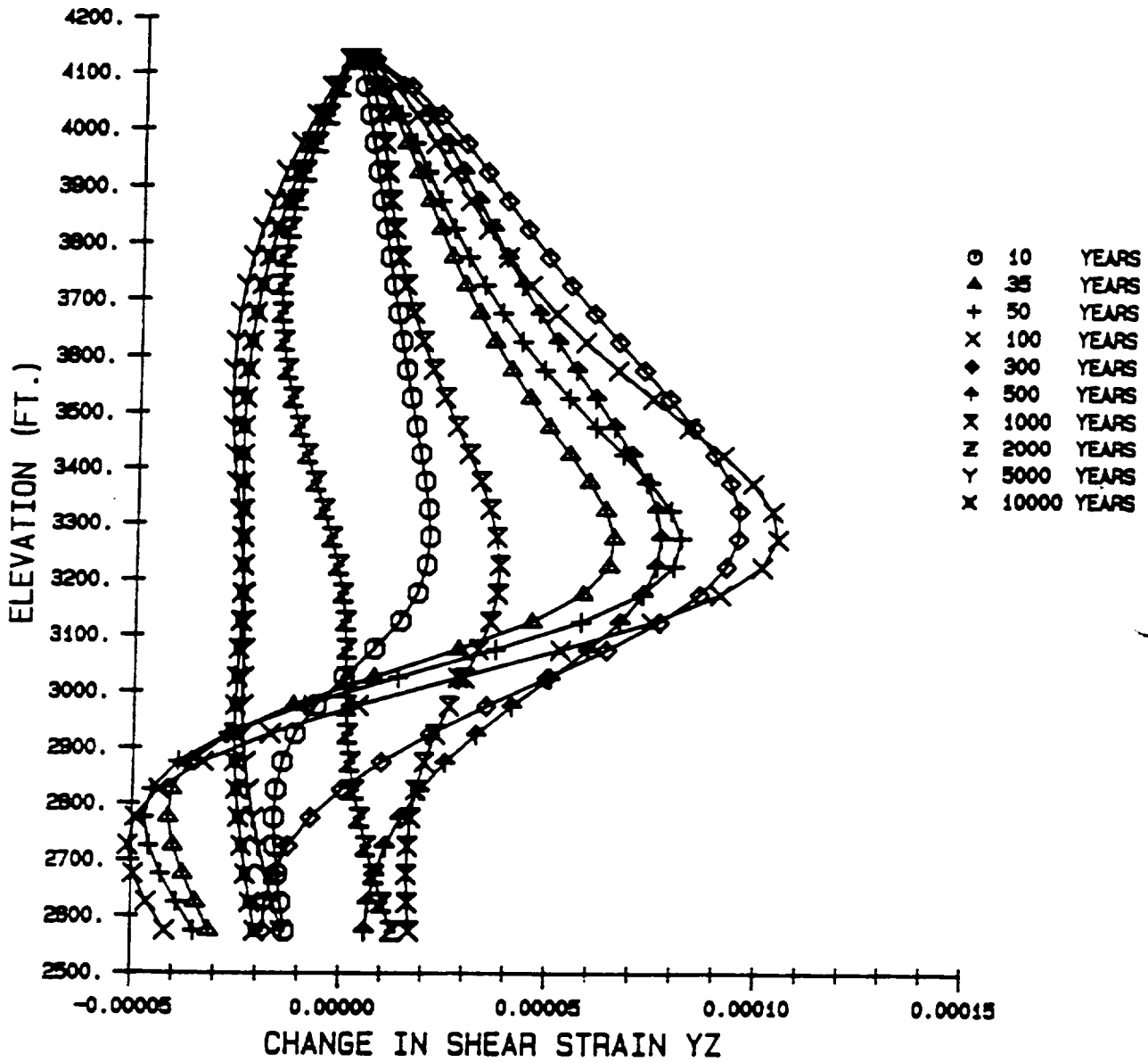

Figure A-25. Exploratory Shaft 2: Changes in Shear Strain ε_{yz} for 10 to 10,000 Years After Waste Emplacement Begins

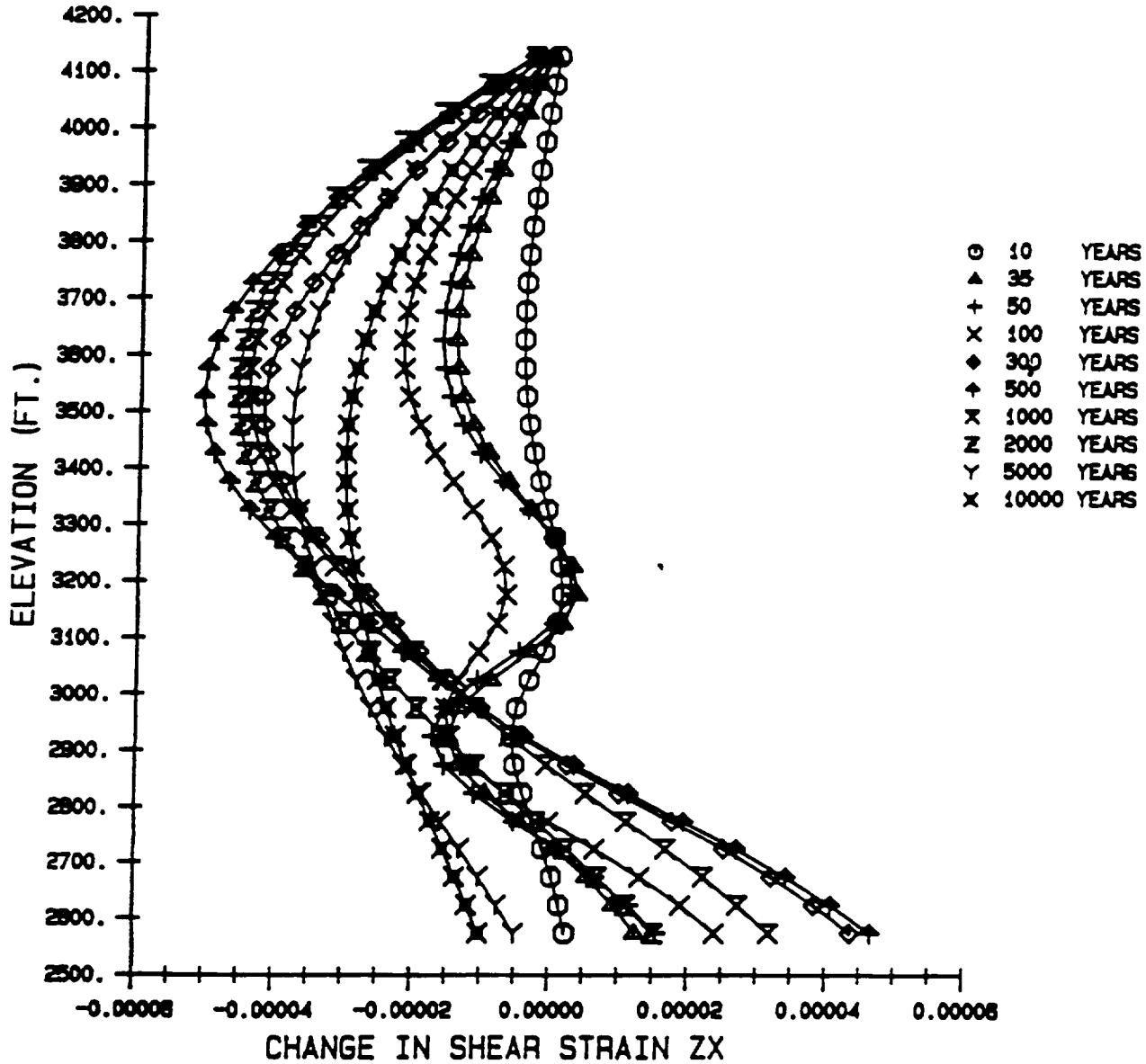

Figure A-26. Exploratory Shaft 2: Changes in Shear Strain ε_{zx} for 10 to 10,000 Years After Waste Emplacement Begins

APPENDIX B

Temperature and Induced Stresses ($\Delta\sigma_{xx}$, $\Delta\sigma_{yy}$, $\Delta\sigma_{zz}$, $\Delta\sigma_{xy}$, $\Delta\sigma_{yz}$, $\Delta\sigma_{zx}$) in the Exploratory Shaft Facility for 10 to 10,000 Years After Waste Emplacement Begins

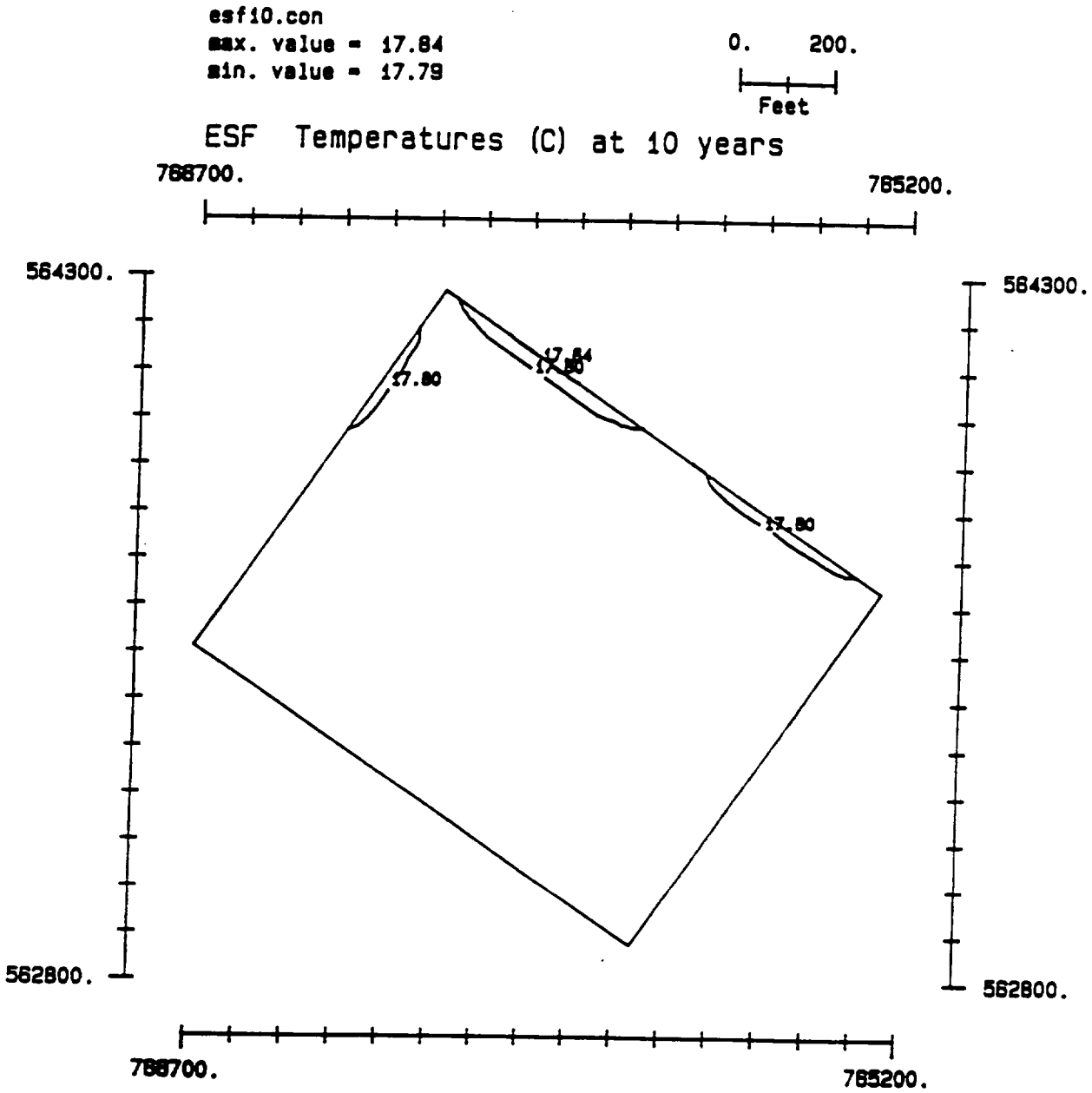

Figure B-1. Exploratory Shaft Facility: Temperatures (°C) 10 Years After Waste Emplacement Begins

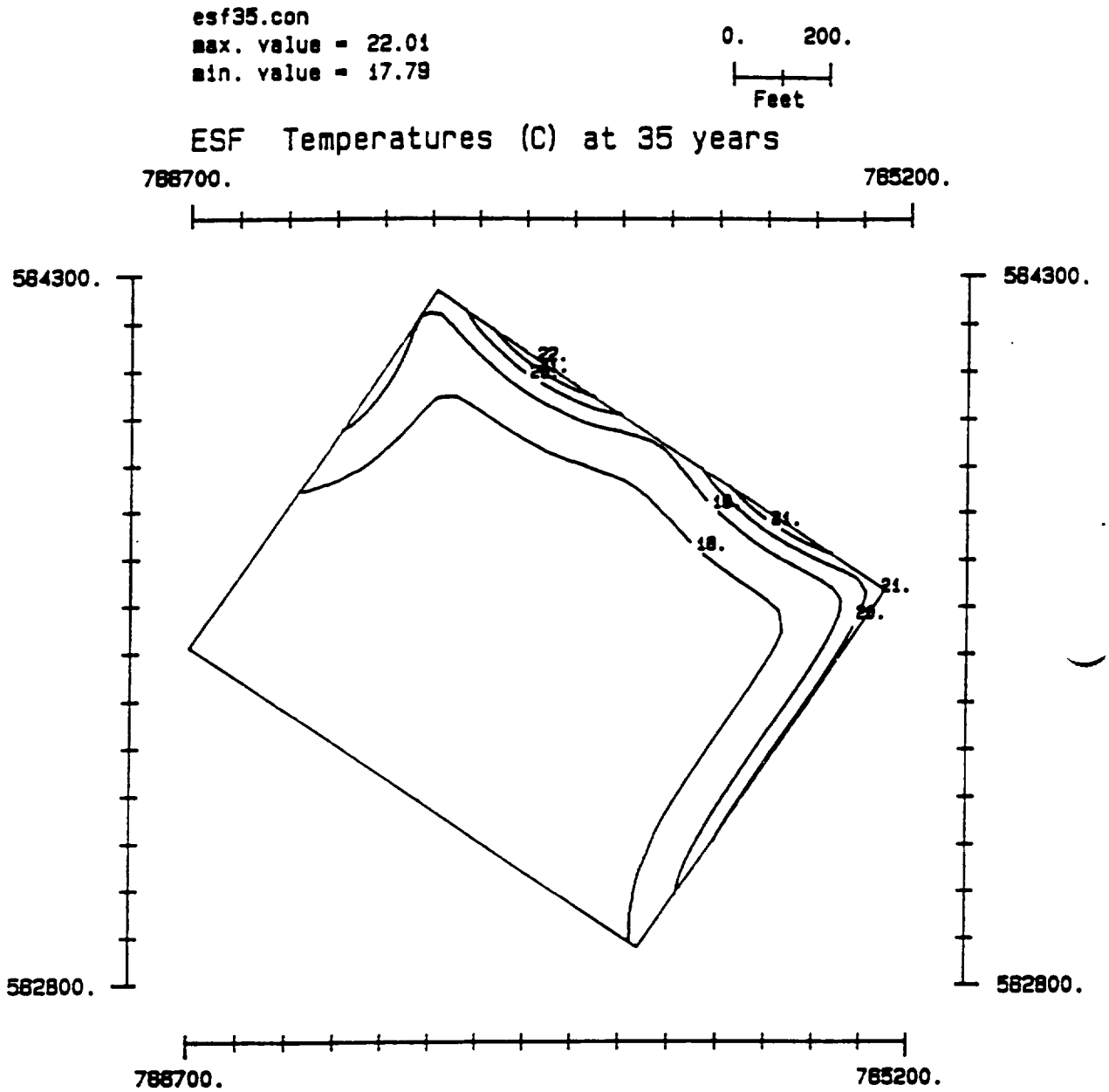

Figure B-2. Exploratory Shaft Facility: Temperatures (°C) 35 Years After Waste Emplacement Begins

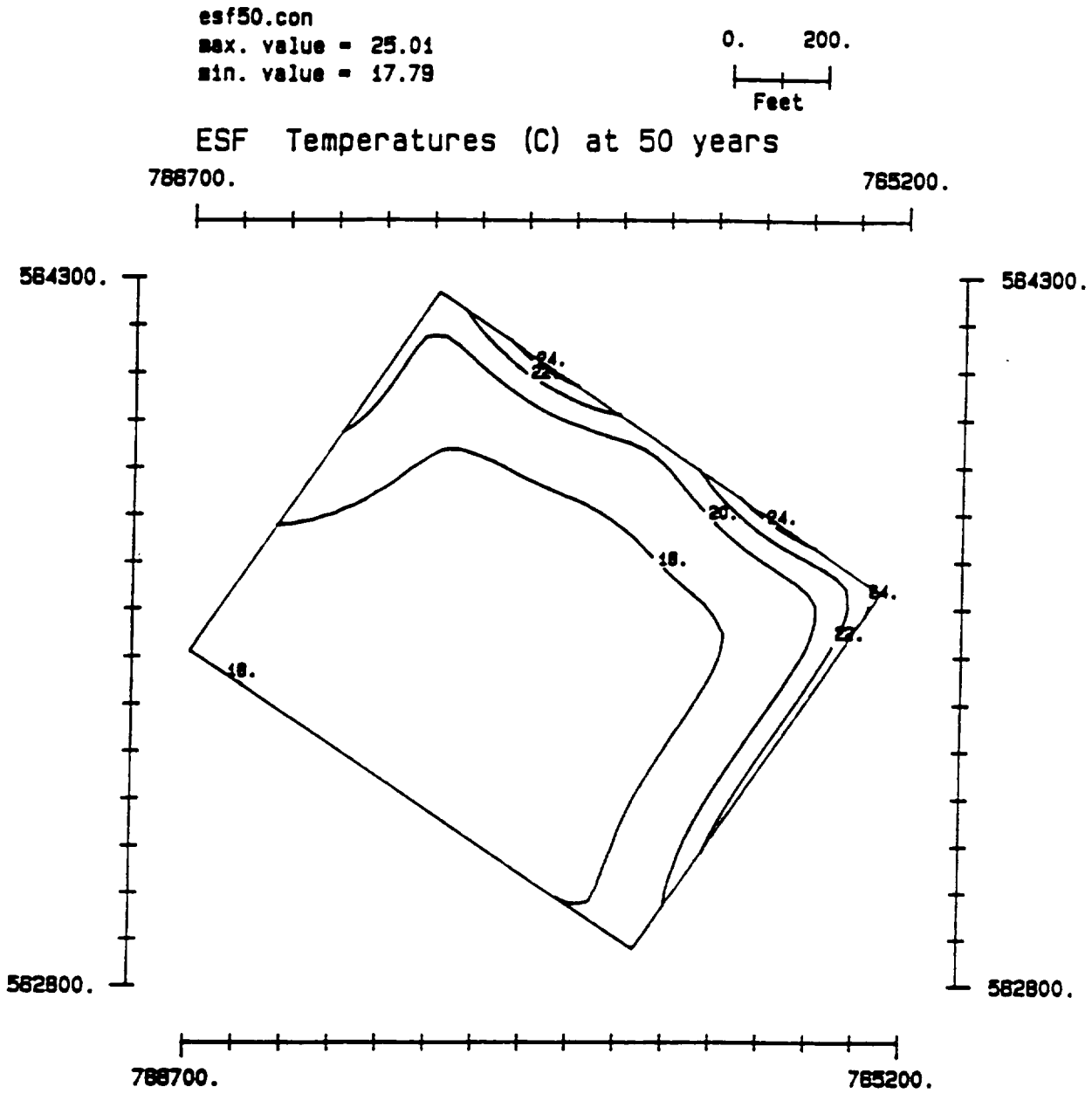

Figure B-3. Exploratory Shaft Facility: Temperatures (°C) 50 Years After Waste Emplacement Begins

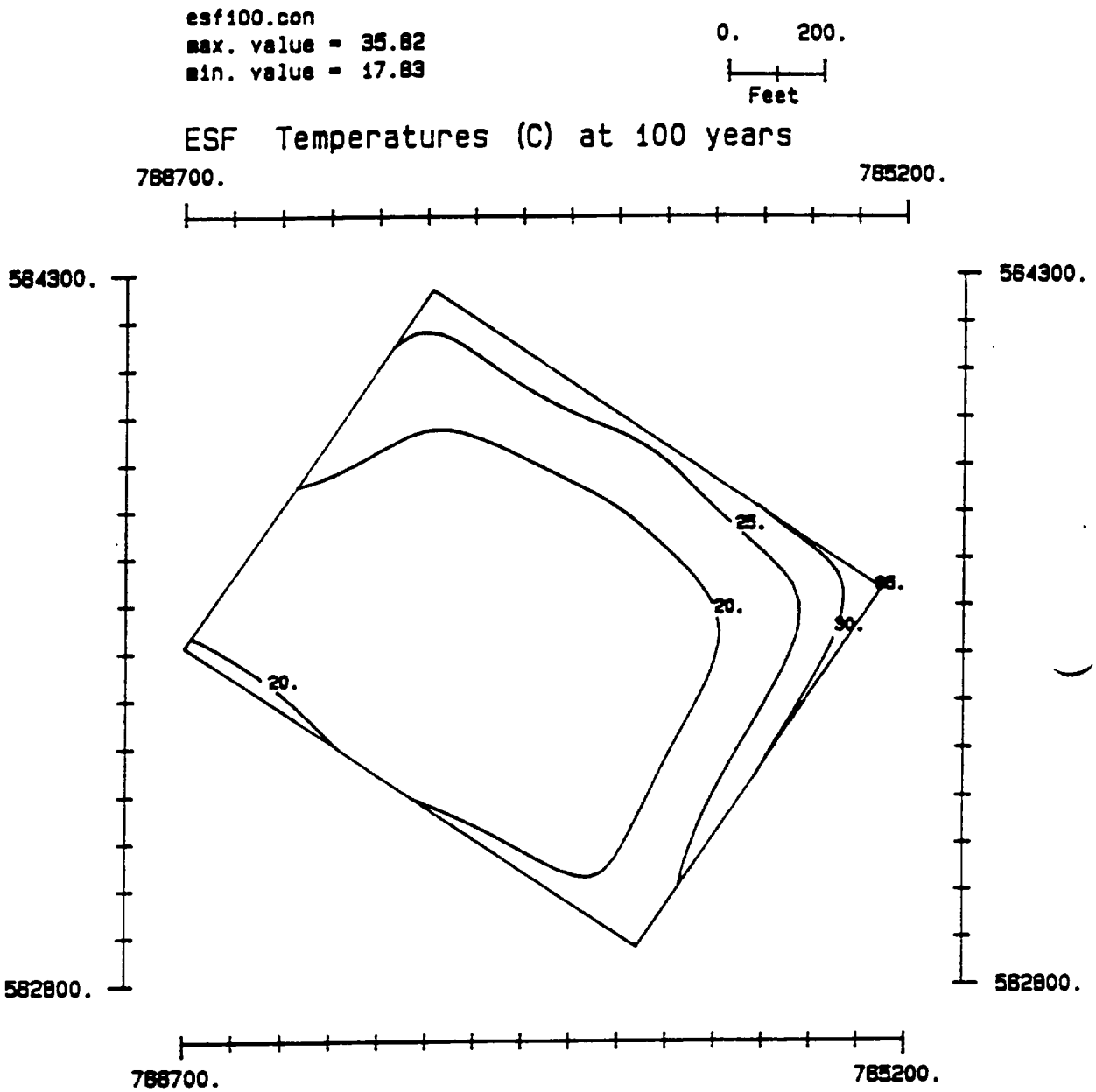

Figure B-4. Exploratory Shaft Facility: Temperatures (°C) 100 Years After Waste Emplacement Begins

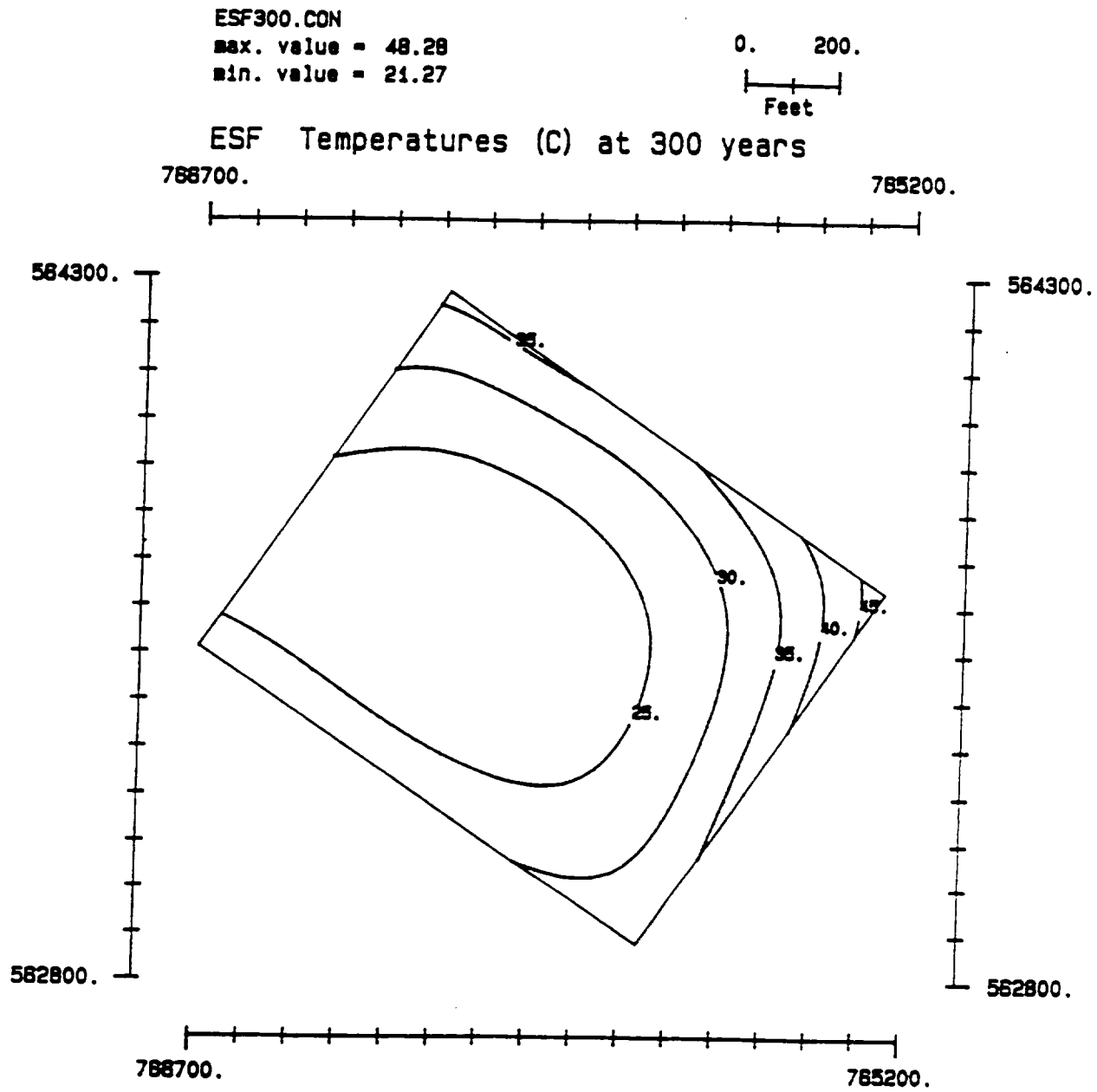

Figure B-5. Exploratory Shaft Facility: Temperatures (°C) 300 Years After Waste Emplacement Begins

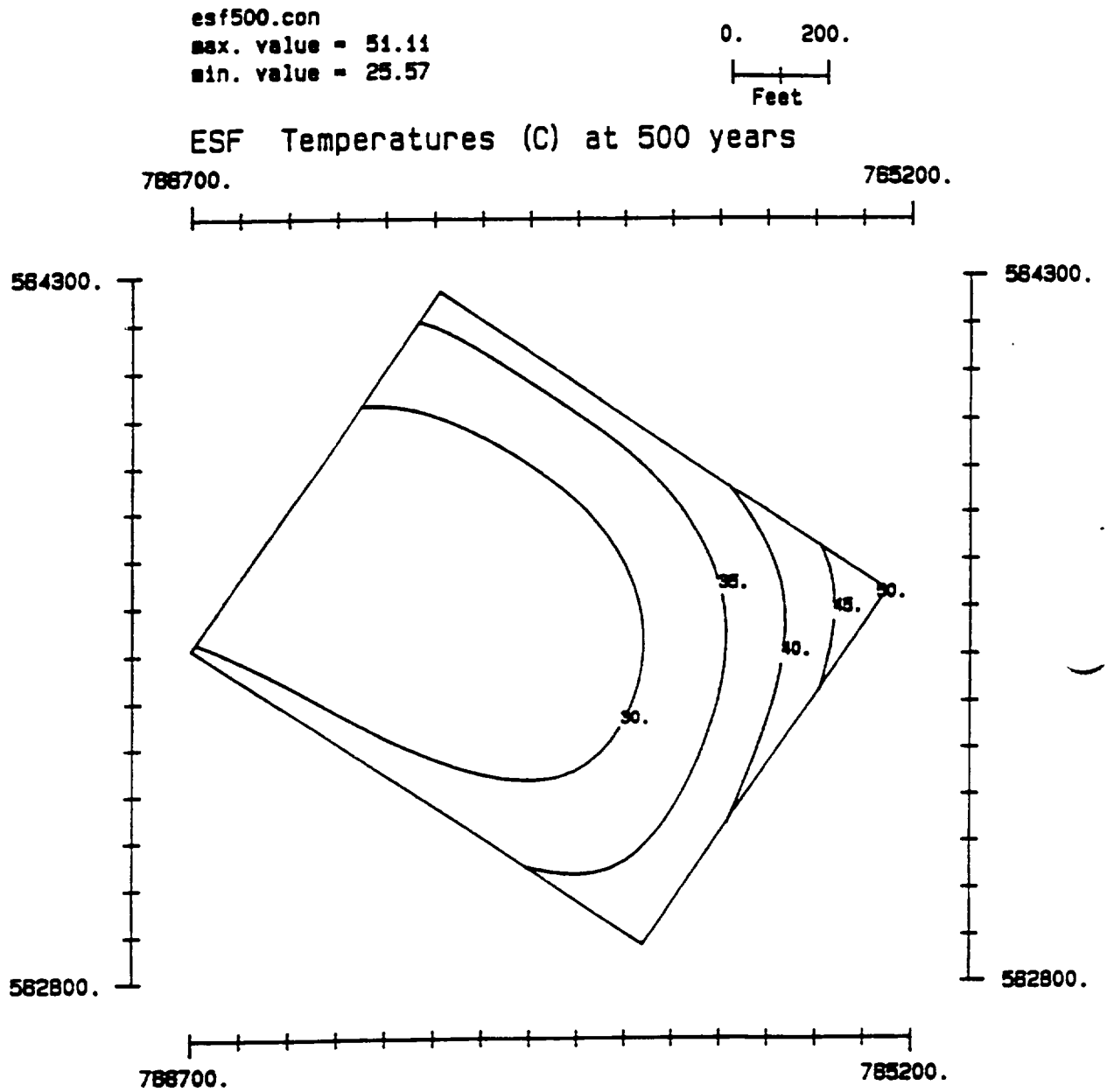

Figure B-6. Exploratory Shaft Facility: Temperatures (°C) 500 Years After Waste Emplacement Begins

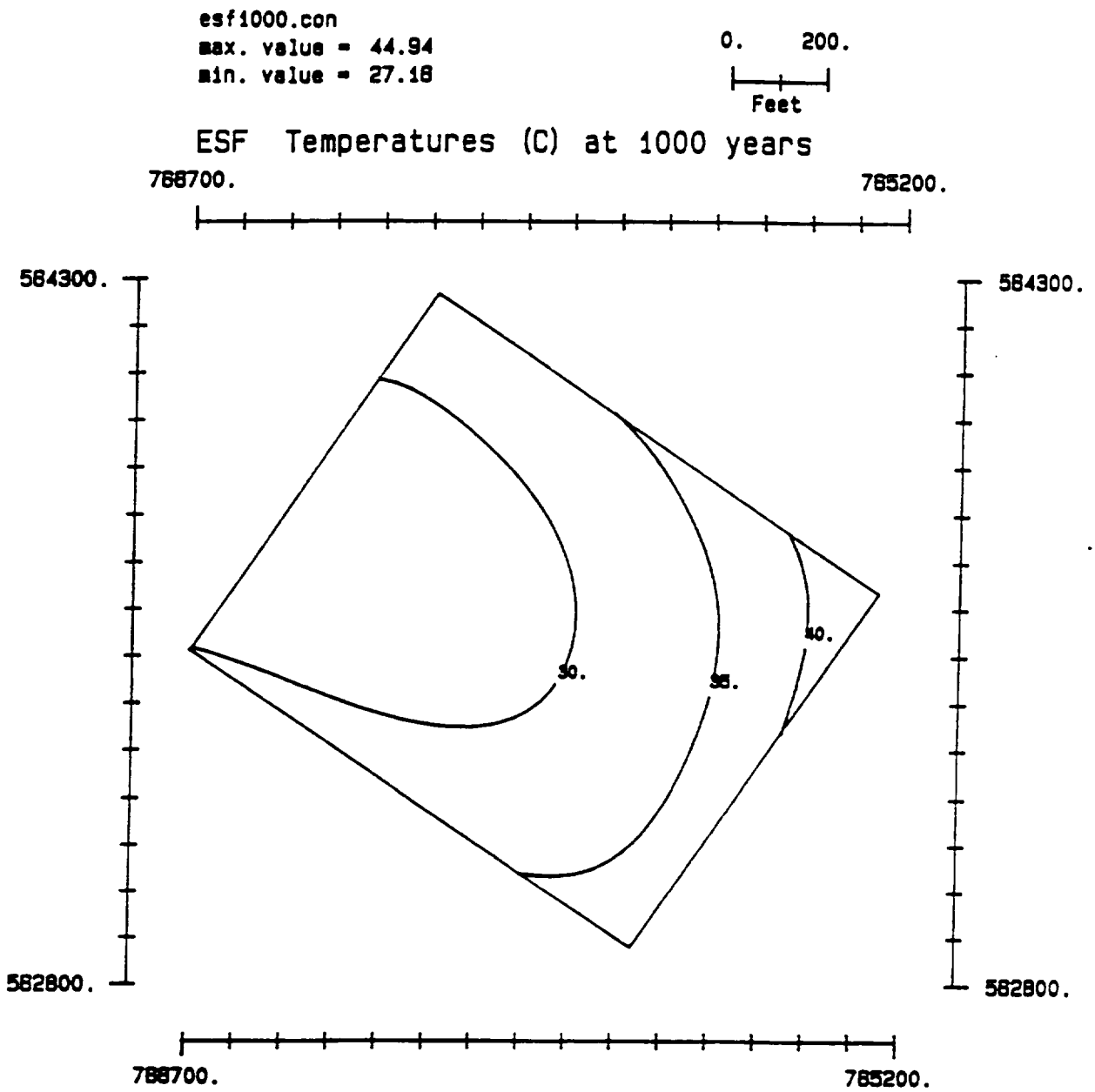

Figure B-7. Exploratory Shaft Facility: Temperatures (°C) 1,000 Years After Waste Emplacement Begins

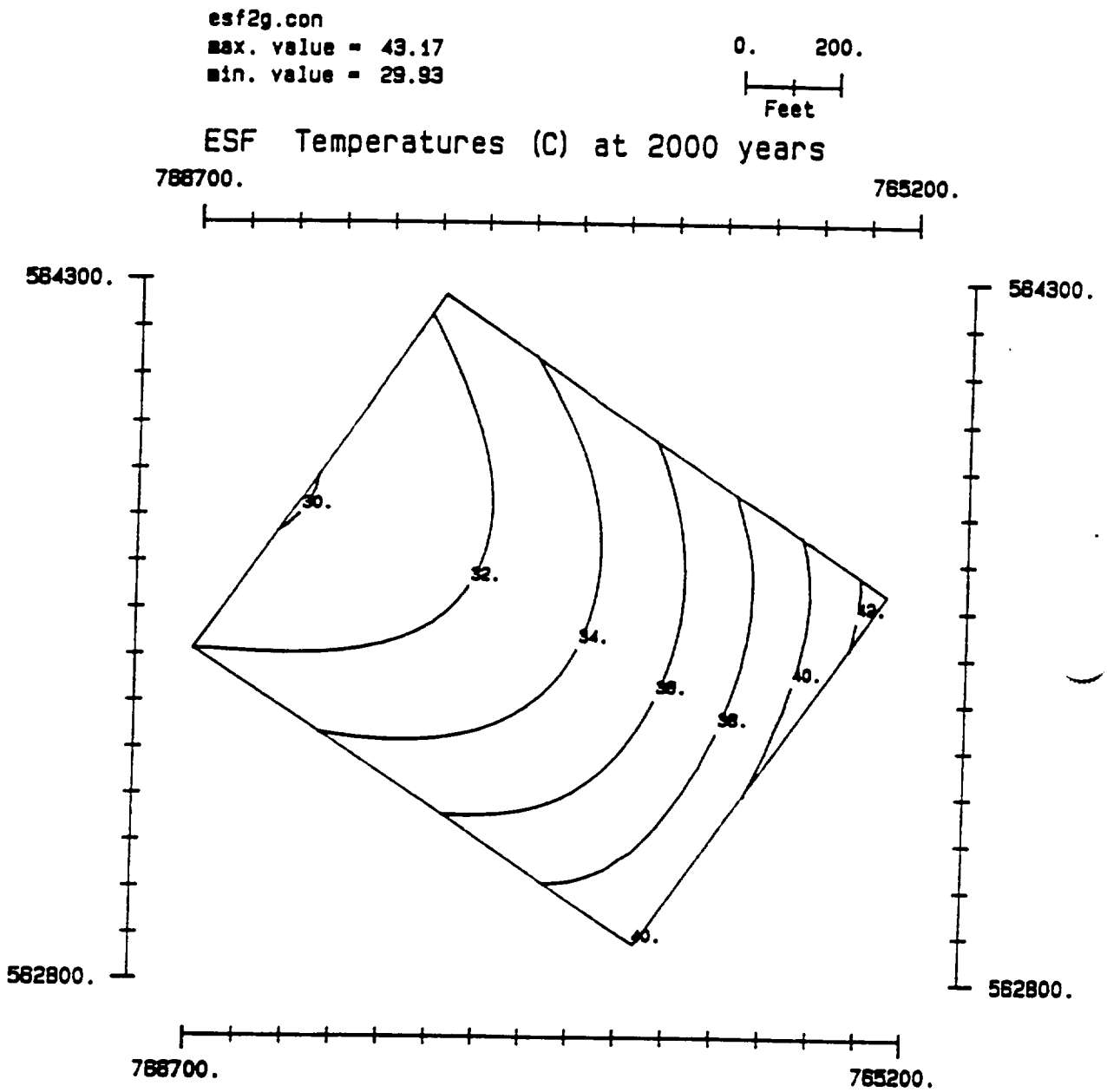

Figure B-8. Exploratory Shaft Facility: Temperatures (°C) 2,000 Years After Waste Emplacement Begins

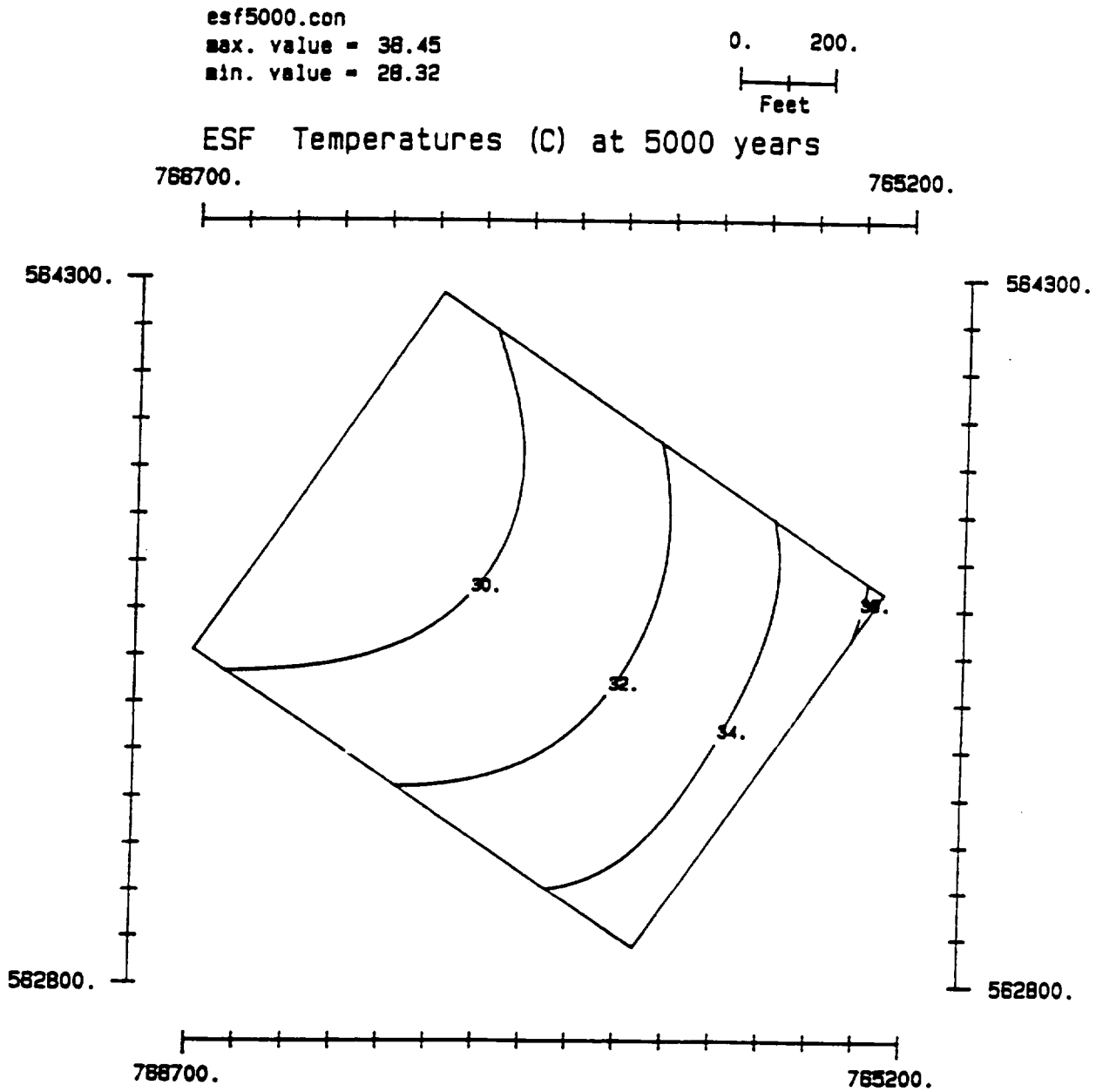

Figure B-9. Exploratory Shaft Facility: Temperatures (°C) 5,000 Years After Waste Emplacement Begins

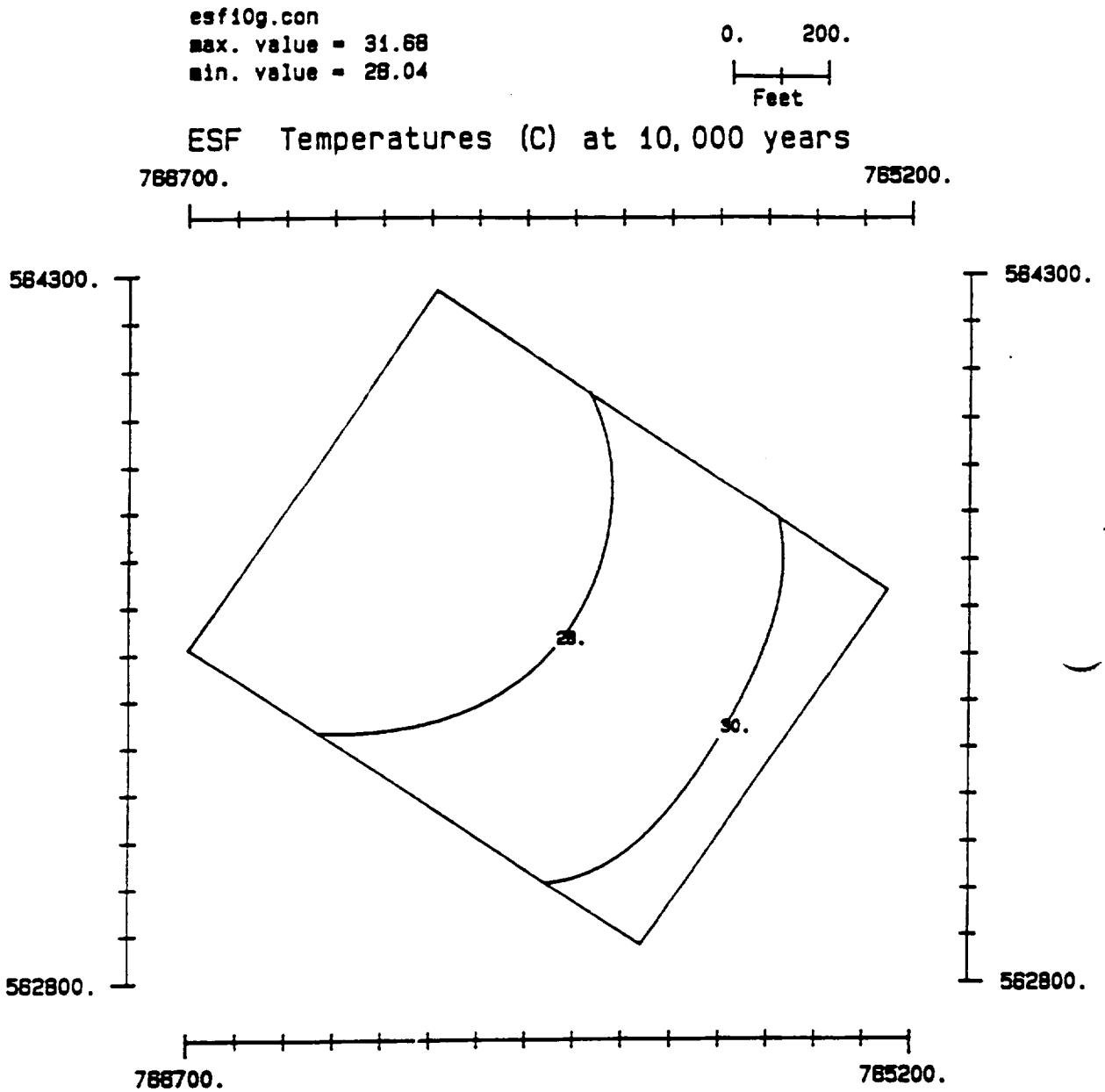

Figure B-10. Exploratory Shaft Facility: Temperatures (°C) 10,000 Years After Waste Emplacement Begins

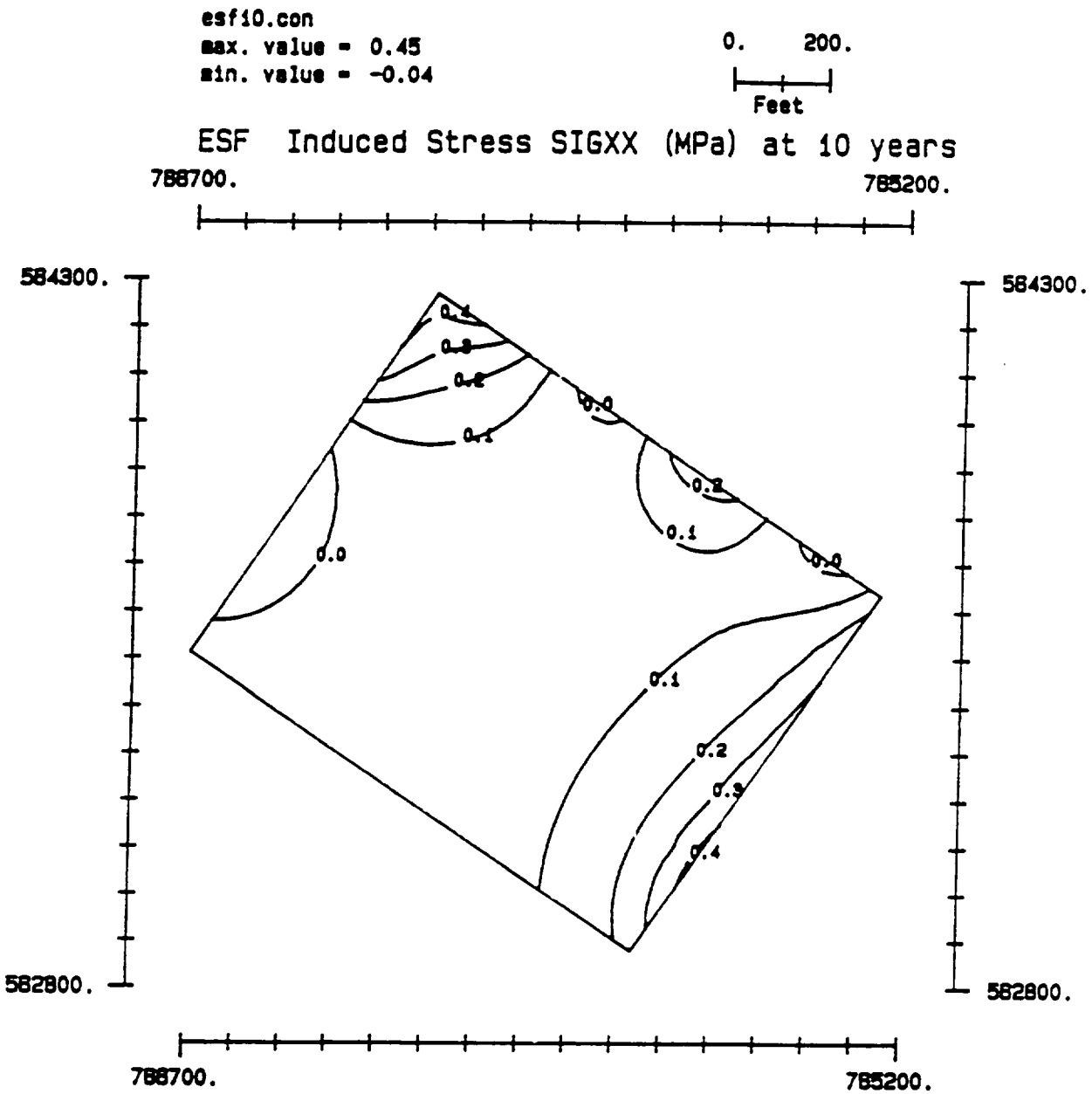

Figure B-11. Exploratory Shaft Facility: Changes in Normal Stress σ_{xx} 10 Years After Waste Emplacement Begins

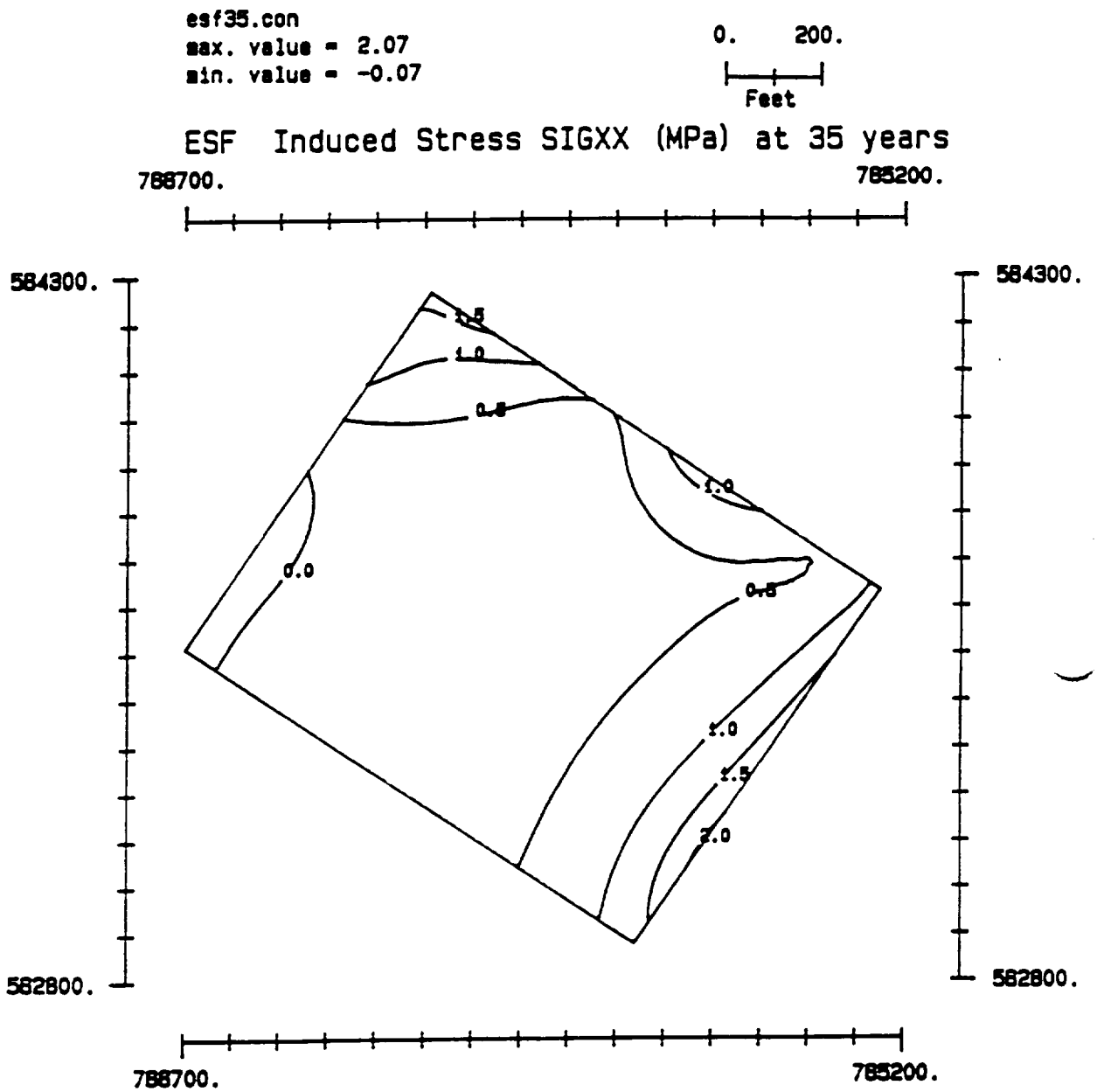

Figure B-12. Exploratory Shaft Facility: Changes in Normal Stress σ_{xx} 35 Years After Waste Emplacement Begins

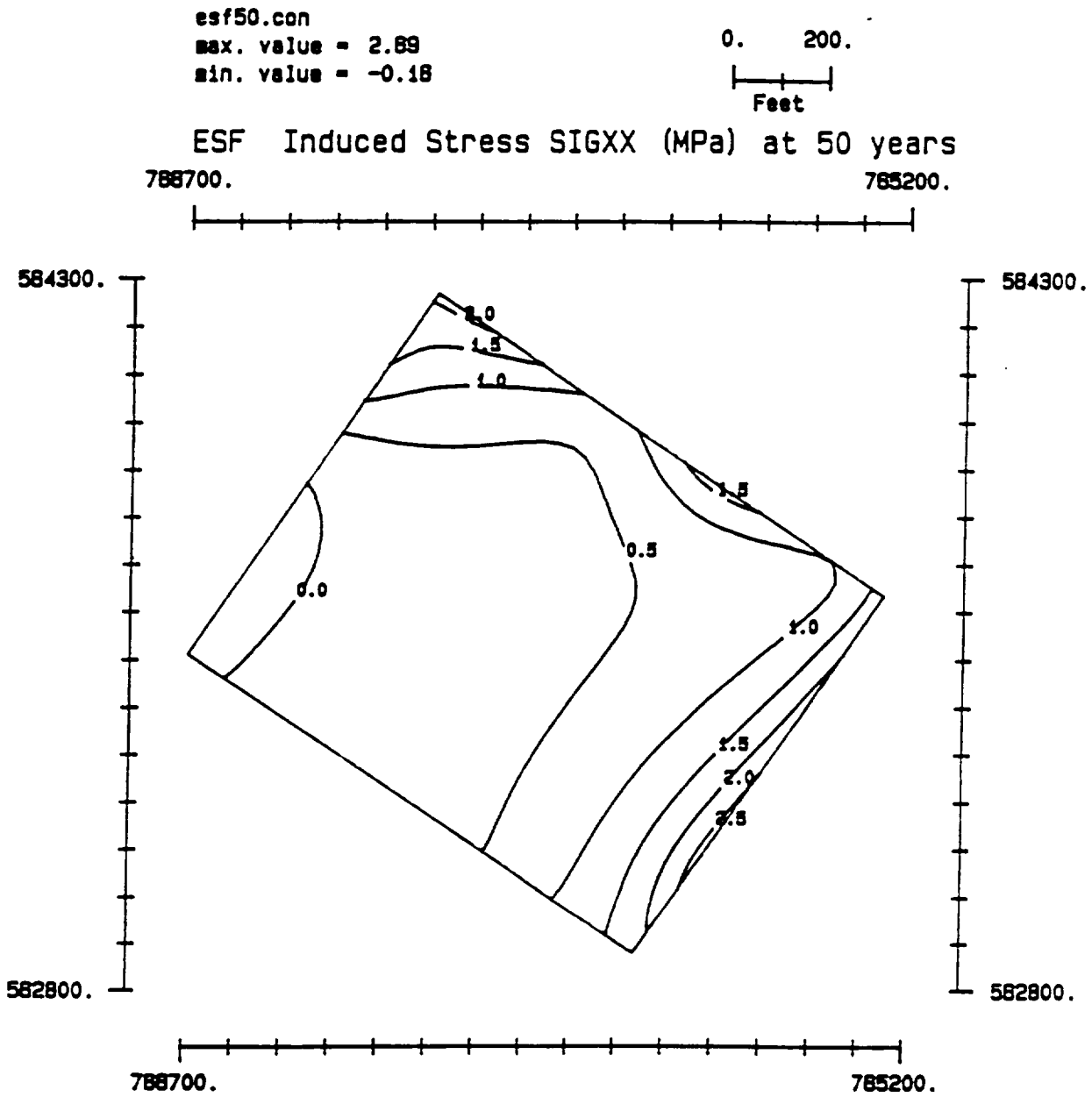

Figure B-13. Exploratory Shaft Facility: Changes in Normal Stress σ_{xx} 50 Years After Waste Emplacement Begins

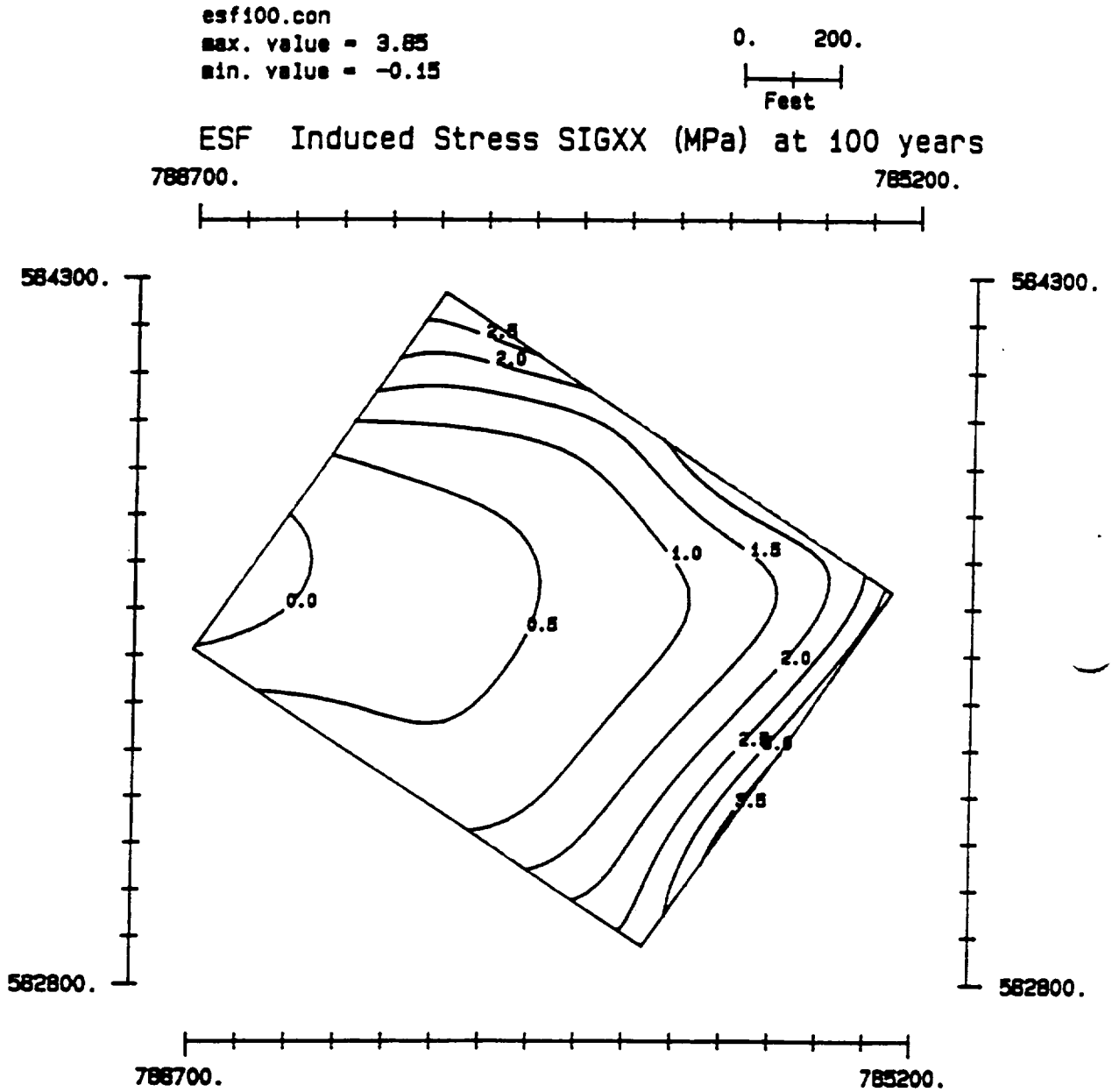

Figure B-14. Exploratory Shaft Facility: Changes in Normal Stress σ_{xx} 100 Years After Waste Emplacement Begins

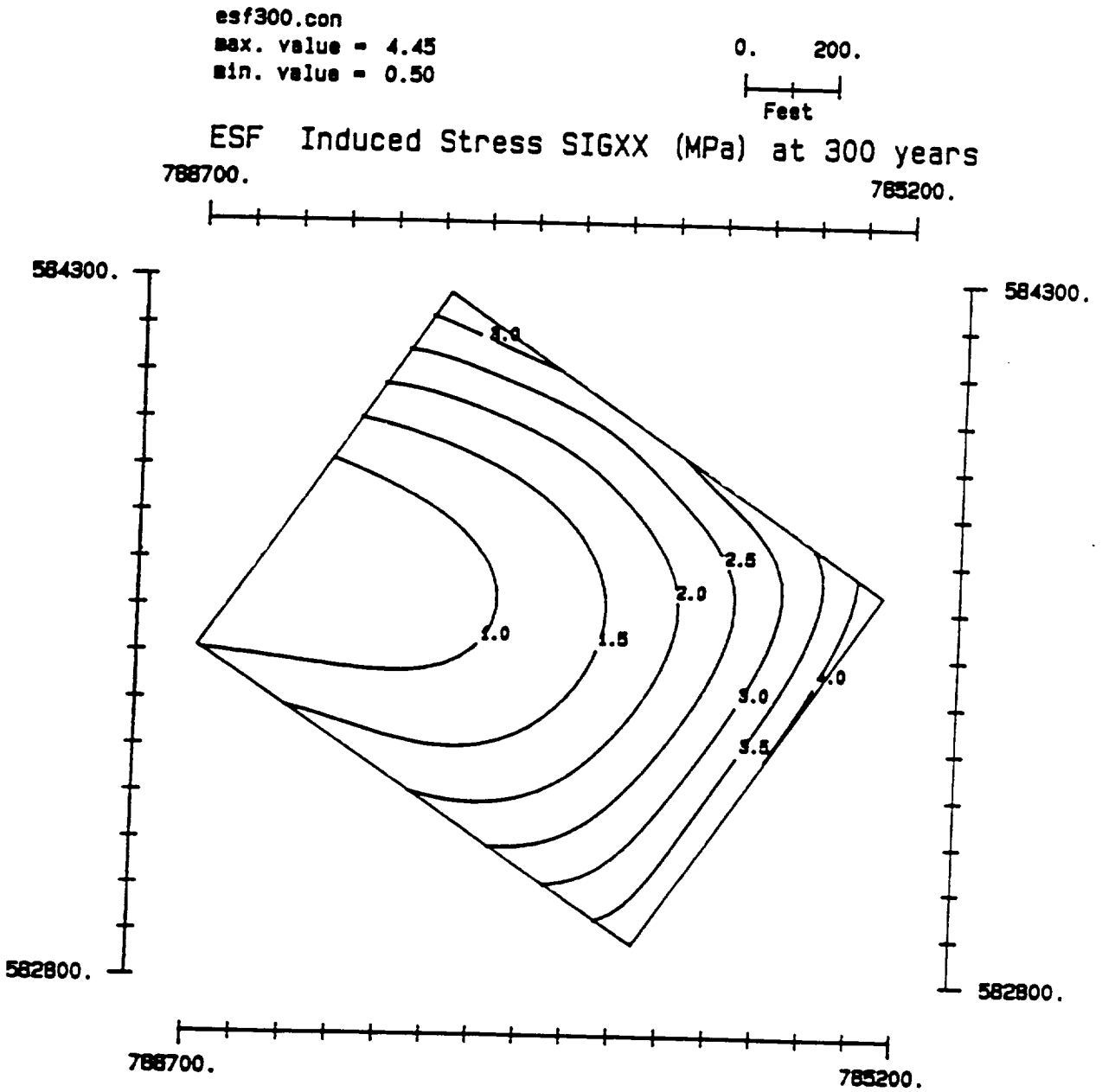

Figure B-15. Exploratory Shaft Facility: Changes in Normal Stress σ_{xx} 300 Years After Waste Emplacement Begins

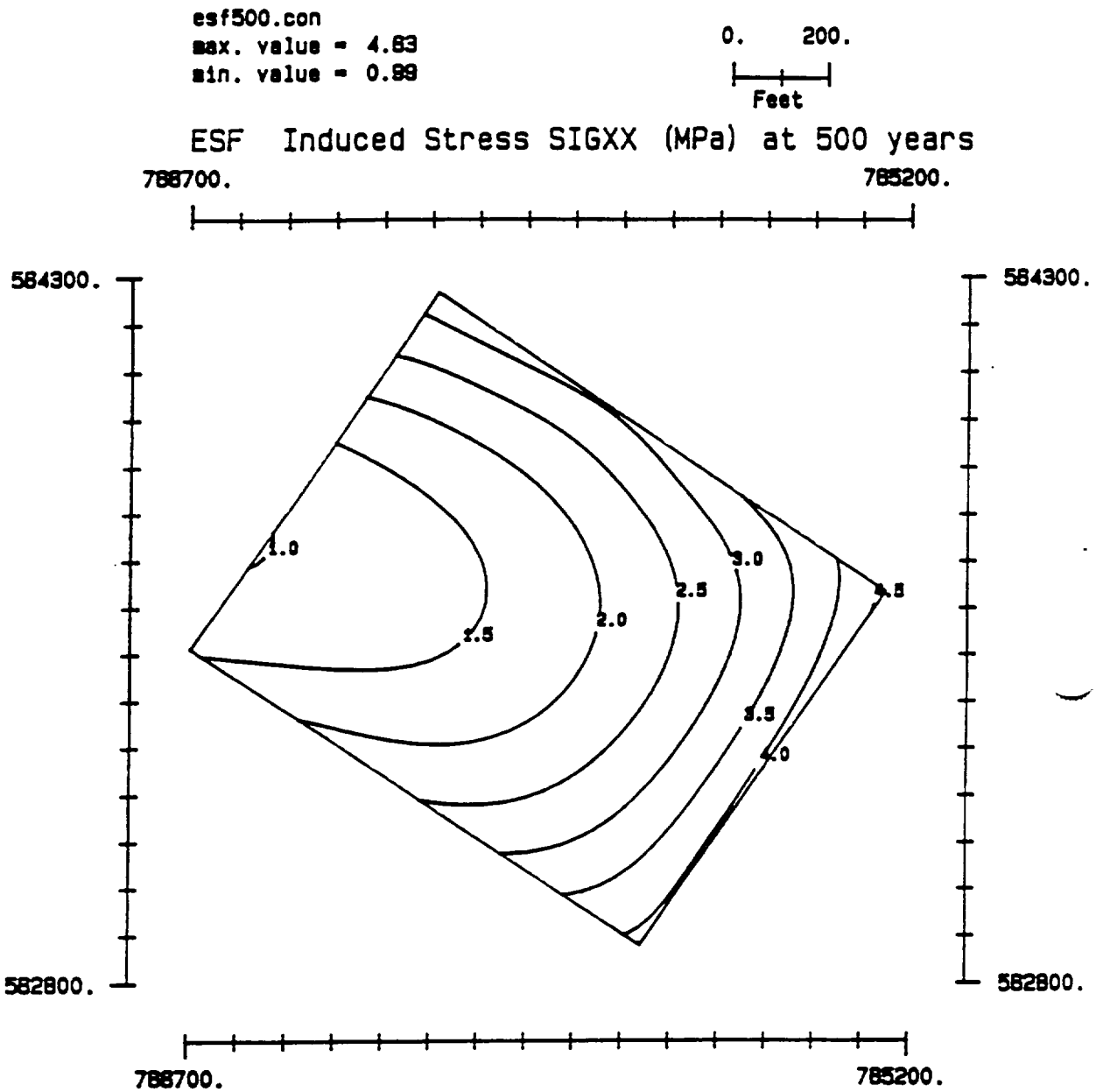

Figure B-16. Exploratory Shaft Facility: Changes in Normal Stress σ_{xx} 500 Years After Waste Emplacement Begins

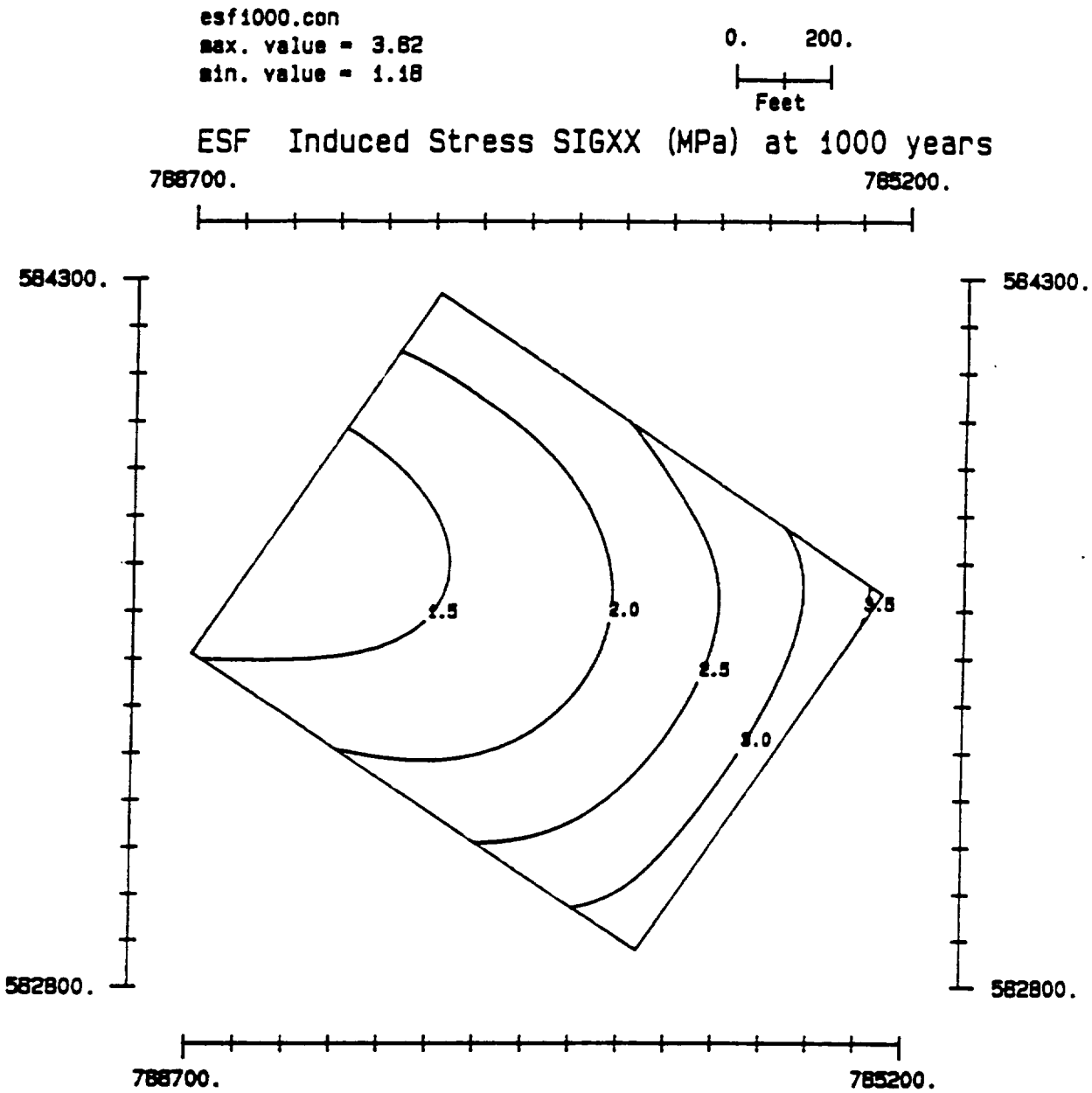

Figure B-17. Exploratory Shaft Facility: Changes in Normal Stress σ_{xx} 1,000 Years After Waste Emplacement Begins

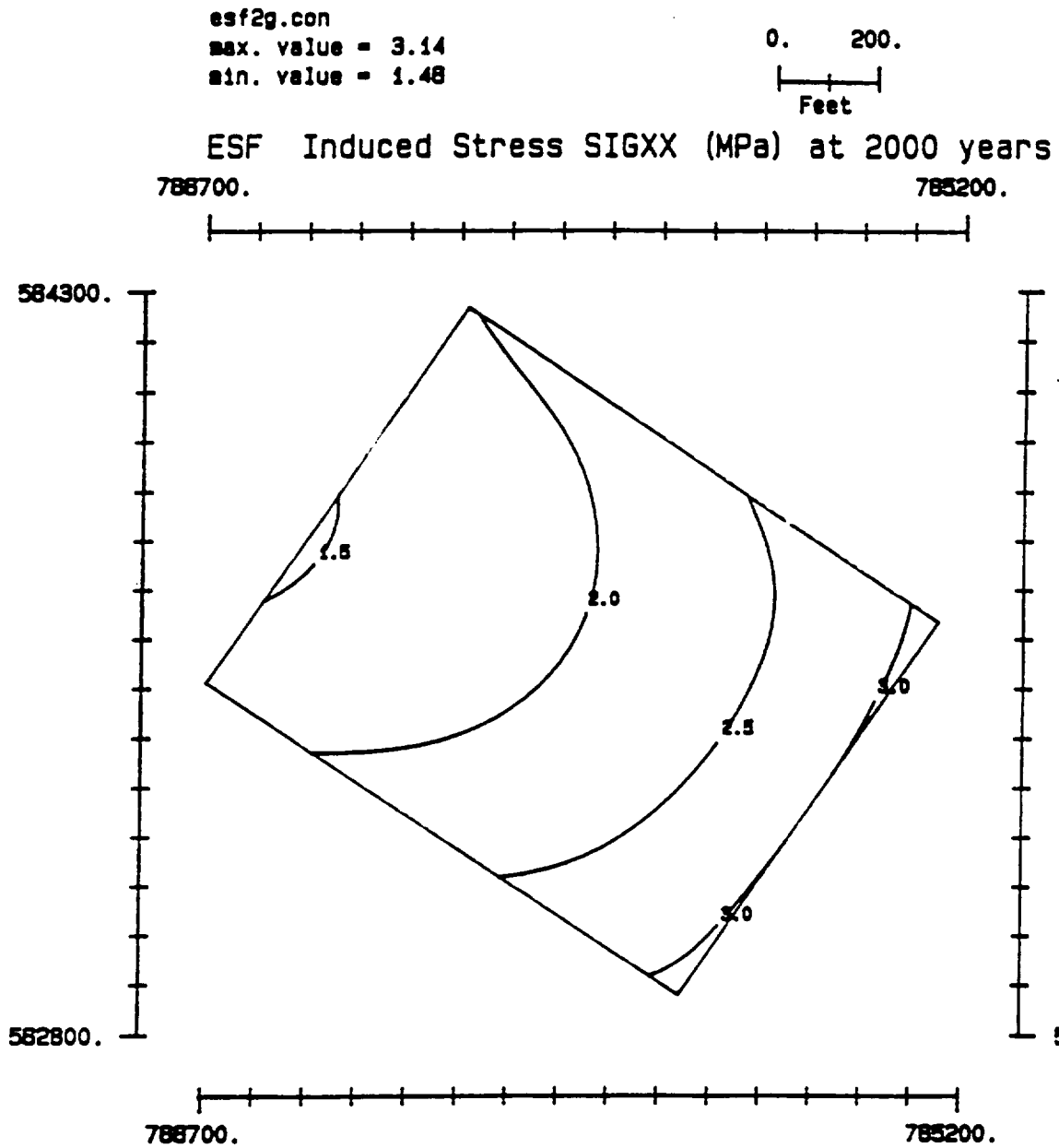

Figure B-18. Exploratory Shaft Facility: Changes in Normal Stress σ_{xx} 2,000 Years After Waste Emplacement Begins

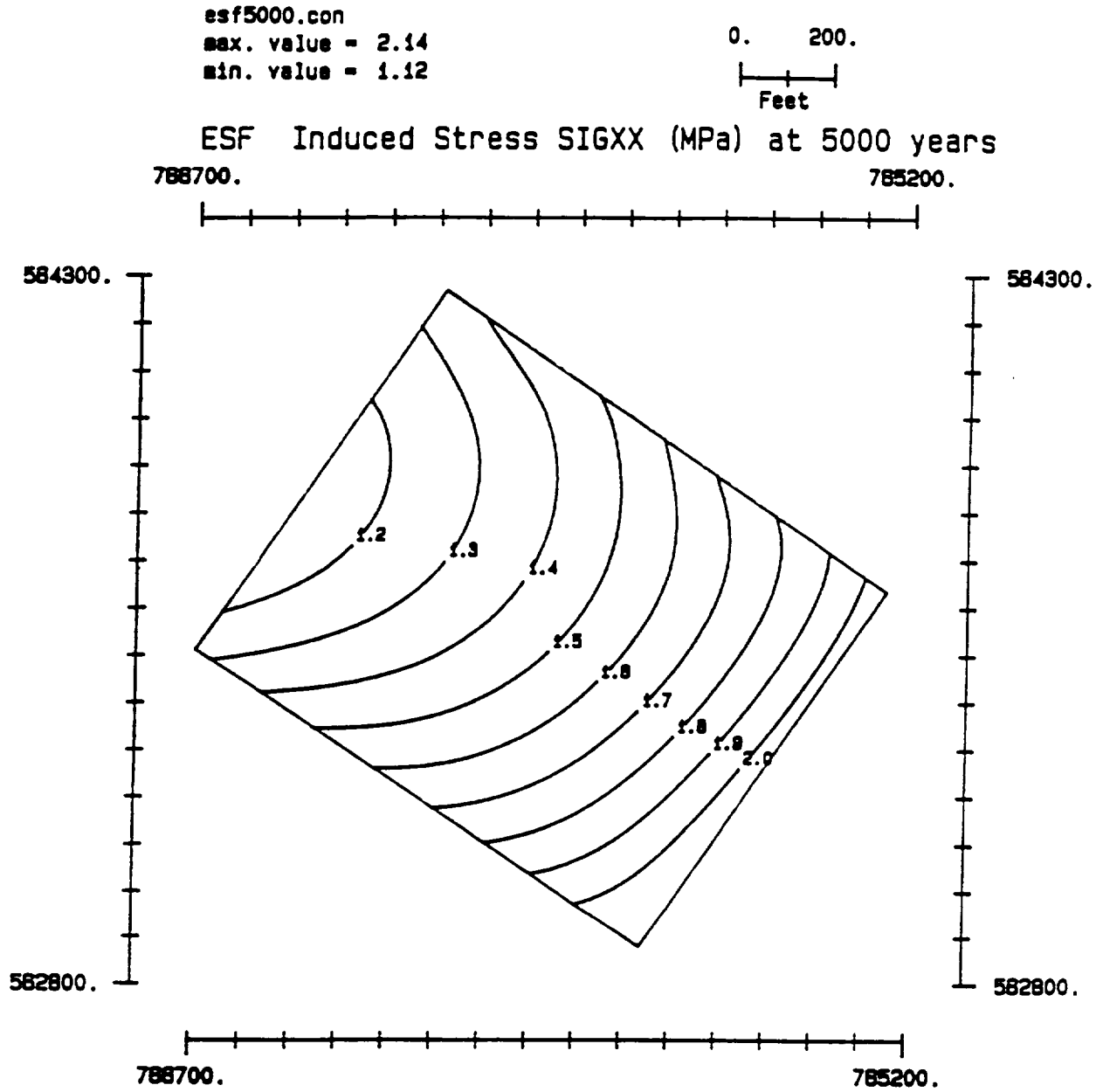

Figure B-19. Exploratory Shaft Facility: Changes in Normal Stress σ_{xx} 5,000 Years After Waste Emplacement Begins

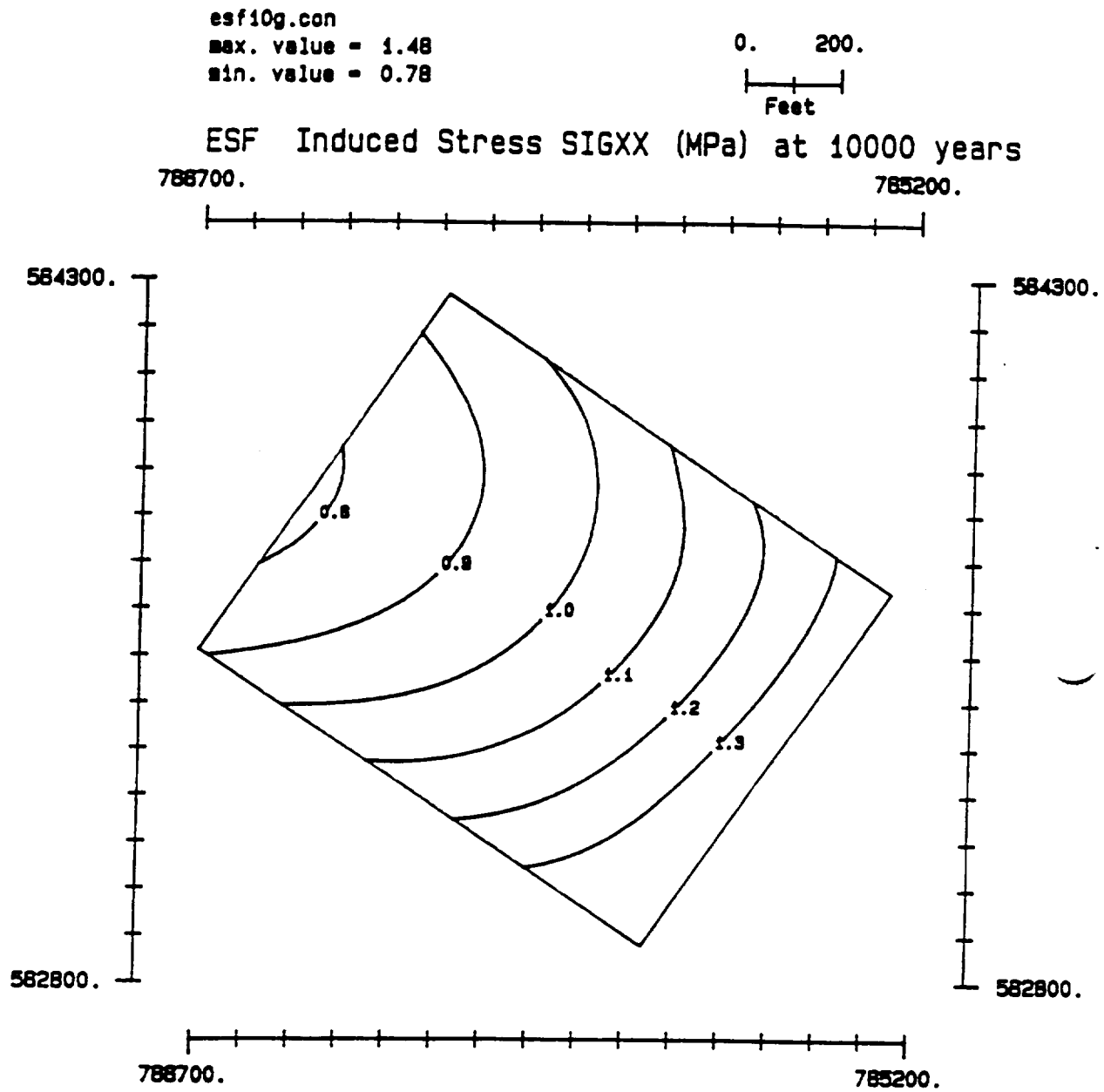

Figure B-20. Exploratory Shaft Facility: Changes in Normal Stress σ_{xx} 10,000 Years After Waste Emplacement Begins

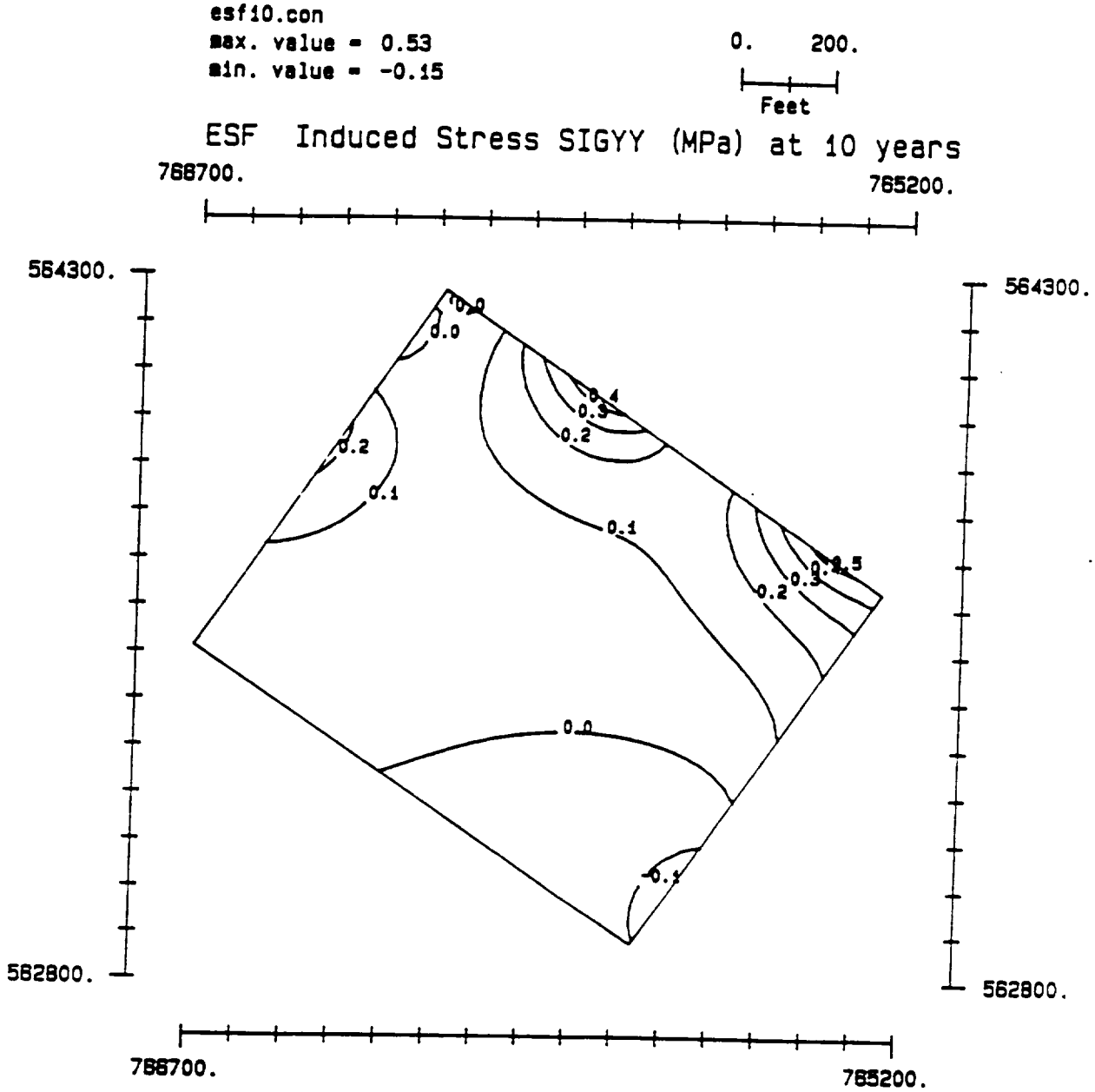

Figure B-21. Exploratory Shaft Facility: Changes in Normal Stress σ_{yy} 10 Years After Waste Emplacement Begins

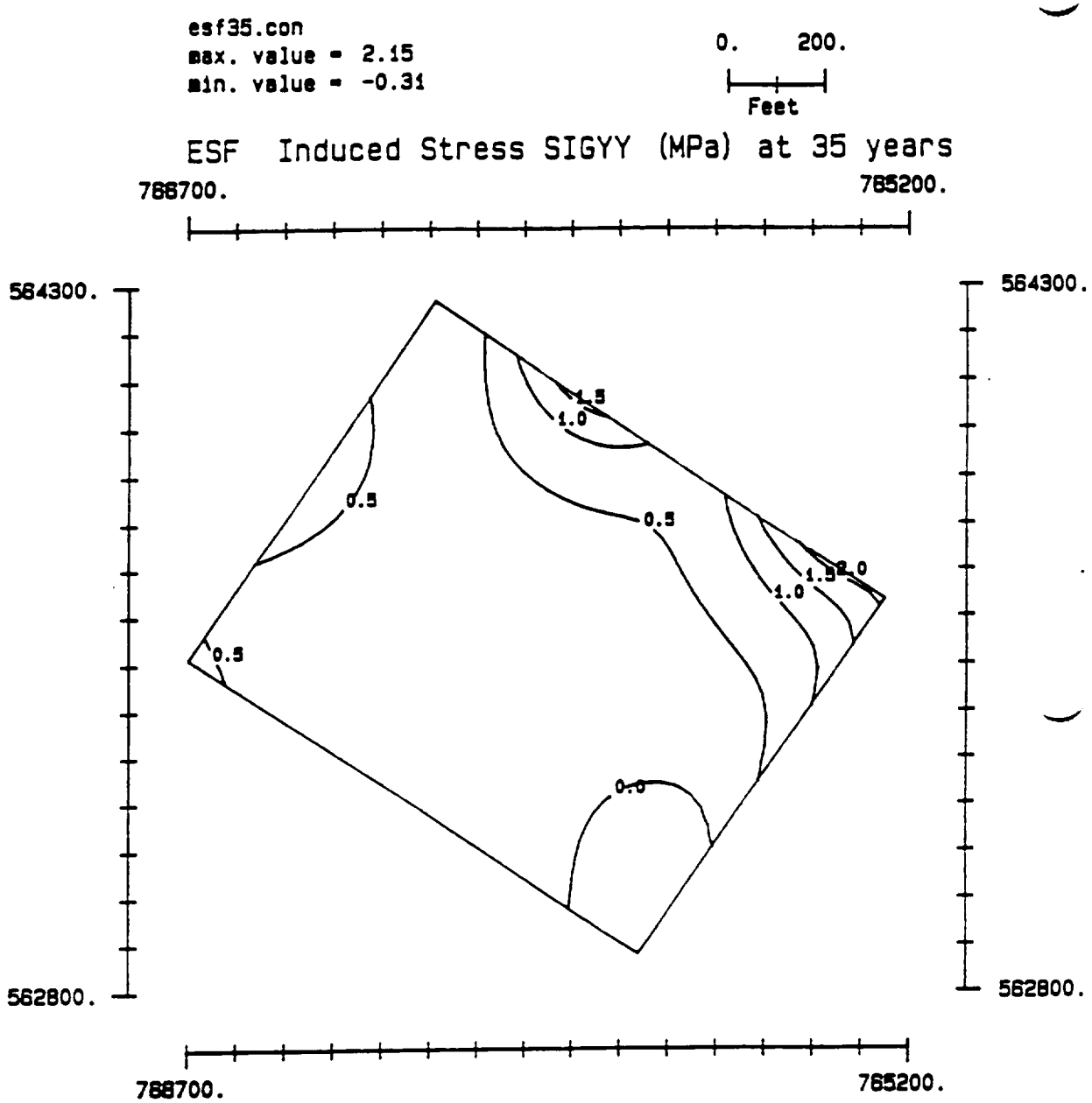

Figure B-22. Exploratory Shaft Facility: Changes in Normal Stress σ_{yy} 35 Years After Waste Emplacement Begins

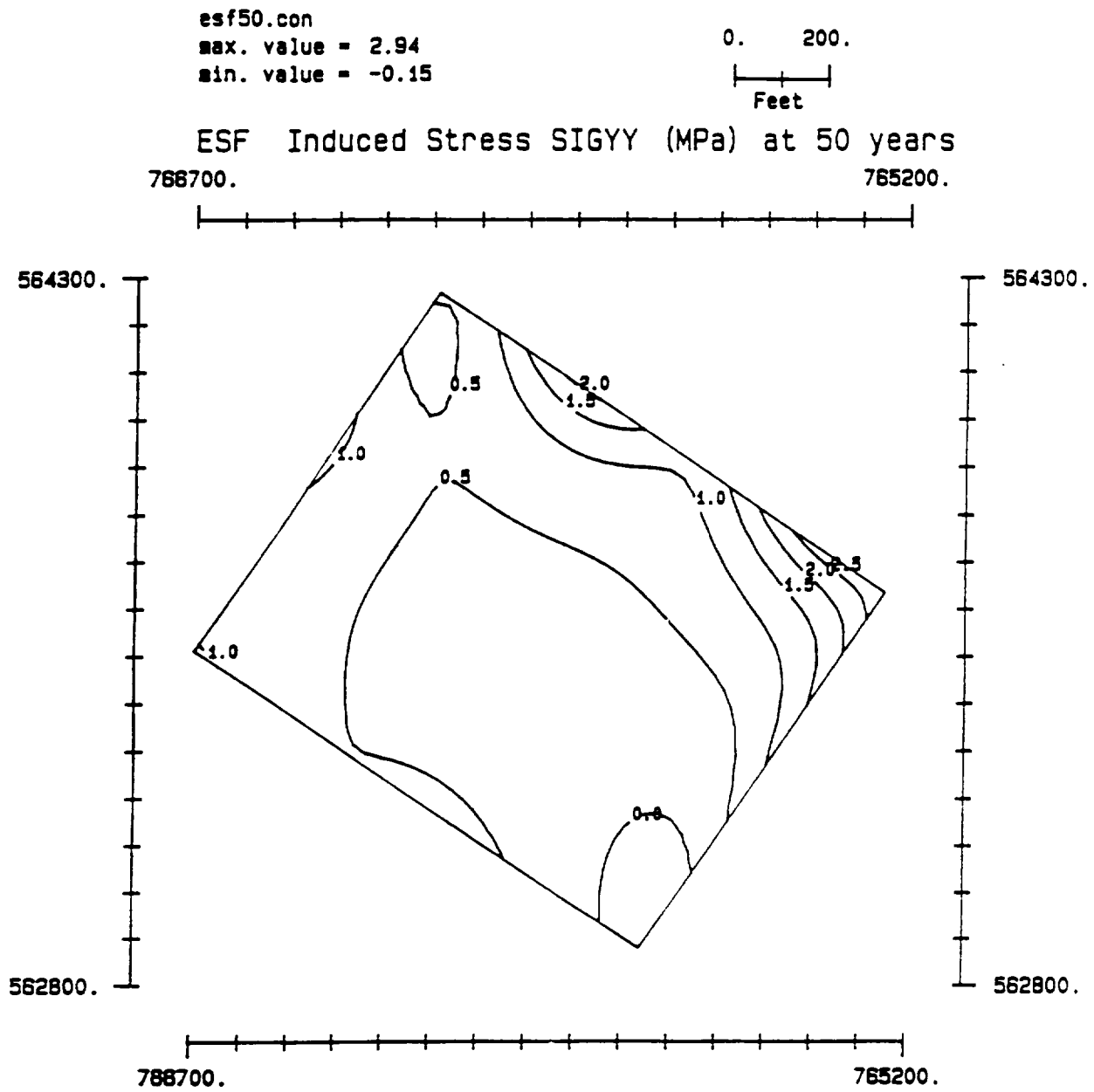

Figure B-23. Exploratory Shaft Facility: Changes in Normal Stress σ_{yy} 50 Years After Waste Emplacement Begins

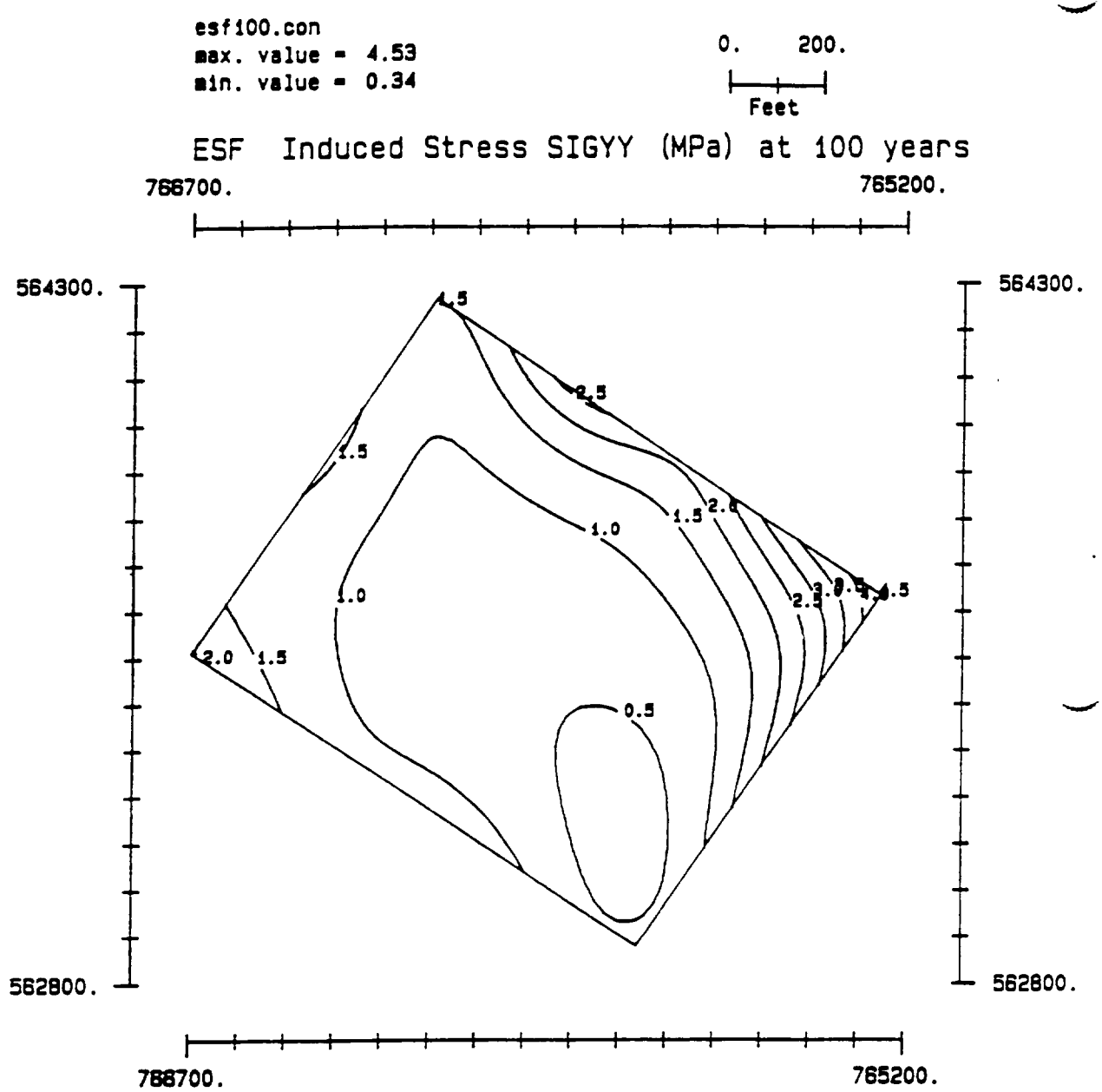

Figure B-24. Exploratory Shaft Facility: Changes in Normal Stress σ_{yy} 100 Years After Waste Emplacement Begins

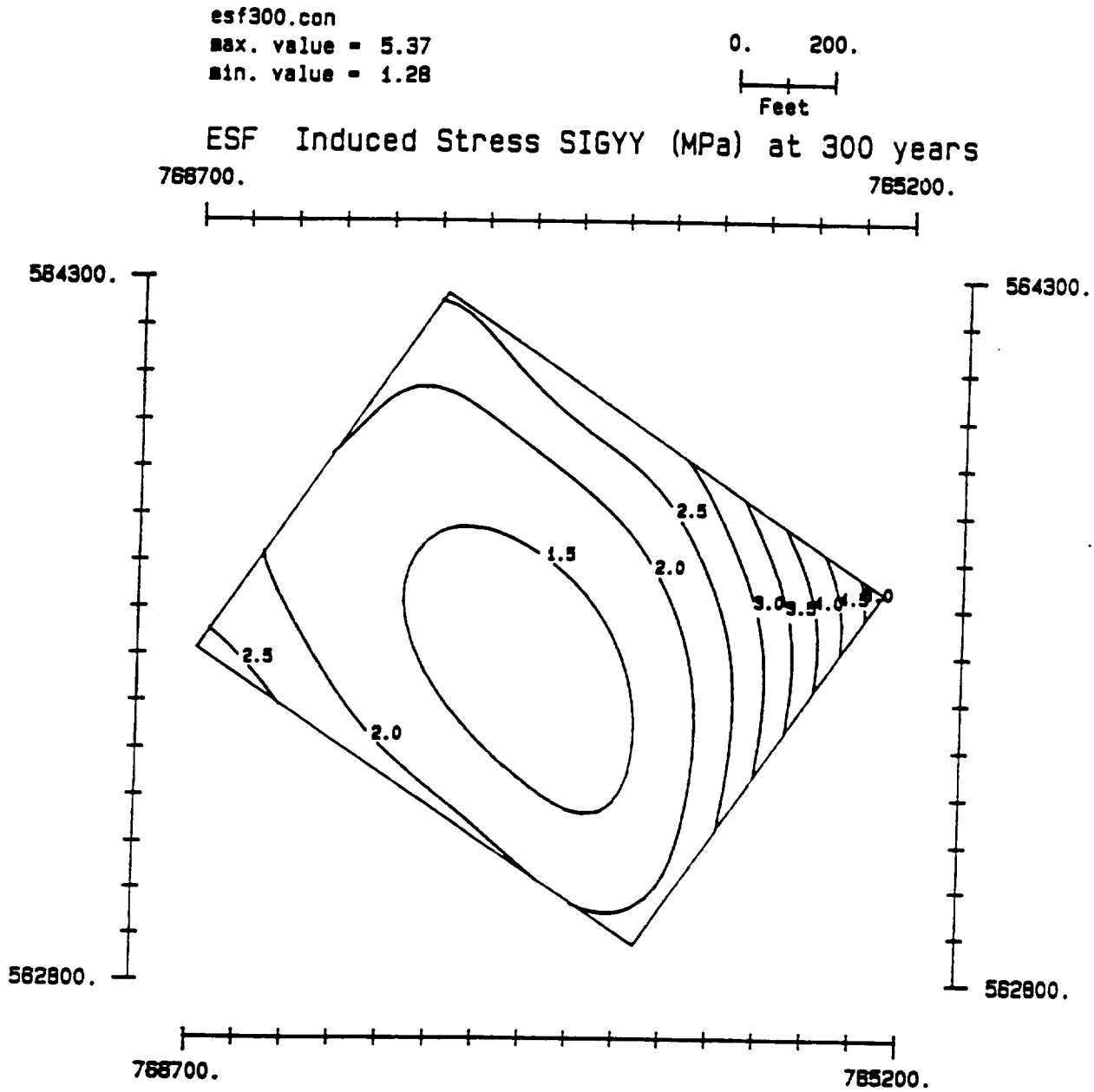

Figure B-25. Exploratory Shaft Facility: Changes in Normal Stress σ_{yy} 300 Years After Waste Emplacement Begins

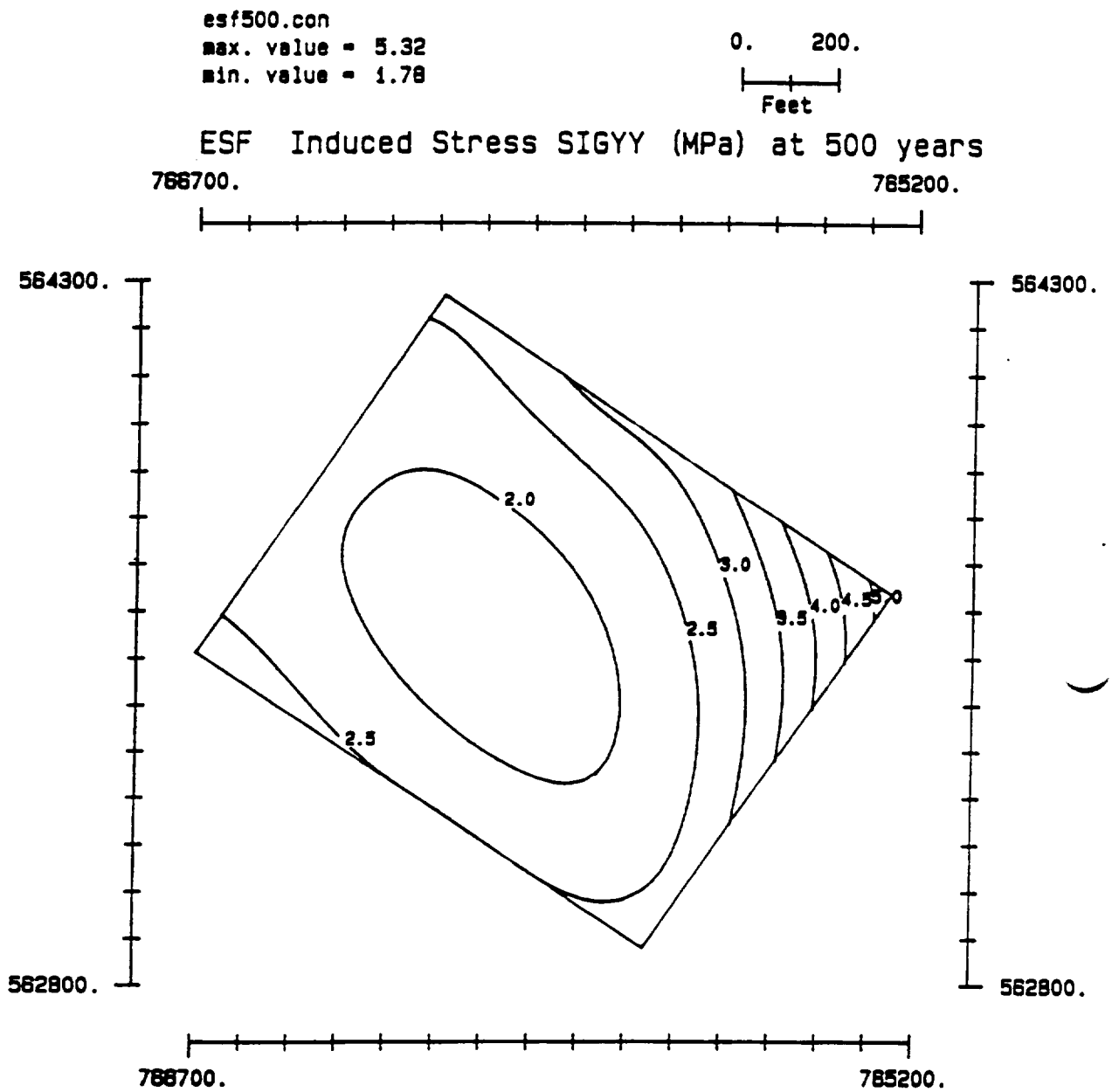

Figure B-26. Exploratory Shaft Facility: Changes in Normal Stress σ_{yy} 500 Years After Waste Emplacement Begins

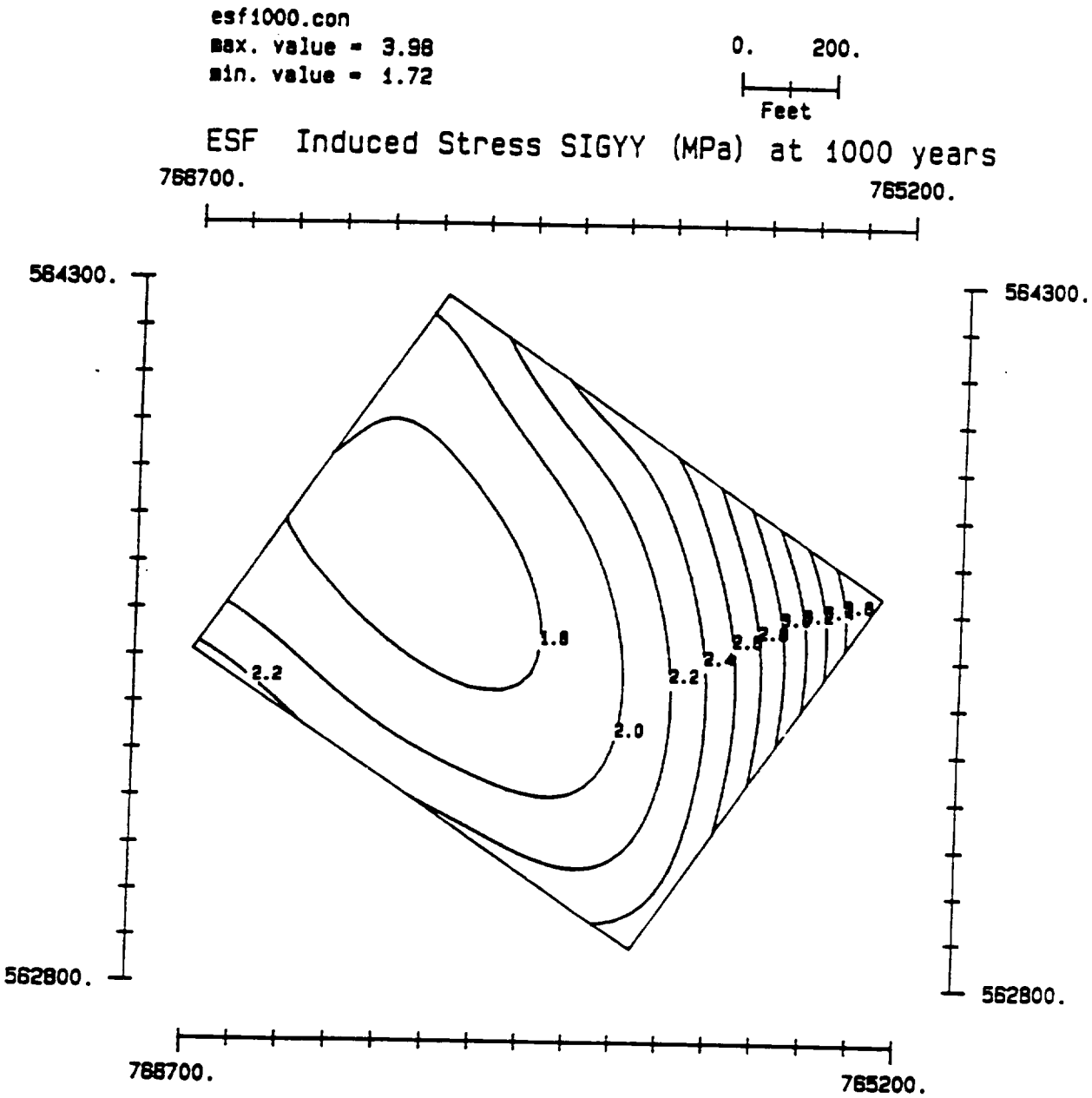

Figure B-27. Exploratory Shaft Facility: Changes in Normal Stress σ_{yy} 1,000 Years After Waste Emplacement Begins

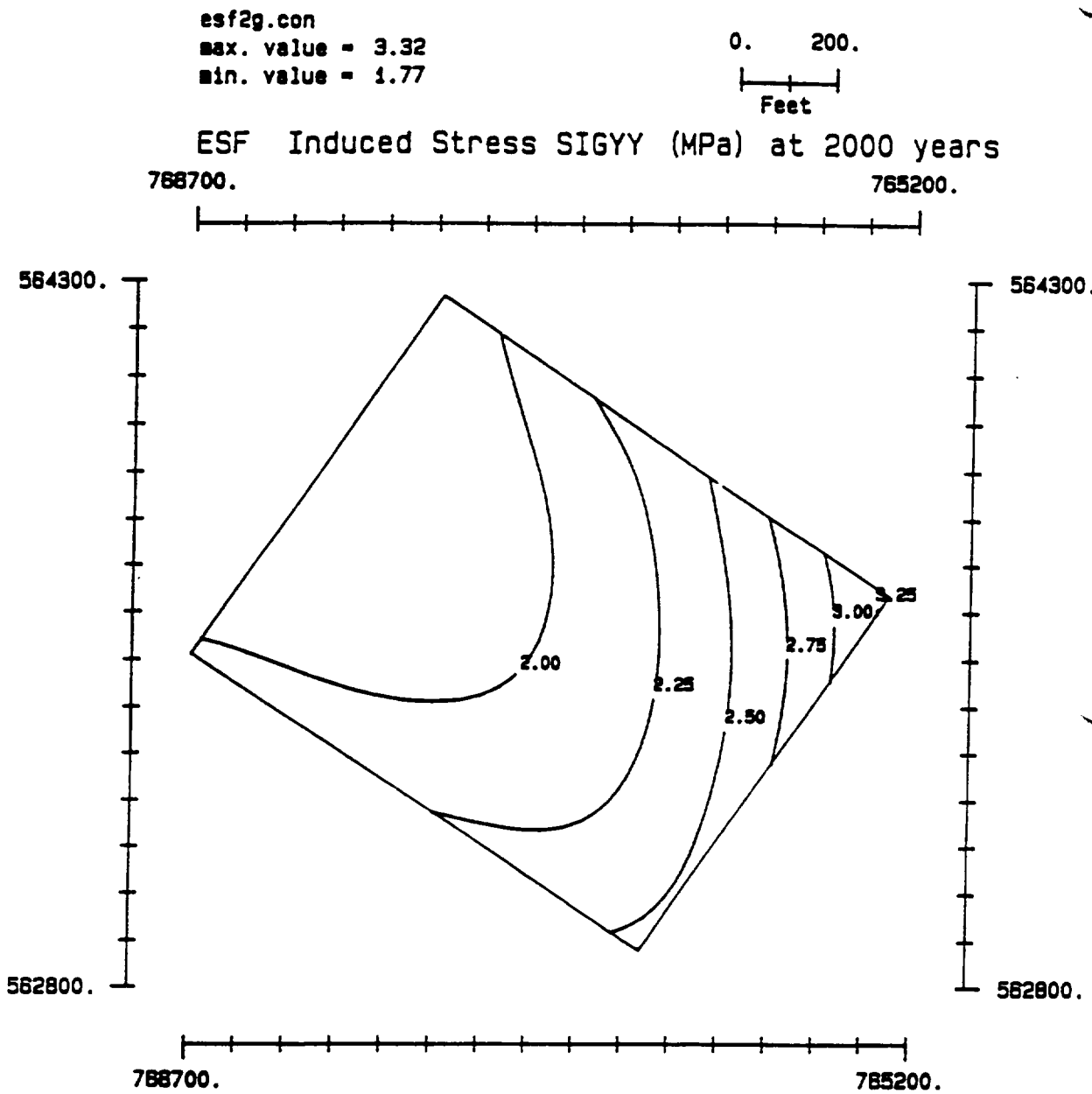

Figure B-28. Exploratory Shaft Facility: Changes in Normal Stress σ_{yy} 2,000 Years After Waste Emplacement Begins

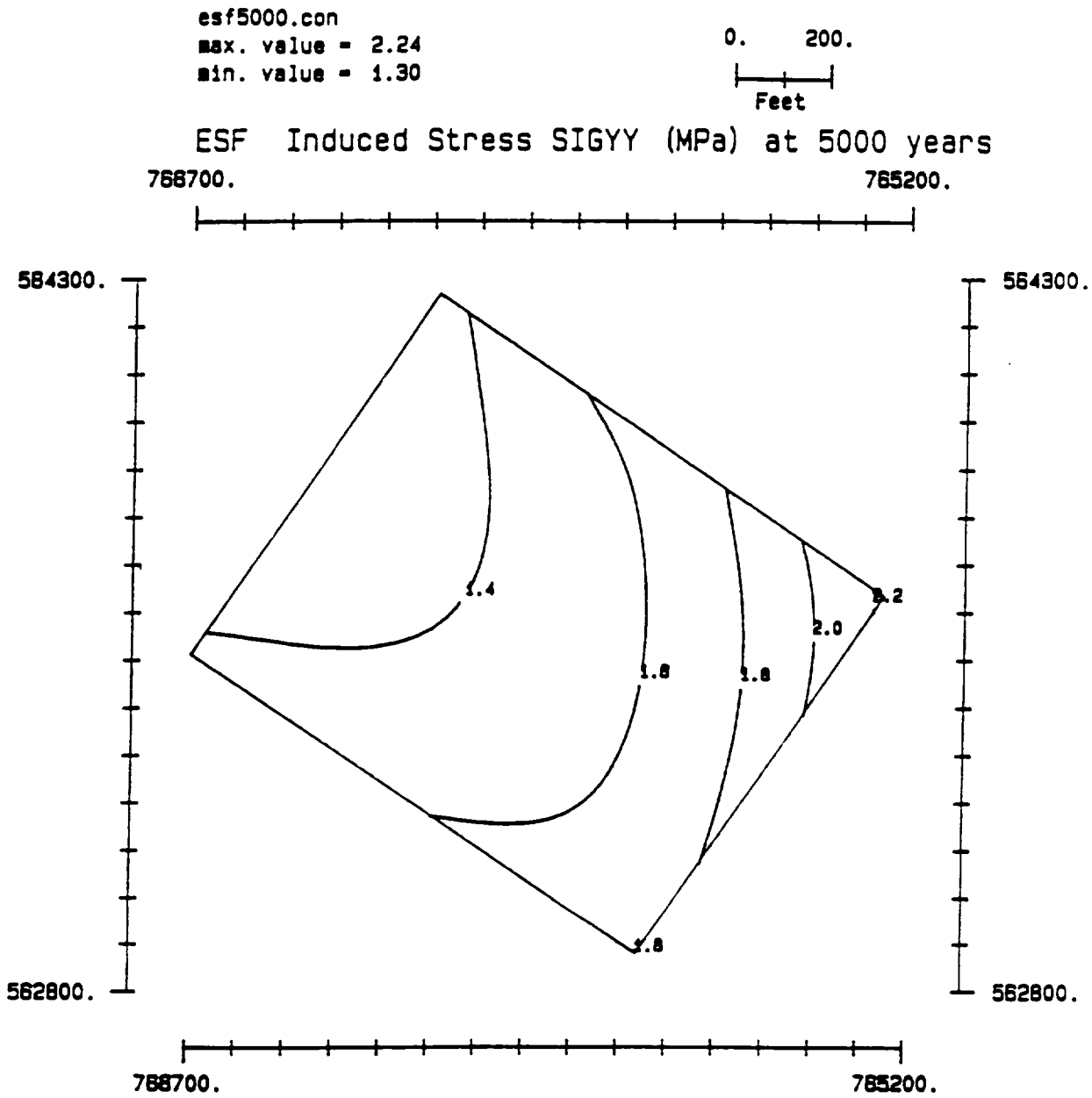

Figure B-29. Exploratory Shaft Facility: Changes in Normal Stress σ_{yy} 5,000 Years After Waste Emplacement Begins

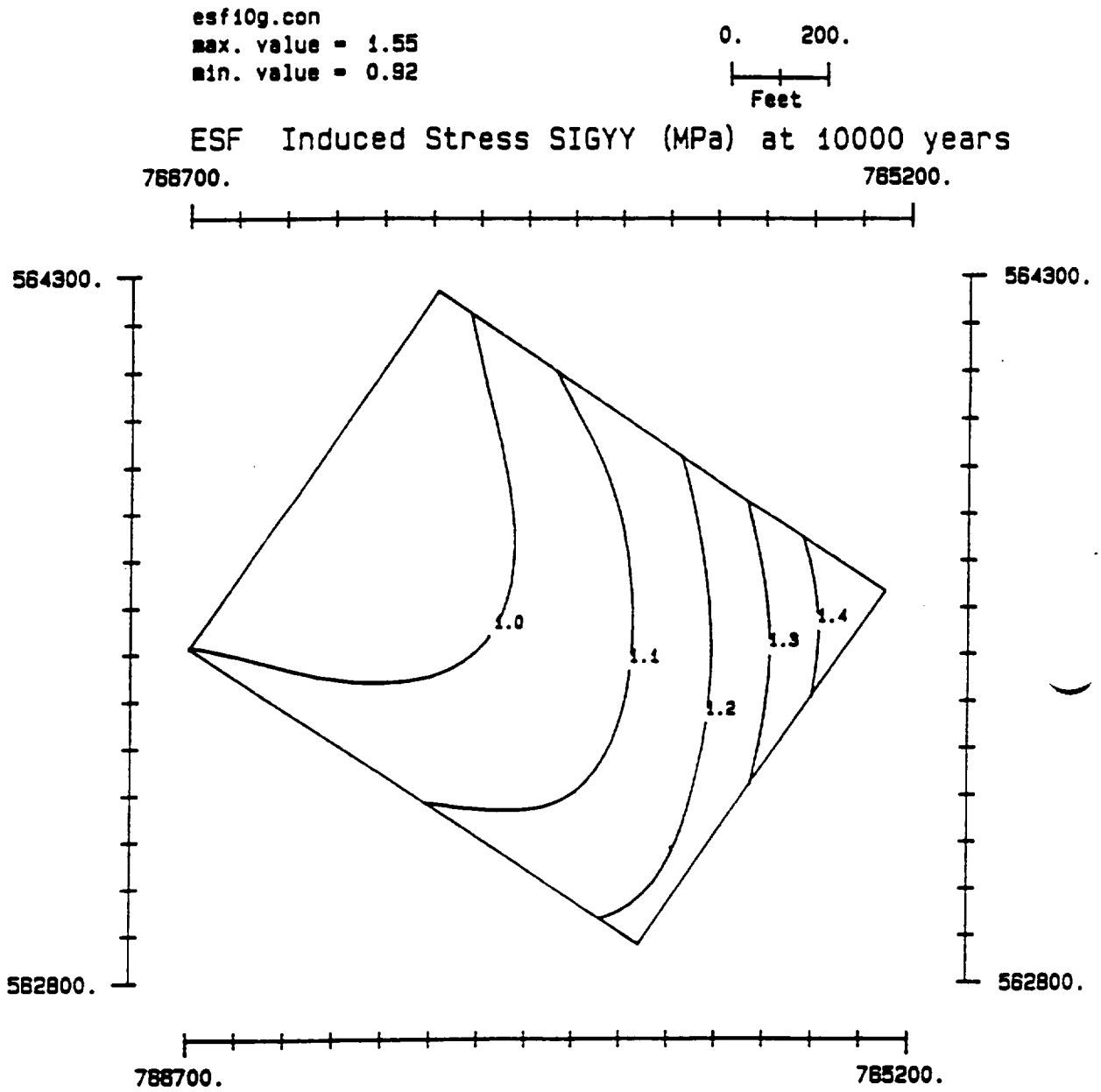

Figure B-30. Exploratory Shaft Facility: Changes in Normal Stress σ_{yy} 10,000 Years After Waste Emplacement Begins

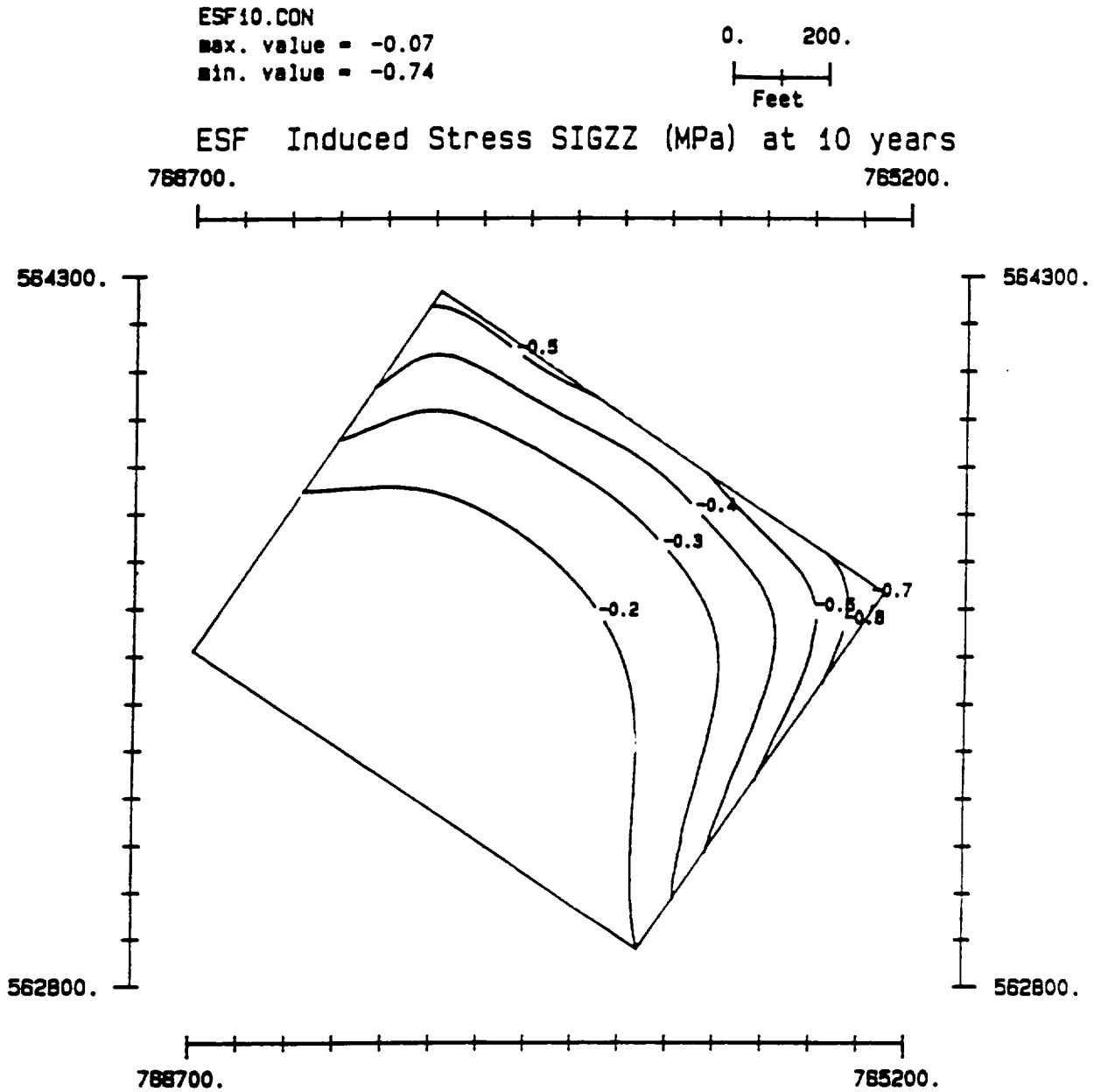

Figure B-31. Exploratory Shaft Facility: Changes in Normal Stress σ_{zz} 10 Years After Waste Emplacement Begins

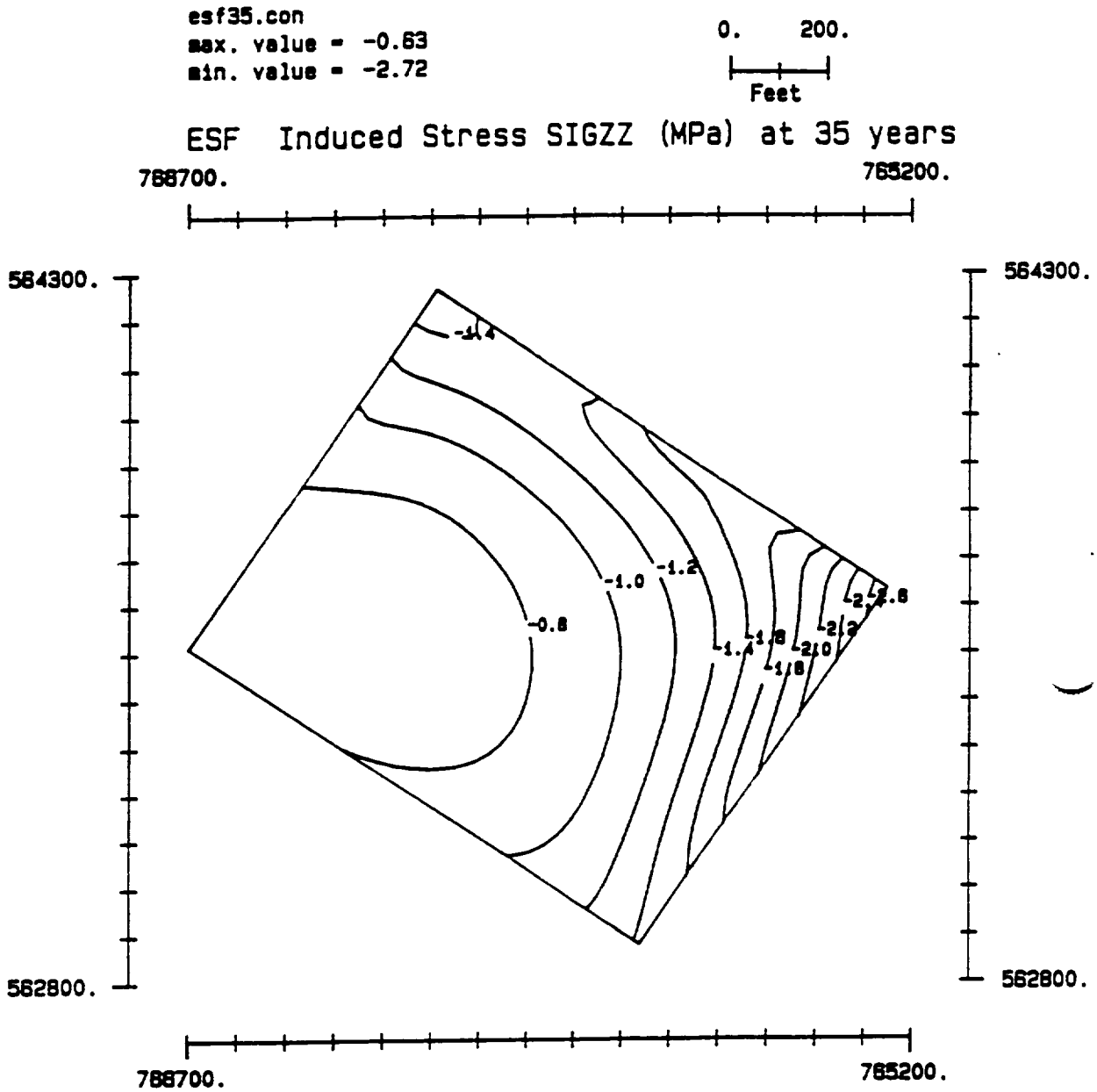

Figure B-32. Exploratory Shaft Facility: Changes in Normal Stress σ_{zz} 35 Years After Waste Emplacement Begins

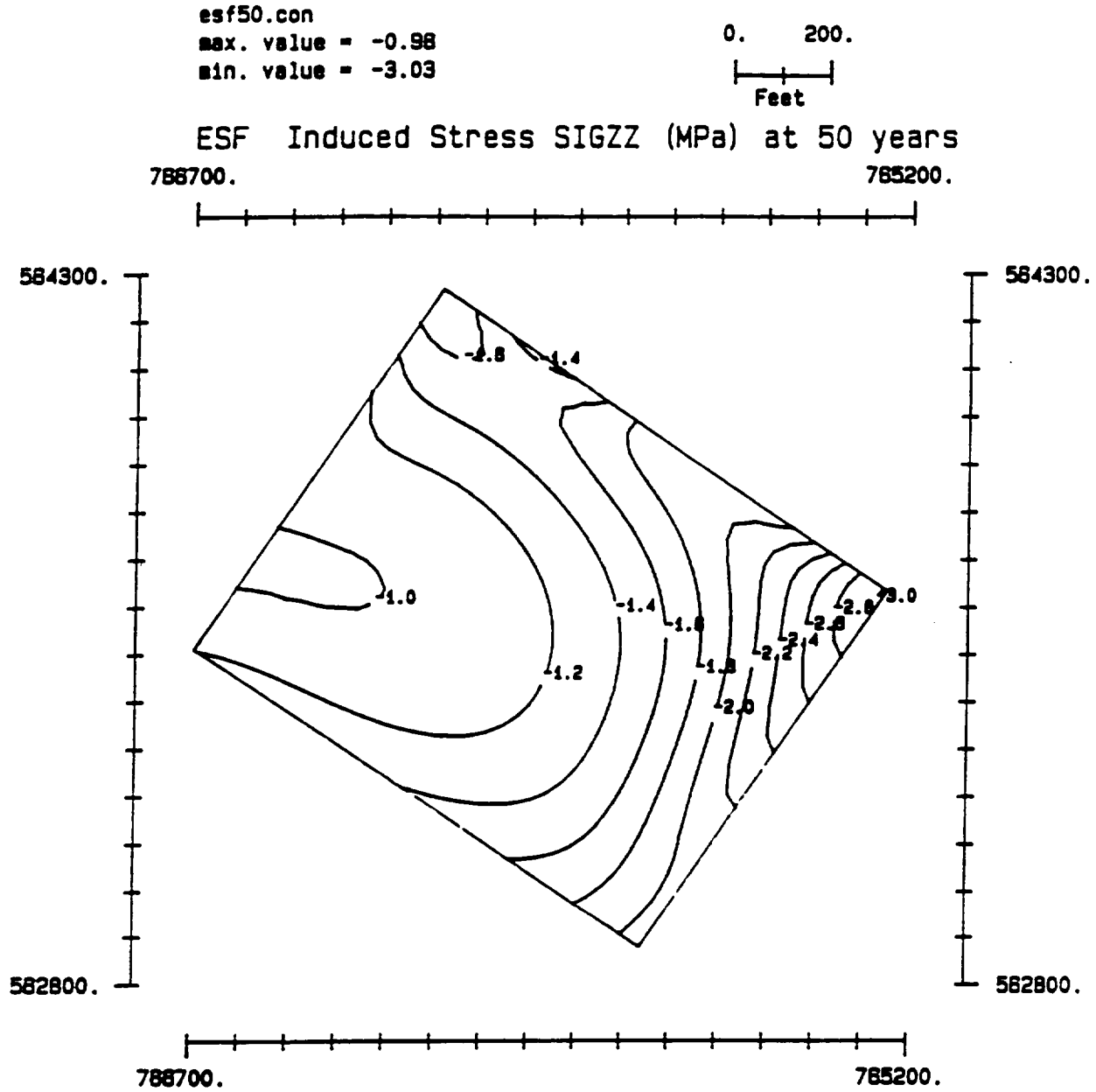

Figure B-33. Exploratory Shaft Facility: Changes in Normal Stress σ_{zz} 50 Years After Waste Emplacement Begins

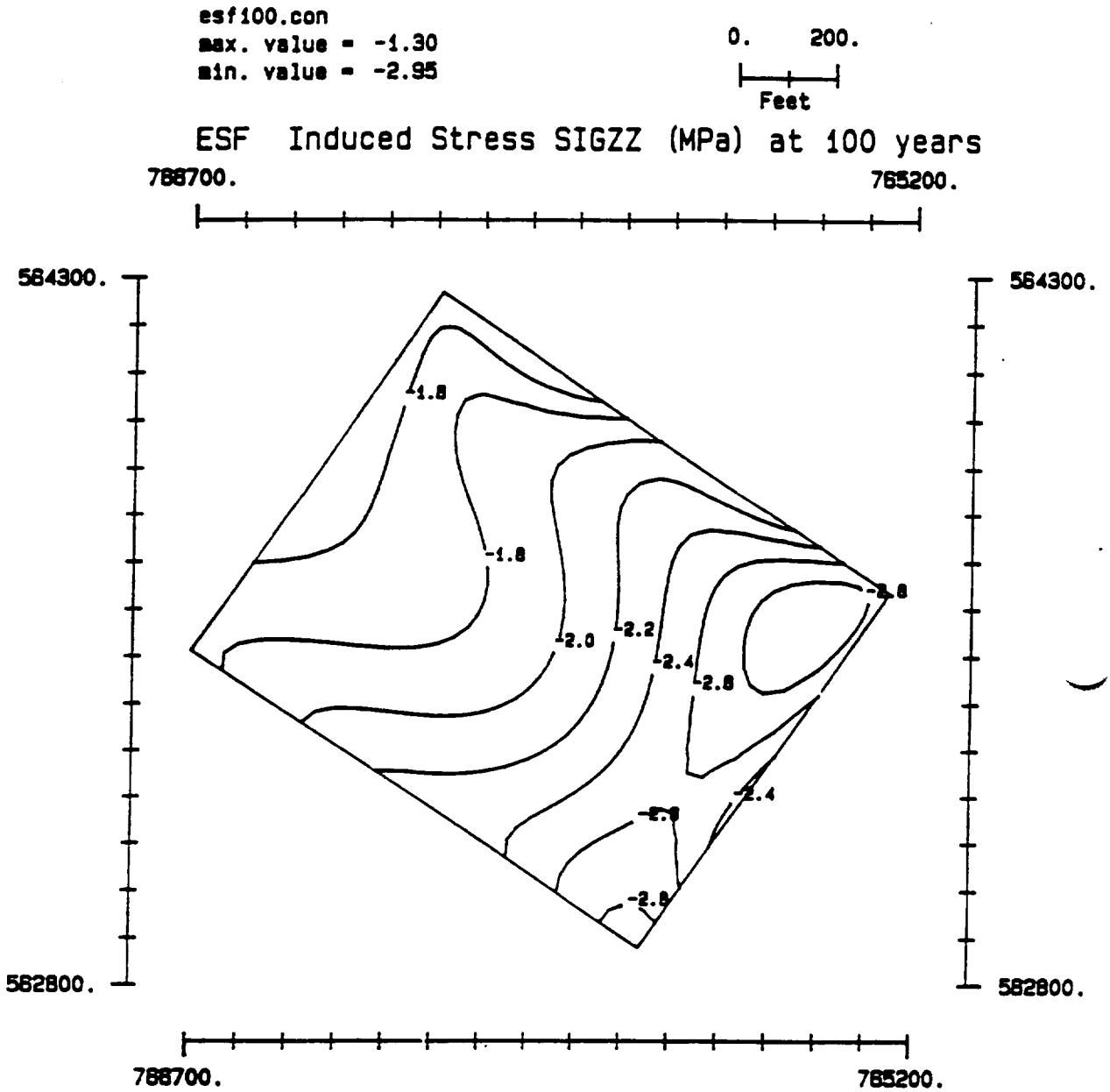

Figure B-34. Exploratory Shaft Facility: Changes in Normal Stress σ_{zz} 100 Years After Waste Emplacement Begins

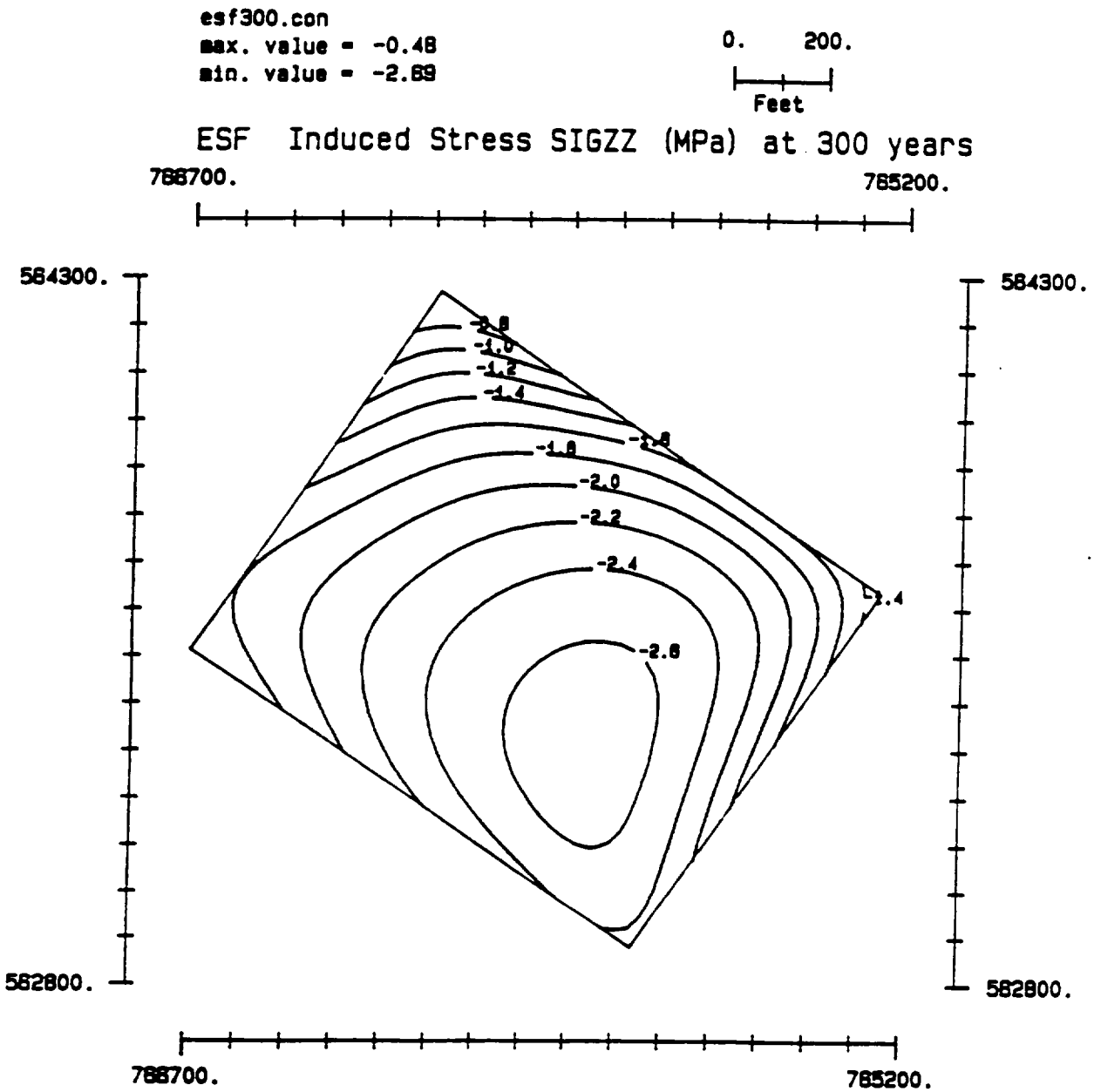

Figure B-35. Exploratory Shaft Facility: Changes in Normal Stress σ_{zz} 300 Years After Waste Emplacement Begins

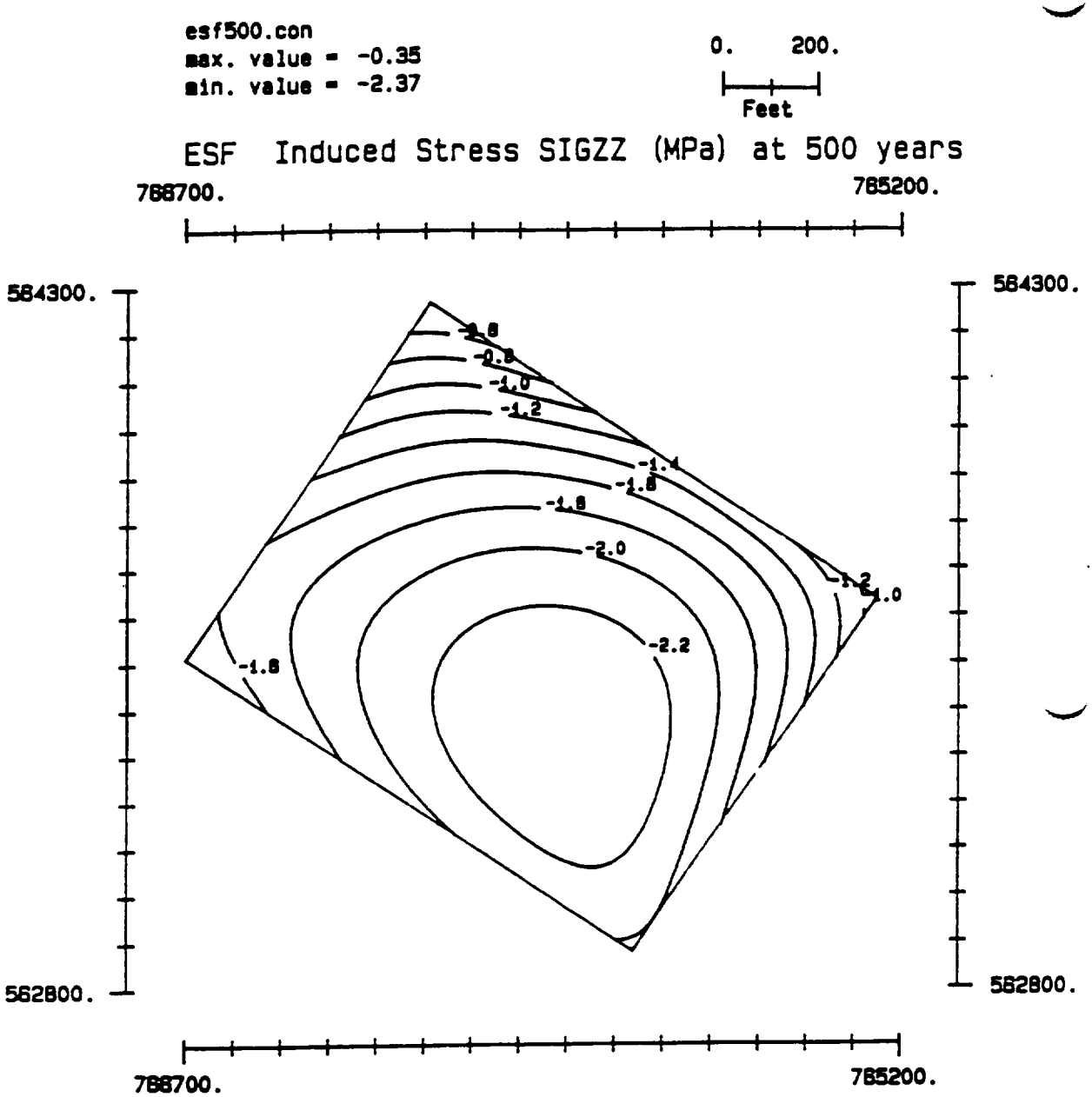

Figure B-36. Exploratory Shaft Facility: Changes in Normal Stress σ_{zz} 500 Years After Waste Emplacement Begins

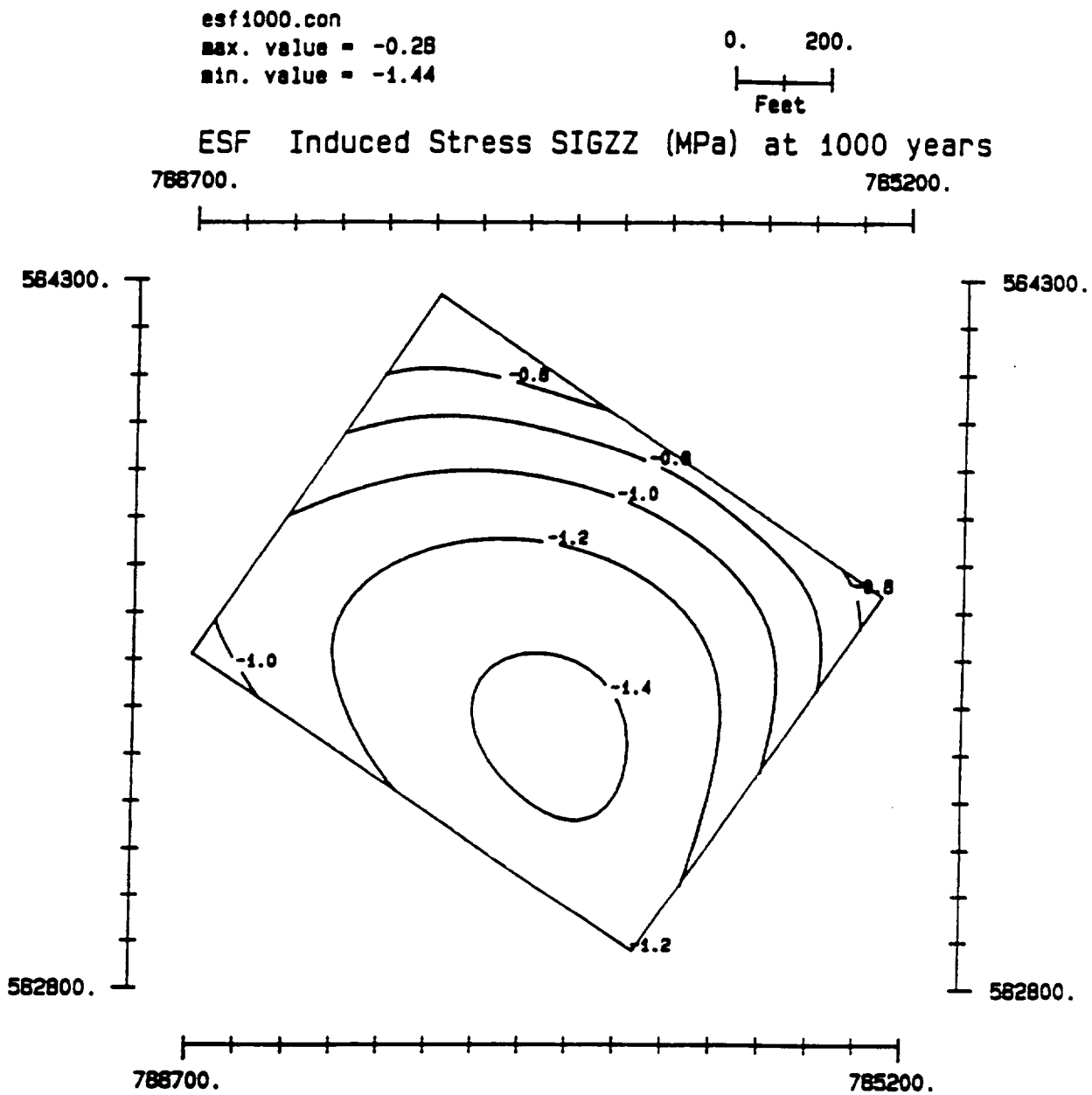

Figure B-37. Exploratory Shaft Facility: Changes in Normal Stress σ_{zz} 1,000 Years After Waste Emplacement Begins

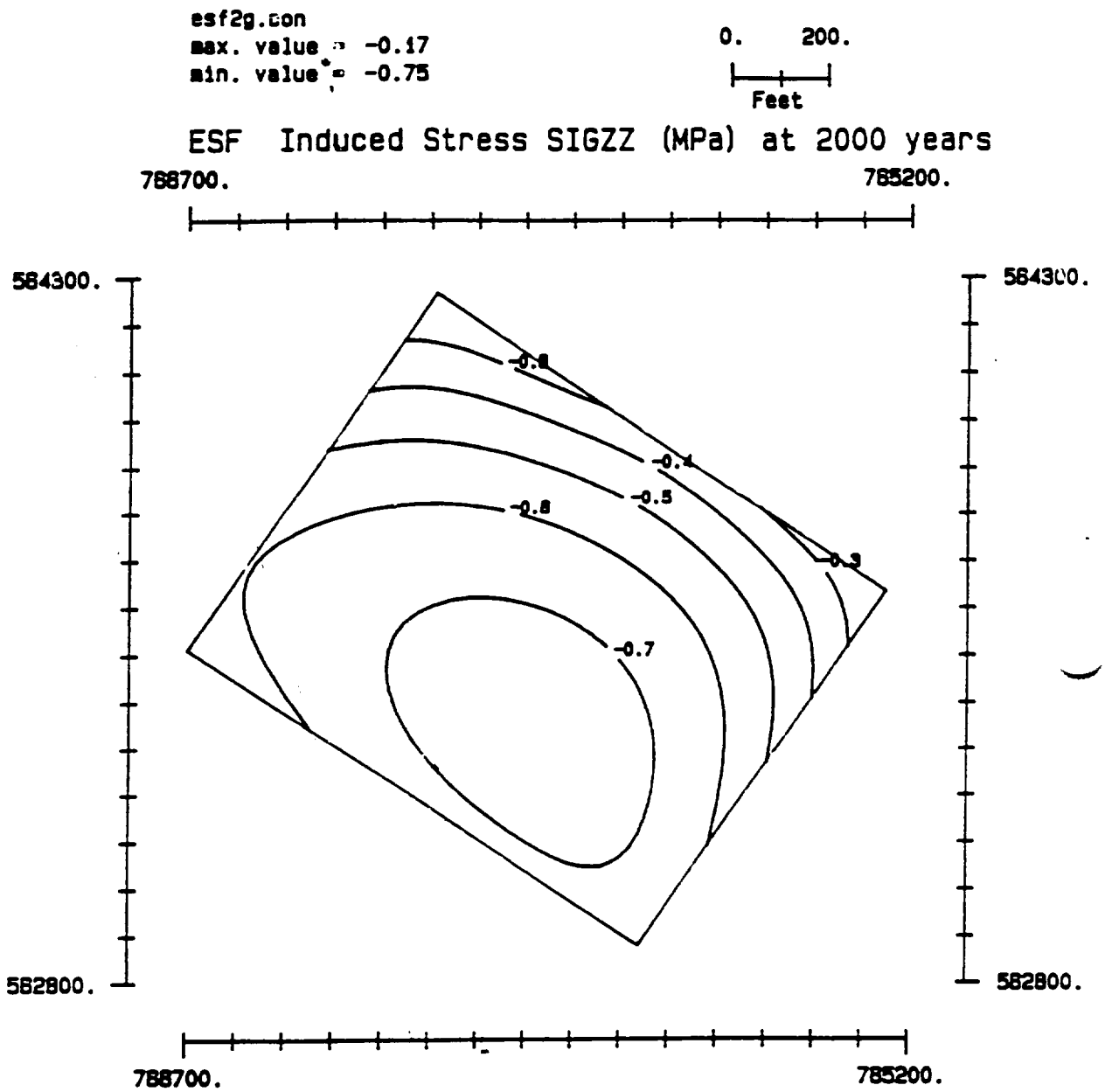

Figure B-38. Exploratory Shaft Facility: Changes in Normal Stress σ_{zz} 2,000 Years After Waste Emplacement Begins

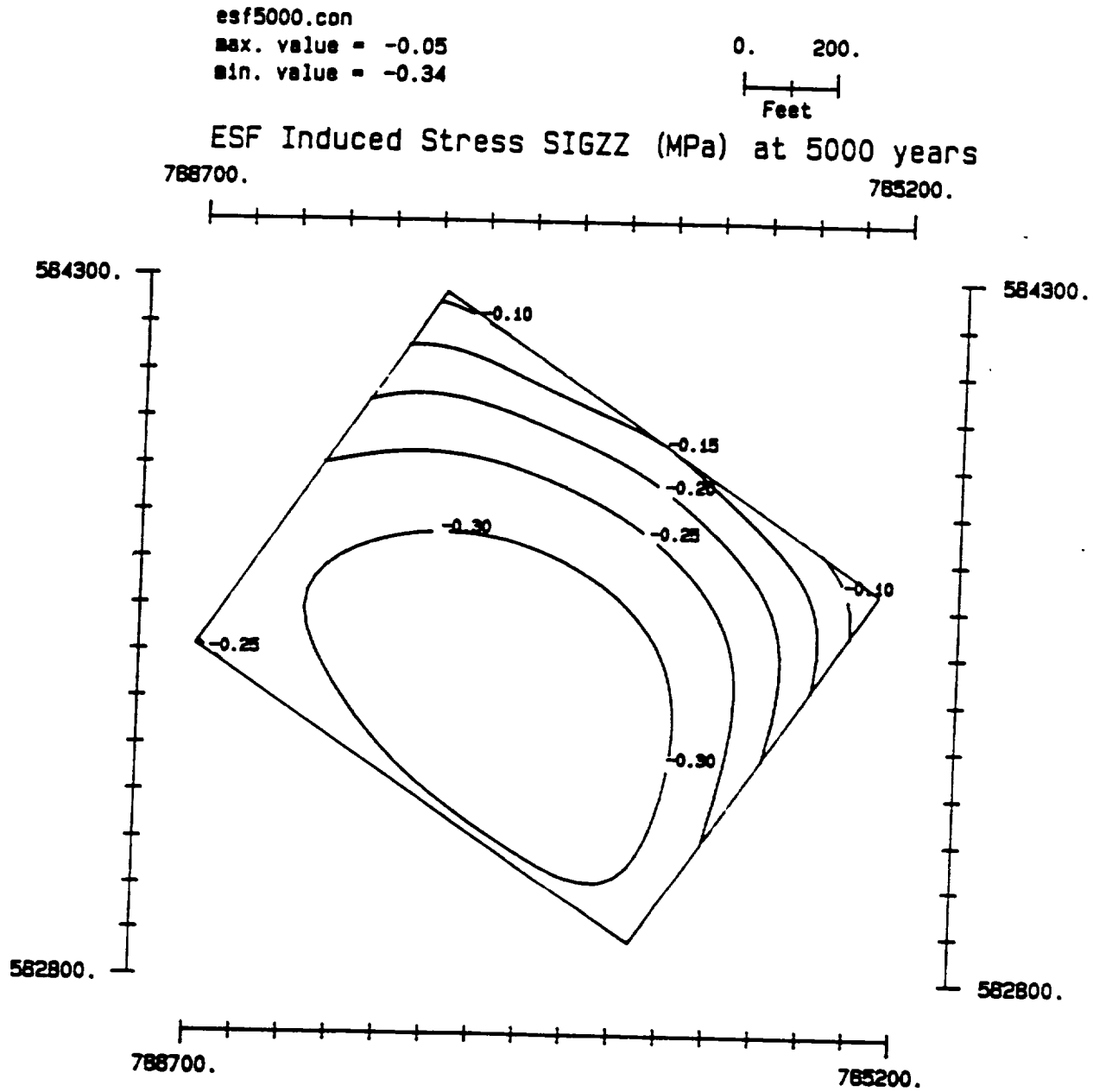

Figure B-39. Exploratory Shaft Facility: Changes in Normal Stress σ_{zz} 5,000 Years After Waste Emplacement Begins

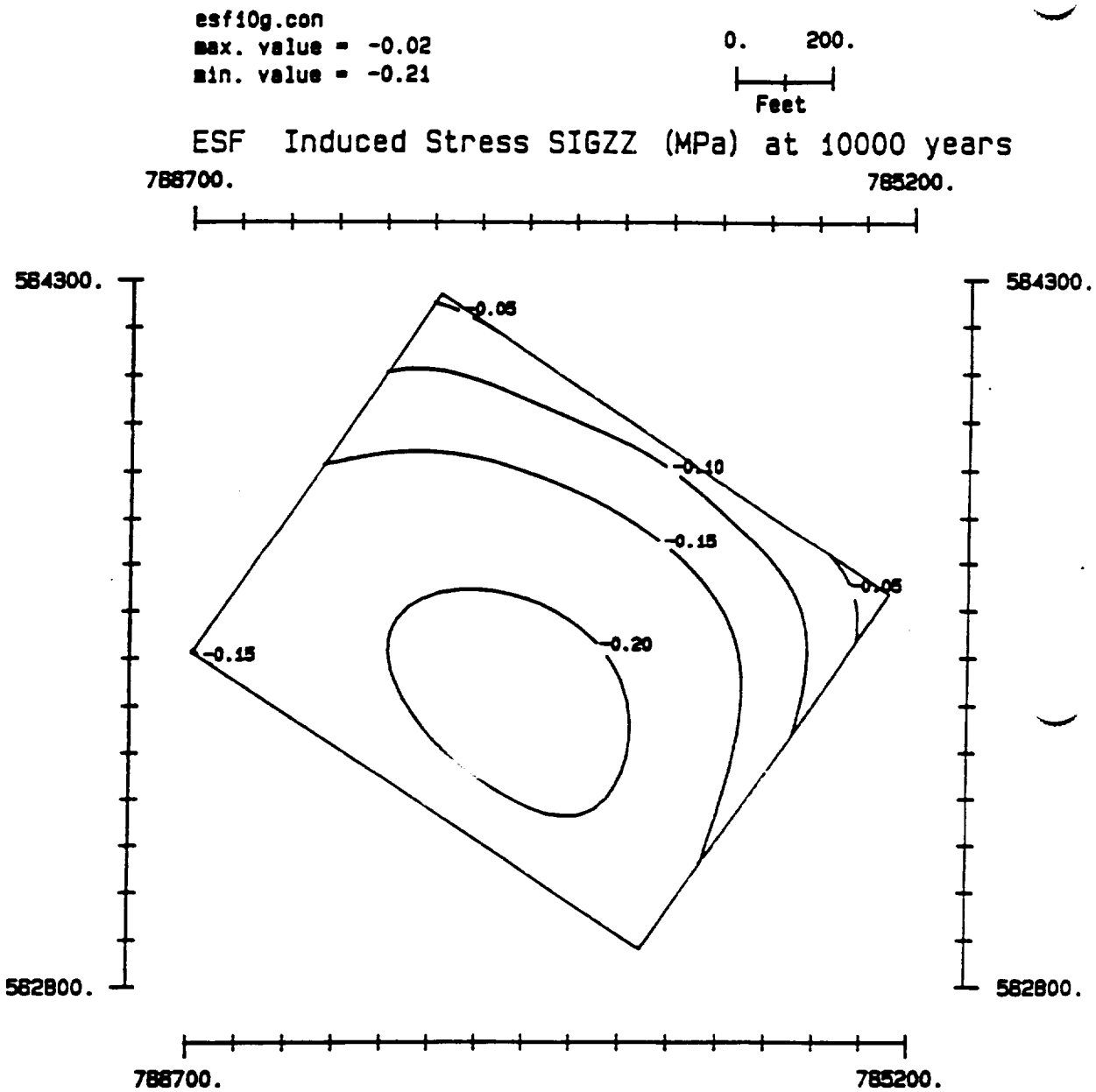

Figure B-40. Exploratory Shaft Facility: Changes in Normal Stress σ_{zz} 10,000 Years After Waste Emplacement Begins

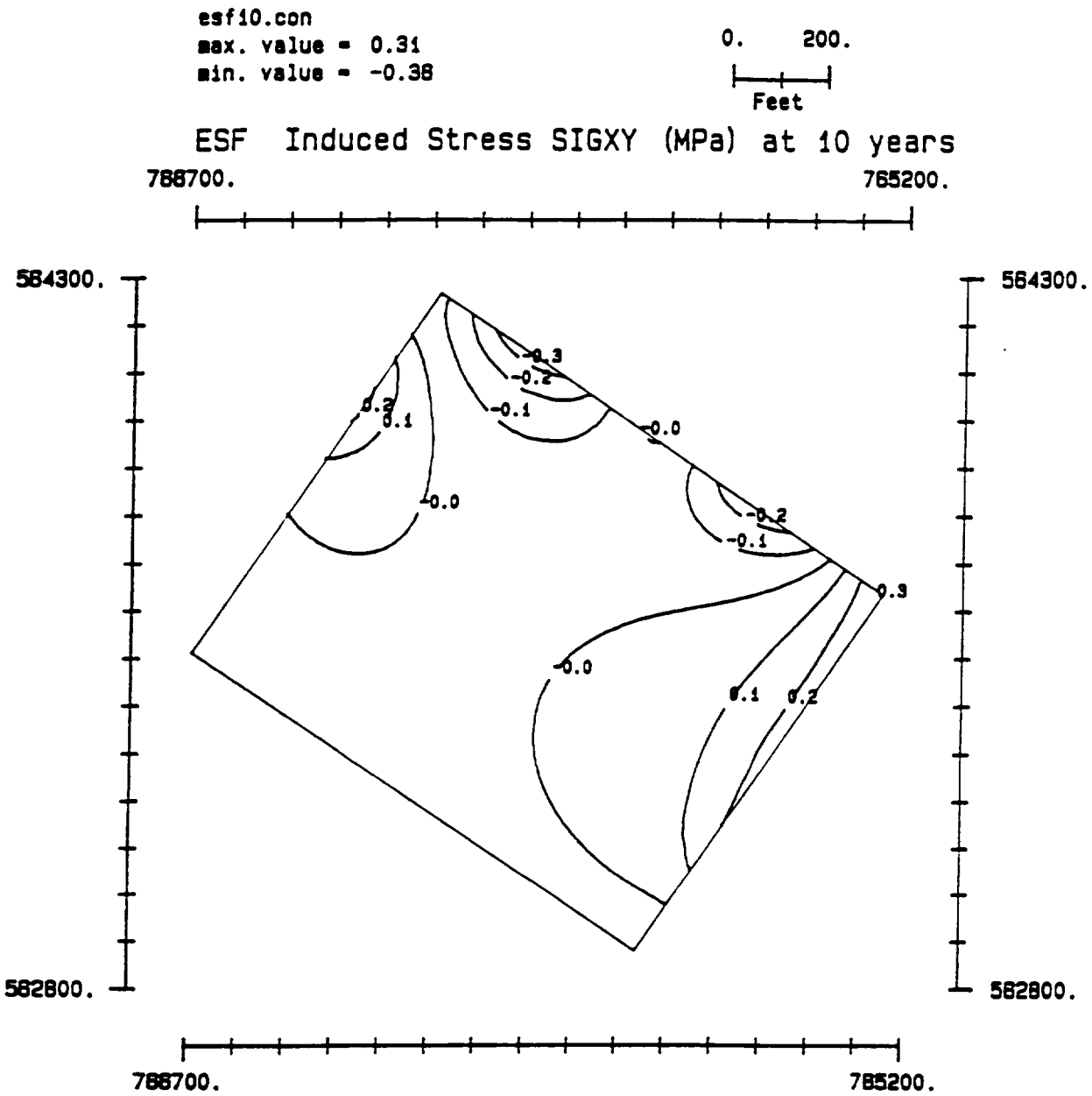

Figure B-41. Exploratory Shaft Facility: Changes in Shear Stress σ_{xy} 10 Years After Waste Emplacement Begins

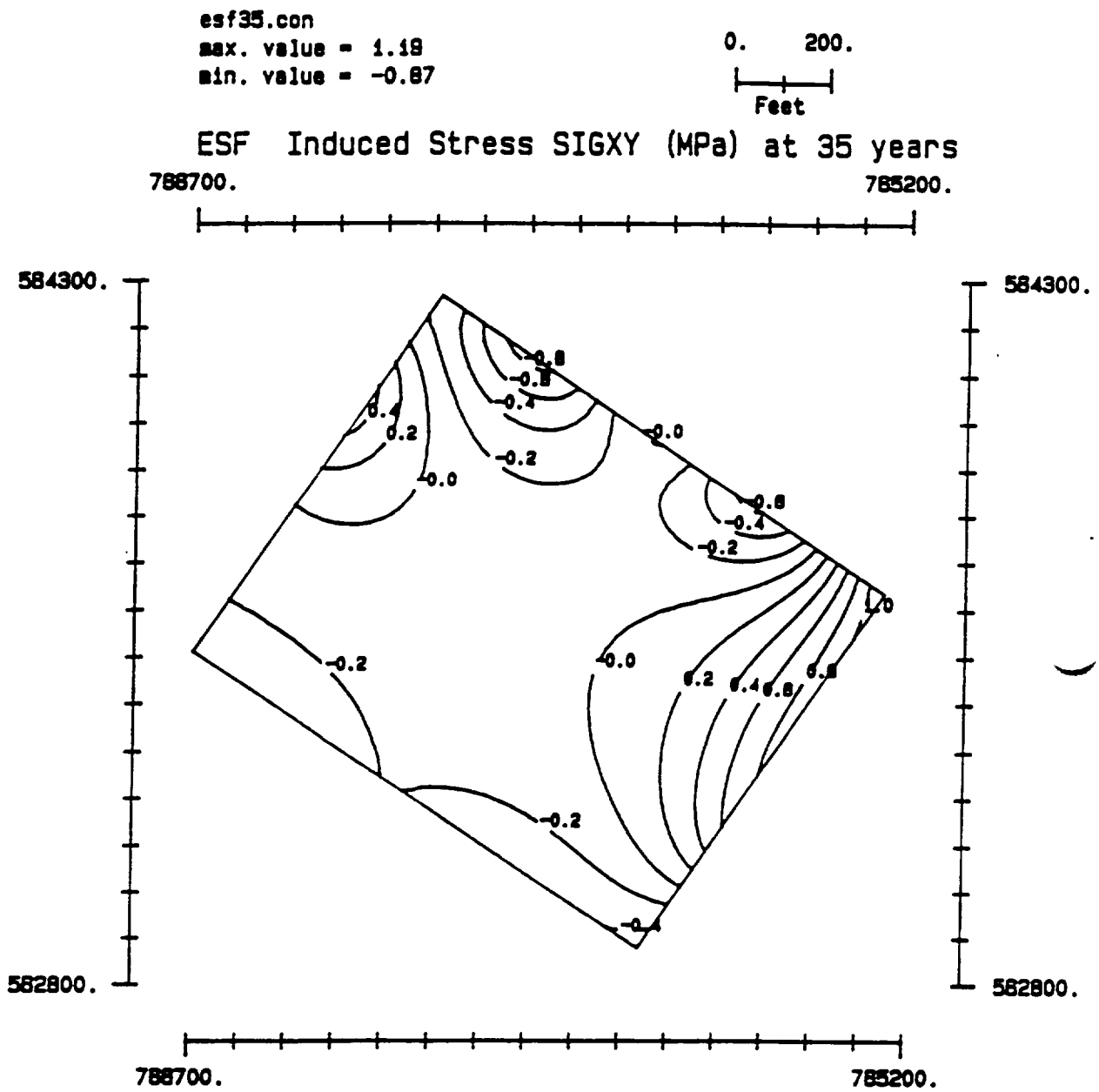

Figure B-42. Exploratory Shaft Facility: Changes in Shear Stress σ_{xy} 35 Years After Waste Emplacement Begins

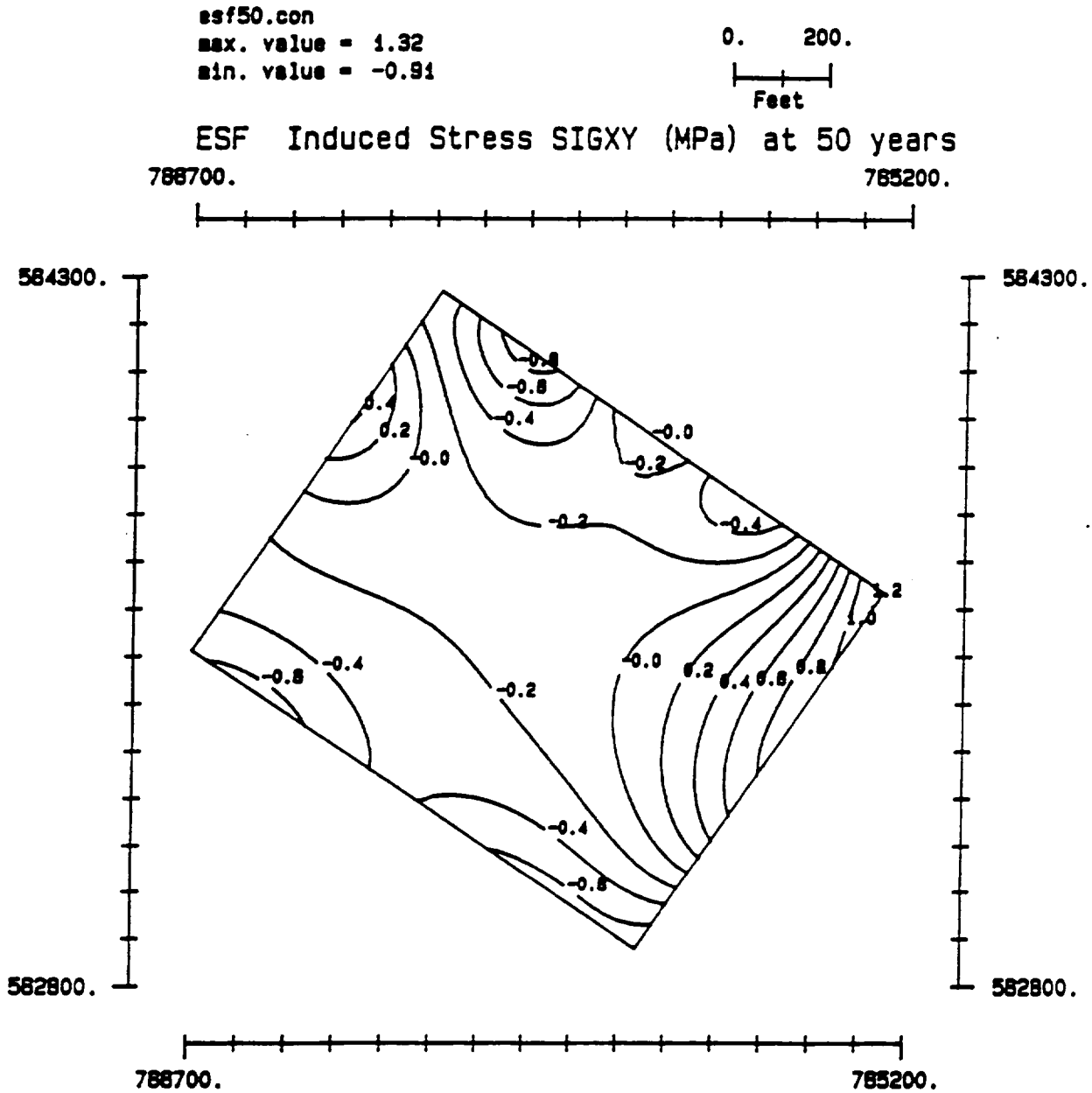

Figure B-43. Exploratory Shaft Facility: Changes in Shear Stress σ_{xy} 50 Years After Waste Emplacement Begins

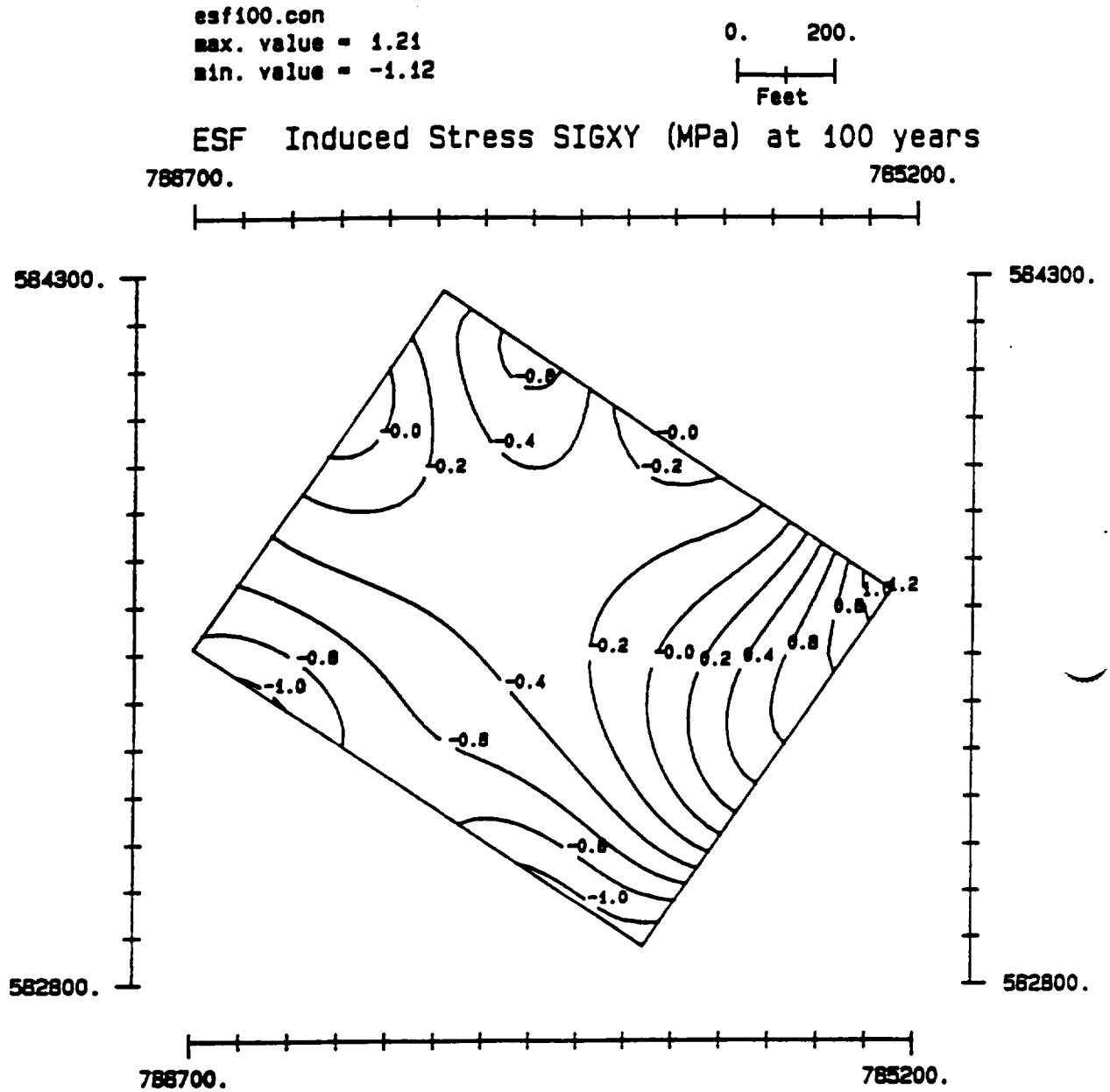

Figure B-44. Exploratory Shaft Facility: Changes in Shear Stress σ_{xy} 100 Years After Waste Emplacement Begins

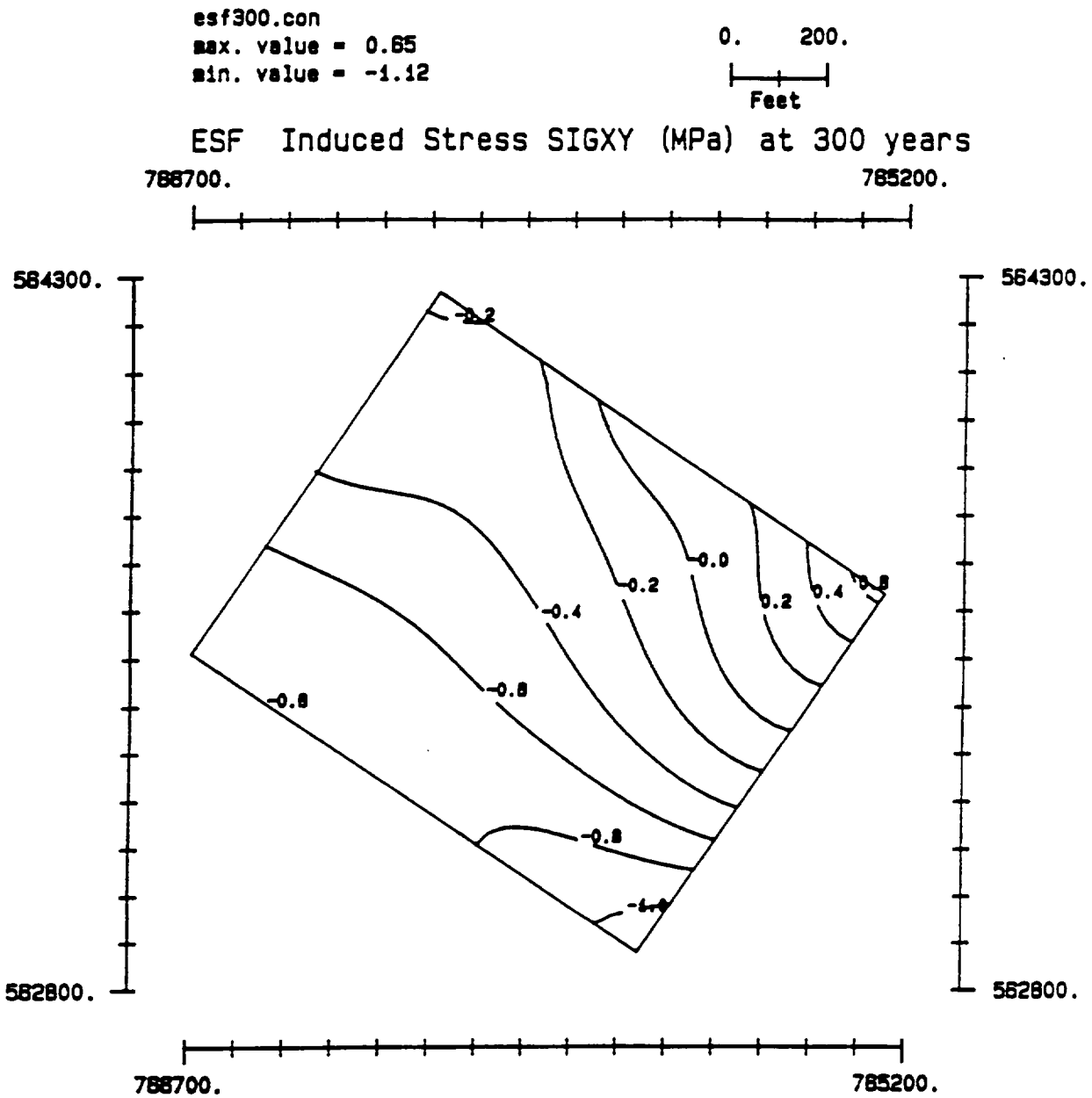

Figure B-45. Exploratory Shaft Facility: Changes in Shear Stress σ_{xy} 300 Years After Waste Emplacement Begins

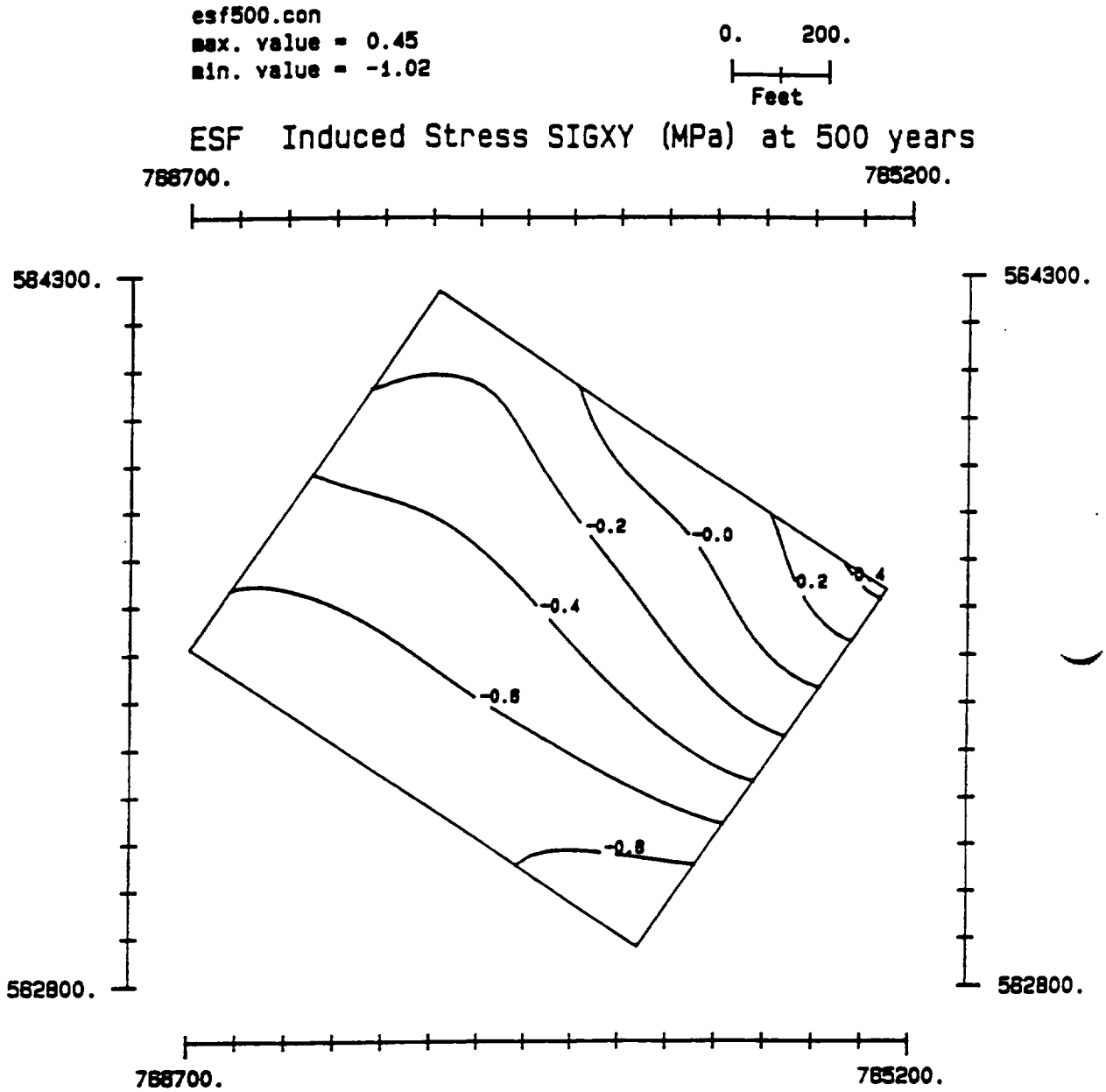

Figure B-46. Exploratory Shaft Facility: Changes in Shear Stress σ_{xy} 500 Years After Waste Emplacement Begins

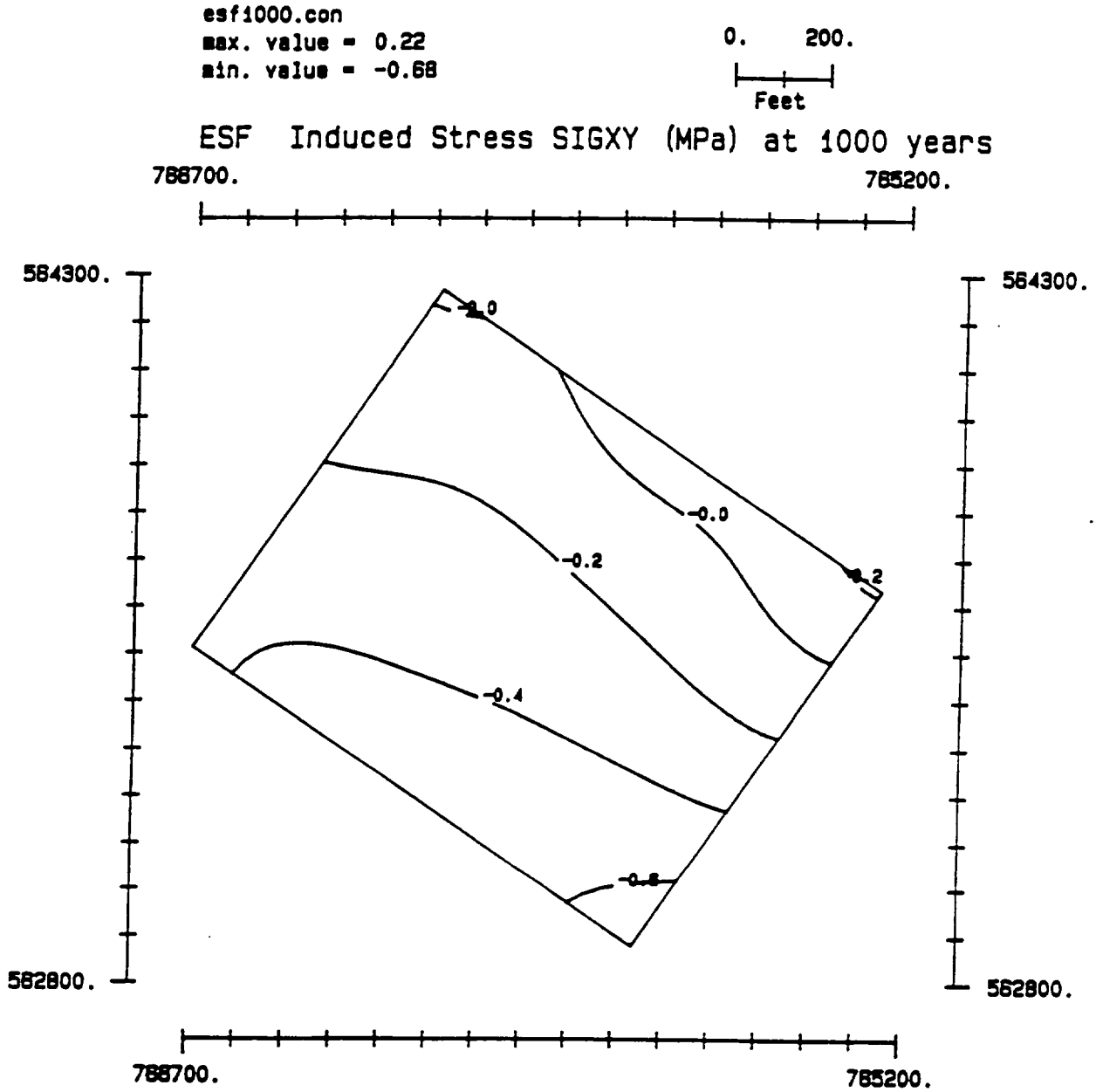

Figure B-47. Exploratory Shaft Facility: Changes in Shear Stress σ_{xy} 1,000 Years After Waste Emplacement Begins

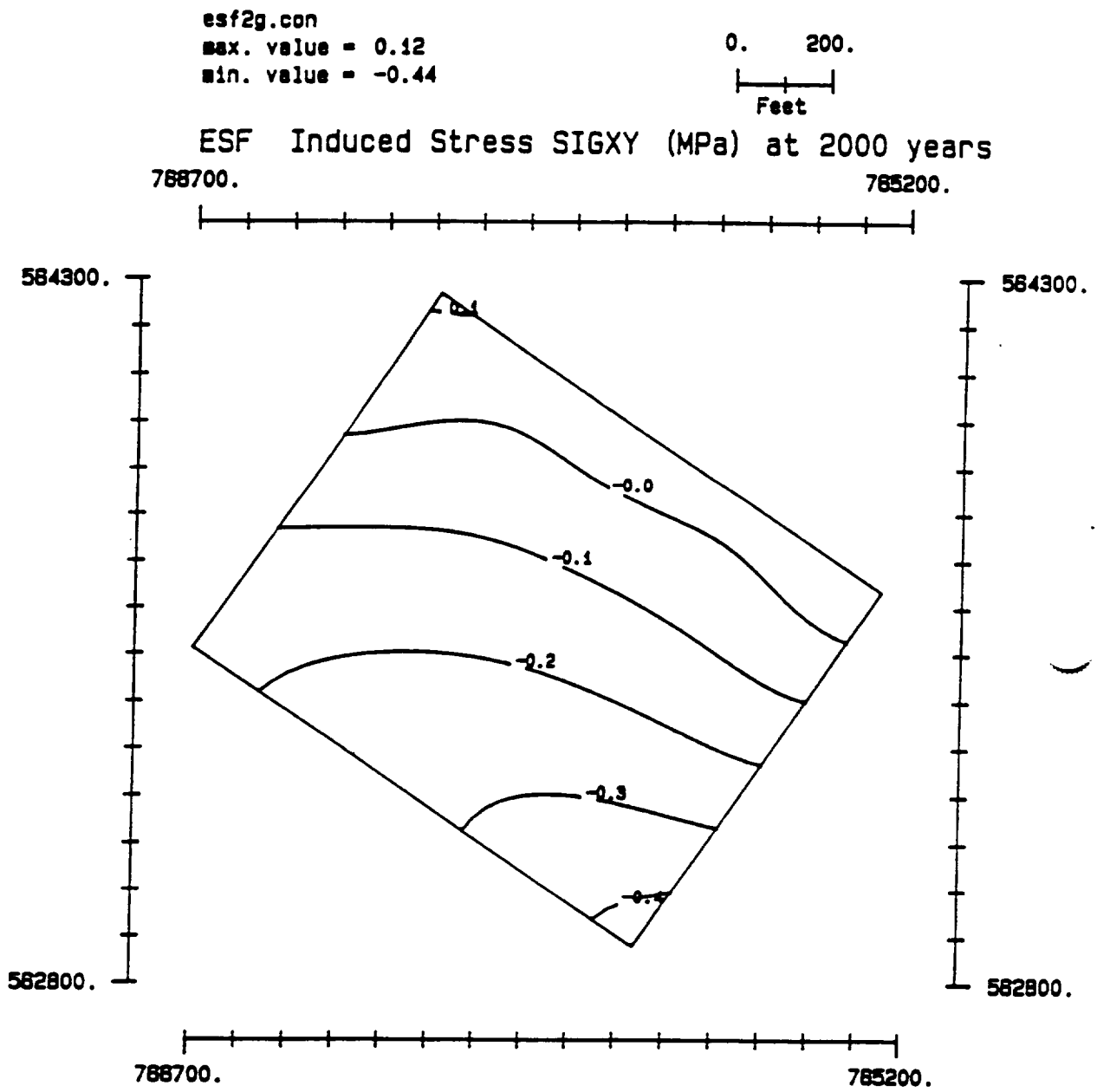

Figure B-48. Exploratory Shaft Facility: Changes in Shear Stress σ_{xy} 2,000 Years After Waste Emplacement Begins

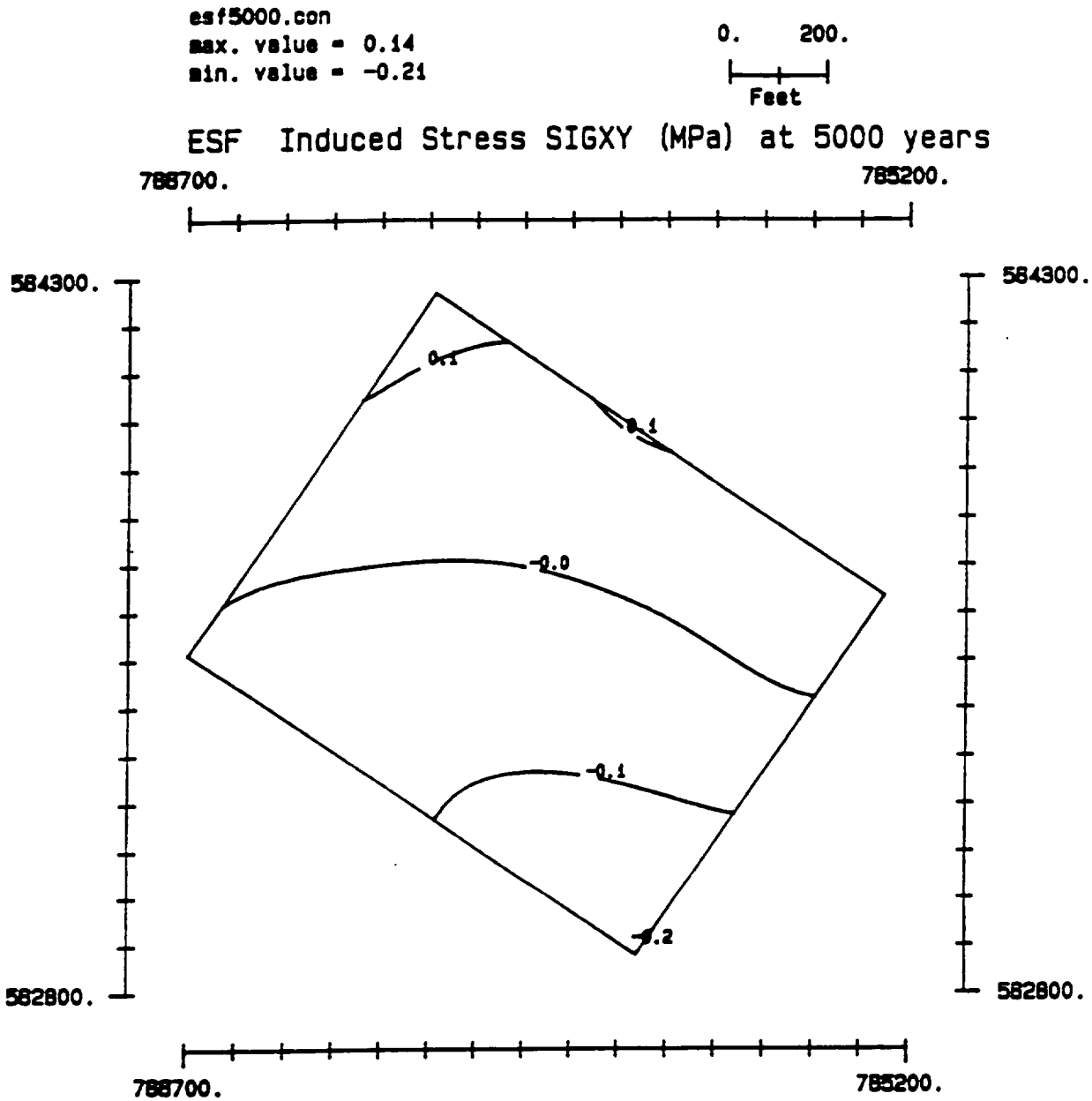

Figure B-49. Exploratory Shaft Facility: Changes in Shear Stress σ_{xy} 5,000 Years After Waste Emplacement Begins

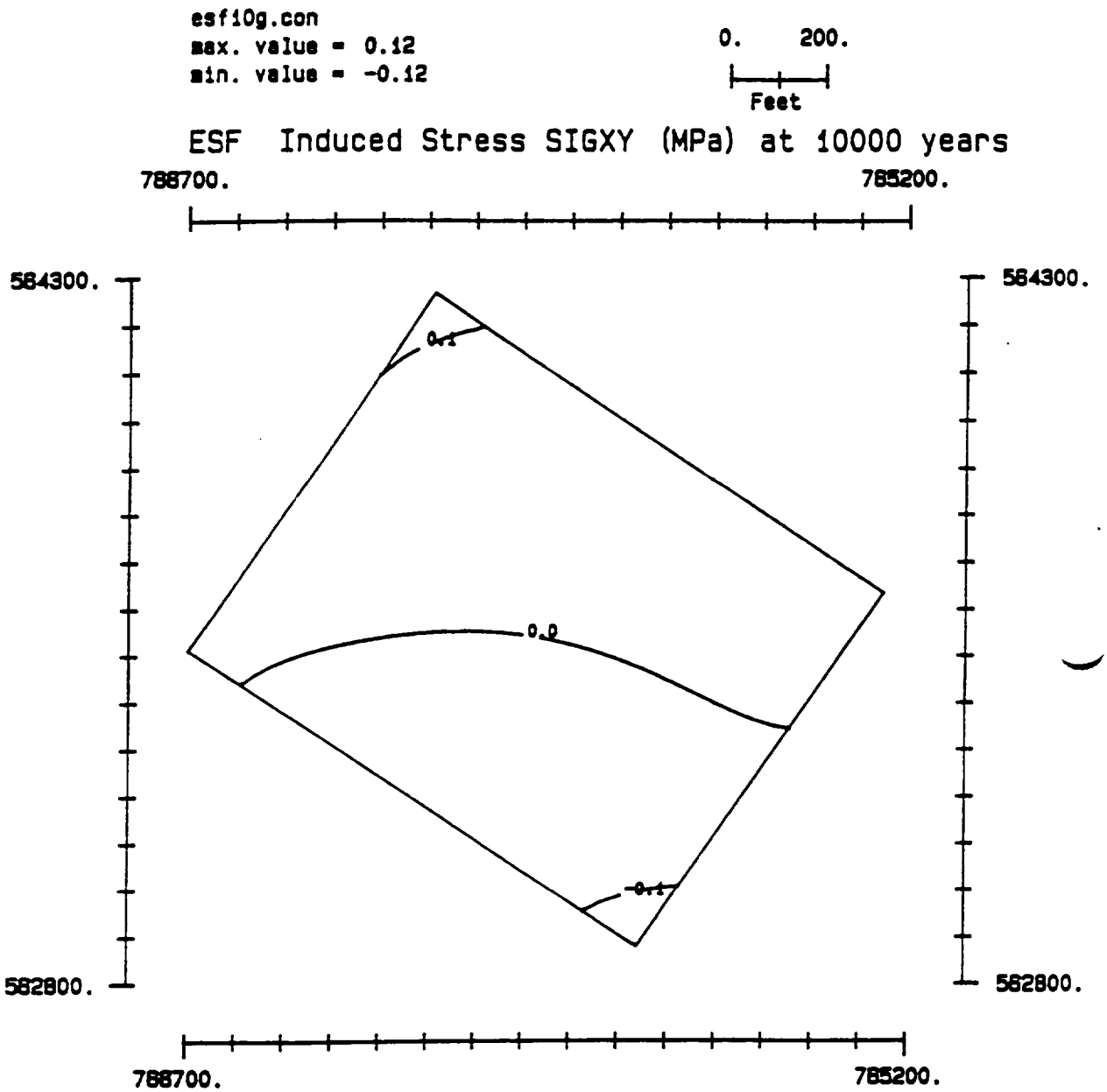

Figure B-50. Exploratory Shaft Facility: Changes in Shear Stress σ_{xy} 10,000 Years After Waste Emplacement Begins

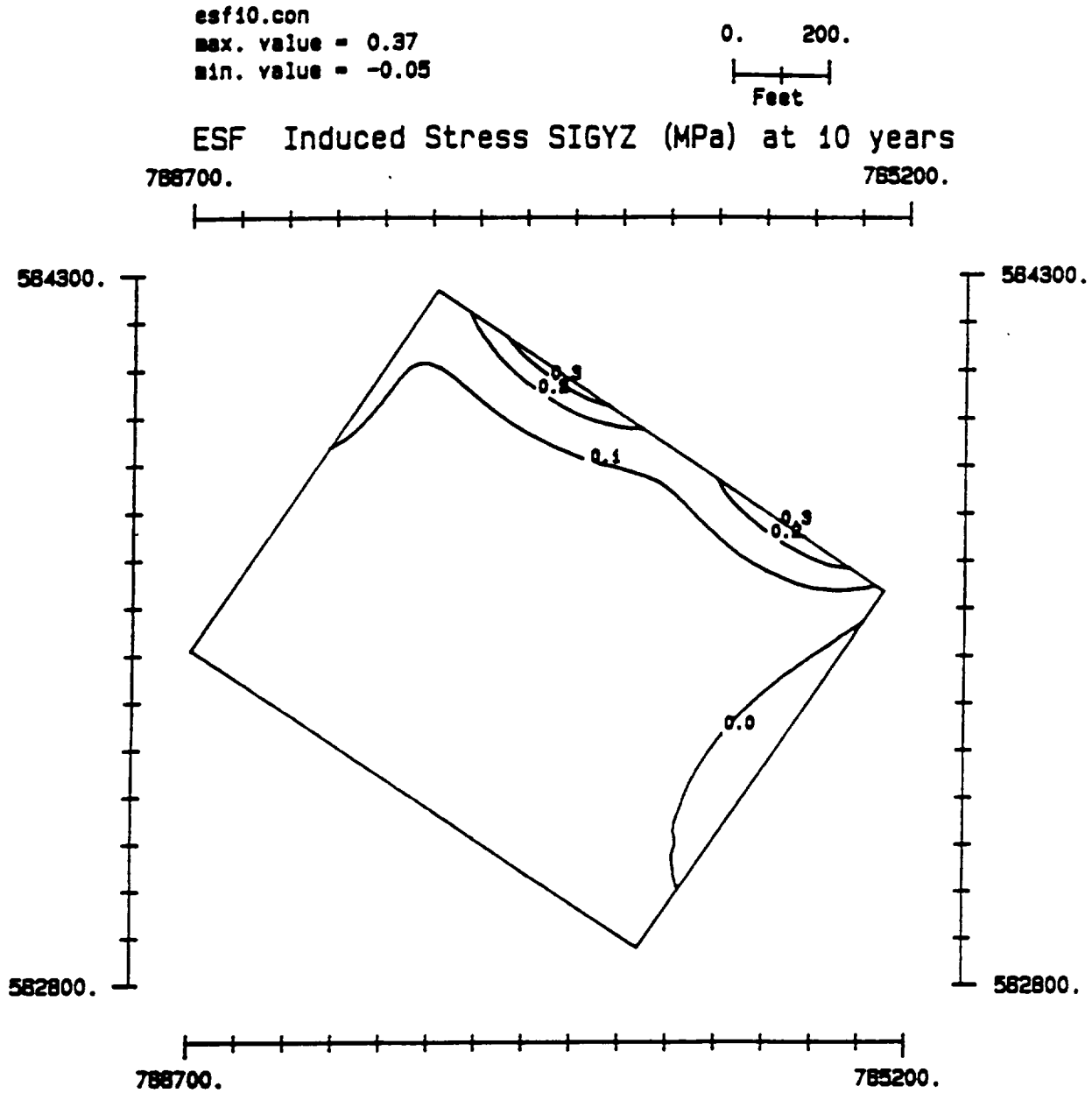

Figure B-51. Exploratory Shaft Facility: Changes in Shear Stress σ_{yz} 10 Years After Waste Emplacement Begins

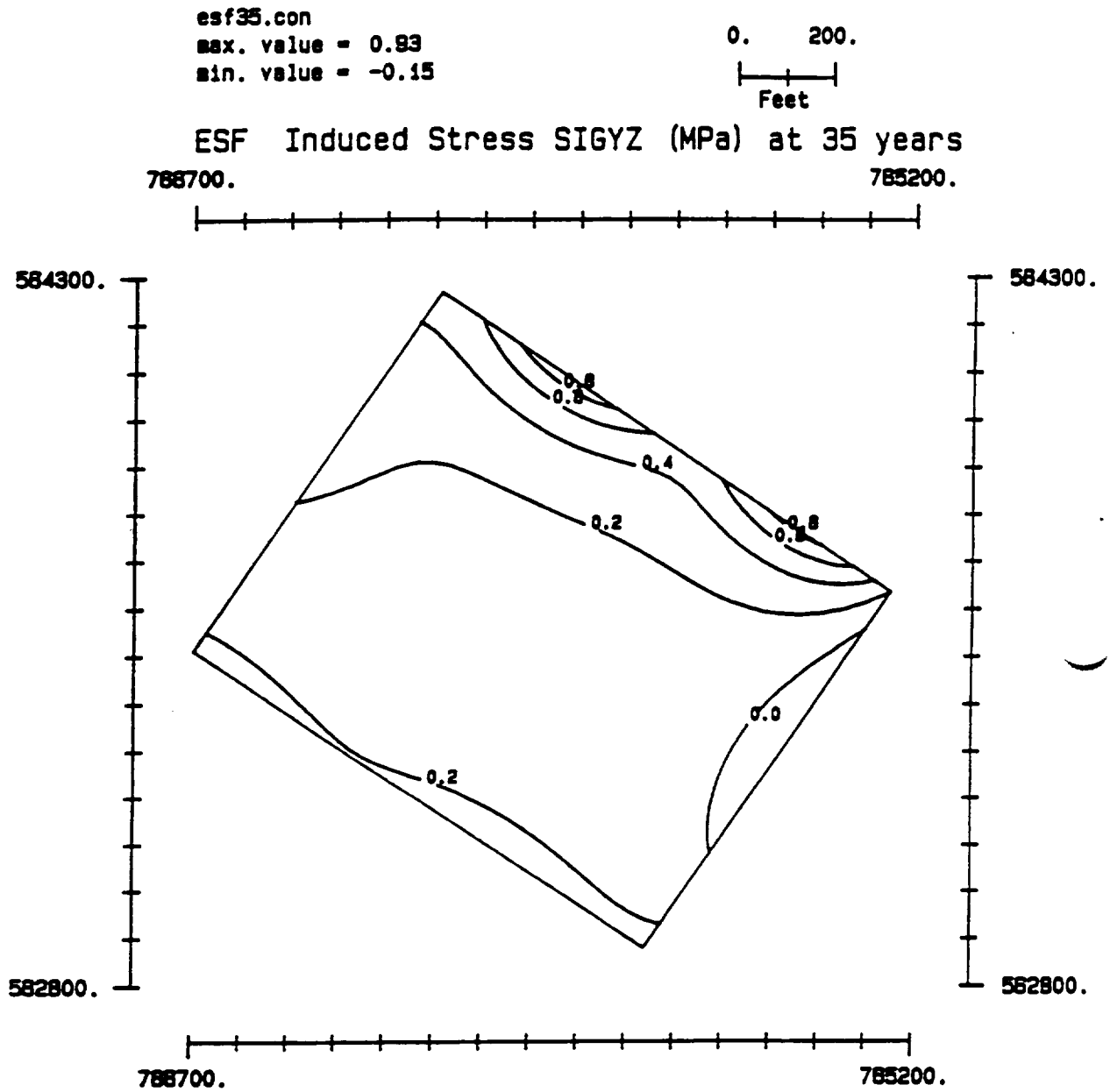

Figure B-52. Exploratory Shaft Facility: Changes in Shear Stress σ_{yz} 35 Years After Waste Emplacement Begins

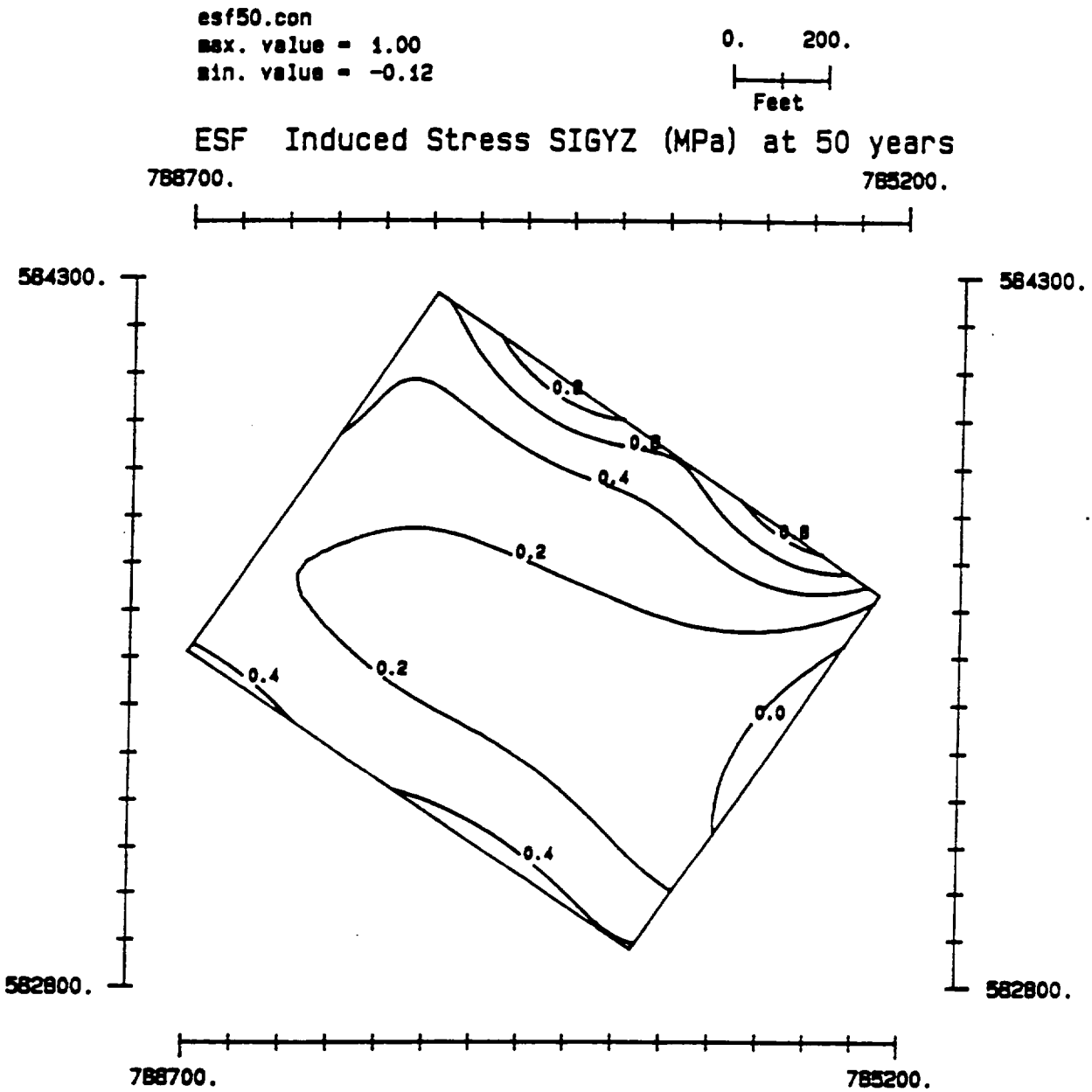

Figure B-53. Exploratory Shaft Facility: Changes in Shear Stress σ_{yz} 50 Years After Waste Emplacement Begins

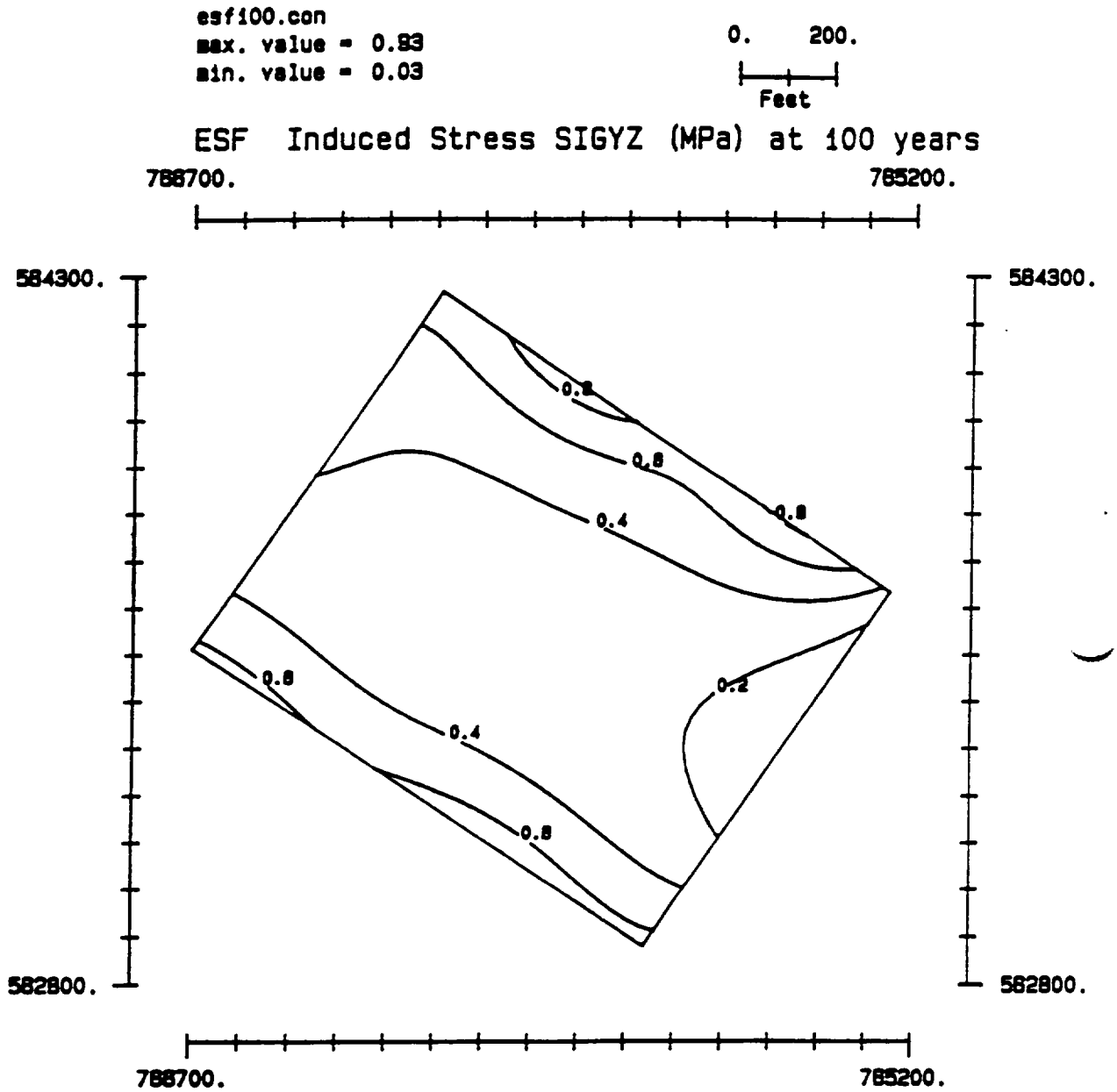

Figure B-54. Exploratory Shaft Facility: Changes in Shear Stress σ_{yz} 100 Years After Waste Emplacement Begins

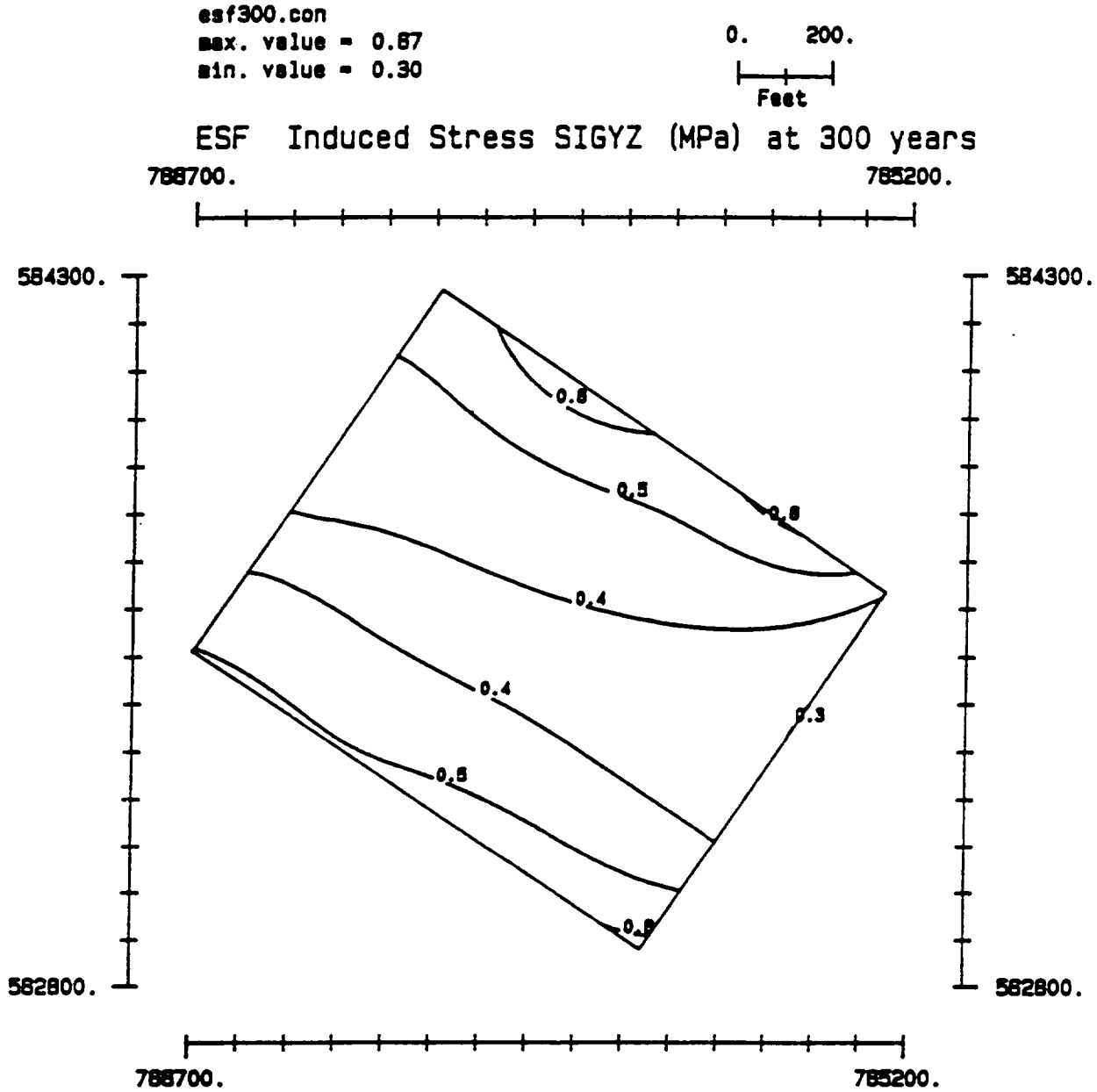

Figure B-55. Exploratory Shaft Facility: Changes in Shear Stress σ_{yz} 300 Years After Waste Emplacement Begins

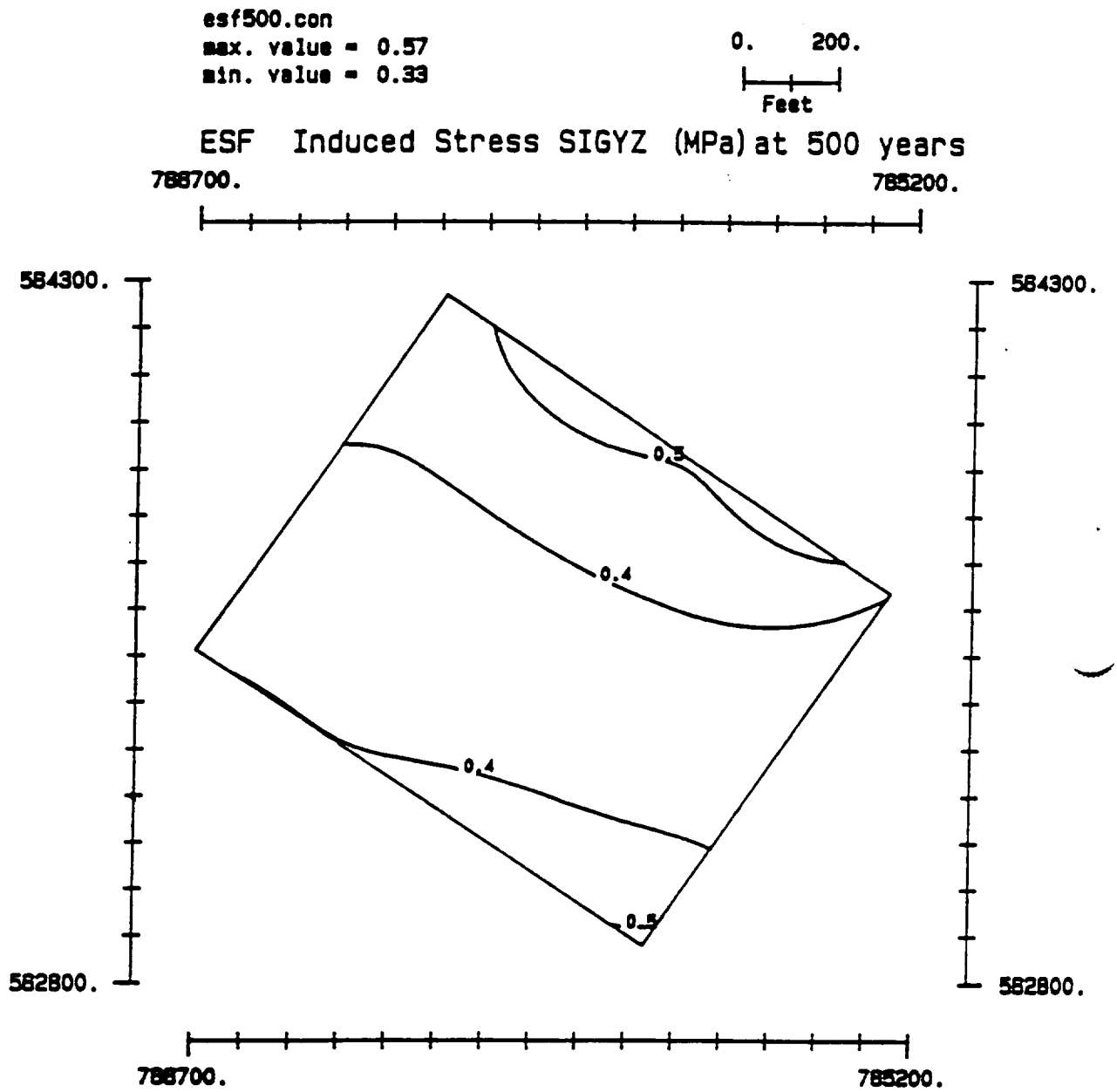

Figure B-56. Exploratory Shaft Facility: Changes in Shear Stress σ_{yz} 500 Years After Waste Emplacement Begins

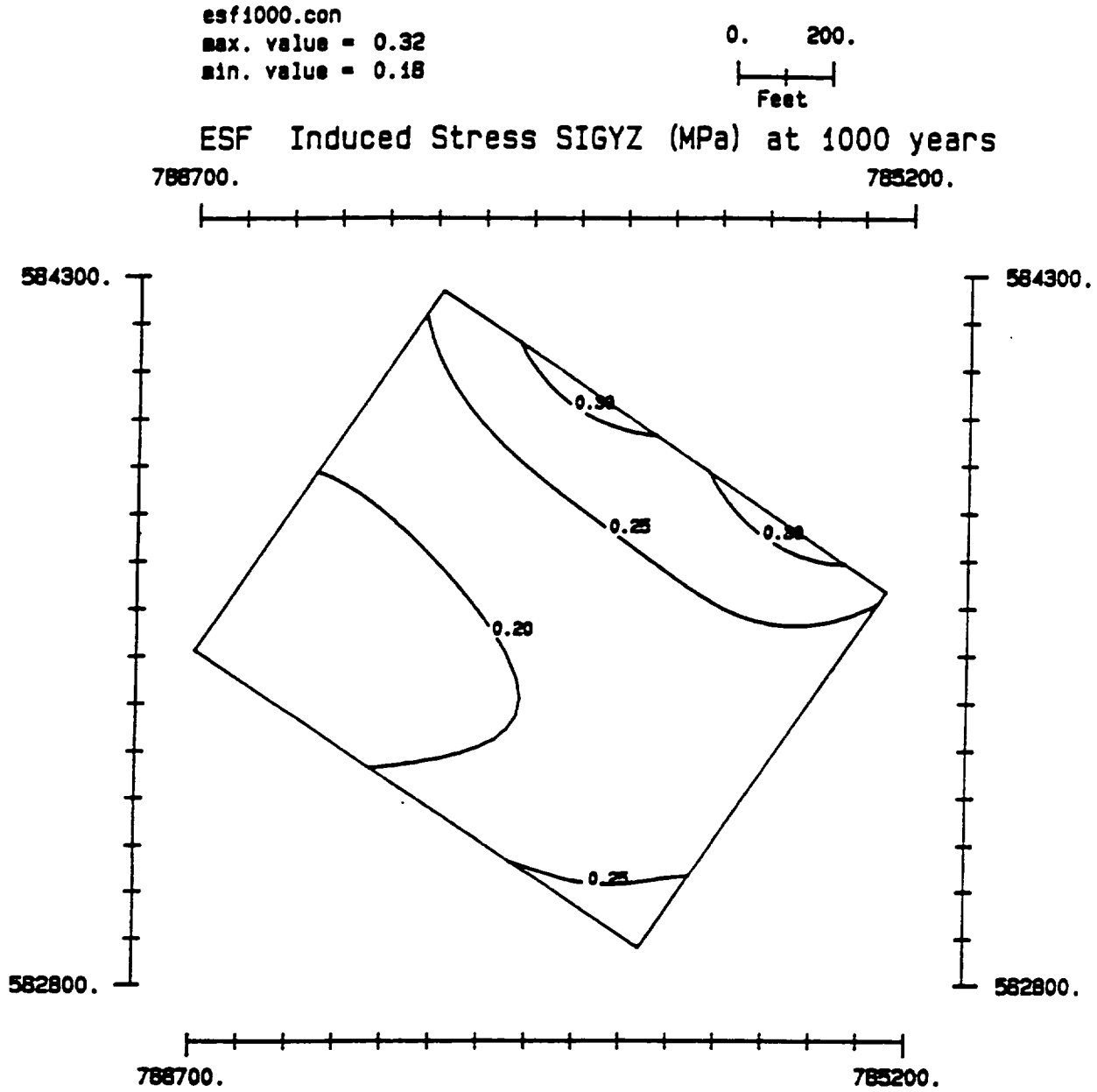

Figure B-57. Exploratory Shaft Facility: Changes in Shear Stress σ_{yz} 1,000 Years After Waste Emplacement Begins

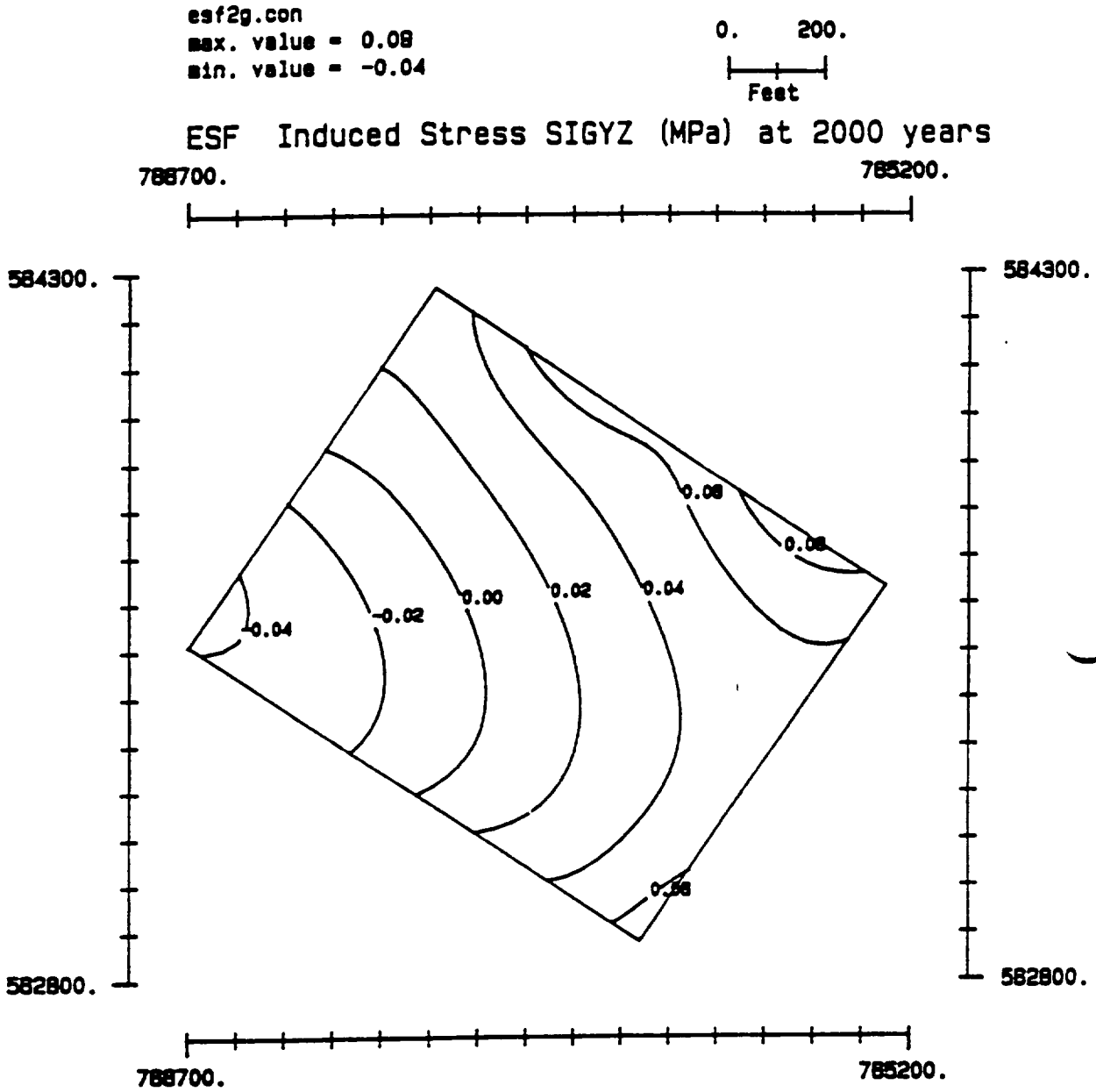

Figure B-58. Exploratory Shaft Facility: Changes in Shear Stress σ_{yz} 2,000 Years After Waste Emplacement Begins

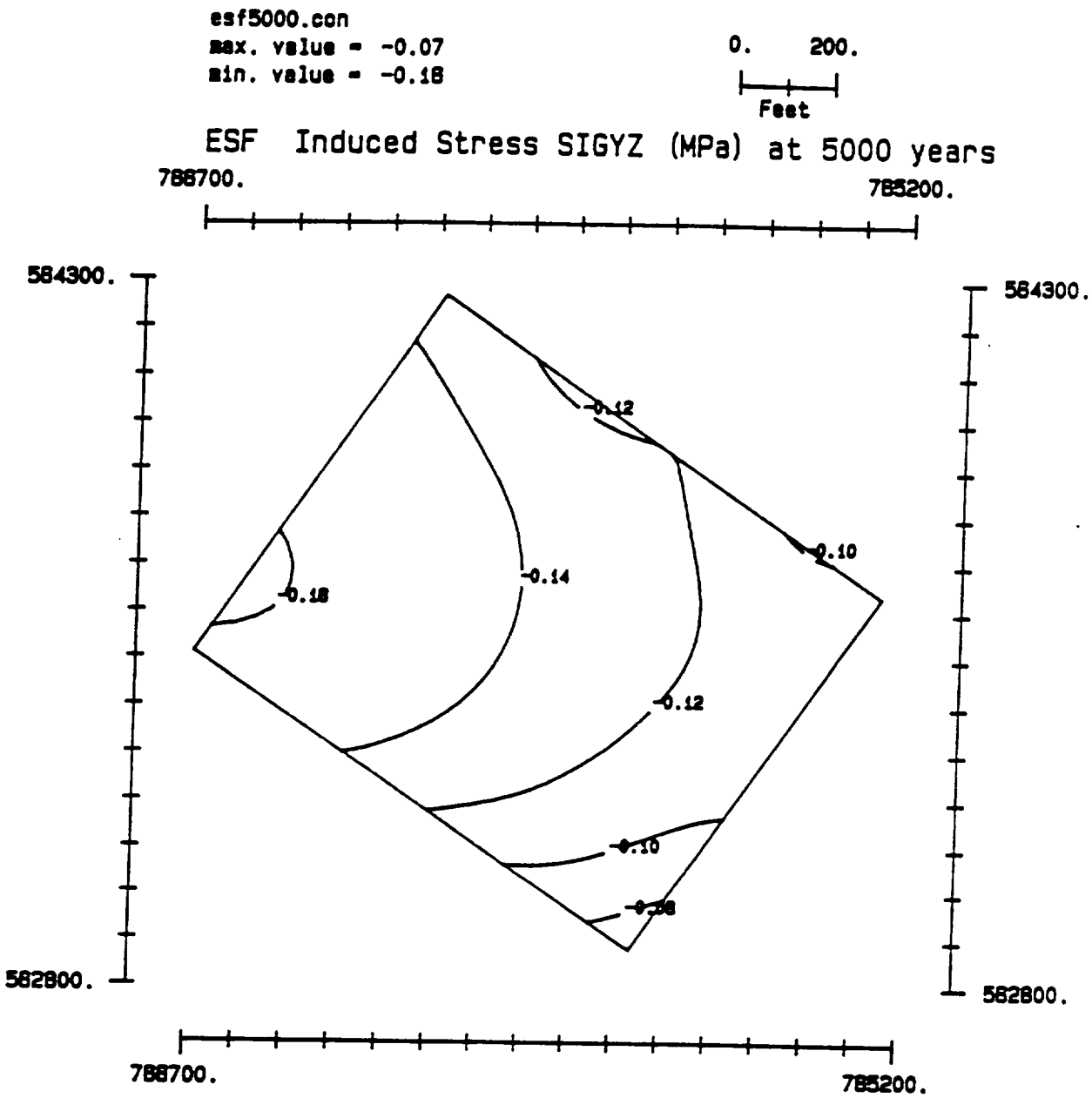

Figure B-59. Exploratory Shaft Facility: Changes in Shear Stress σ_{yz} 5,000 Years After Waste Emplacement Begins

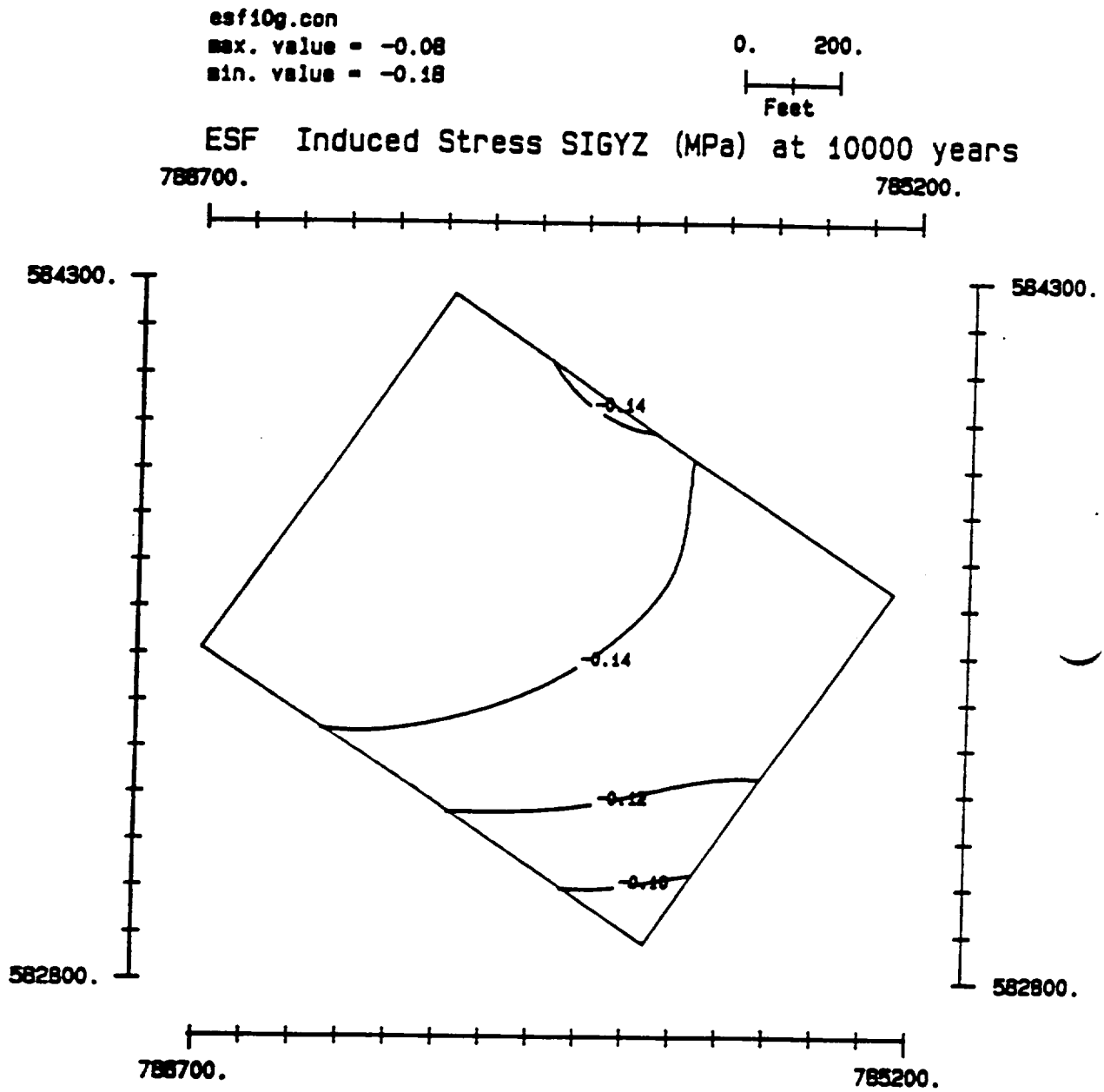

Figure B-60. Exploratory Shaft Facility: Changes in Shear Stress σ_{yz} 10,000 Years After Waste Emplacement Begins

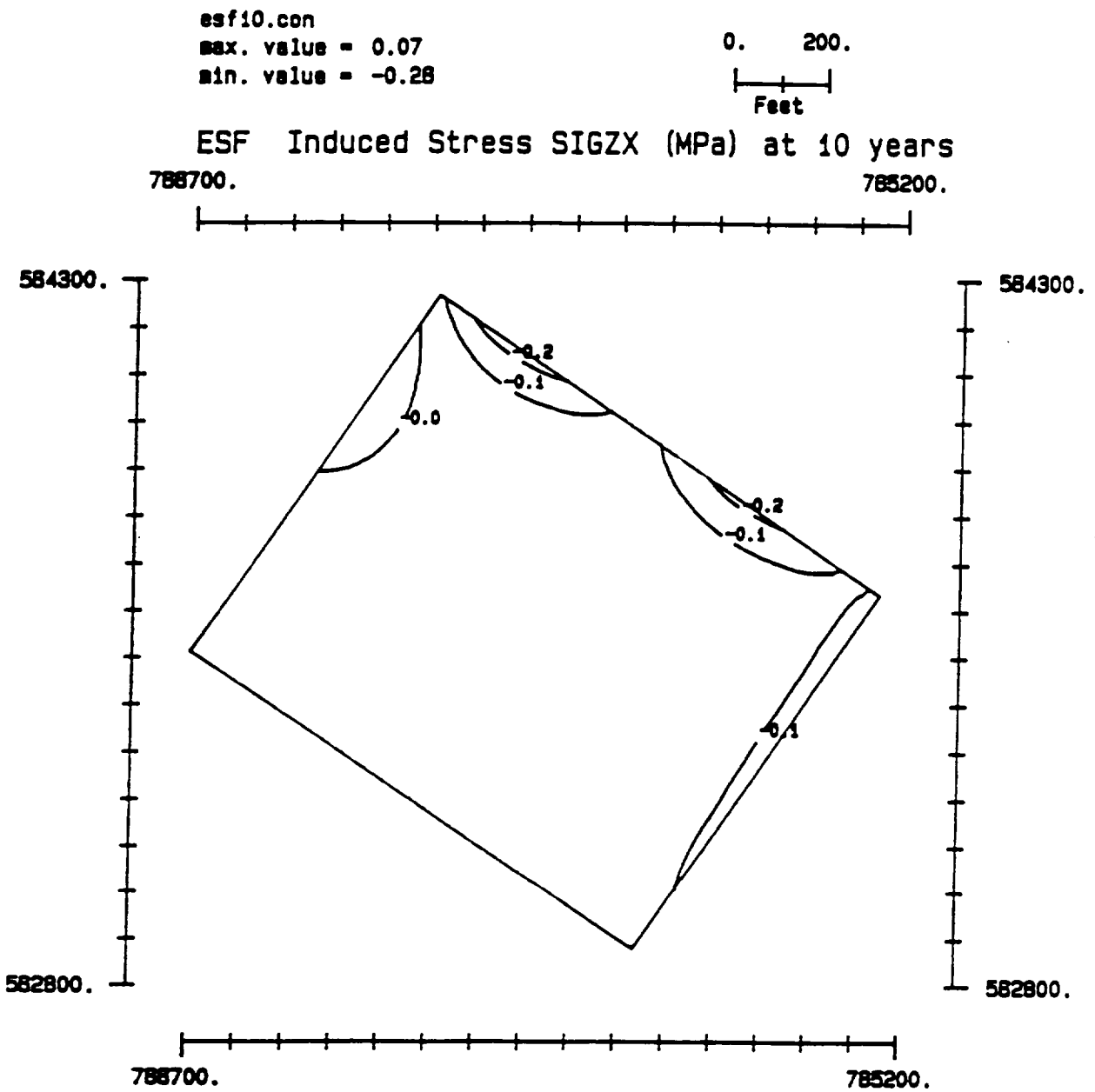

Figure B-61. Exploratory Shaft Facility: Changes in Shear Stress σ_{zx} 10 Years After Waste Emplacement Begins

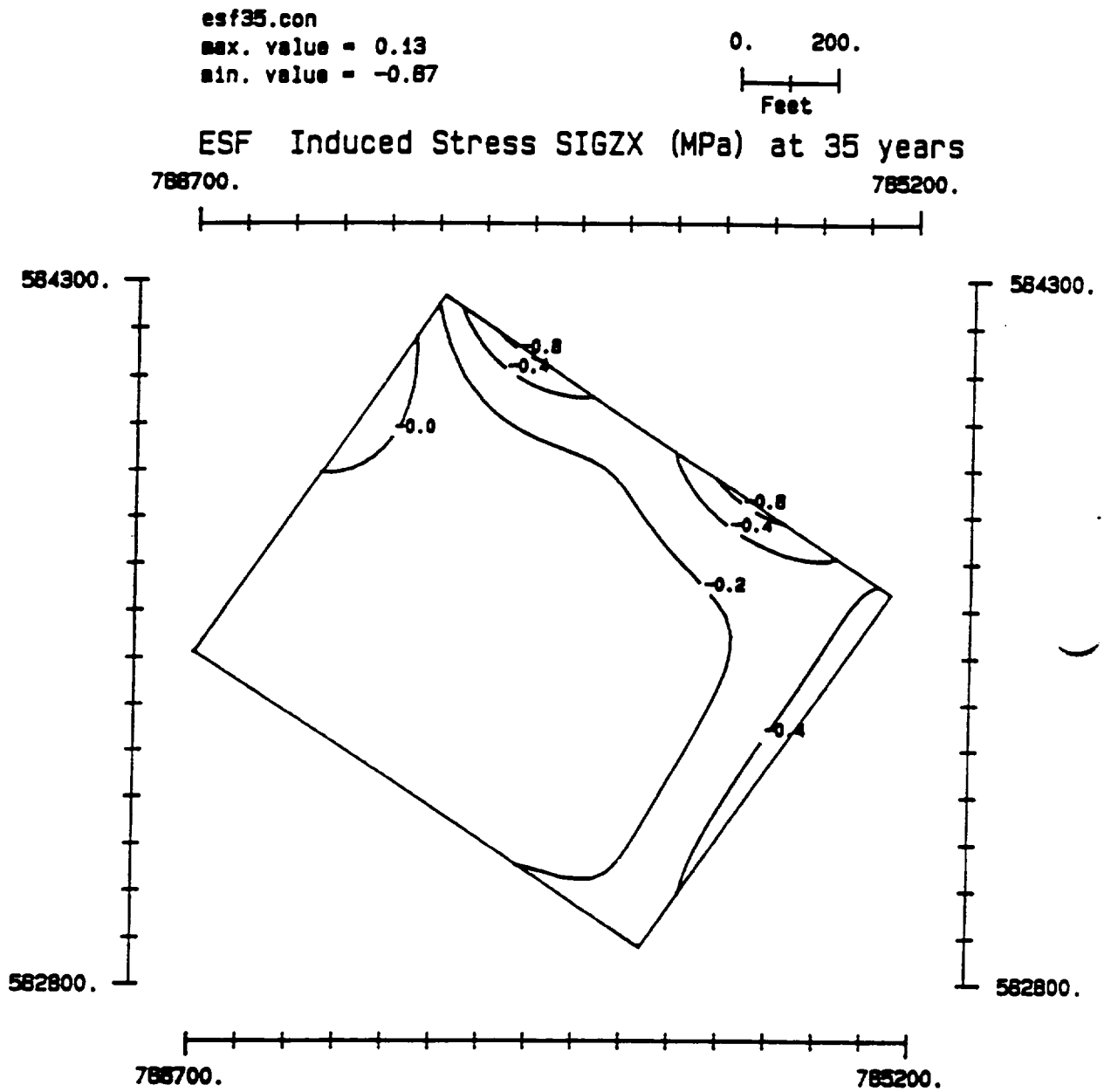

Figure B-62. Exploratory Shaft Facility: Changes in Shear Stress σ_{zx} 35 Years After Waste Emplacement Begins

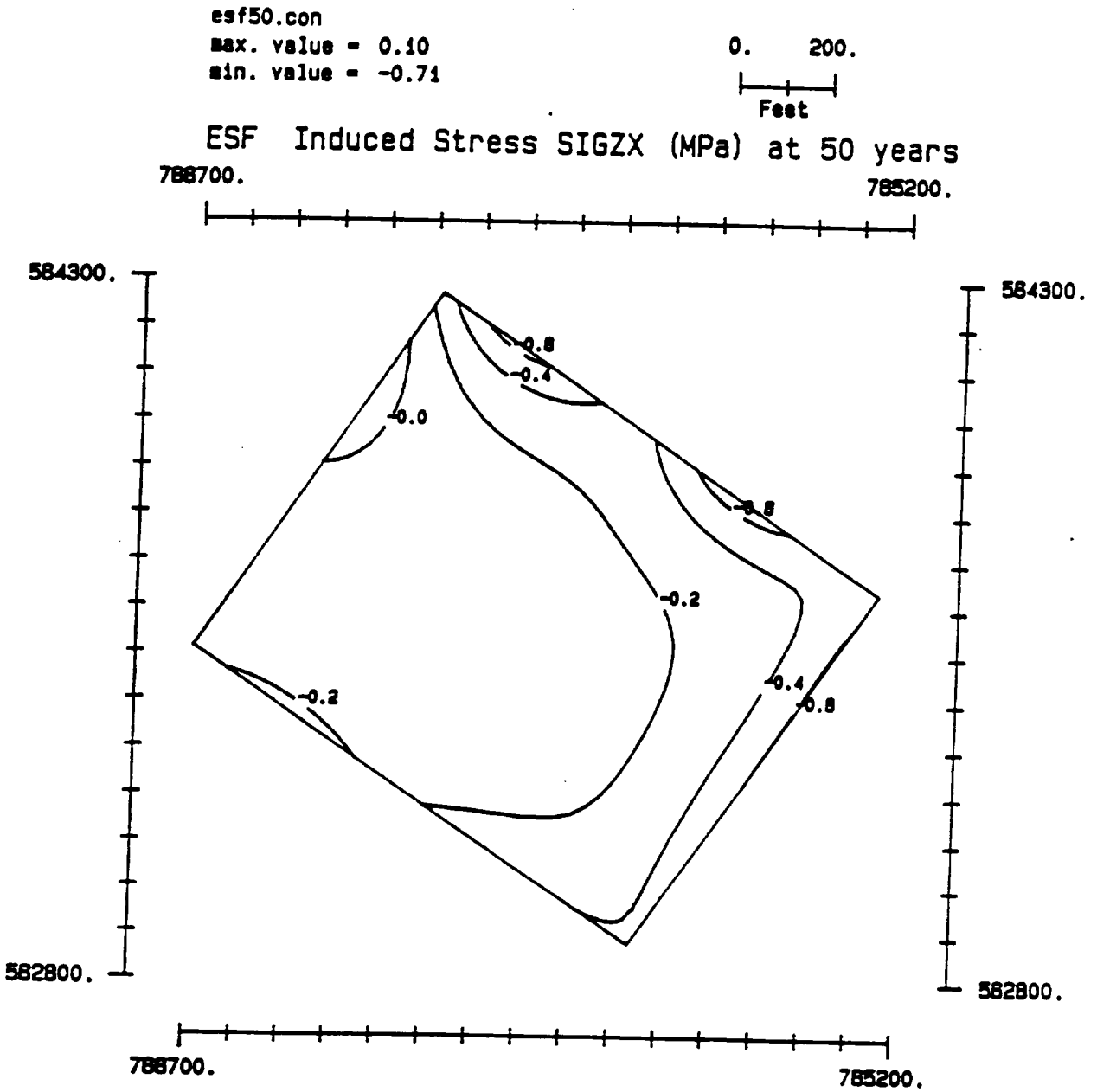

Figure B-63. Exploratory Shaft Facility: Changes in Shear Stress σ_{xz} 50 Years After Waste Emplacement Begins

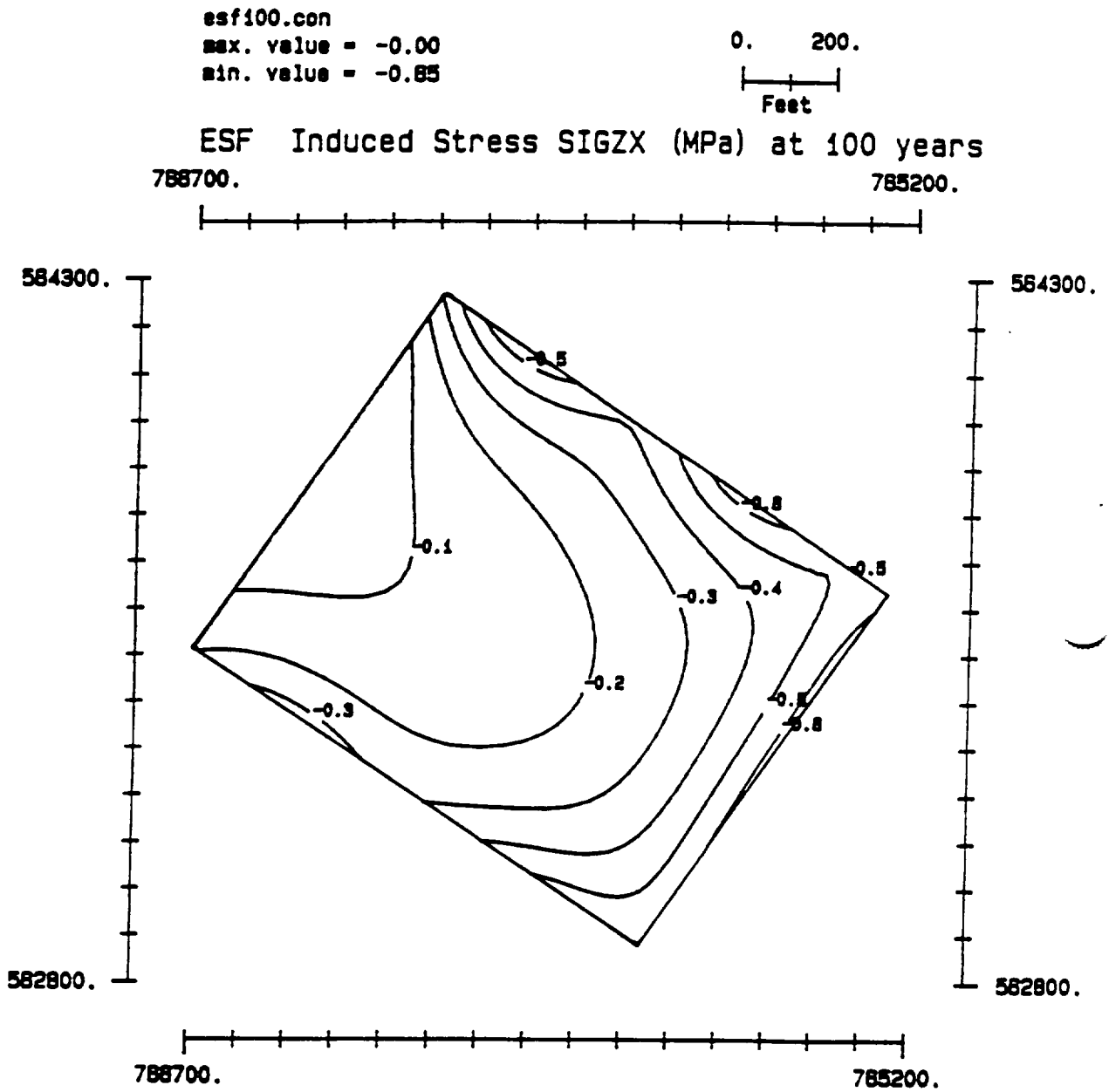

Figure B-64. Exploratory Shaft Facility: Changes in Shear Stress σ_{zx} 100 Years After Was' Emplacement Begins

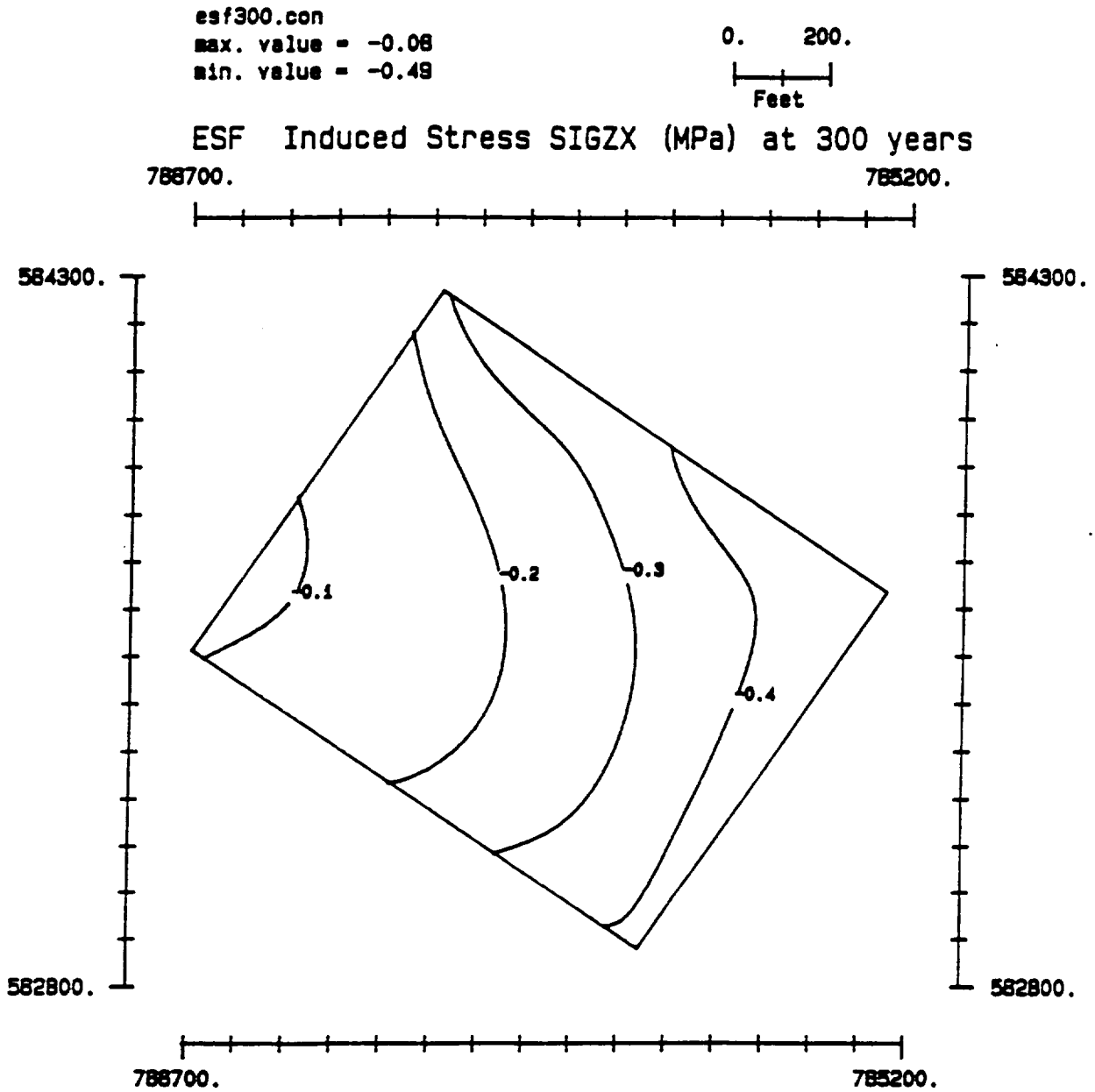

Figure B-65. Exploratory Shaft Facility: Changes in Shear Stress σ_{zx} 300 Years After Waste Emplacement Begins

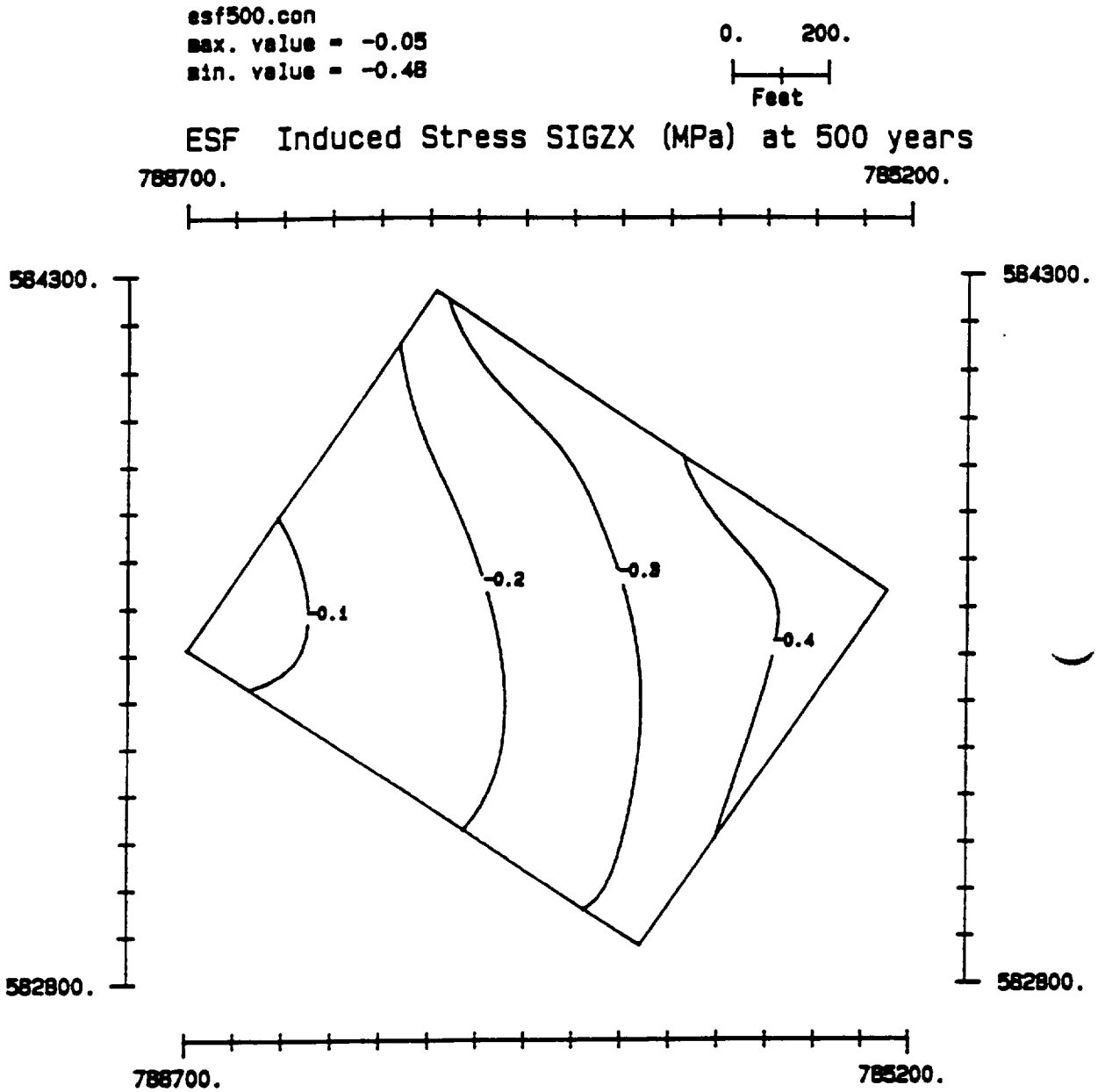

Figure B-66. Exploratory Shaft Facility: Changes in Shear Stress σ_{zx} 500 Years After Waste Emplacement Begins

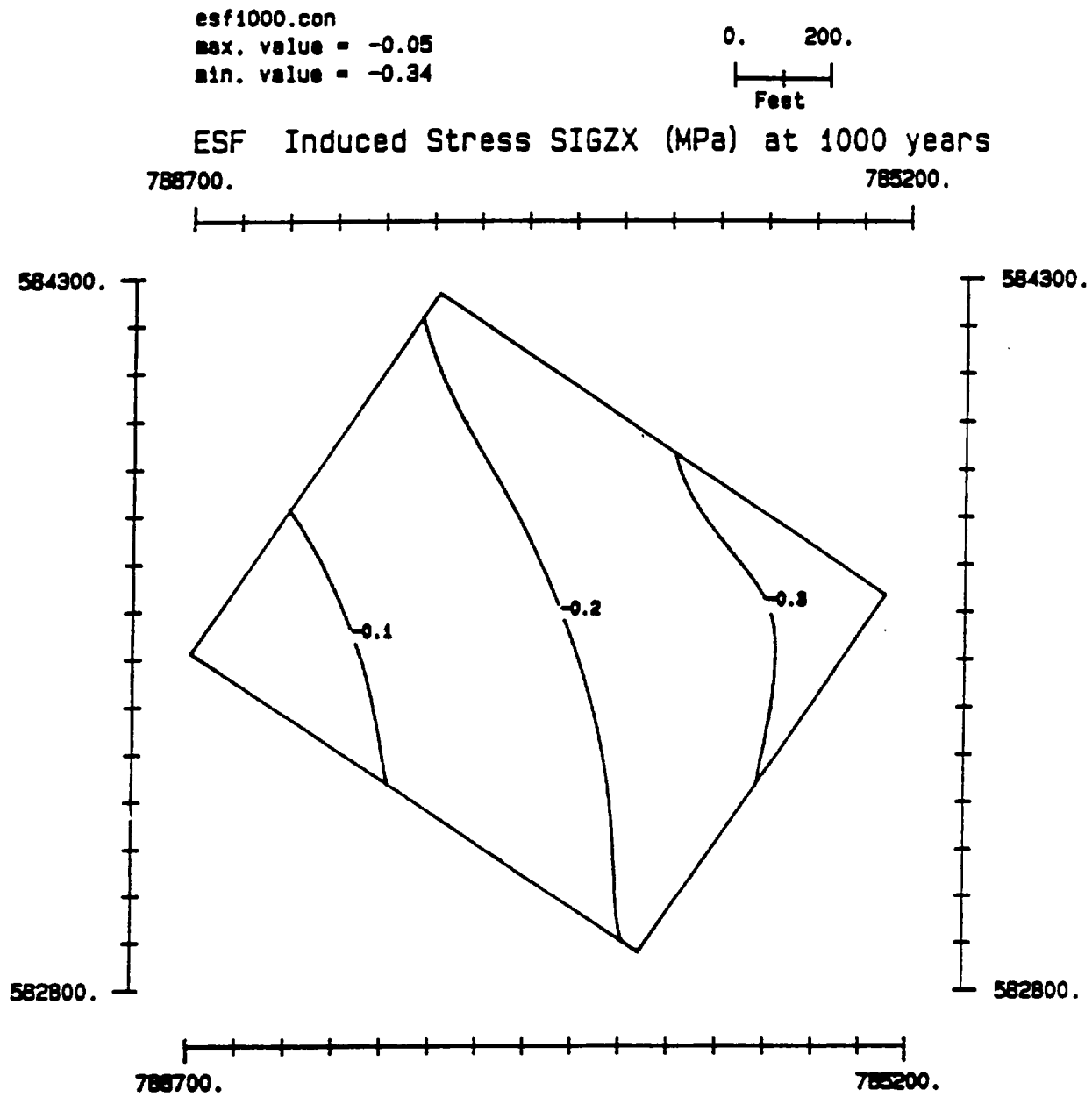

Figure B-67. Exploratory Shaft Facility: Changes in Shear Stress σ_{zx} 1,000 Years After Waste Emplacement Begins

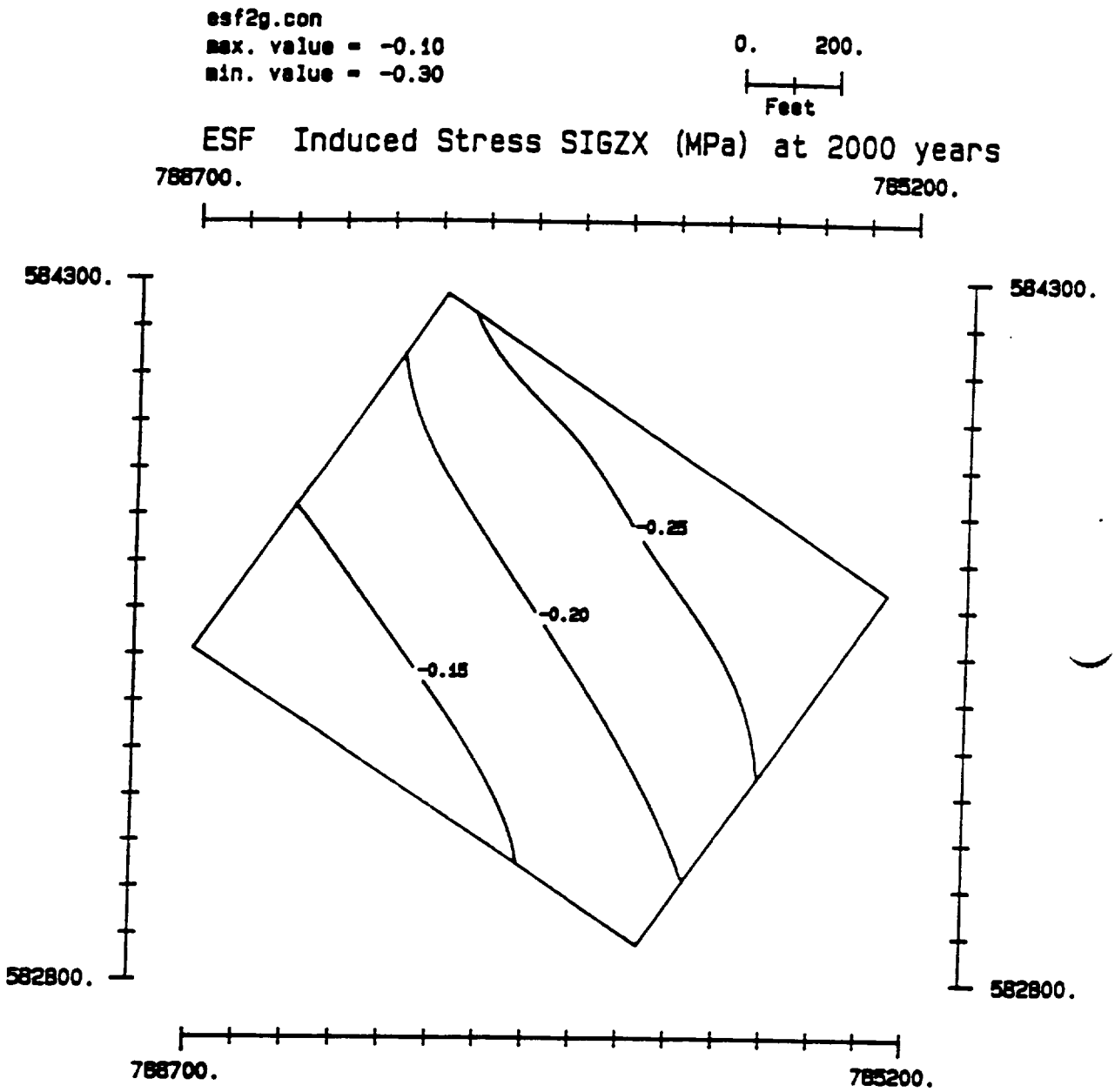

Figure B-68. Exploratory Shaft Facility: Changes in Shear Stress σ_{zx} 2,000 Years After Waste Emplacement Begins

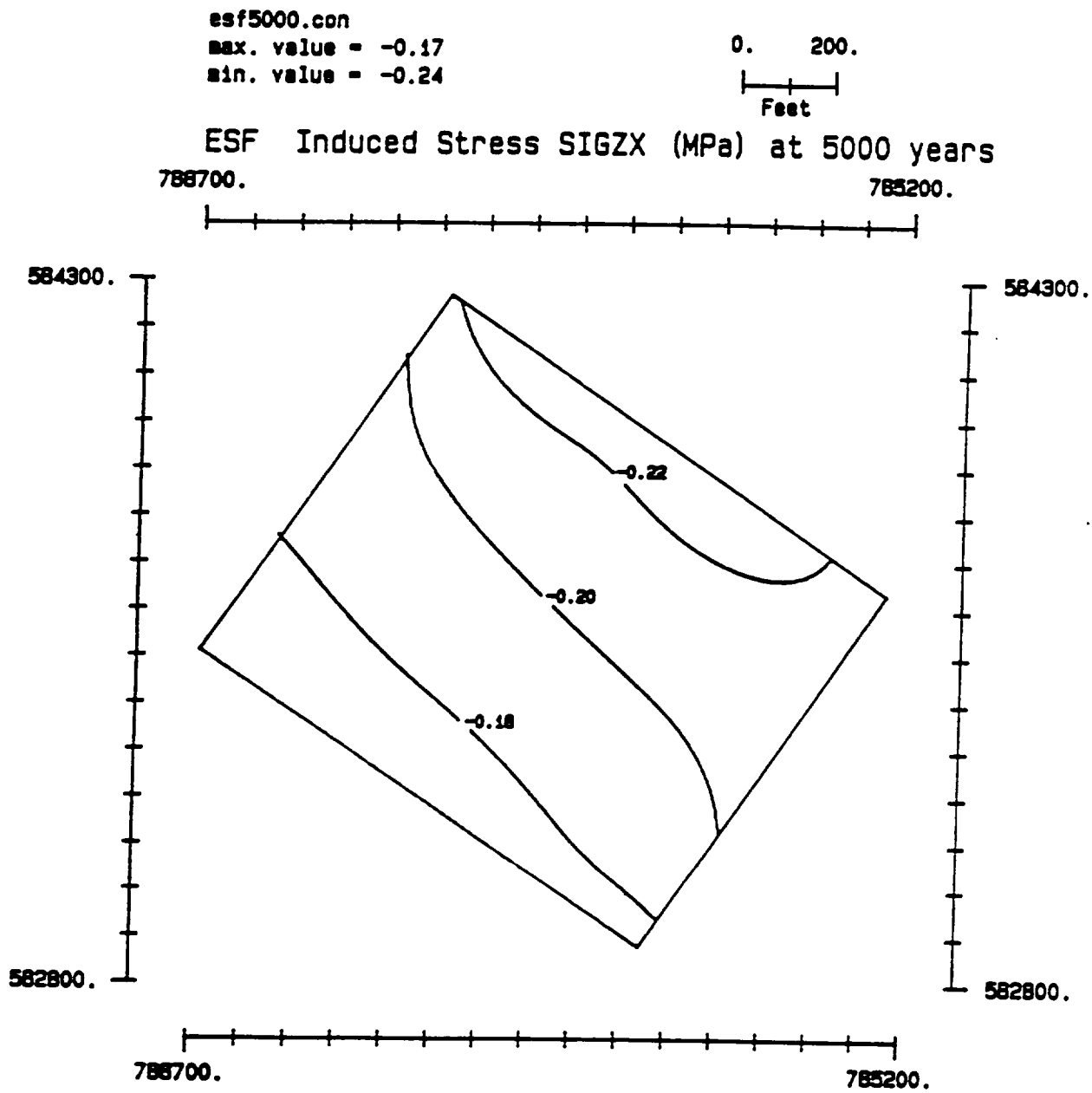

Figure B-69. Exploratory Shaft Facility: Changes in Shear Stress σ_{zx} 5,000 Years After Waste Emplacement Begins

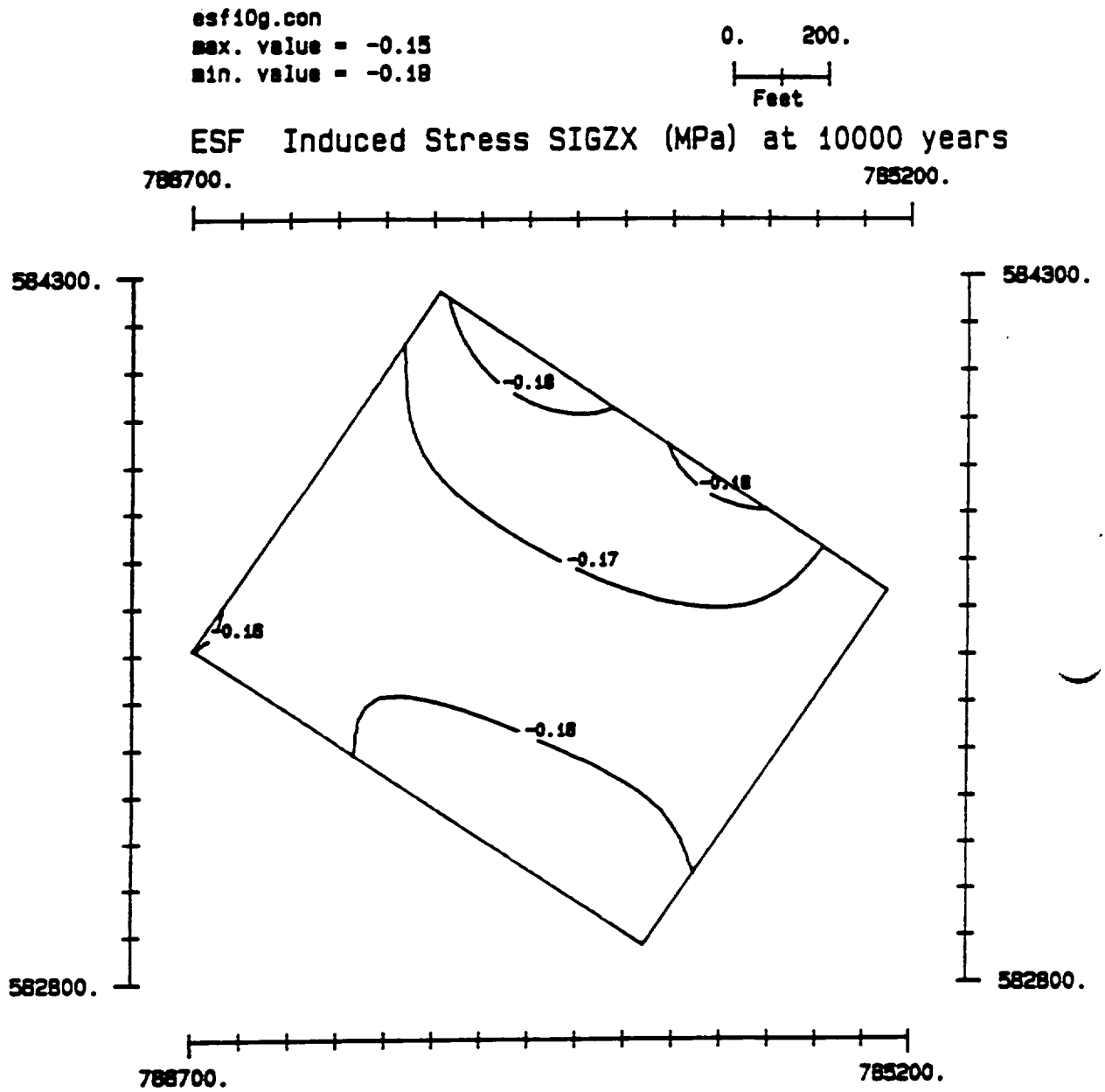

Figure B-70. Exploratory Shaft Facility: Changes in Shear Stress σ_{zx} 10,000 Years After Waste Emplacement Begins

APPENDIX C

Temperature and Induced Stresses ($\Delta\sigma_{xx}, \Delta\sigma_{yy}, \Delta\sigma_{zz}, \Delta\sigma_{xy}, \Delta\sigma_{yz}, \Delta\sigma_{zx}$) in the Upper Demonstration Breakout Room and the Calico Hills Drill Room for 10 to 10,000 Years After Waste Emplacement Begins

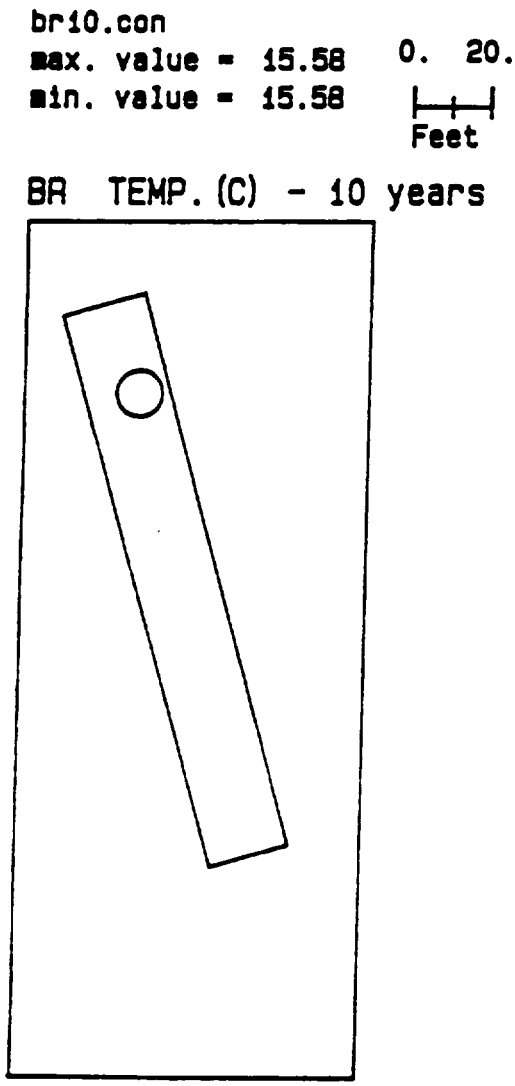

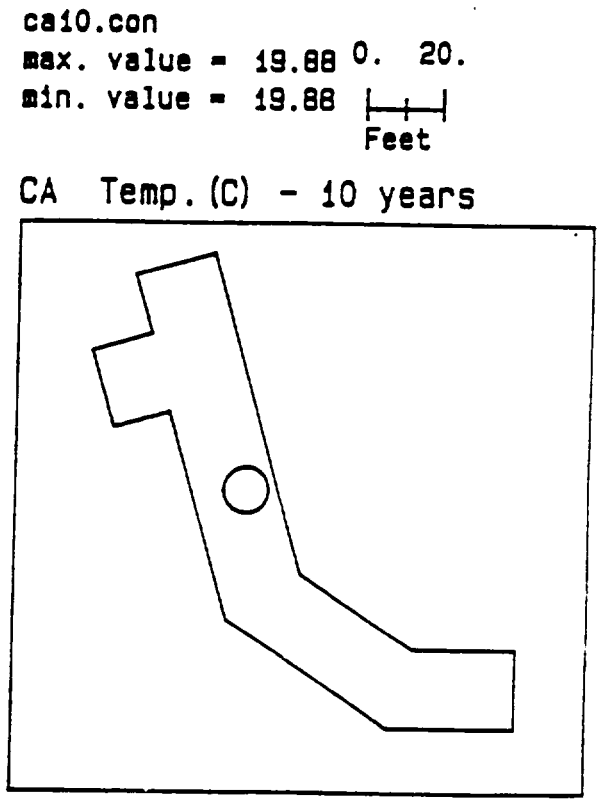

Figure C-1. Upper Demonstration Breakout Room (BR) and the Calico Hills Drill Room (CA): Temperatures at 10 Years After Waste Emplacement Begins

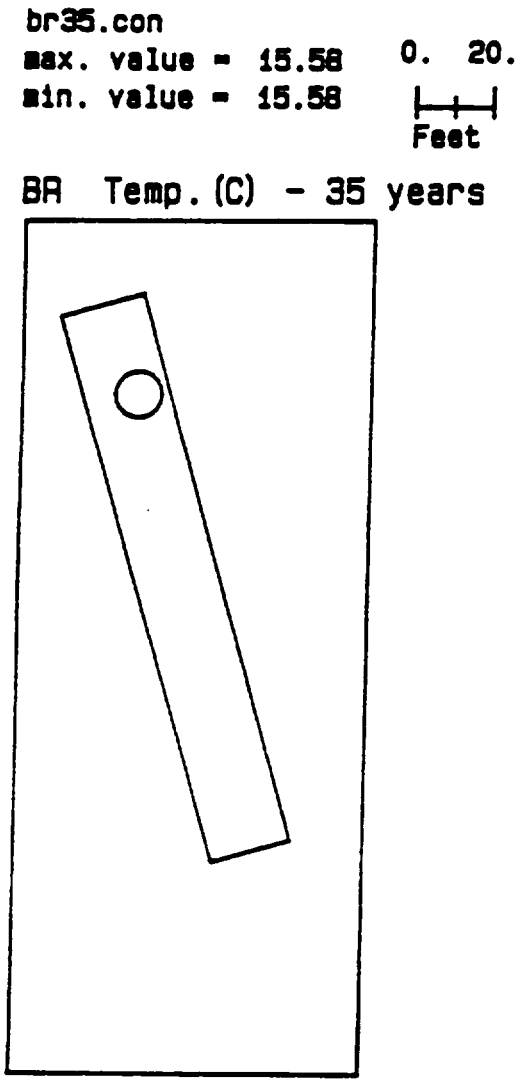

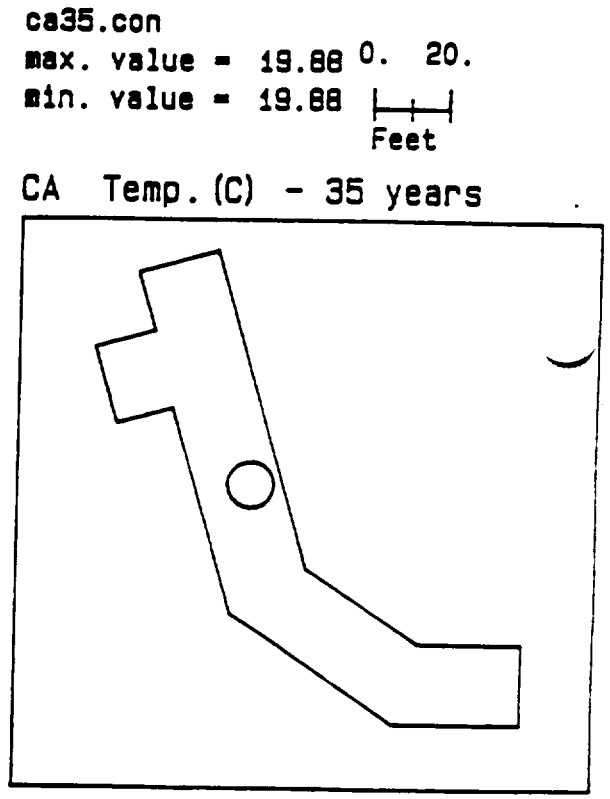

Figure C-2. Upper Demonstration Breakout Room (BR) and the Calico Hills Drill Room (CA): Temperatures at 35 Years After Waste Emplacement Begins

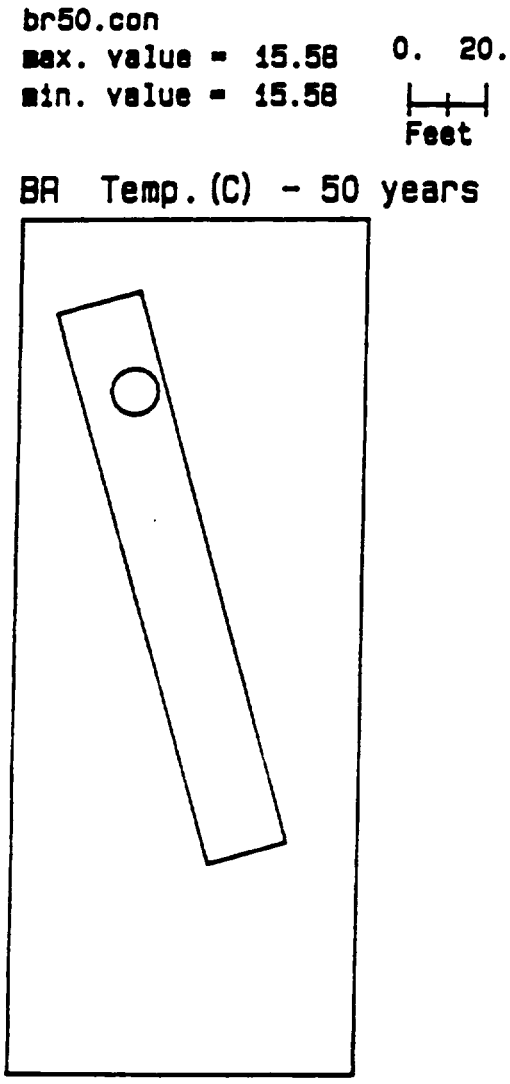

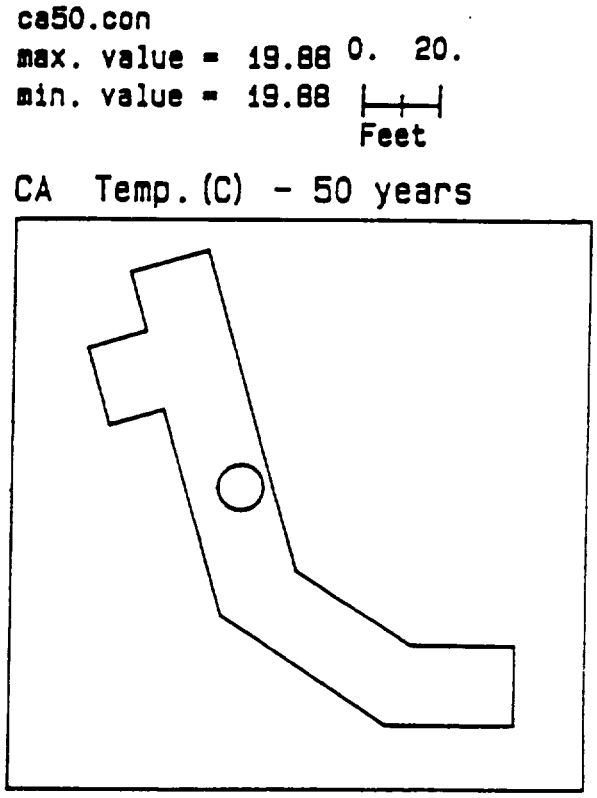

Figure C-3. Upper Demonstration Breakout Room (BR) and the Calico Hills Drill Room (CA): Temperatures at 50 Years After Waste Emplacement Begins

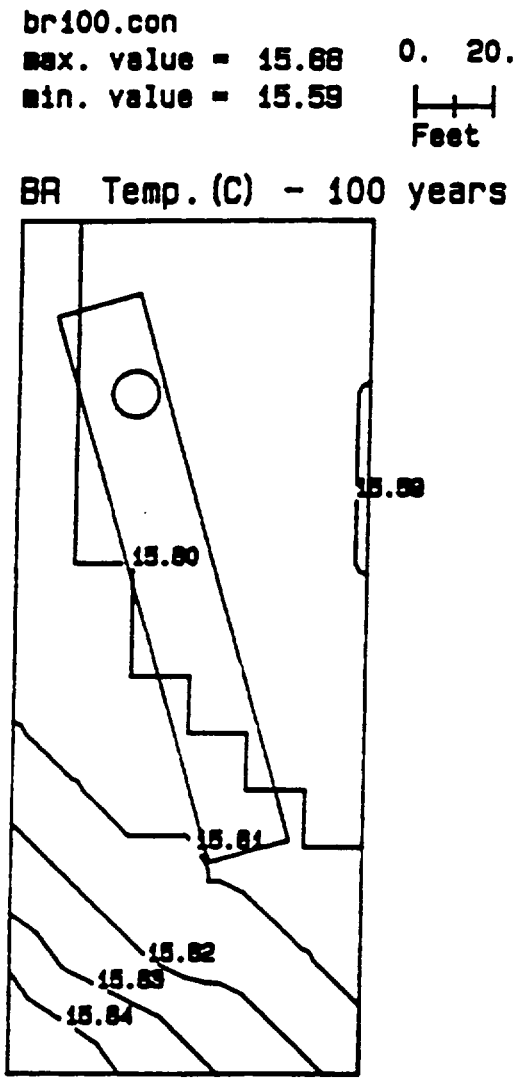

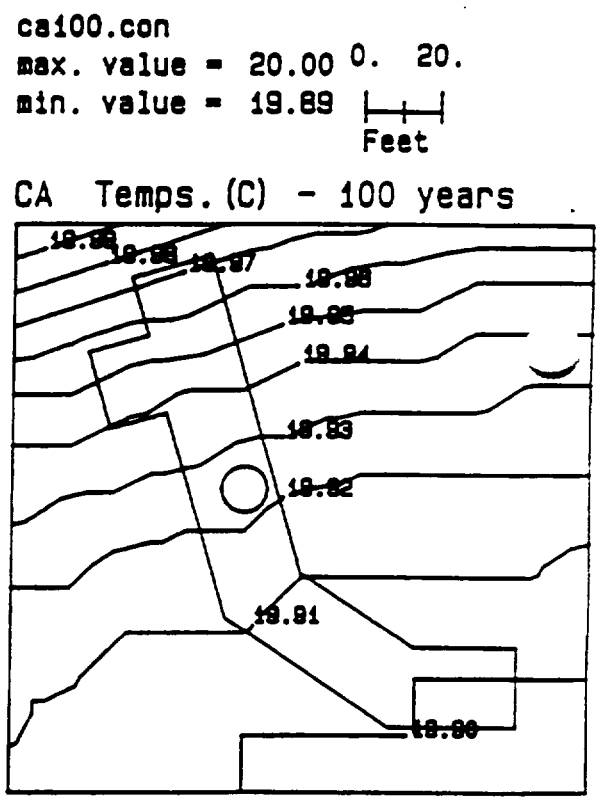

Figure C-4. Upper Demonstration Breakout Room (BR) and the Calico Hills Drill Room (CA): Temperatures at 100 Years After Waste Emplacement Begins

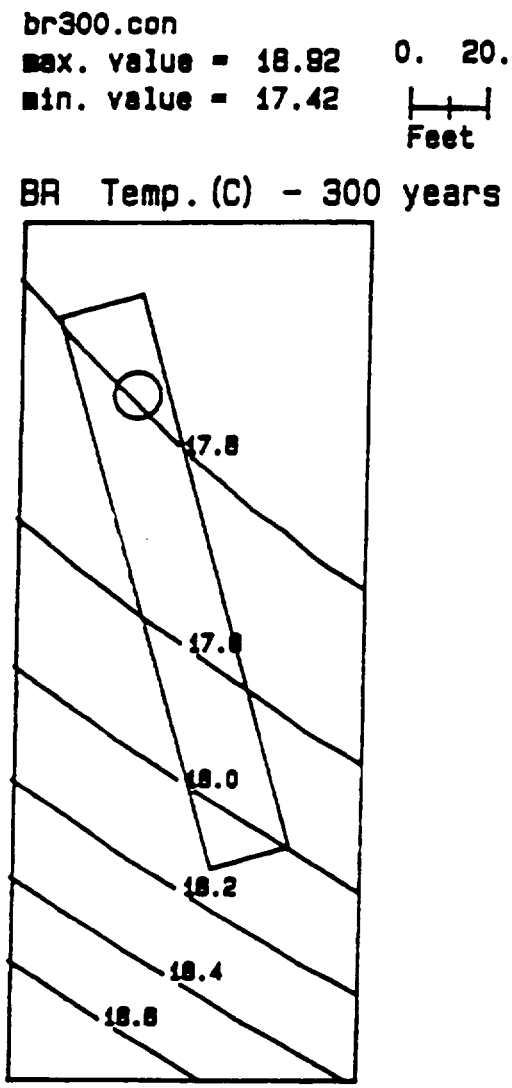

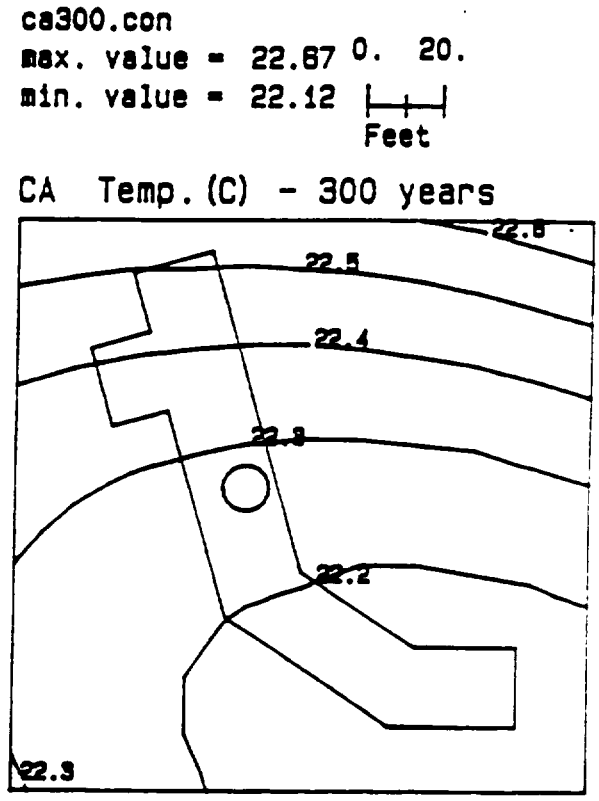

Figure C-5. Upper Demonstration Breakout Room (BR) and the Calico Hills Drill Room (CA): Temperatures at 300 Years After Waste Emplacement Begins

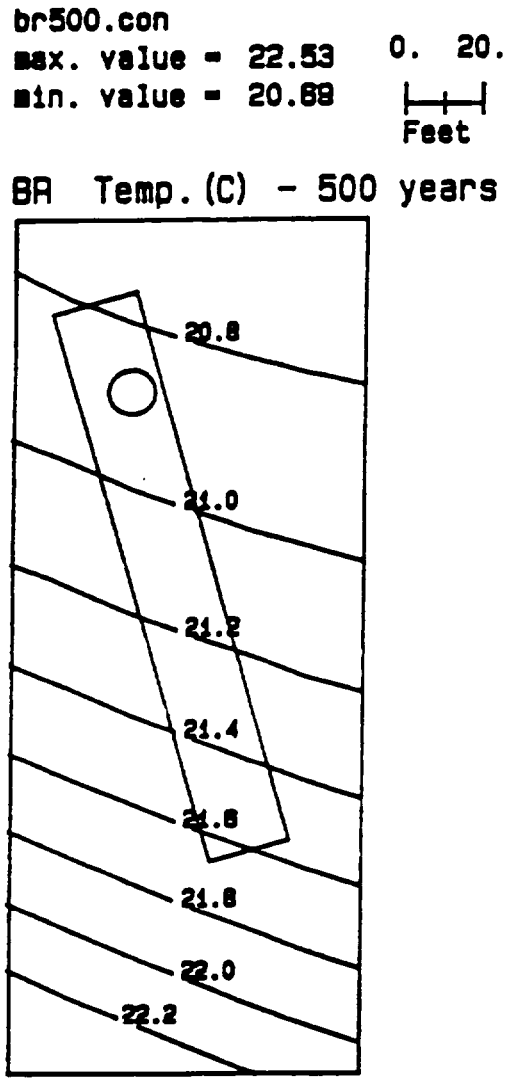

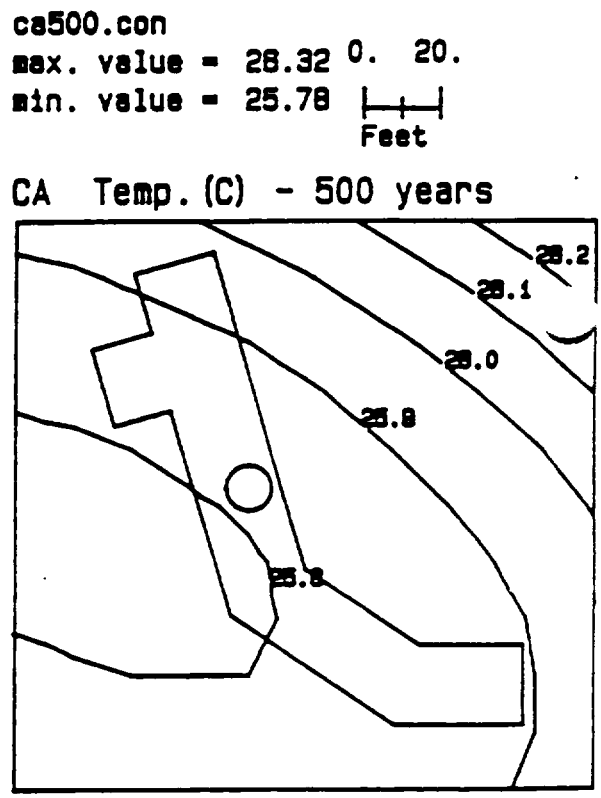

Figure C-6. Upper Demonstration Breakout Room (BR) and the Calico Hills Drill Room (CA): Temperatures at 500 Years After Waste Emplacement Begins

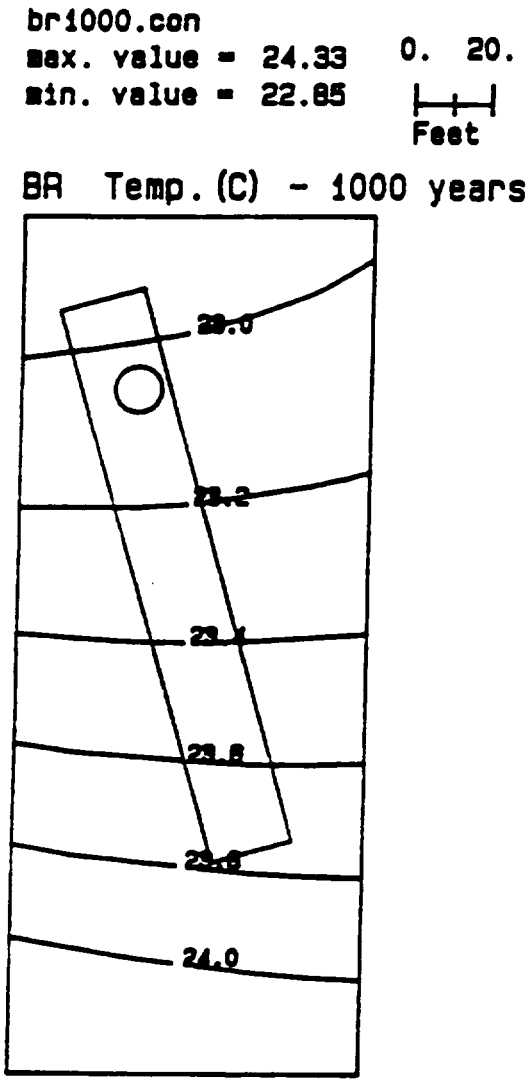

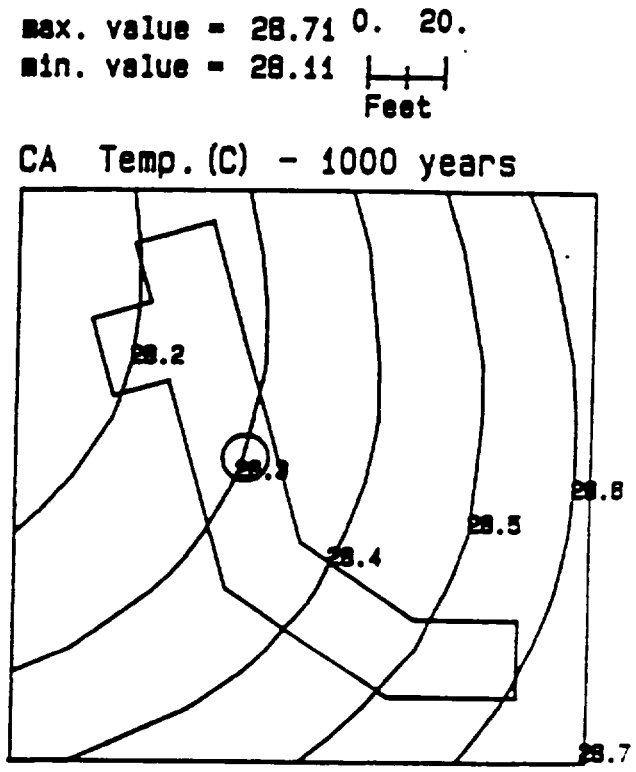

Figure C-7. Upper Demonstration Breakout Room (BR) and the Calico Hills Drill Room (CA): Temperatures at 1,000 Years After Waste Emplacement Begins

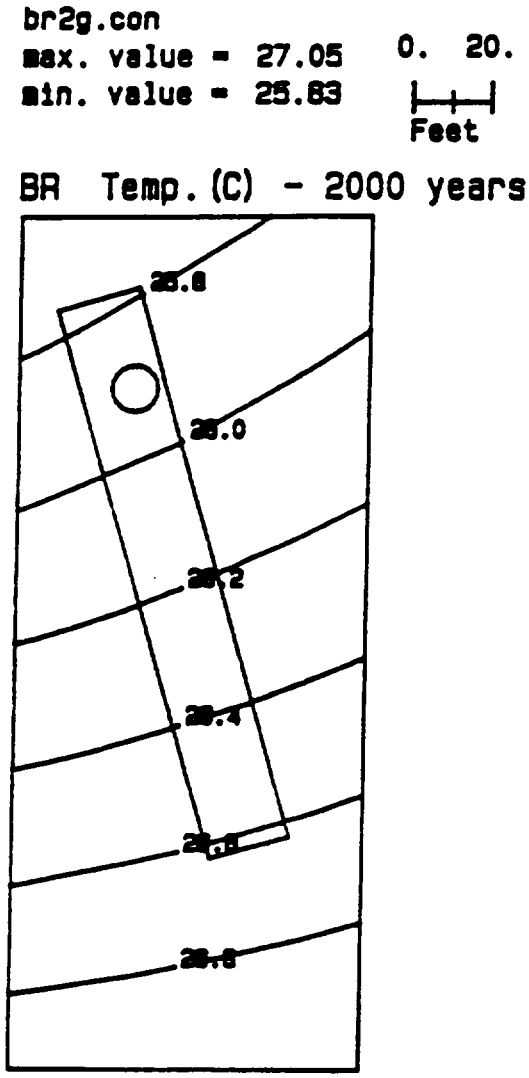

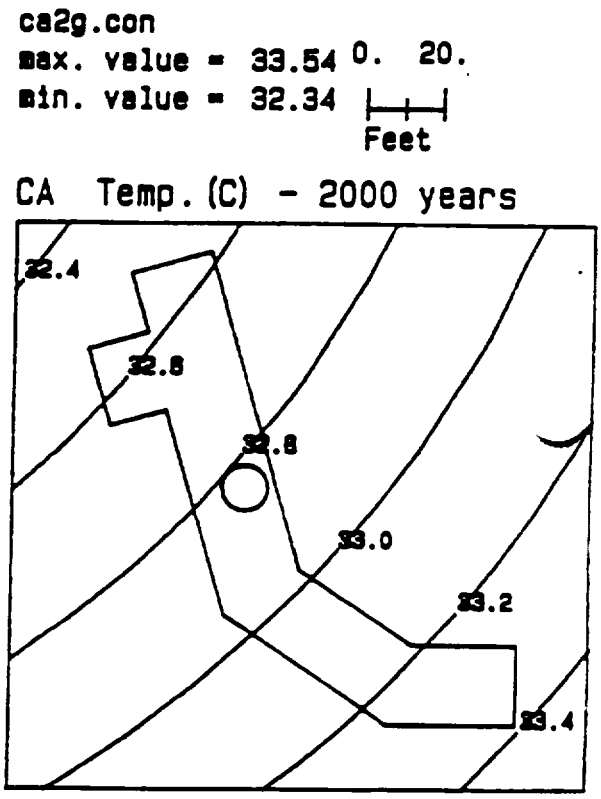

Figure C-8. Upper Demonstration Breakout Room (BR) and the Calico Hills Drill Room (CA): Temperatures at 2,000 Years After Waste Emplacement Begins

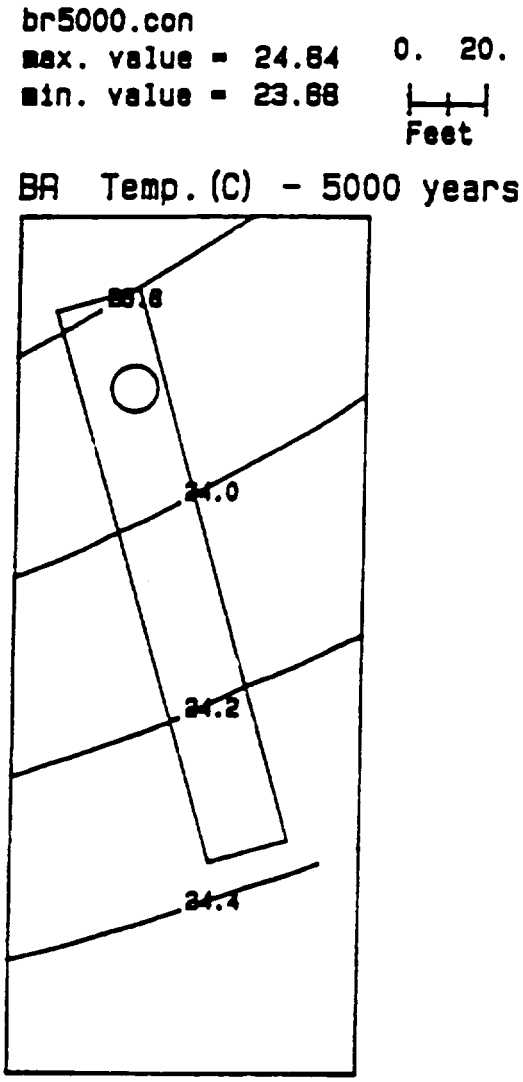

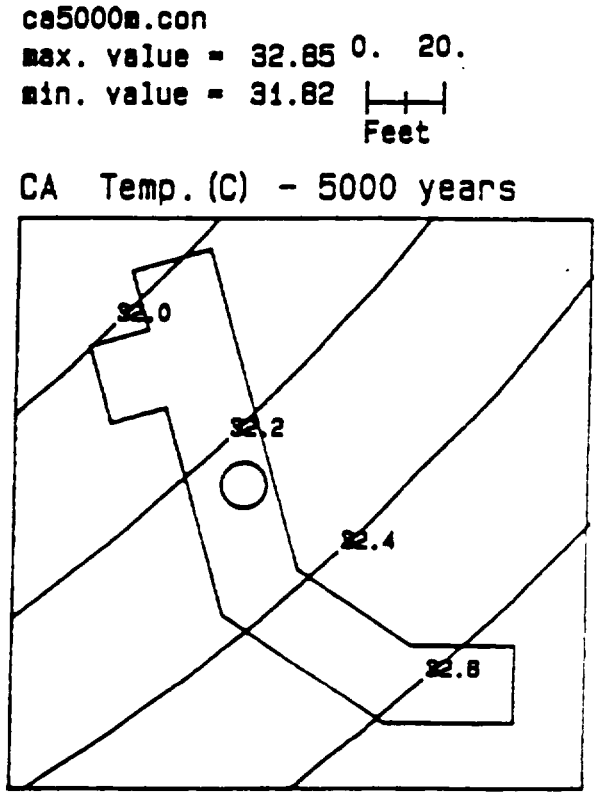

Figure C-9. Upper Demonstration Breakout Room (BR) and the Calico Hills Drill Room (CA): Temperatures at 5,000 Years After Waste Emplacement Begins

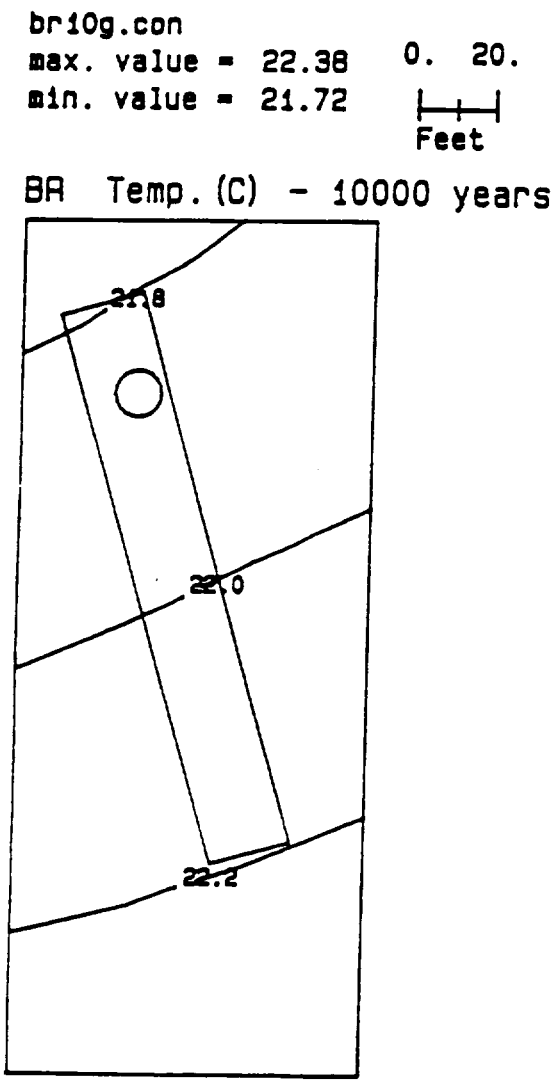

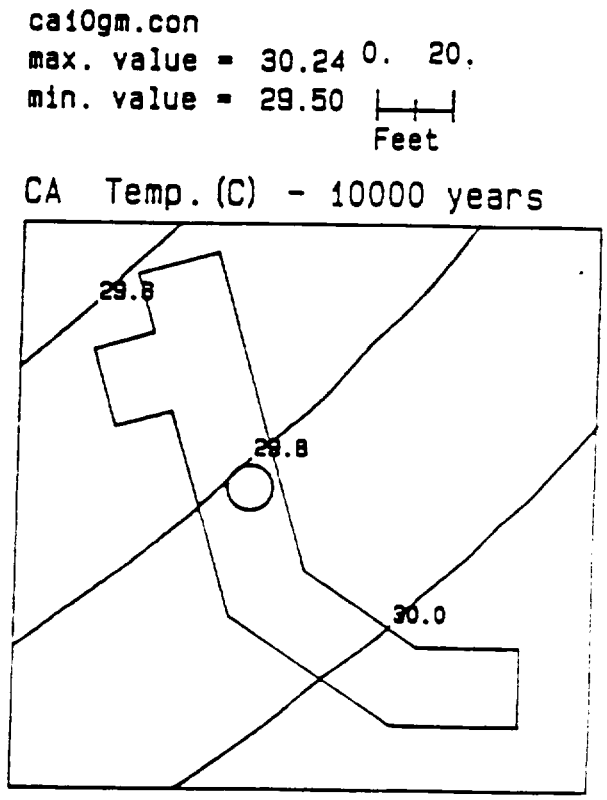

Figure C-10. Upper Demonstration Breakout Room (BR) and the Calico Hills Drill Room (CA): Temperatures at 10,000 Years After Waste Emplacement Begins

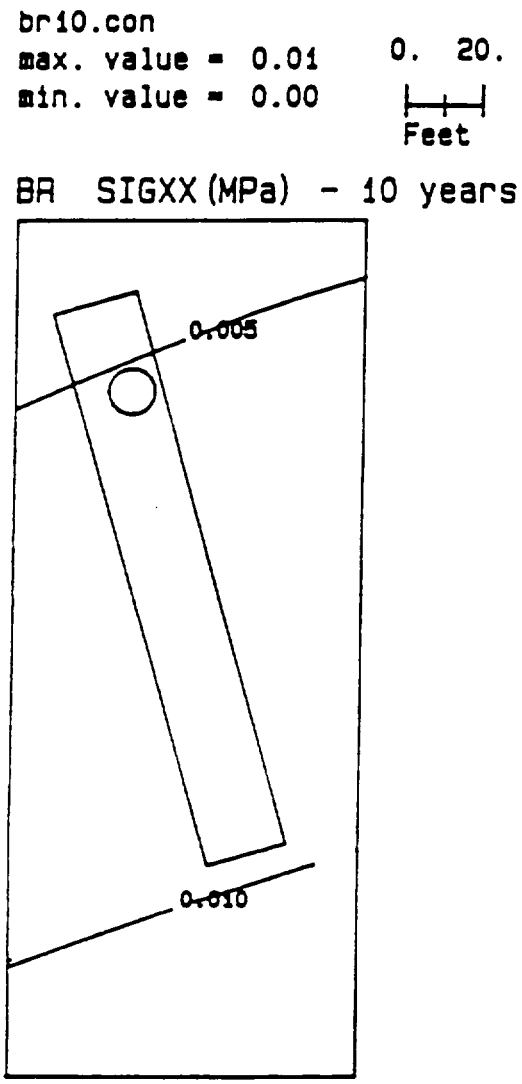

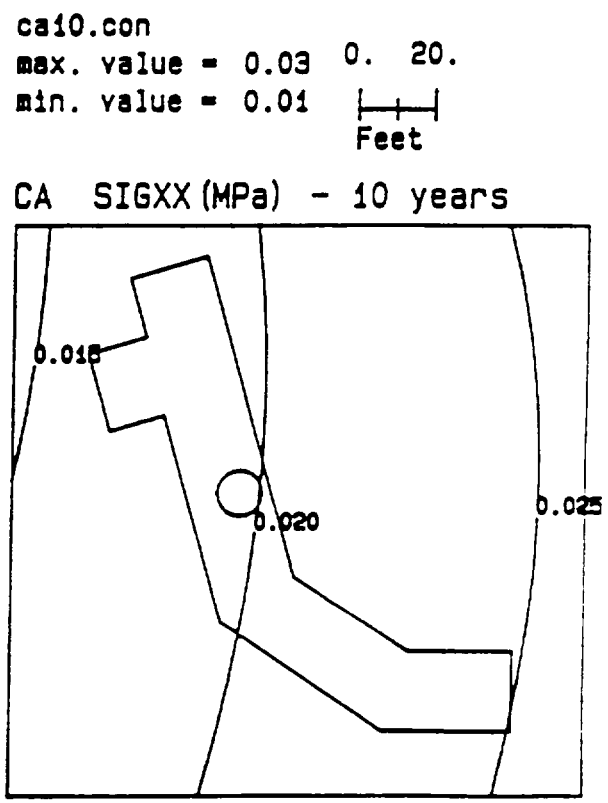

Figure C-11. Upper Demonstration Breakout Room (BR) and the Calico Hills Drill Room (CA): Changes in Normal Stress σ_{xx} at 10 Years After Waste Emplacement Begins

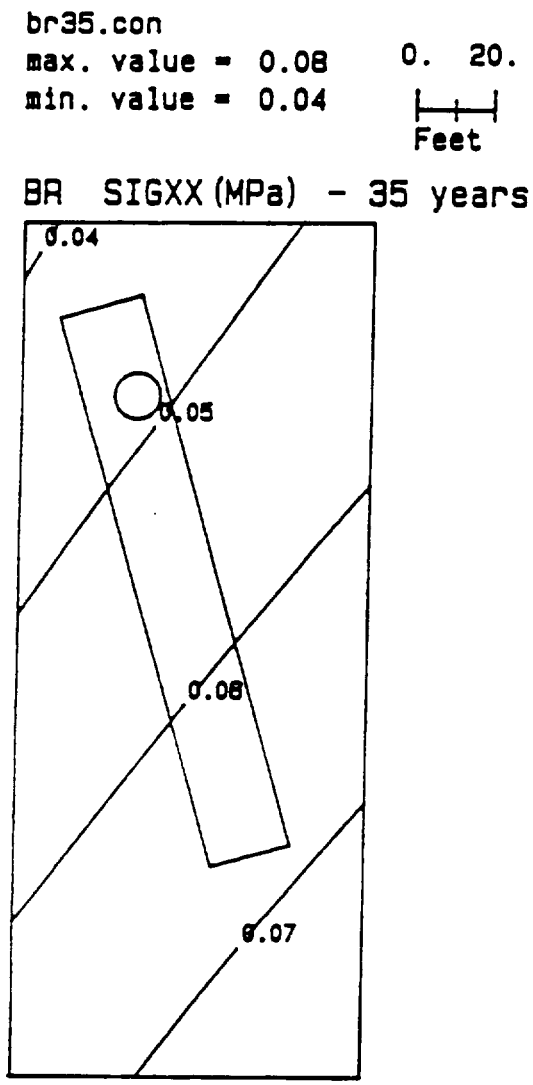

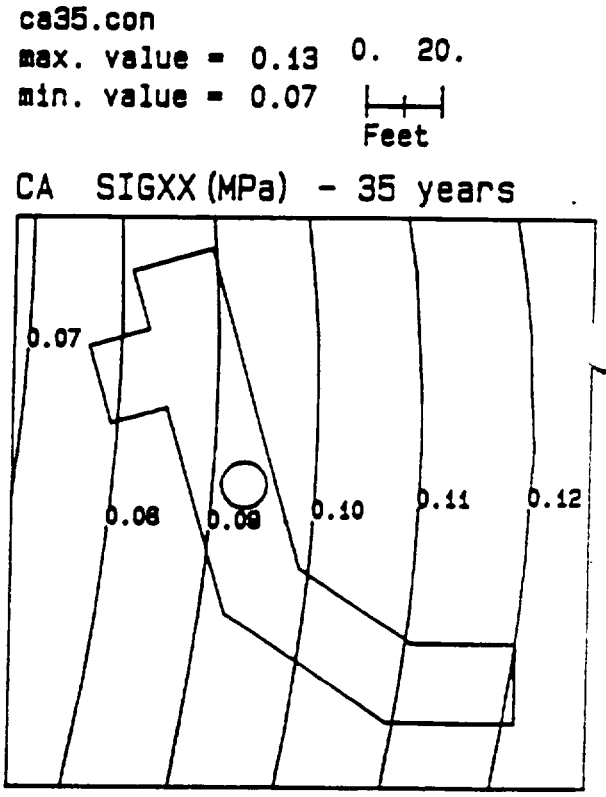

Figure C-12. Upper Demonstration Breakout Room (BR) and the Calico Hills Drill Room (CA): Changes in Normal Stress σ_{xx} at 35 Years After Waste Emplacement Begins

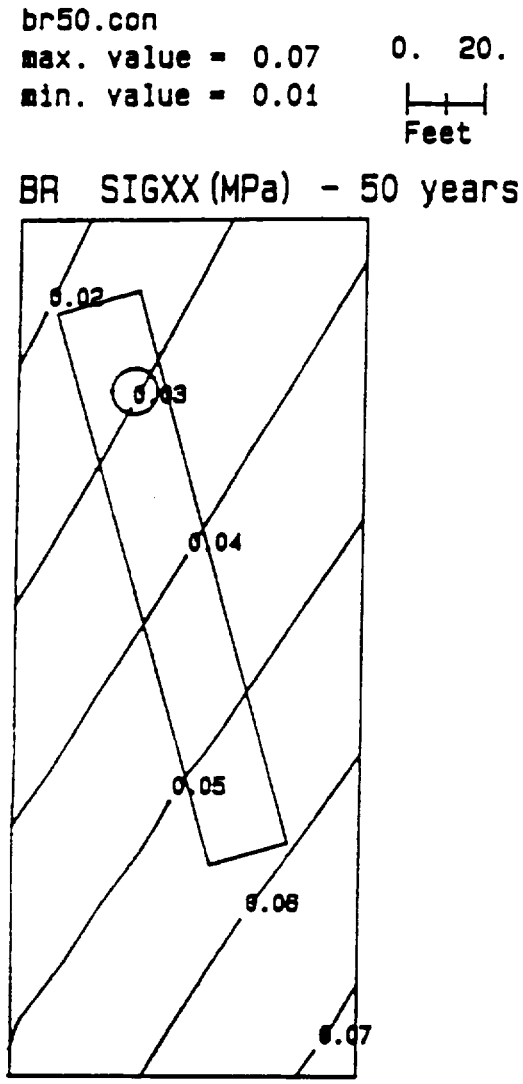

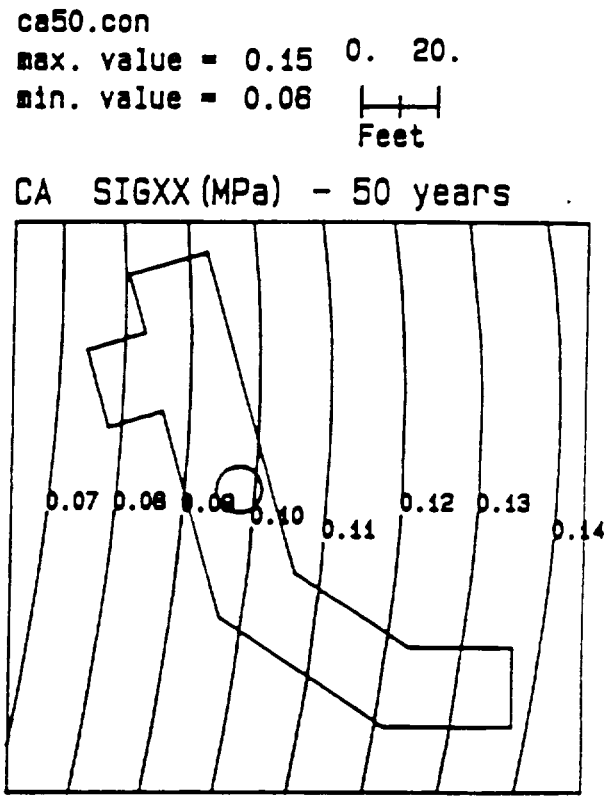

Figure C-13. Upper Demonstration Breakout Room (BR) and the Calico Hills Drill Room (CA): Changes in Normal Stress σ_{xx} at 50 Years After Waste Emplacement Begins

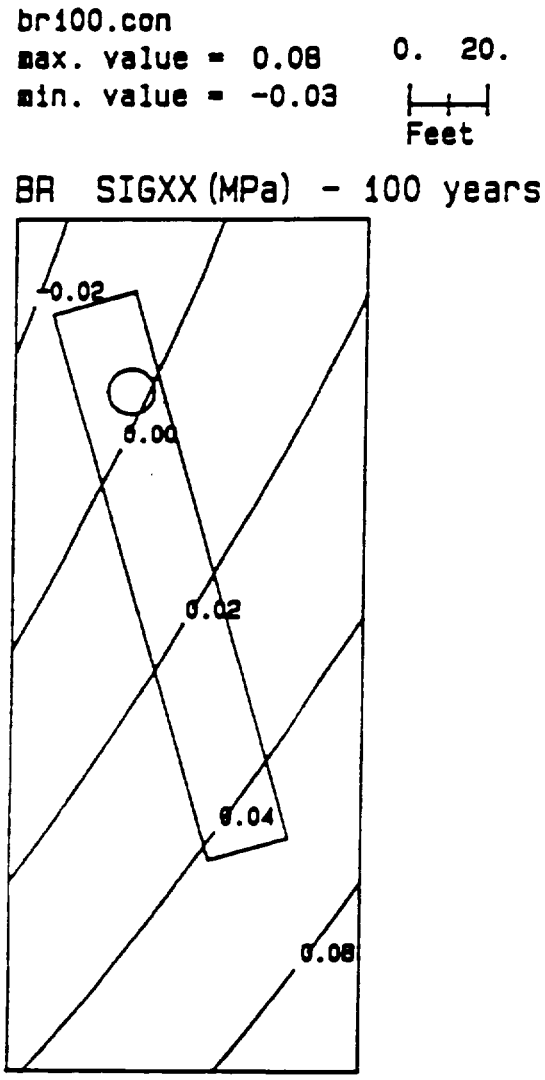

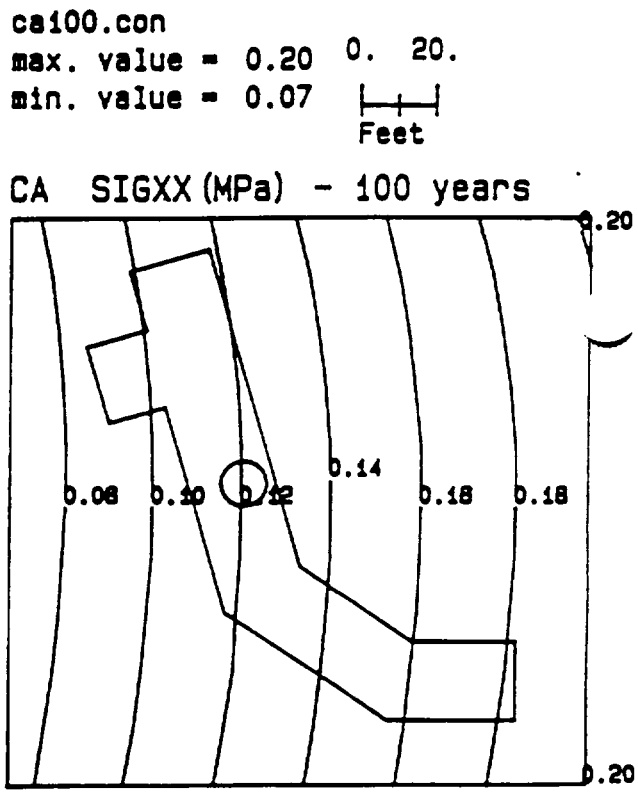

Figure C-14. Upper Demonstration Breakout Room (BR) and the Calico Hills Drill Room (CA): Changes in Normal Stress σ_{xx} at 100 Years After Waste Emplacement Begins

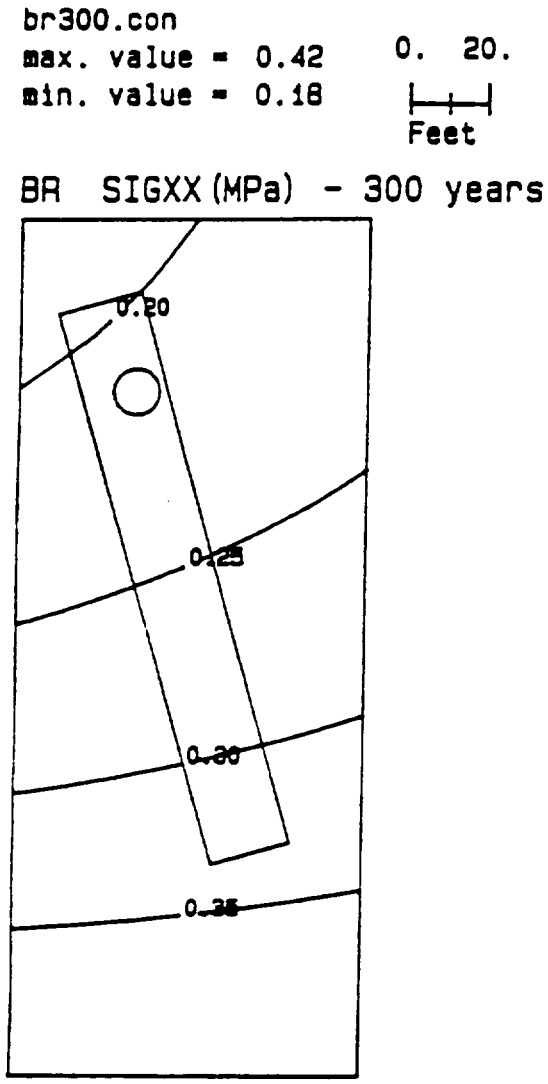

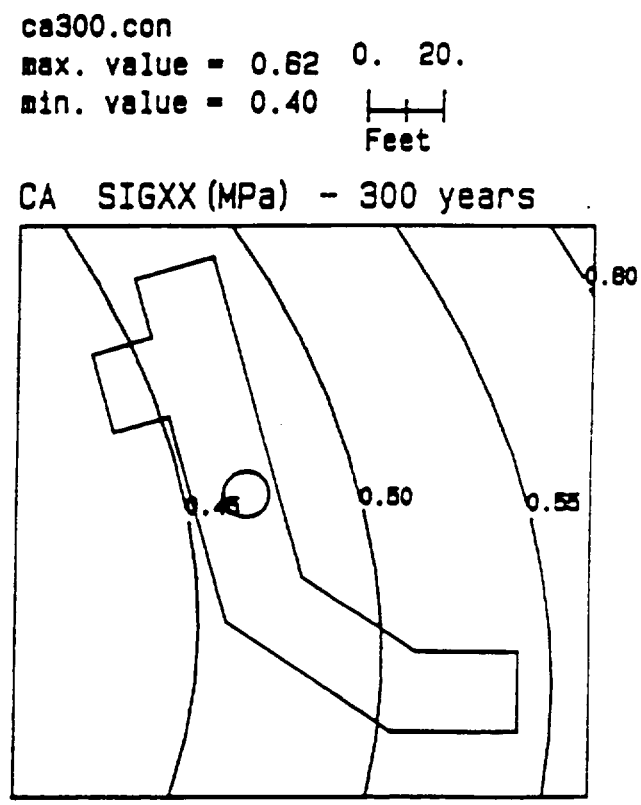

Figure C-15. Upper Demonstration Breakout Room (BR) and the Calico Hills Drill Room (CA): Changes in Normal Stress σ_{xx} at 300 Years After Waste Emplacement Begins

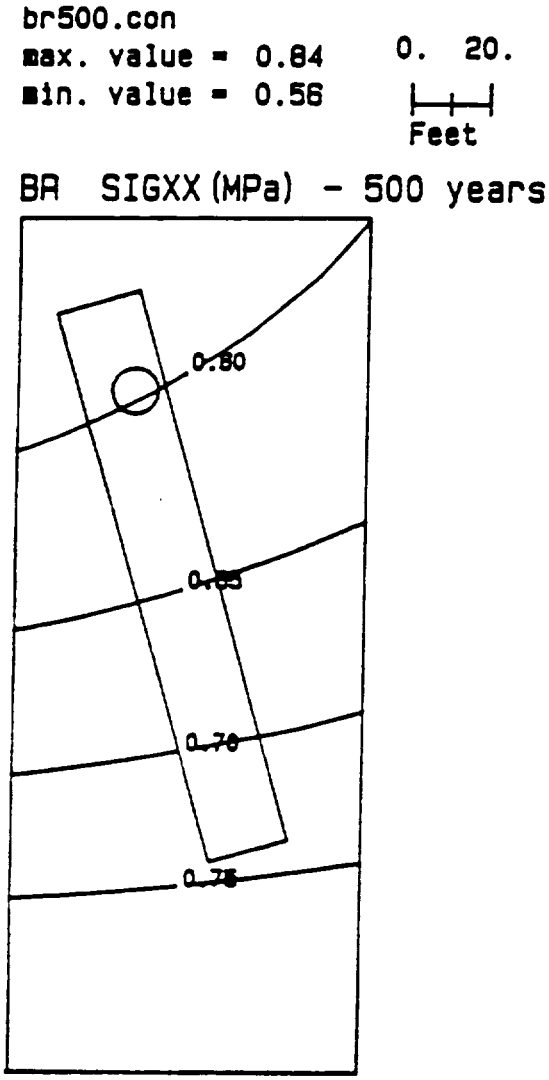

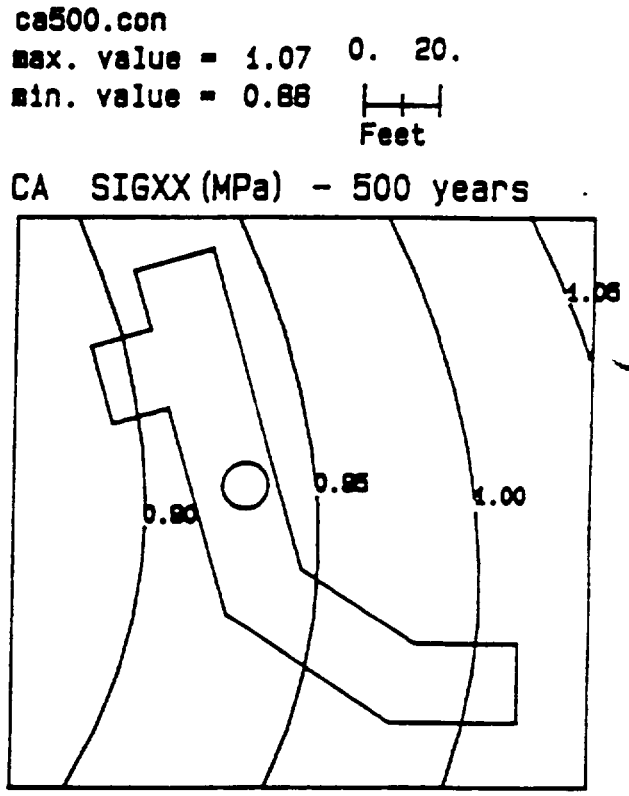

Figure C-16. Upper Demonstration Breakout Room (BR) and the Calico Hills Drill Room (CA): Changes in Normal Stress σ_{xx} at 500 Years After Waste Emplacement Begins

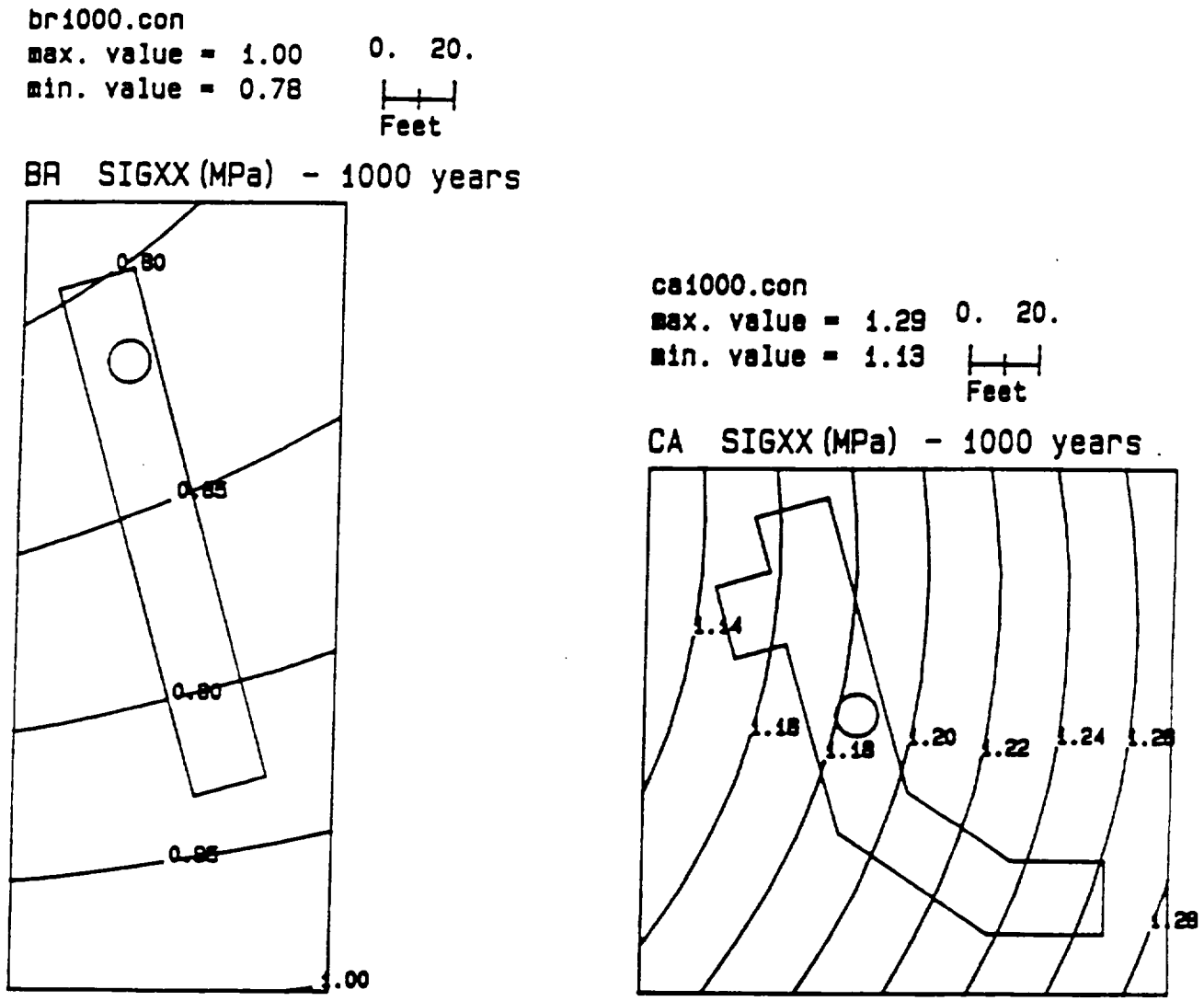

Figure C-17. Upper Demonstration Breakout Room (BR) and the Calico Hills Drill Room (CA): Changes in Normal Stress σ_{xx} at 1,000 Years After Waste Emplacement Begins

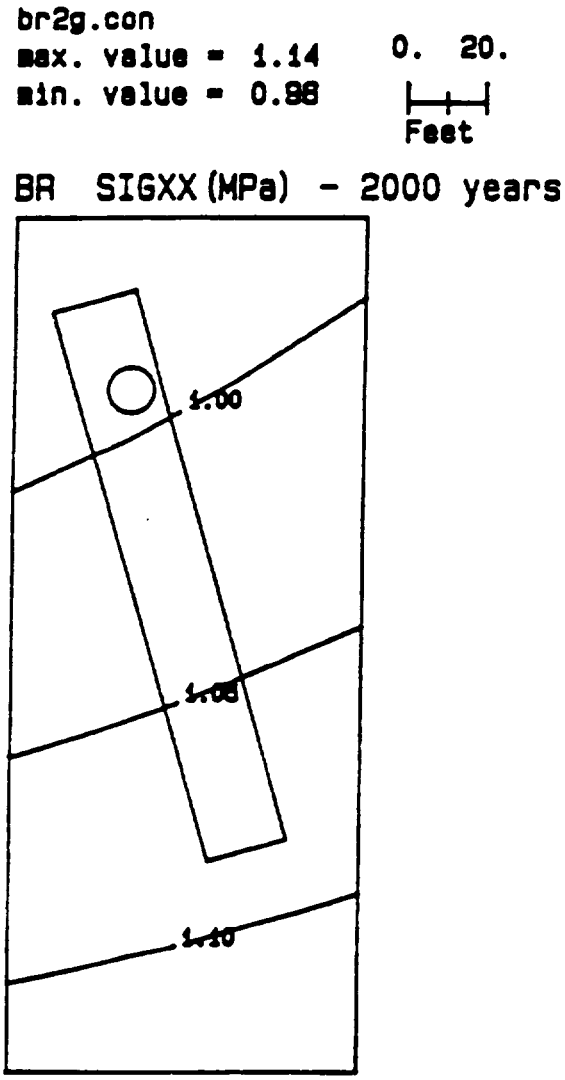

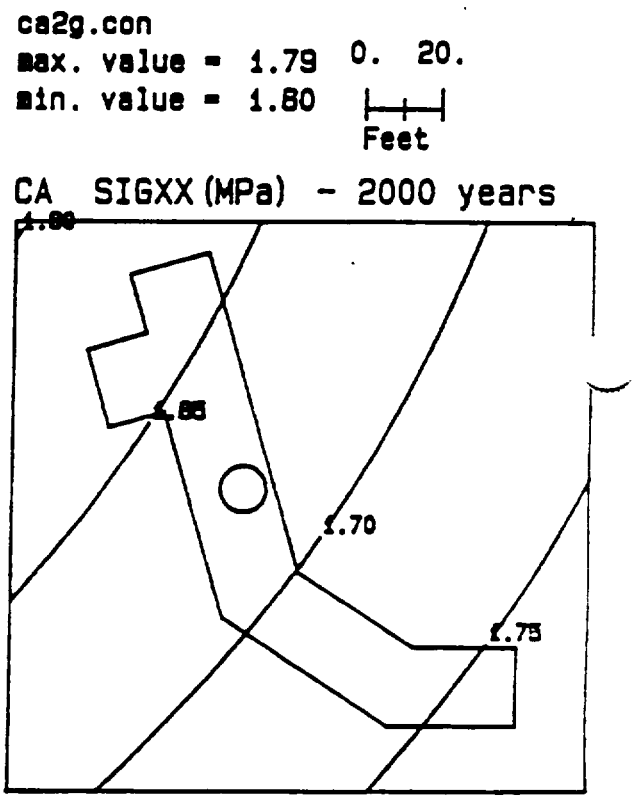

Figure C-18. Upper Demonstration Breakout Room (BR) and the Calico Hills Drill Room (CA): Changes in Normal Stress σ_{xx} at 2,000 Years After Waste Emplacement Begins

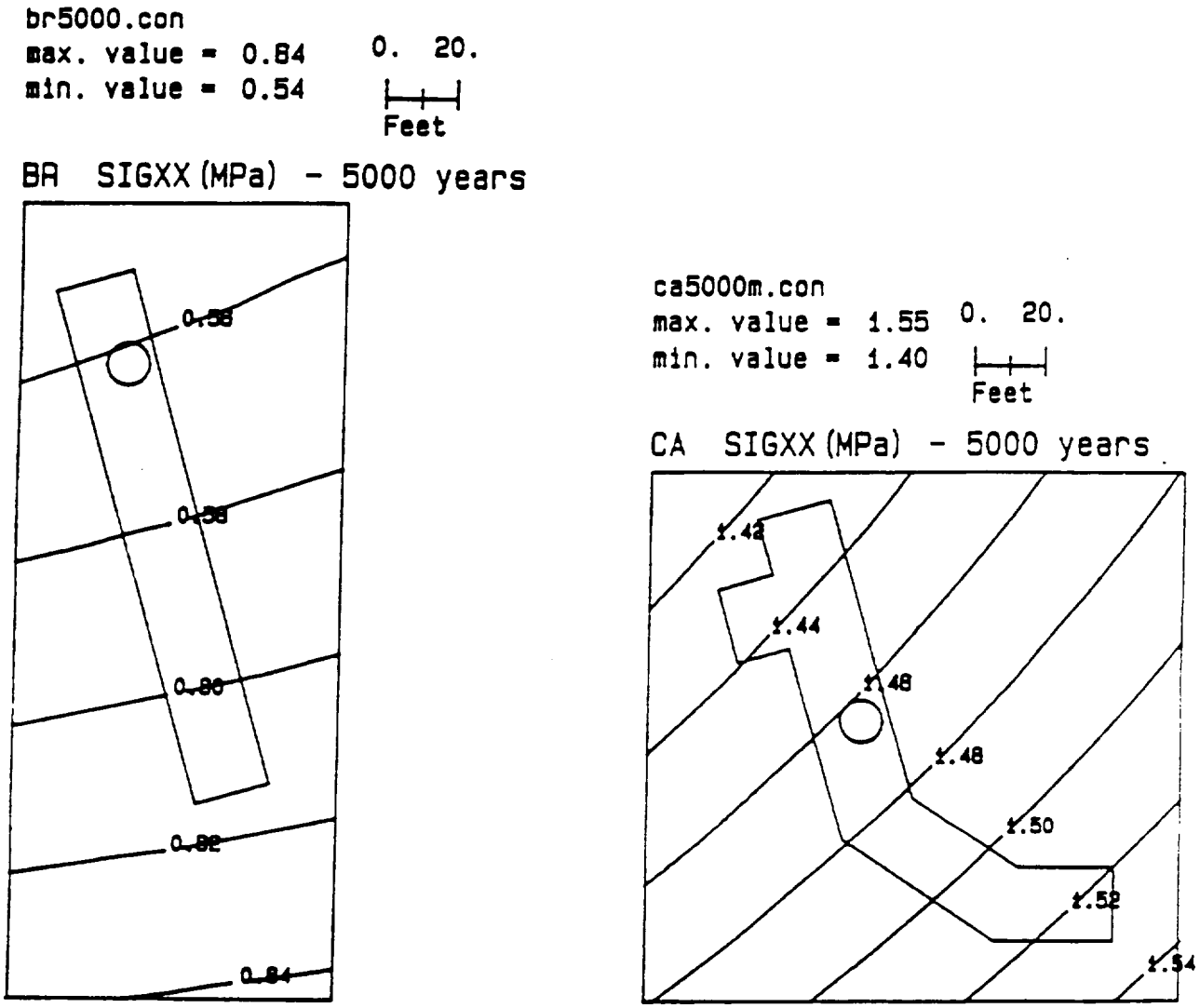

Figure C-19. Upper Demonstration Breakout Room (BR) and the Calico Hills Drill Room (CA): Changes in Normal Stress σ_{xx} at 5,000 Years After Waste Emplacement Begins

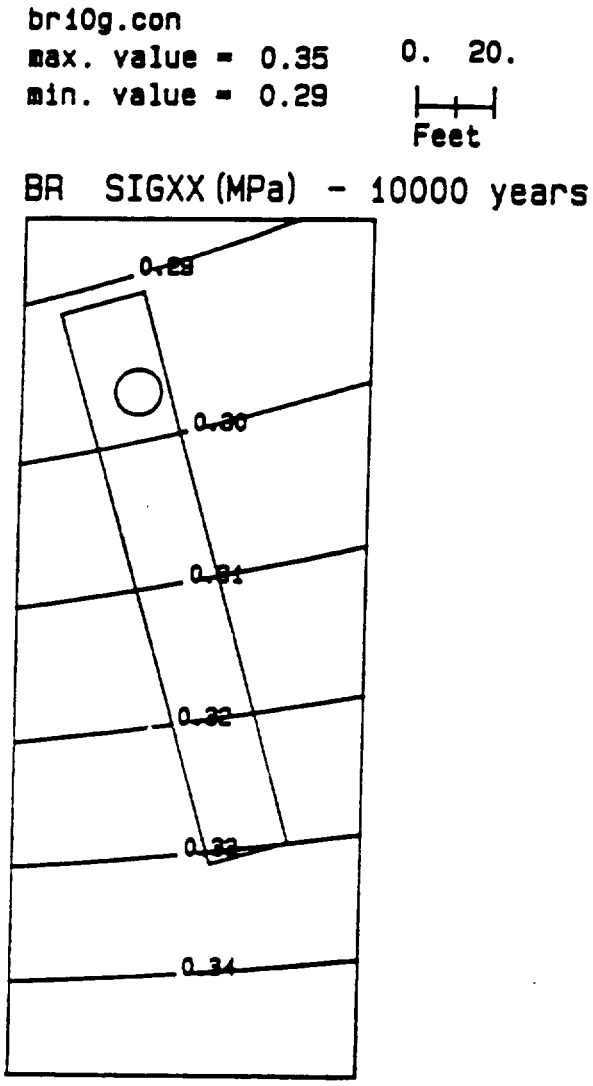

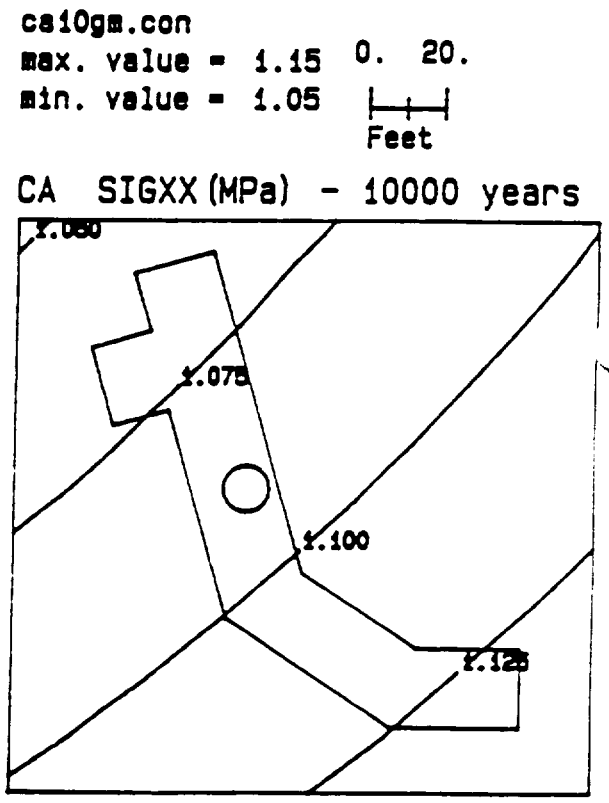

Figure C-20. Upper Demonstration Breakout Room (BR) and the Calico Hills Drill Room (CA): Changes in Normal Stress σ_{xx} at 10,000 Years After Waste Emplacement Begins

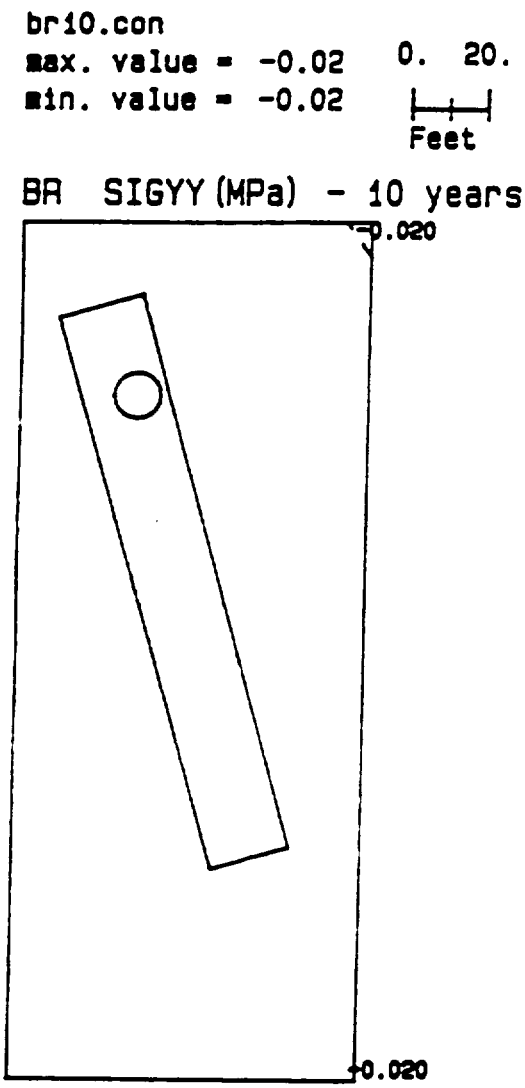

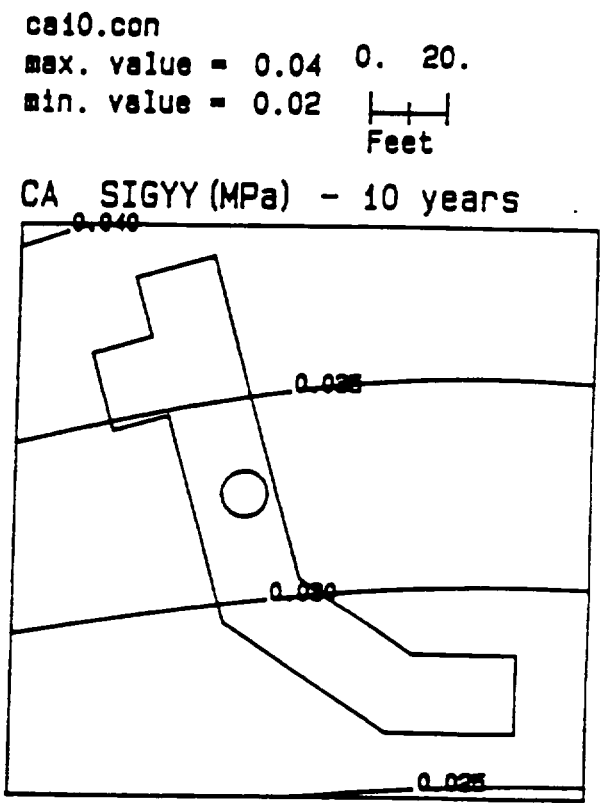

Figure C-21. Upper Demonstration Breakout Room (BR) and the Calico Hills Drill Room (CA): Changes in Normal Stress σ_{yy} at 10 Years After Waste Emplacement Begins

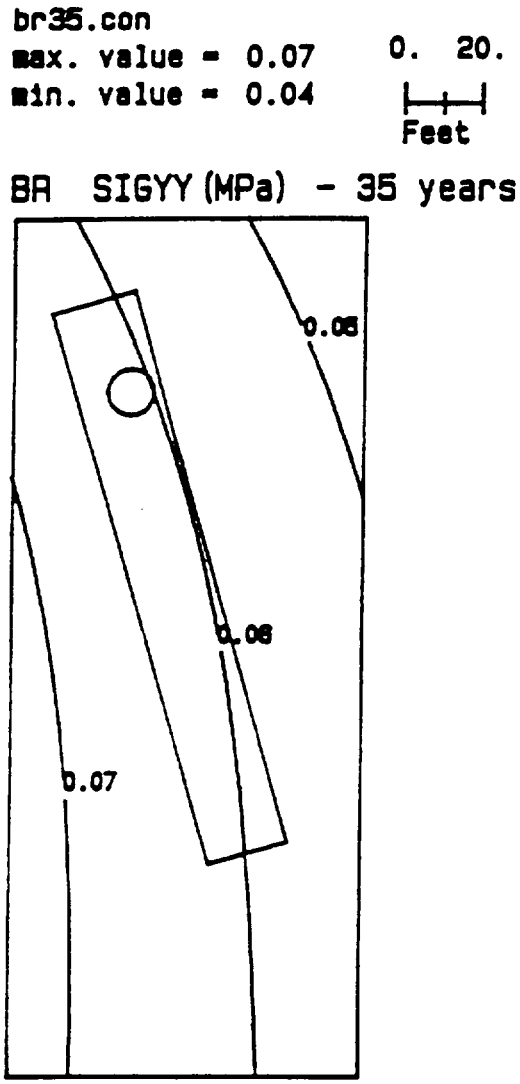

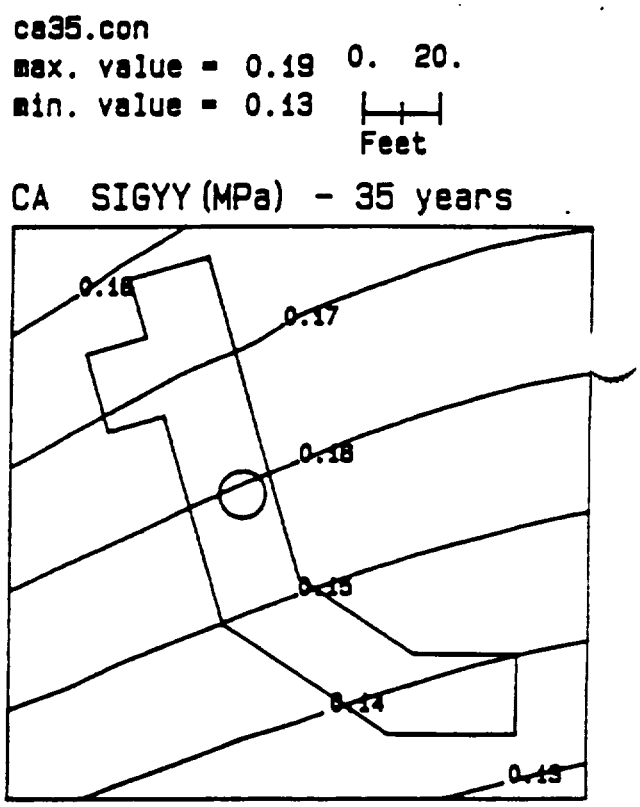

Figure C-22. Upper Demonstration Breakout Room (BR) and the Calico Hills Drill Room (CA): Changes in Normal Stress σ_{yy} at 35 Years After Waste Emplacement Begins

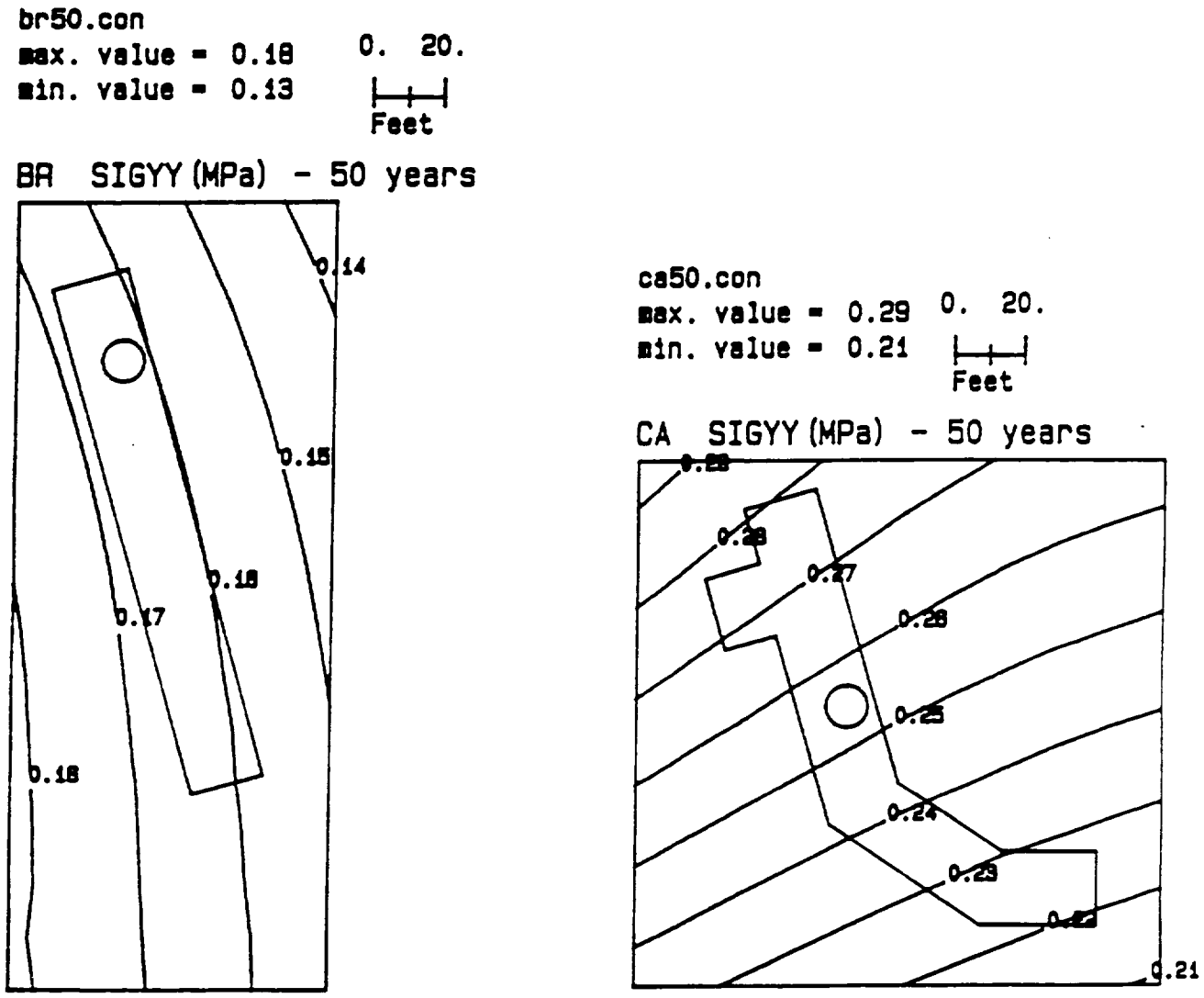

Figure C-23. Upper Demonstration Breakout Room (BR) and the Calico Hills Drill Room (CA): Changes in Normal Stress σ_{yy} at 50 Years After Waste Emplacement Begins

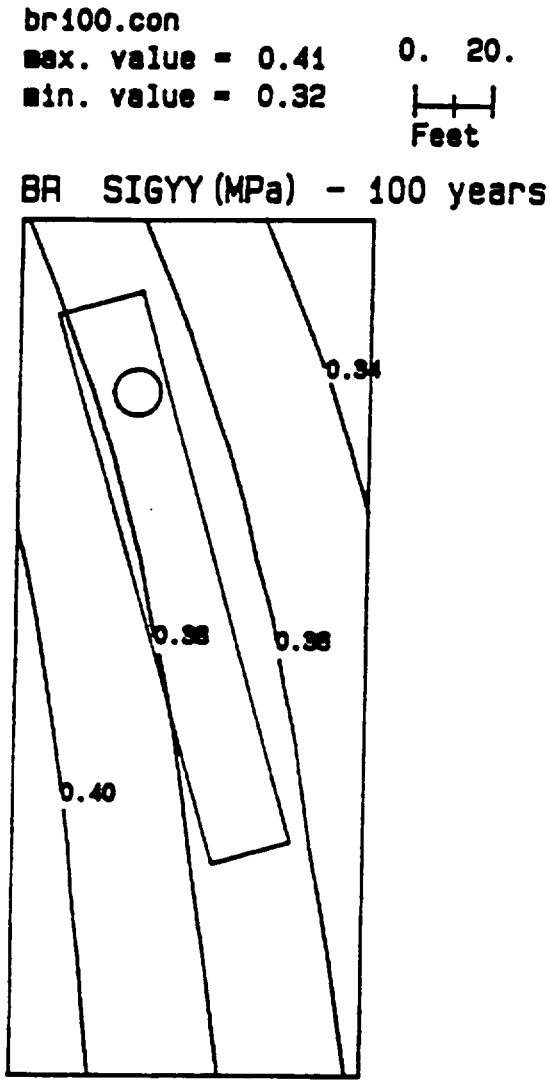

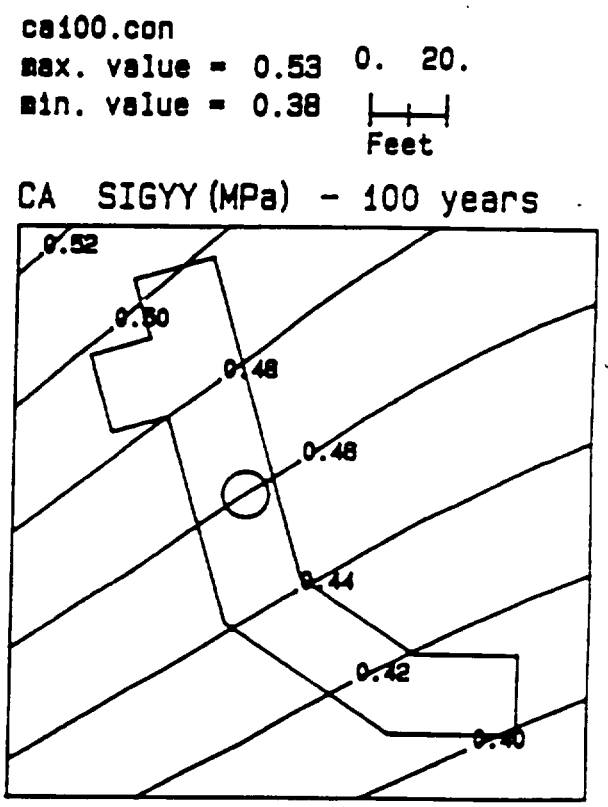

Figure C-24. Upper Demonstration Breakout Room (BR) and the Calico Hills Drill Room (CA): Changes in Normal Stress σ_{yy} at 100 Years After Waste Emplacement Begins

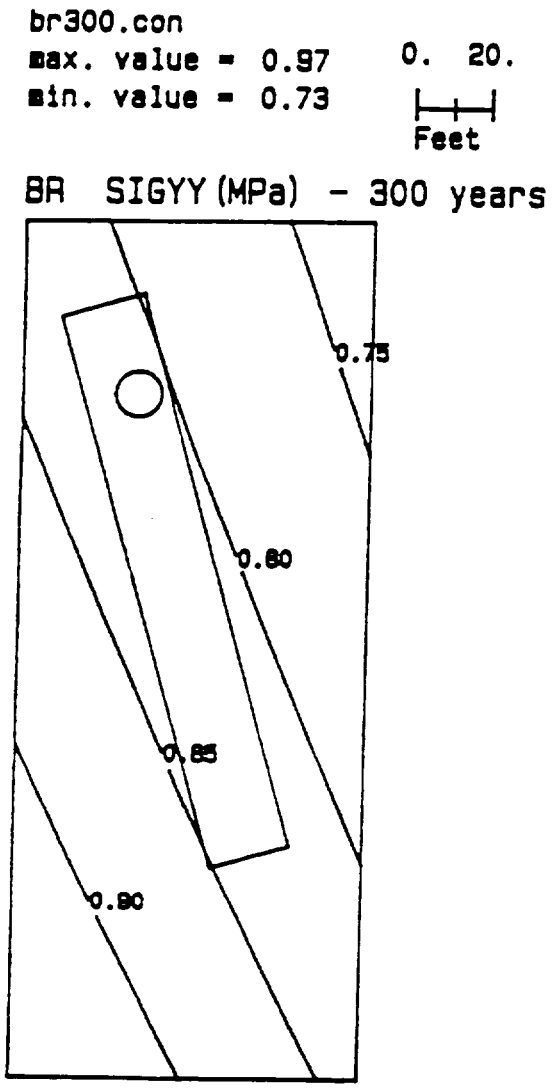

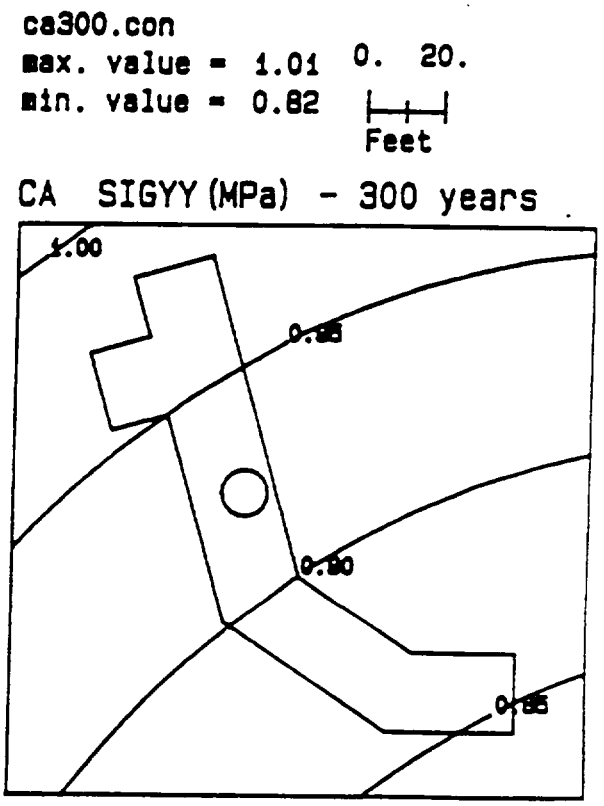

Figure C-25. Upper Demonstration Breakout Room (BR) and the Calico Hills Drill Room (CA): Changes in Normal Stress σ_{yy} at 300 Years After Waste Emplacement Begins

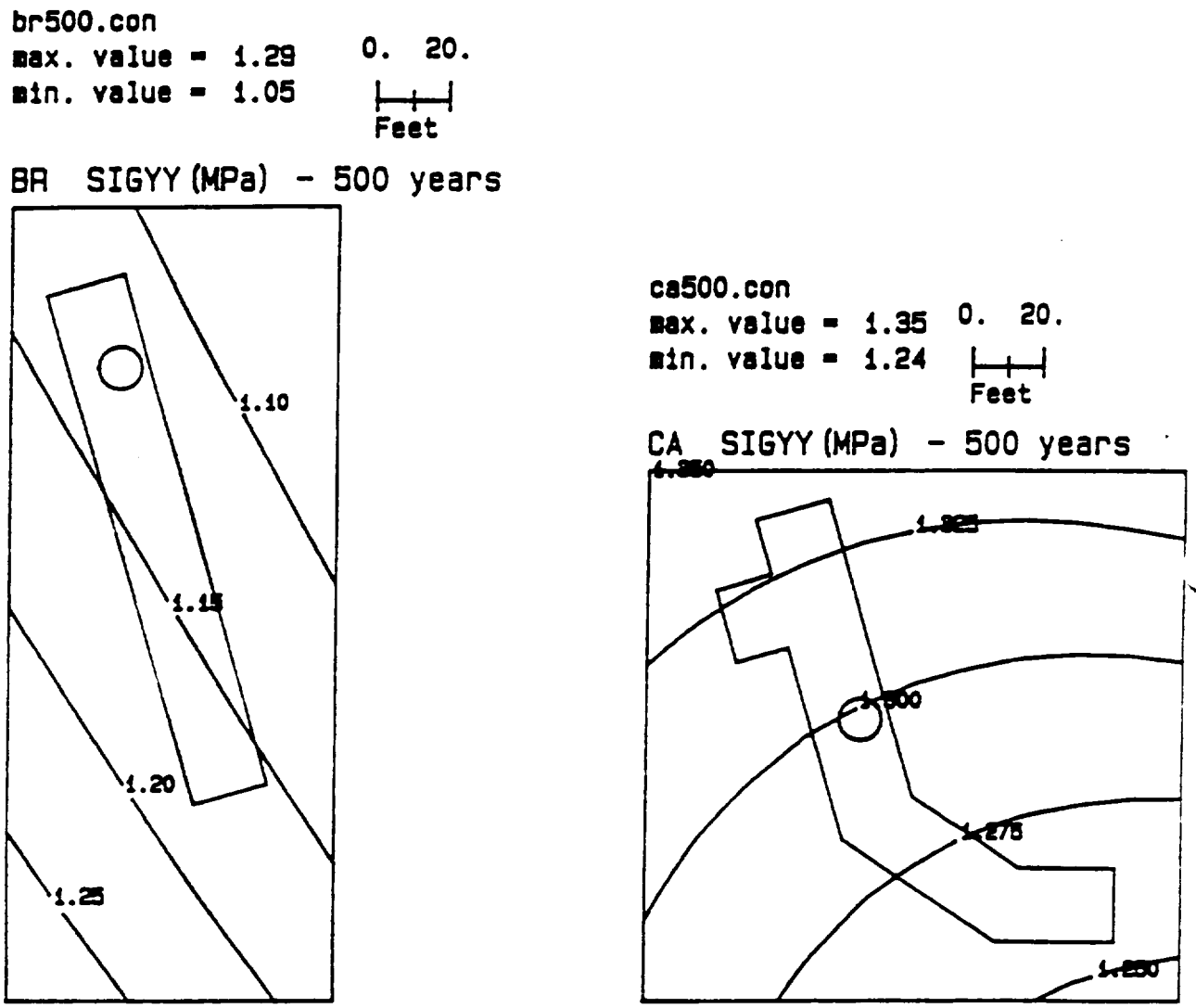

Figure C-26. Upper Demonstration Breakout Room (BR) and the Calico Hills Drill Room (CA): Changes in Normal Stress σ_{yy} at 500 Years After Waste Emplacement Begins

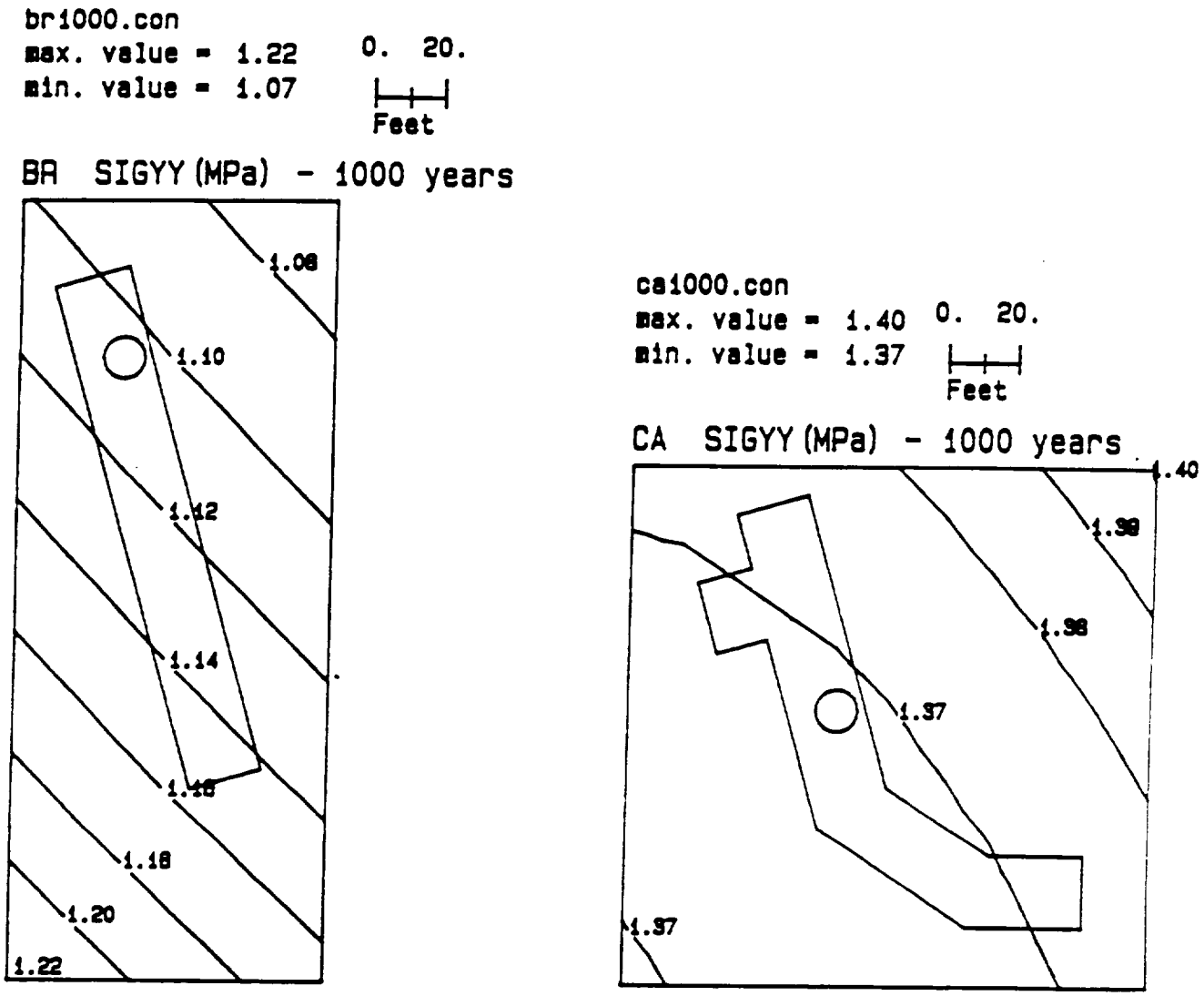

Figure C-27. Upper Demonstration Breakout Room (BR) and the Calico Hills Drill Room (CA): Changes in Normal Stress σ_{yy} at 1,000 Years After Waste Emplacement Begins

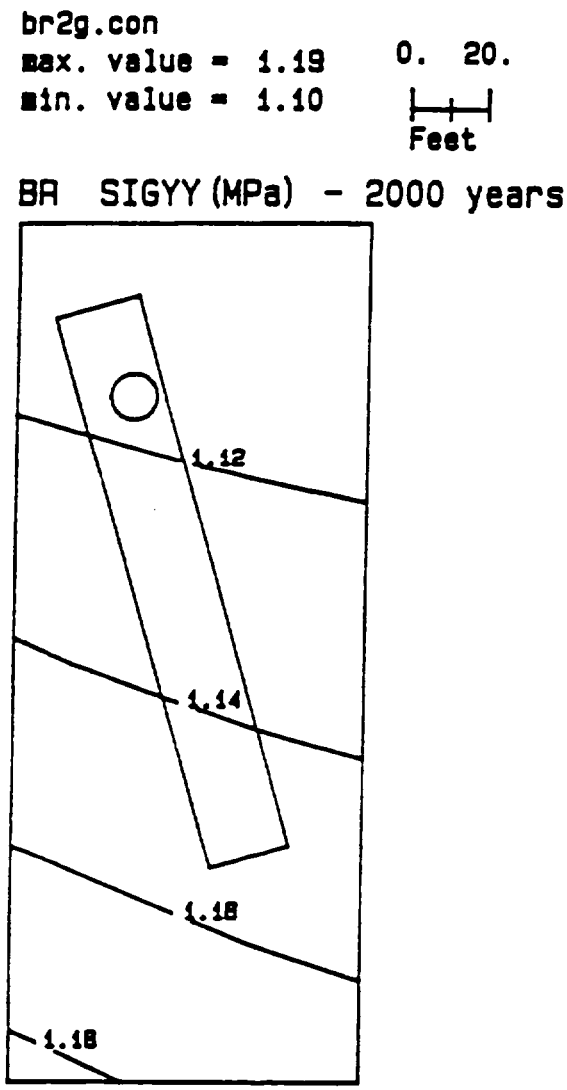

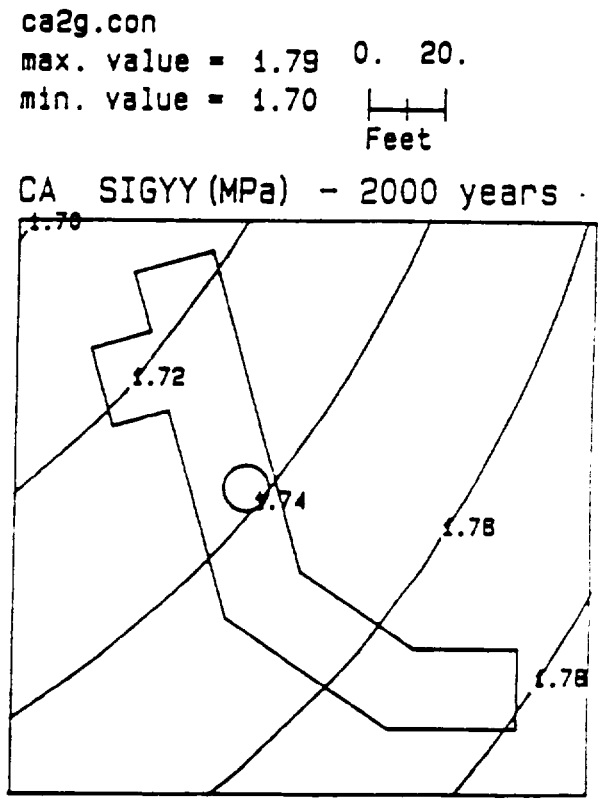

Figure C-28. Upper Demonstration Breakout Room (BR) and the Calico Hills Drill Room (CA): Changes in Normal Stress σ_{yy} at 2,000 Years After Waste Emplacement Begins

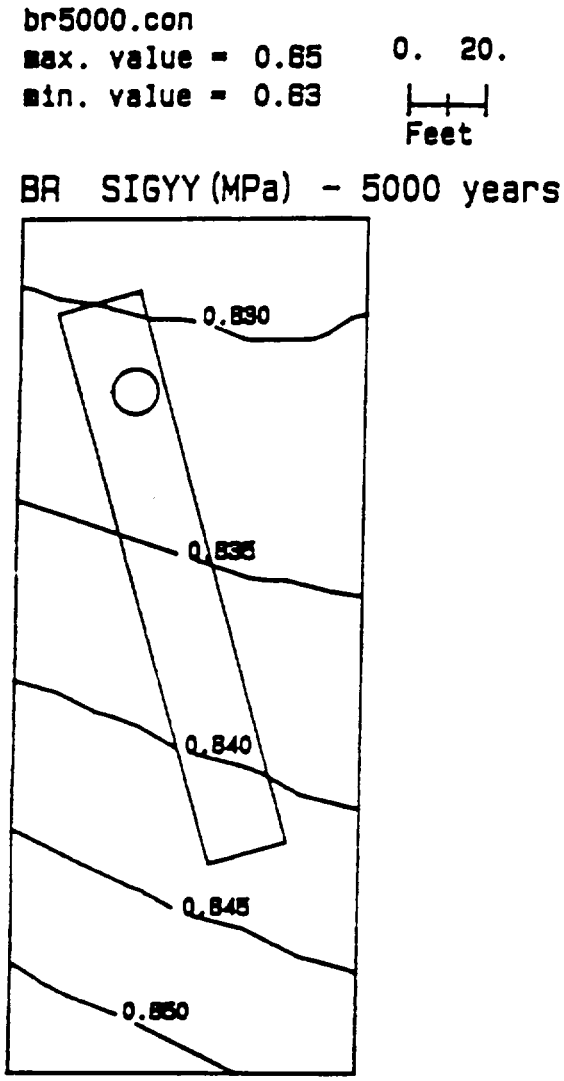

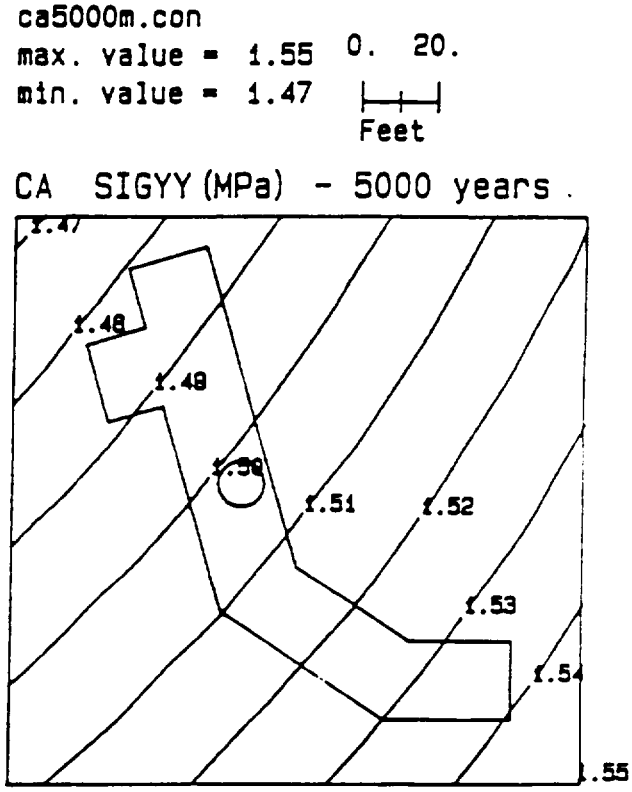

Figure C-29. Upper Demonstration Breakout Room (BR) and the Calico Hills Drill Room (CA): Changes in Normal Stress σ_{yy} at 5,000 Years After Waste Emplacement Begins

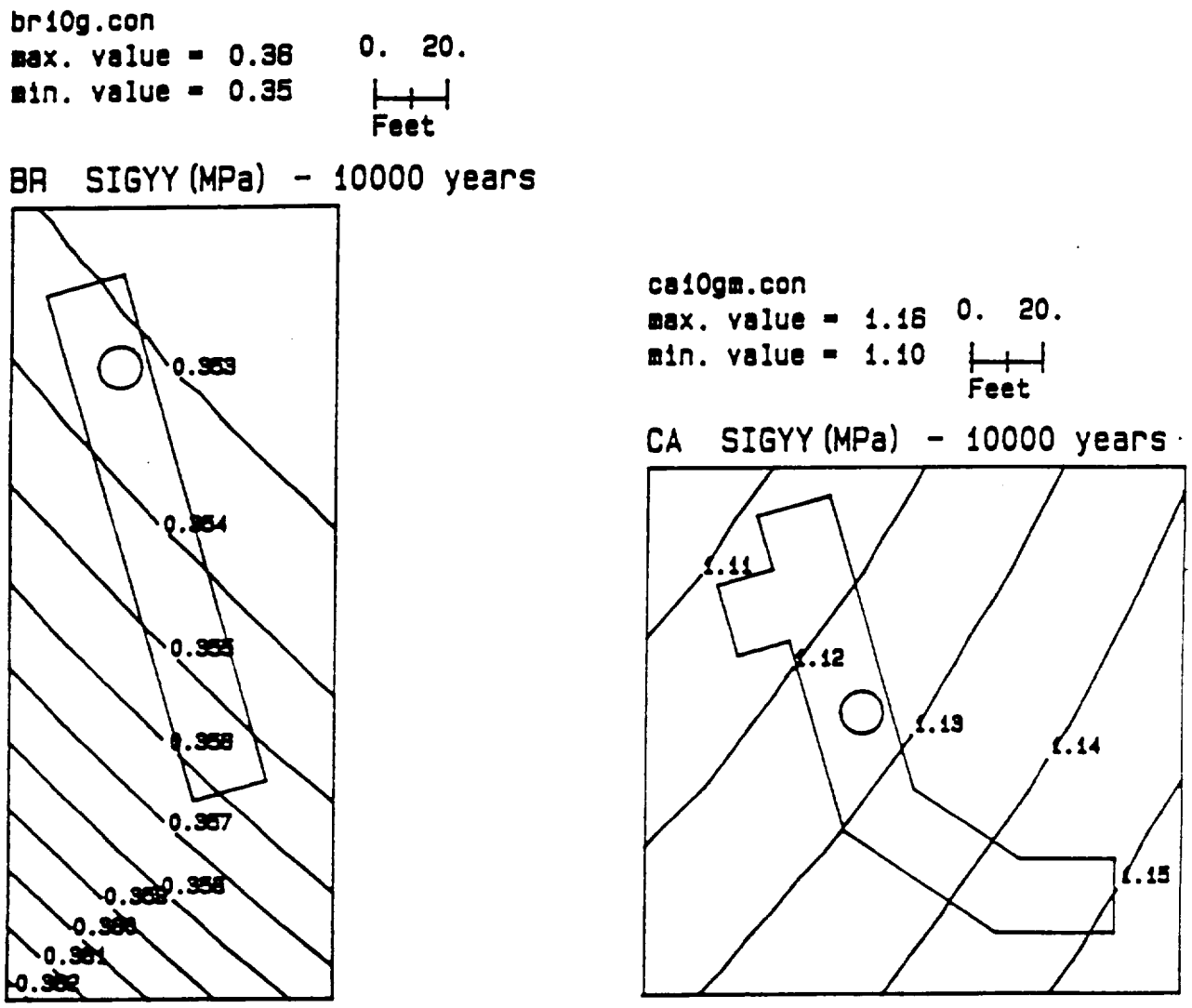

Figure C-30. Upper Demonstration Breakout Room (BR) and the Calico Hills Drill Room (CA): Changes in Normal Stress σ_{yy} at 10,000 Years After Waste Emplacement Begins

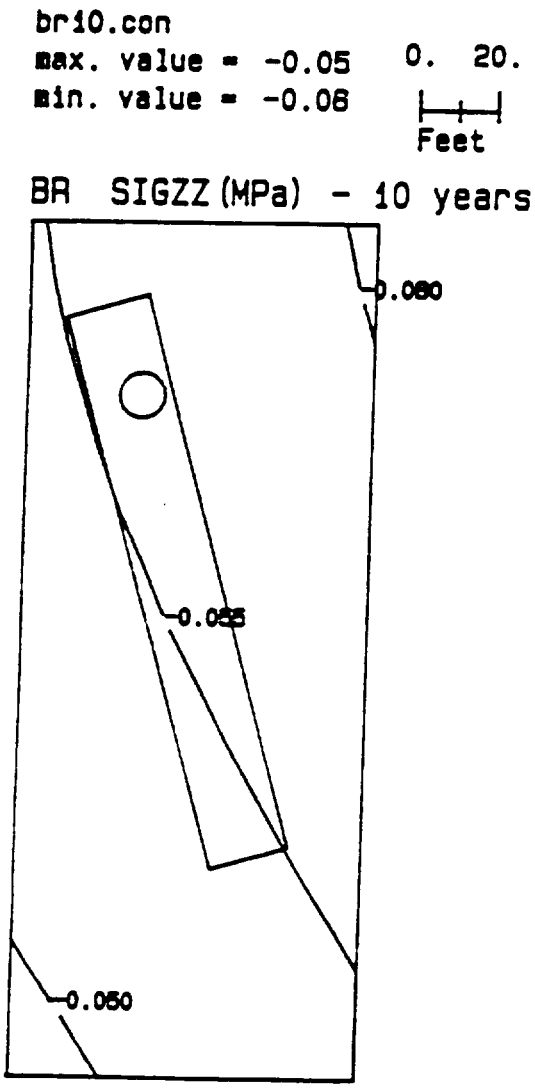

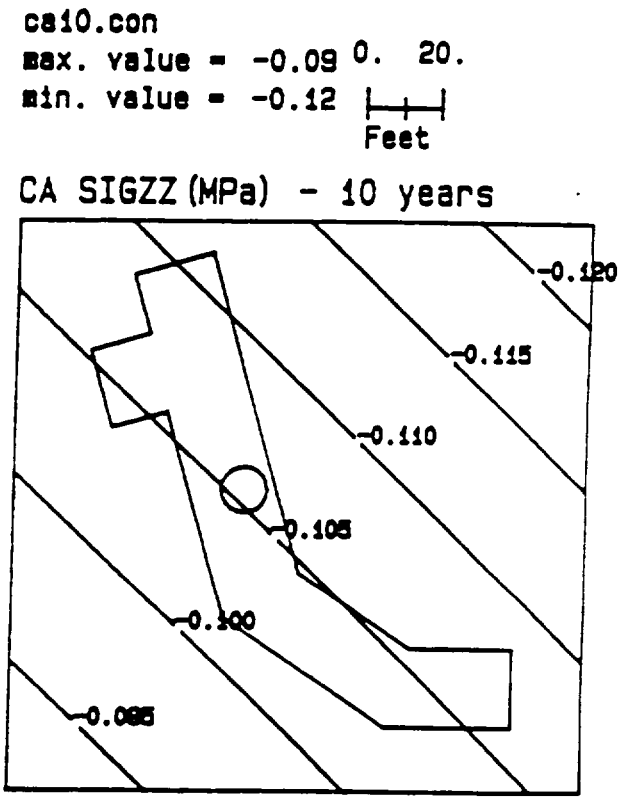

Figure C-31. Upper Demonstration Breakout Room (BR) and the Calico Hills Drill Room (CA): Changes in Normal Stress σ_{zz} at 10 Years After Waste Emplacement Begins

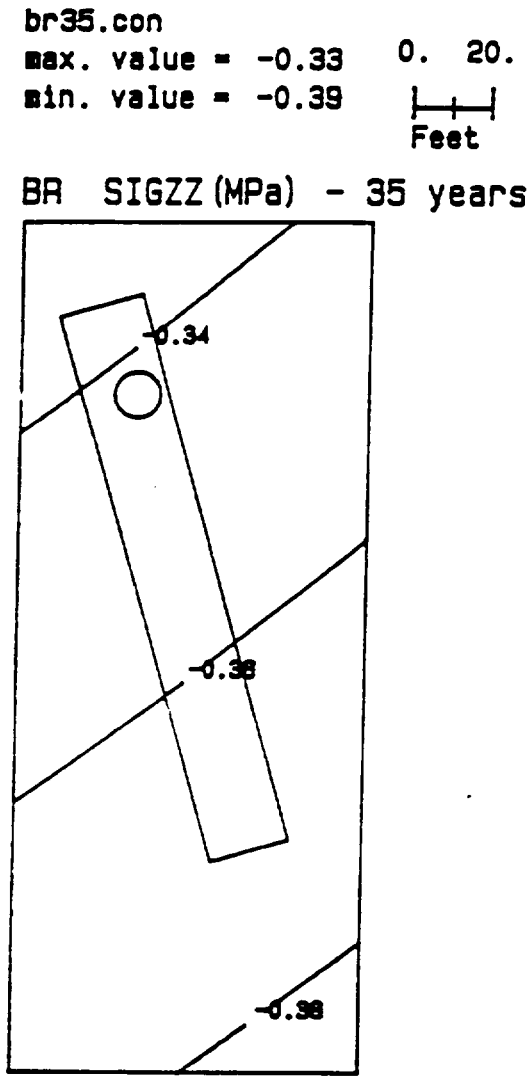

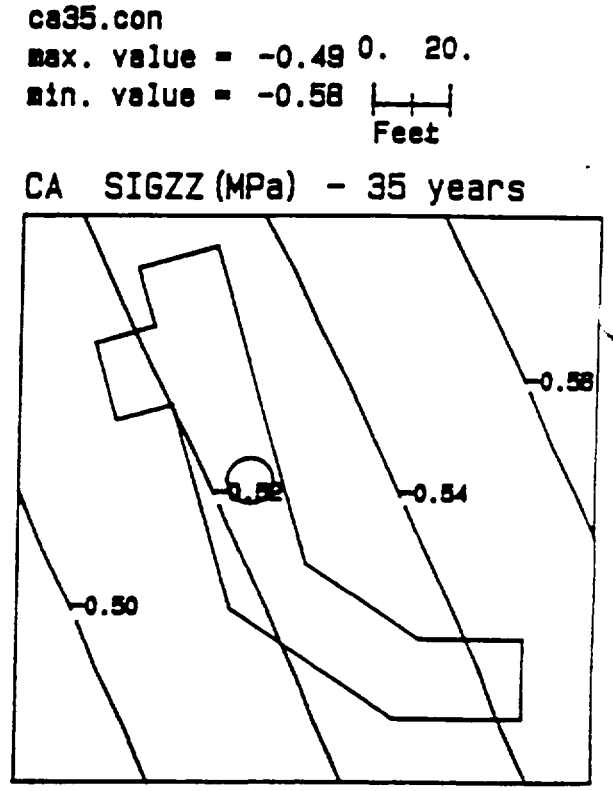

Figure C-32. Upper Demonstration Breakout Room (BR) and the Calico Hills Drill Room (CA): Changes in Normal Stress σ_{zz} at 35 Years After Waste Emplacement Begins

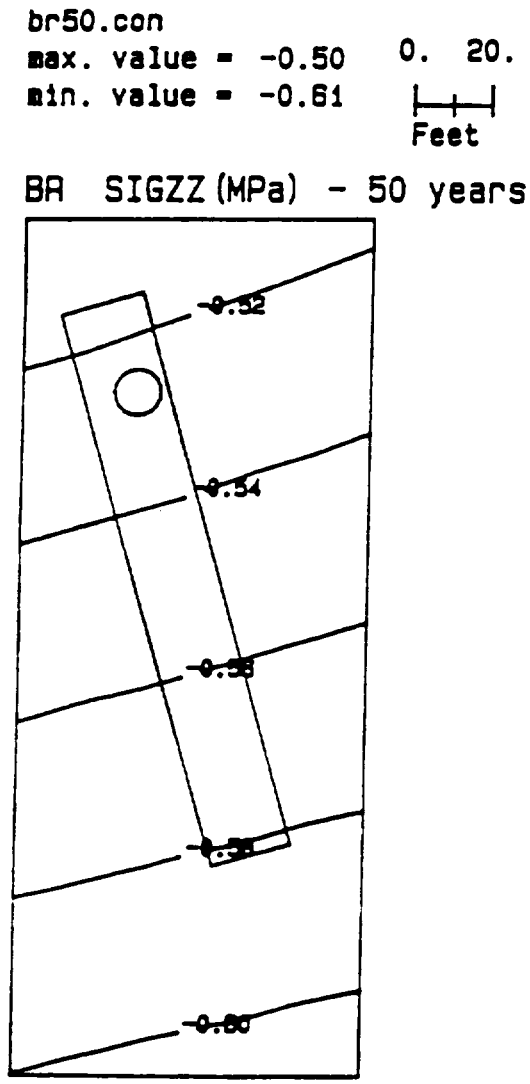

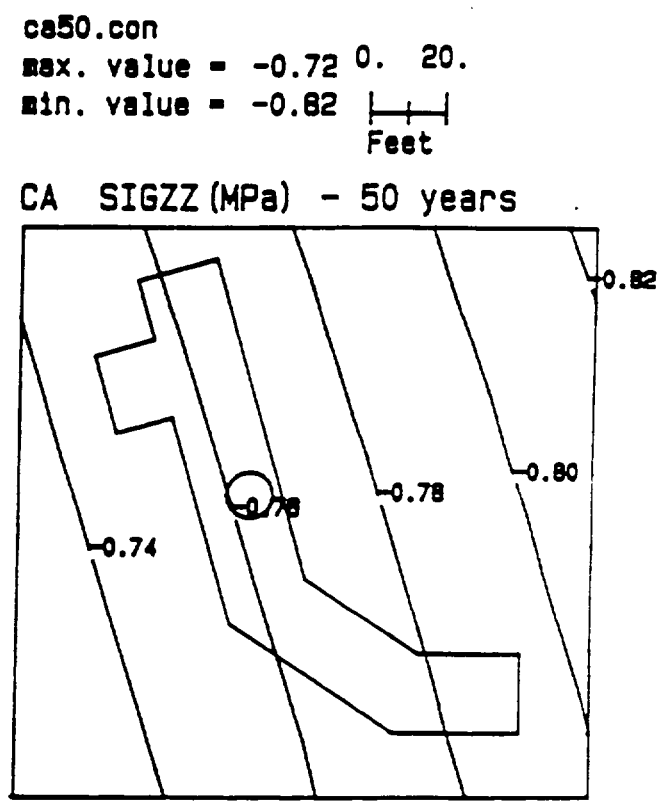

Figure C-33. Upper Demonstration Breakout Room (BR) and the Calico Hills Drill Room (CA): Changes in Normal Stress σ_{zz} at 50 Years After Waste Emplacement Begins

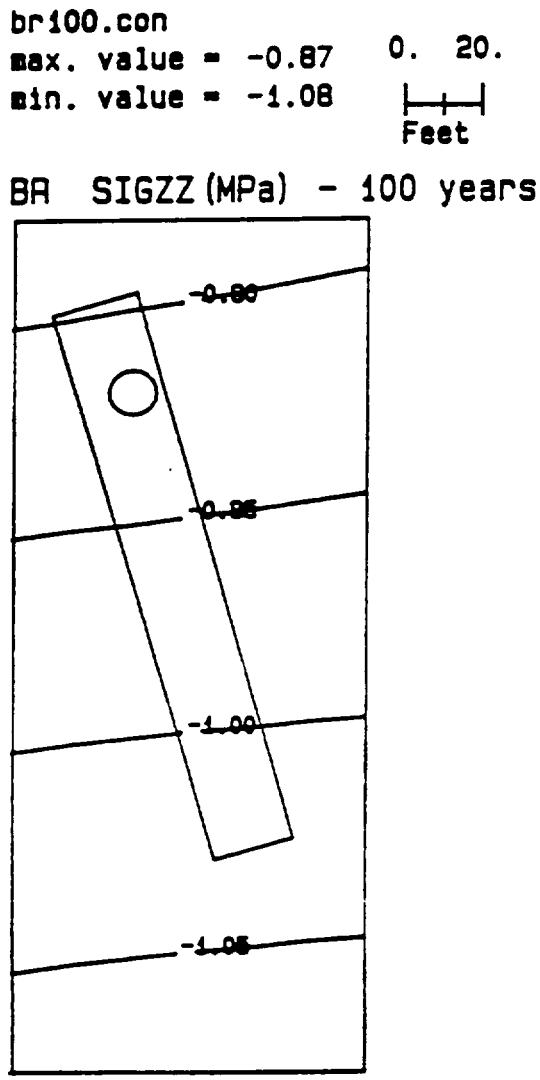

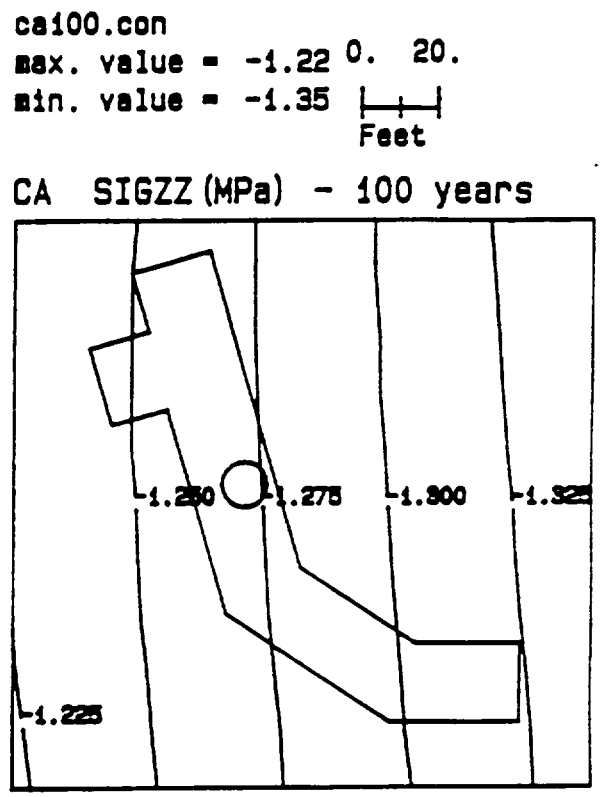

Figure C-34. Upper Demonstration Breakout Room (BR) and the Calico Hills Drill Room (CA): Changes in Normal Stress σ_{zz} at 100 Years After Waste Emplacement Begins

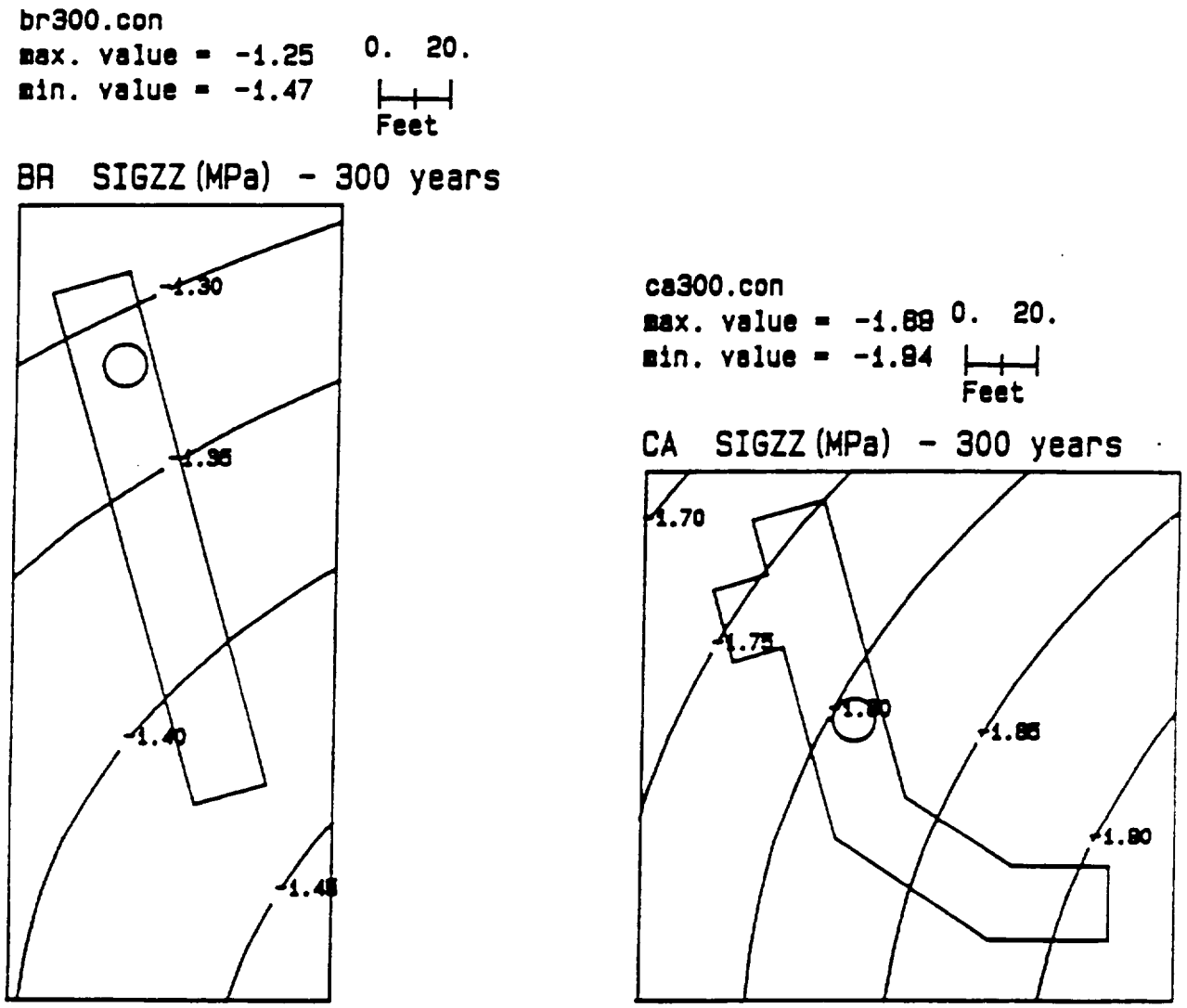

Figure C-35. Upper Demonstration Breakout Room (BR) and the Calico Hills Drill Room (CA): Changes in Normal Stress σ_{zz} at 300 Years After Waste Emplacement Begins

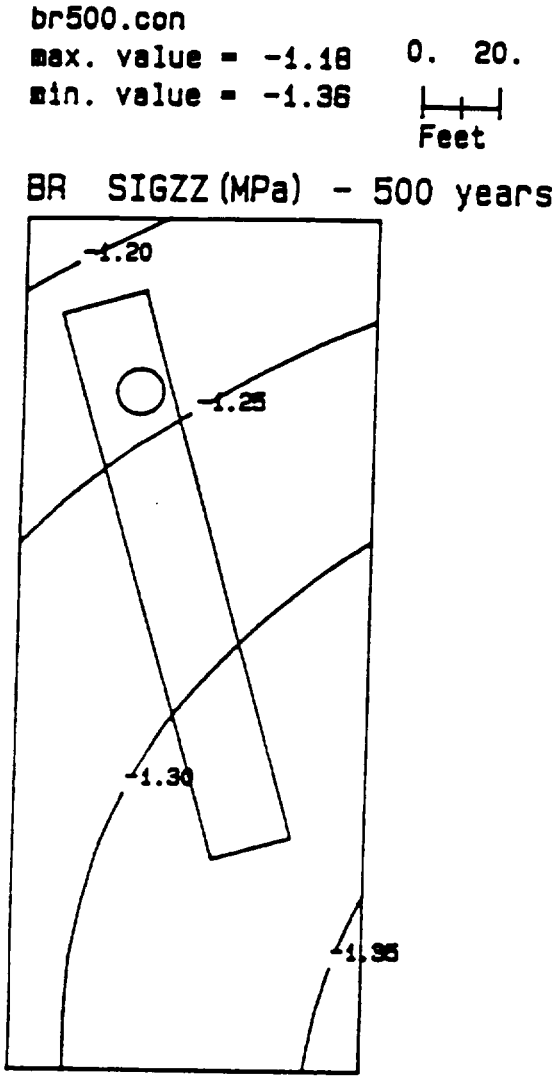

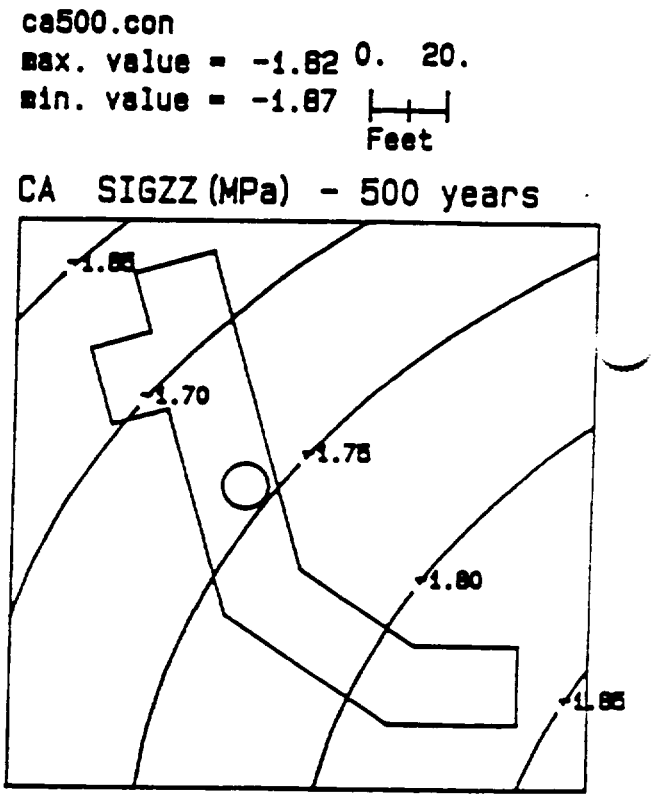

Figure C-36. Upper Demonstration Breakout Room (BR) and the Calico Hills Drill Room (CA): Changes in Normal Stress σ_{zz} at 500 Years After Waste Emplacement Begins

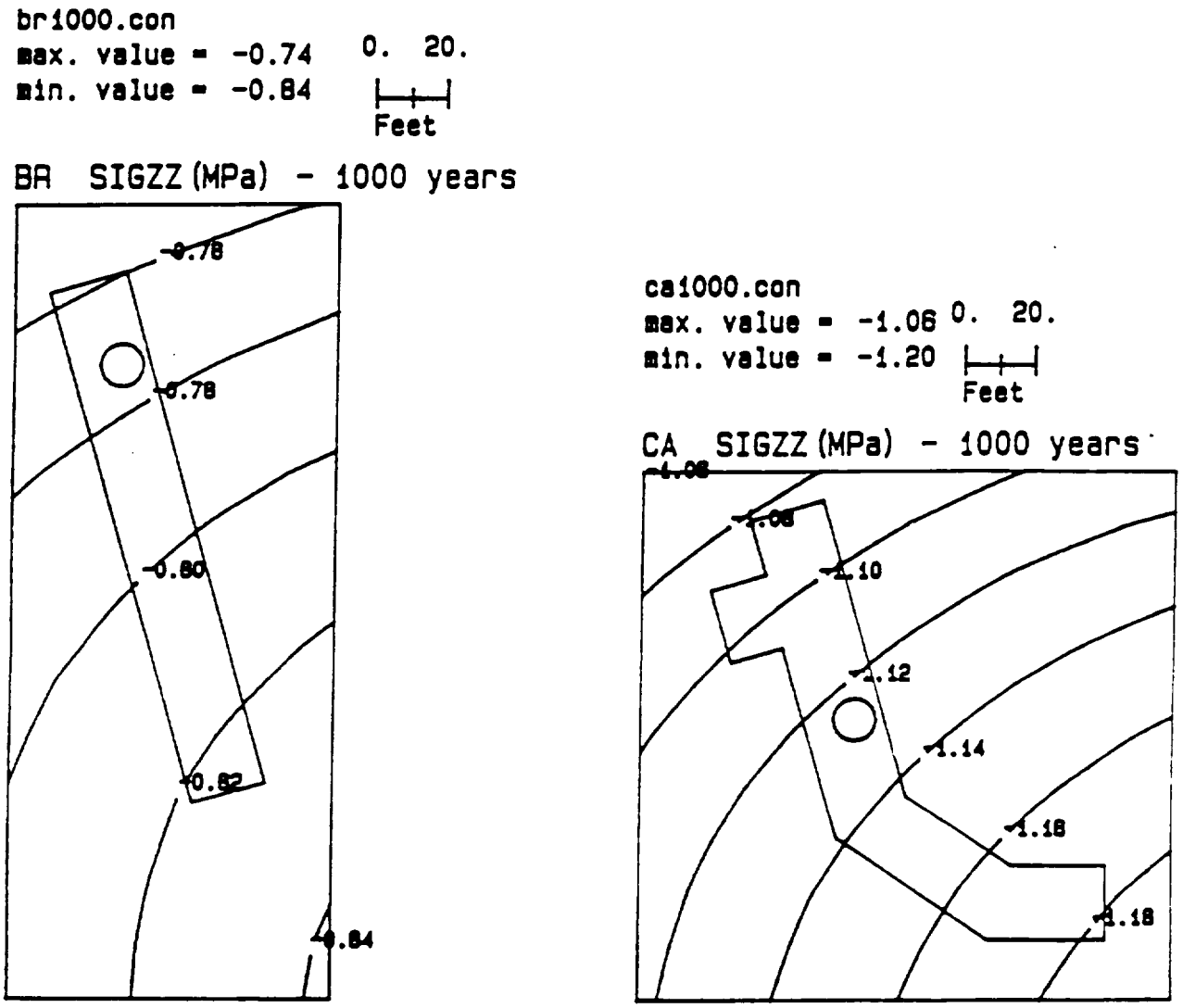

Figure C-37. Upper Demonstration Breakout Room (BR) and the Calico Hills Drill Room (CA): Changes in Normal Stress σ_{zz} at 1,000 Years After Waste Emplacement Begins

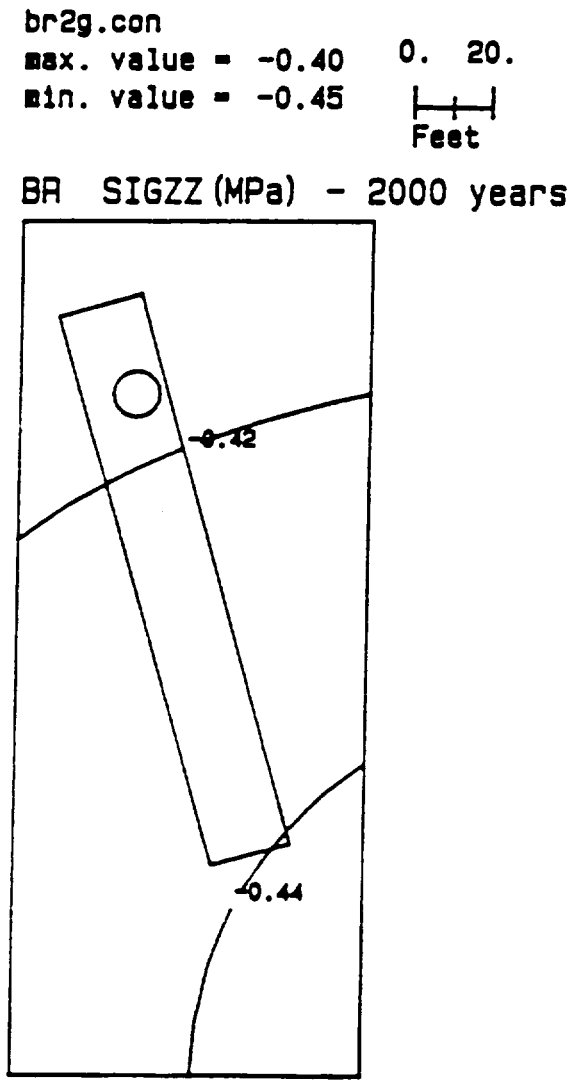

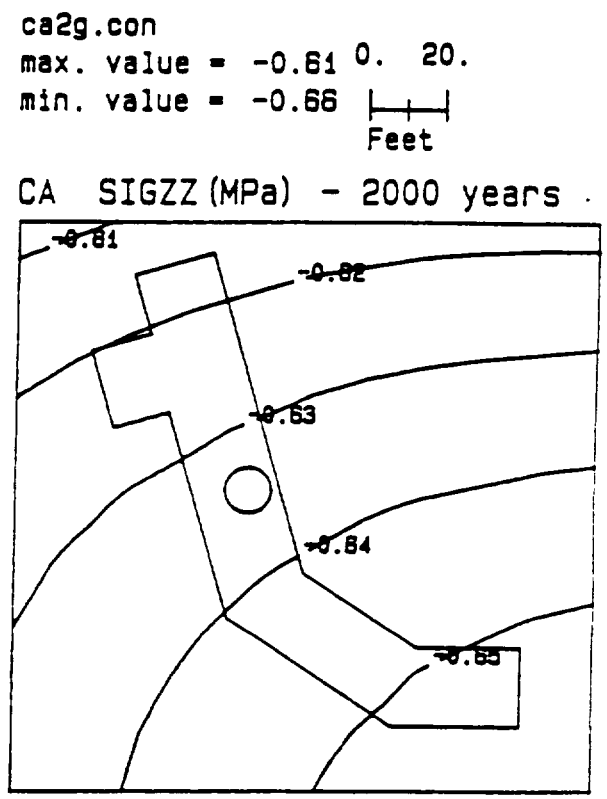

Figure C-38. Upper Demonstration Breakout Room (BR) and the Calico Hills Drill Room (CA): Changes in Normal Stress σ_{zz} at 2,000 Years After Waste Emplacement Begins

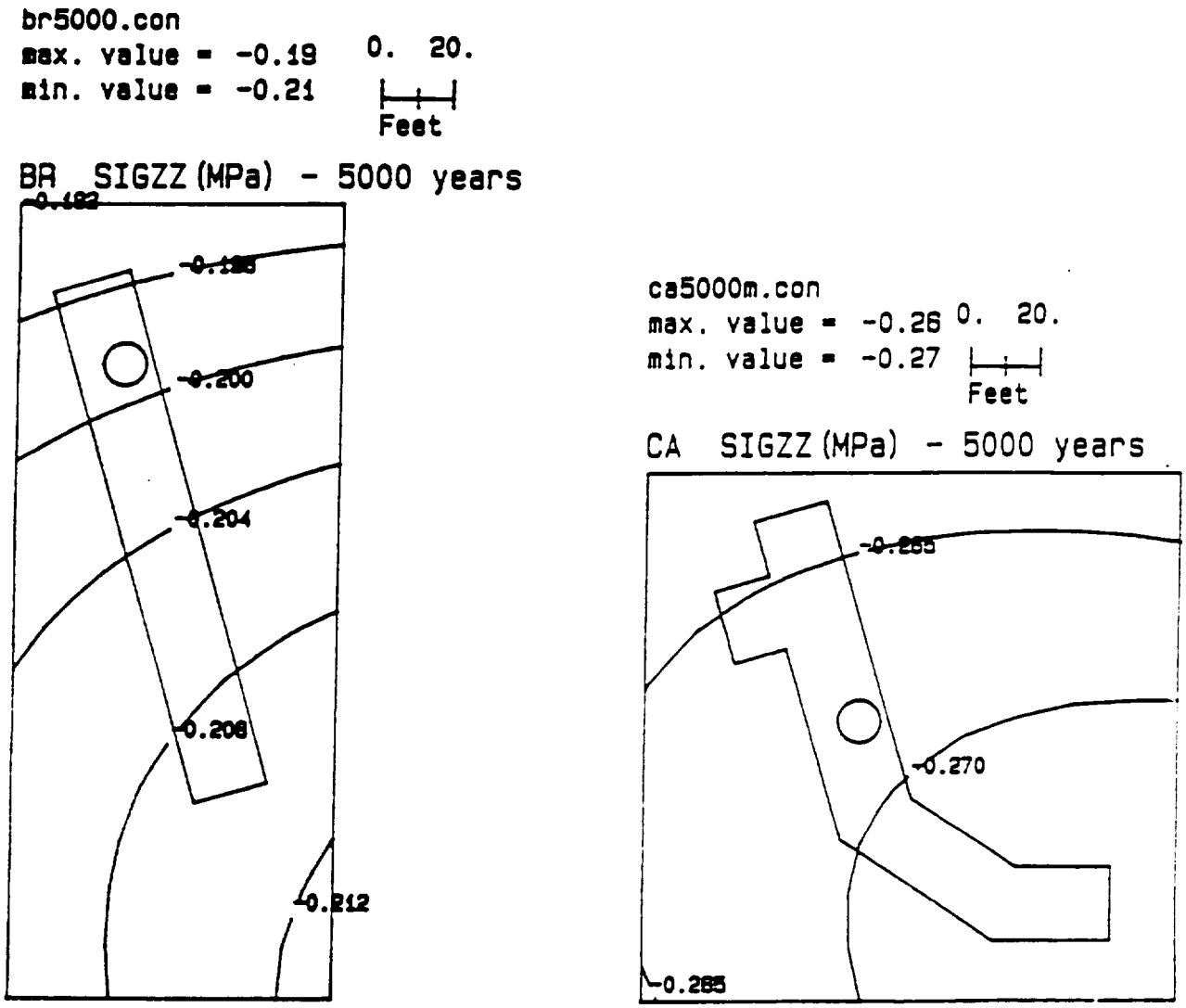

Figure C-39. Upper Demonstration Breakout Room (BR) and the Calico Hills Drill Room (CA): Changes in Normal Stress σ_{zz} at 5,000 Years After Waste Emplacement Begins

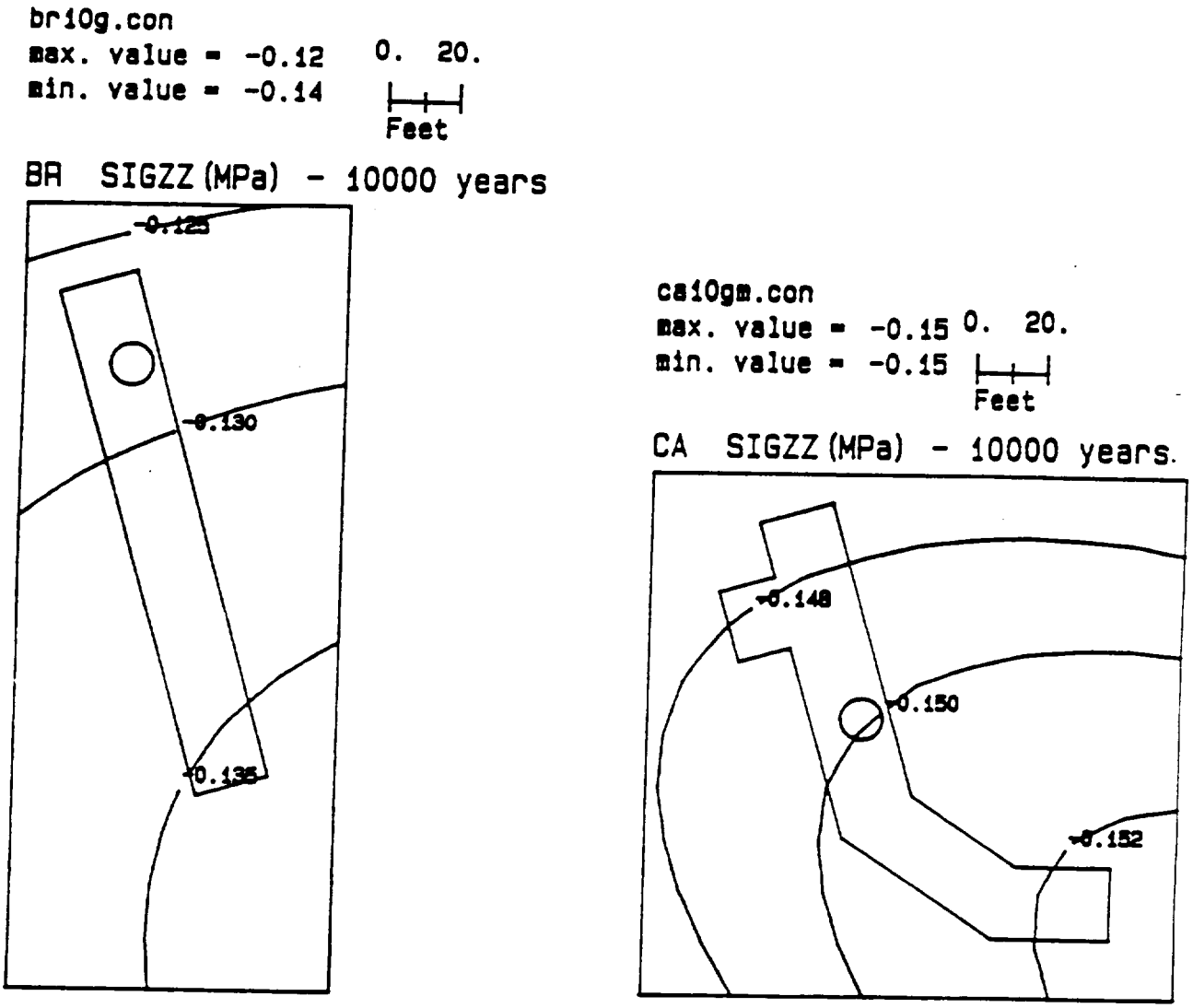

Figure C-40. Upper Demonstration Breakout Room (BR) and the Calico Hills Drill Room (CA): Changes in Normal Stress σ_{zz} at 10,000 Years After Waste Emplacement Begins

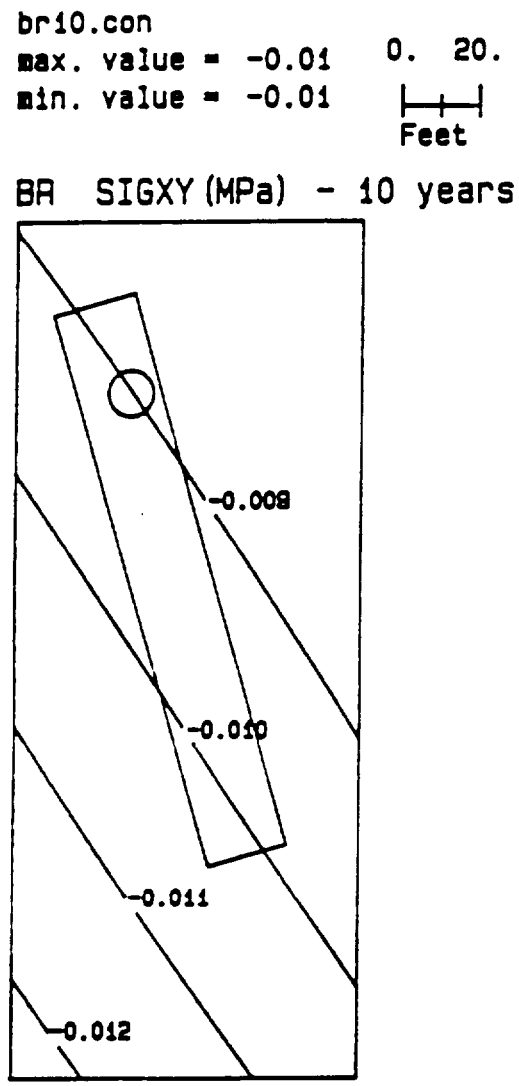

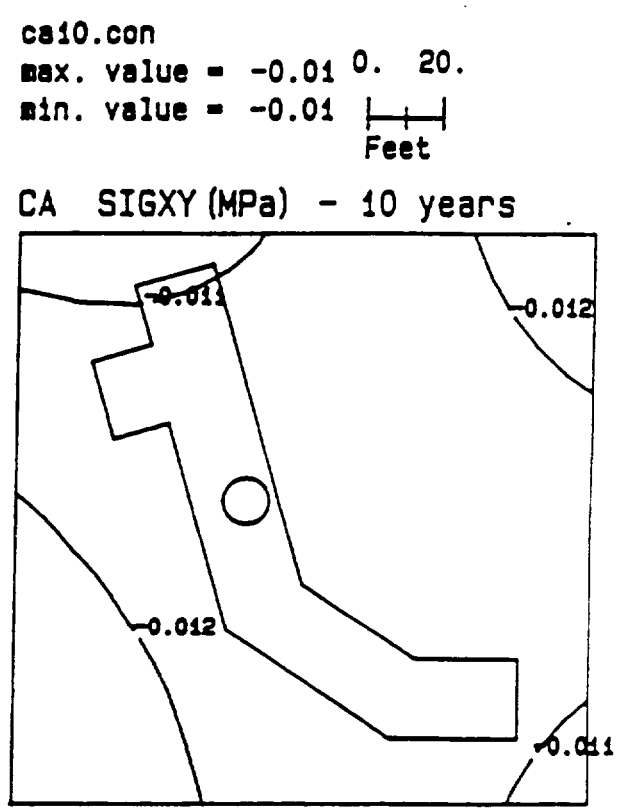

Figure C-41. Upper Demonstration Breakout Room (BR) and the Calico Hills Drill Room (CA): Changes in Shear Stress σ_{xy} at 10 Years After Waste Emplacement Begins

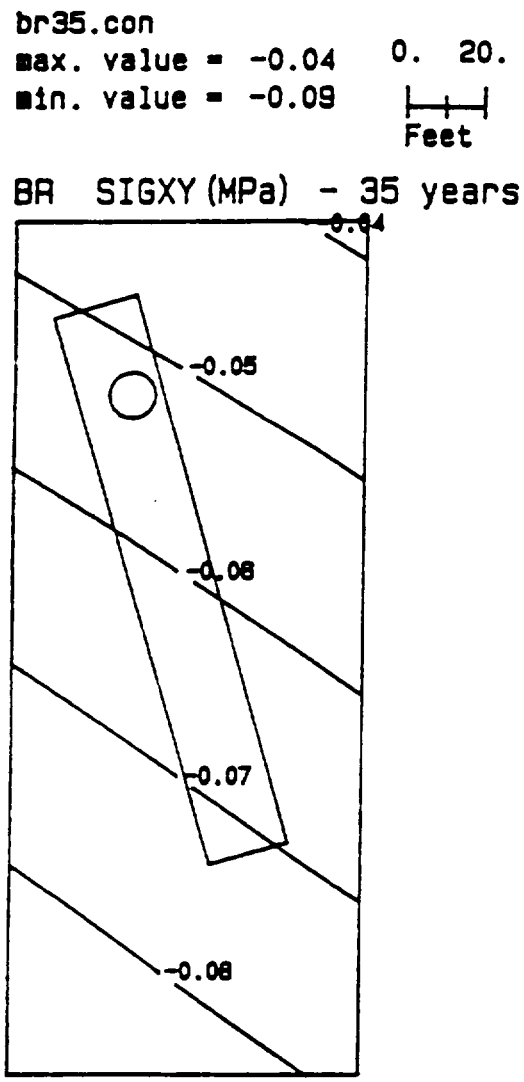

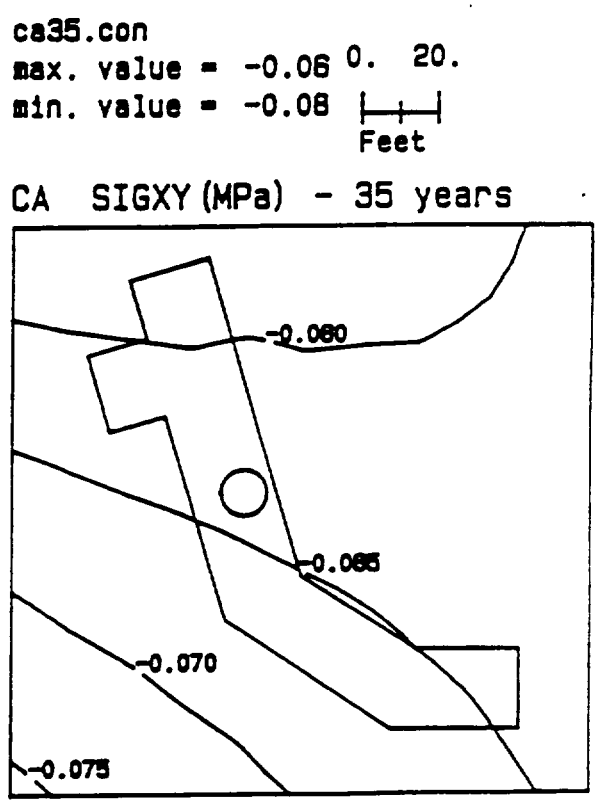

Figure C-42. Upper Demonstration Breakout Room (BR) and the Calico Hills Drill Room (CA): Changes in Shear Stress σ_{xy} at 35 Years After Waste Emplacement Begins

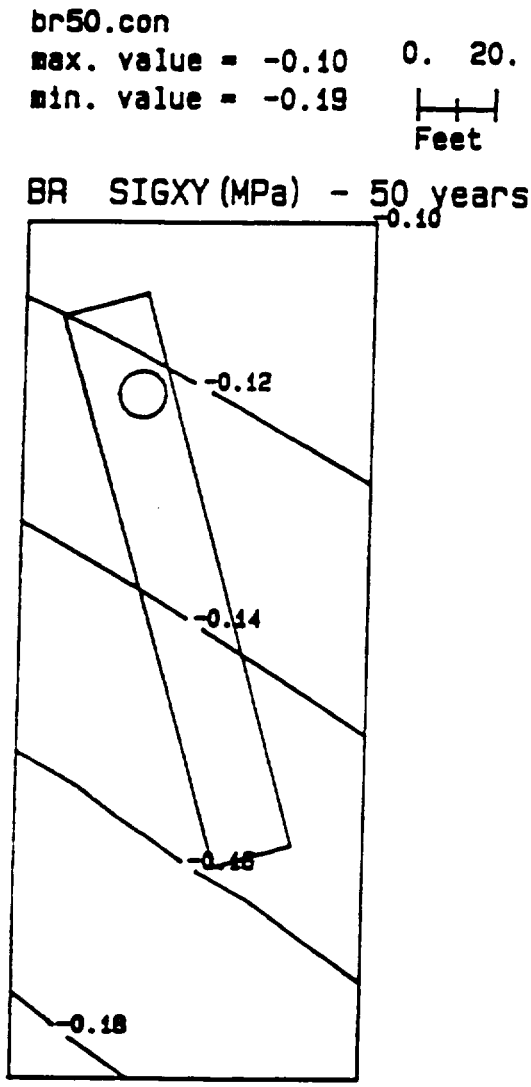

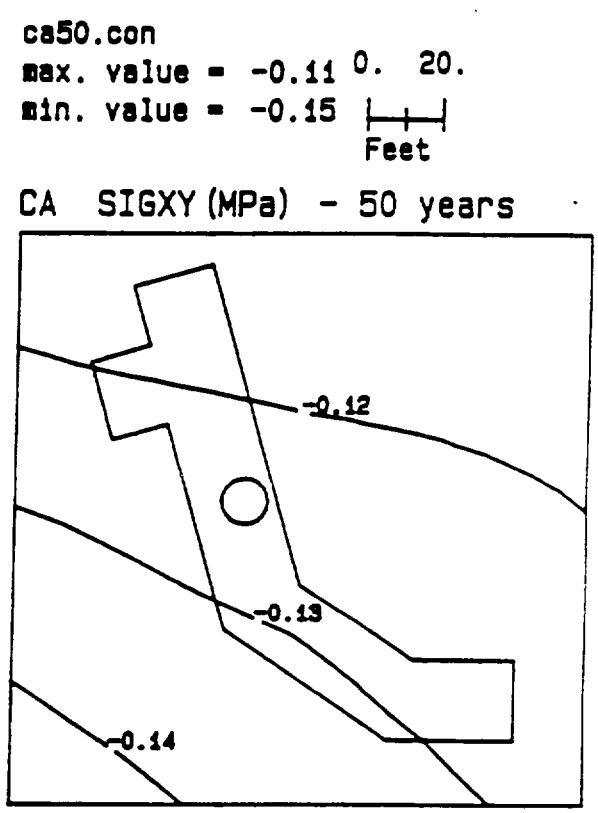

Figure C-43. Upper Demonstration Breakout Room (BR) and the Calico Hills Drill Room (CA): Changes in Shear Stress σ_{xy} at 50 Years After Waste Emplacement Begins

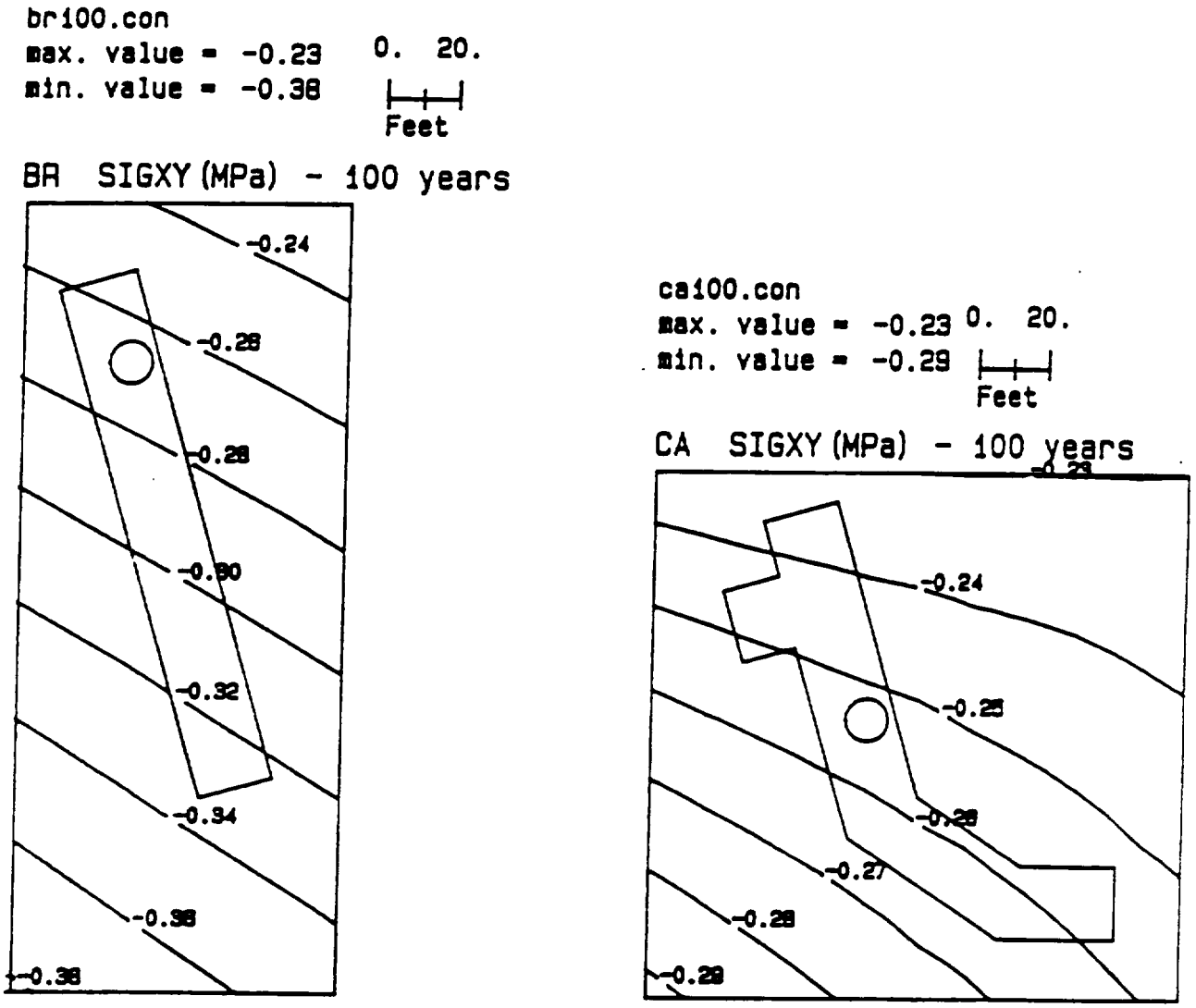

Figure C-44. Upper Demonstration Breakout Room (BR) and the Calico Hills Drill Room (CA): Changes in Shear Stress σ_{xy} at 100 Years After Waste Emplacement Begins

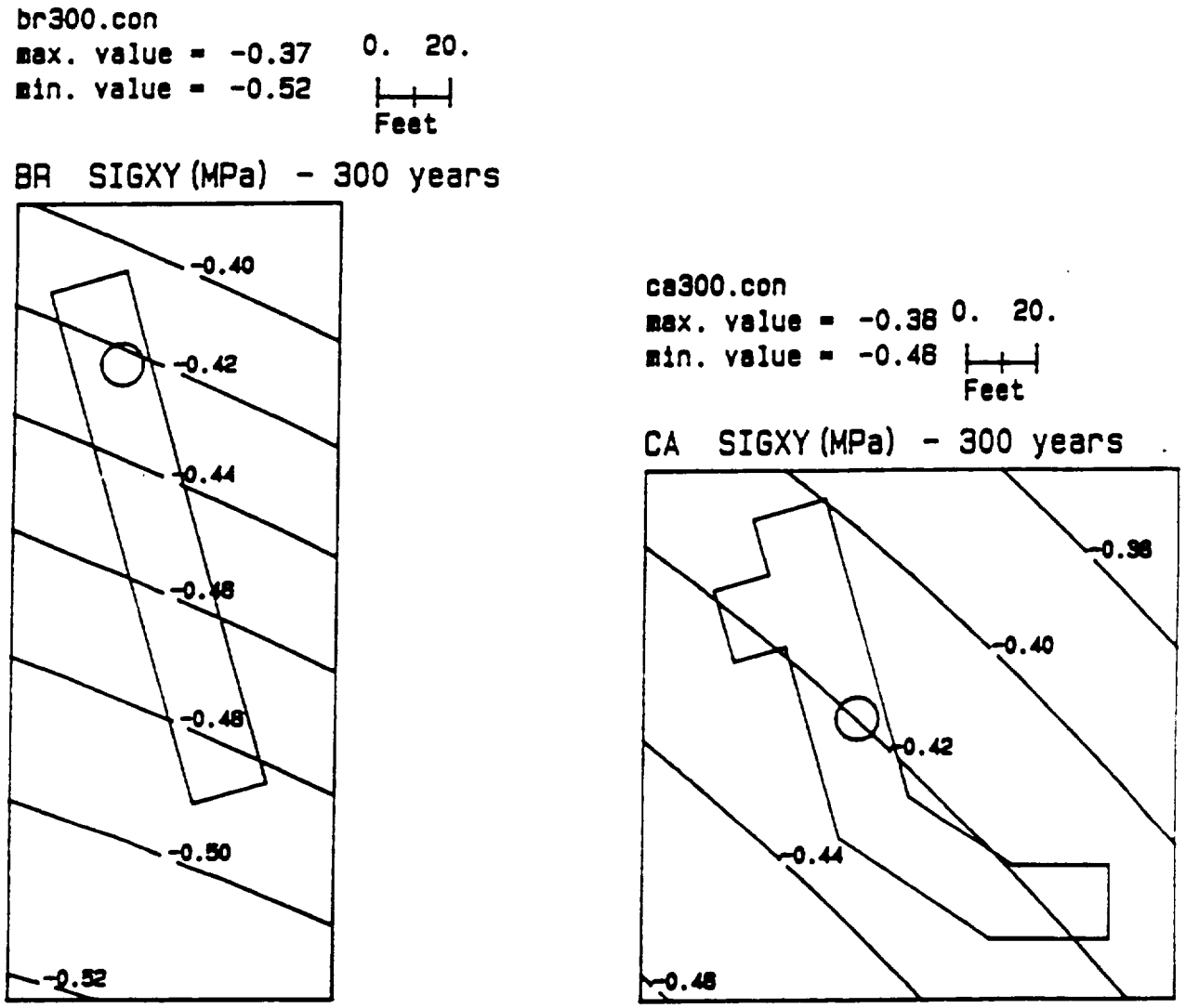

Figure C-45. Upper Demonstration Breakout Room (BR) and the Calico Hills Drill Room (CA): Changes in Shear Stress σ_{xy} at 300 Years After Waste Emplacement Begins

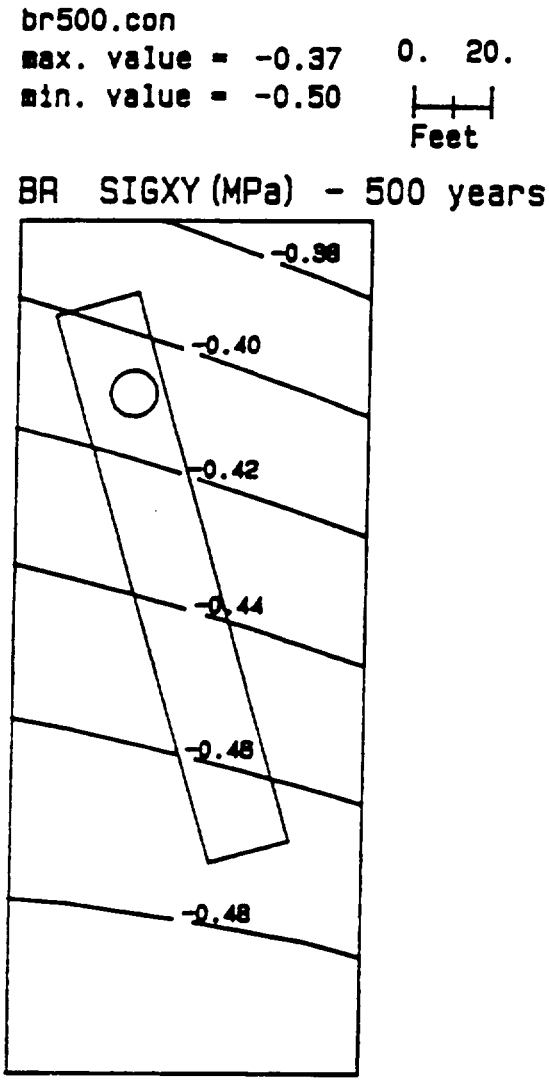

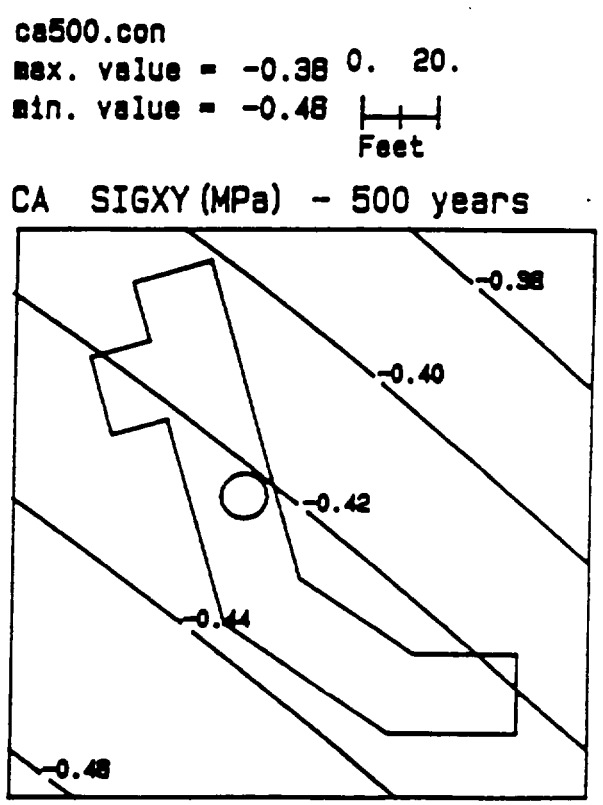

Figure C-46. Upper Demonstration Breakout Room (BR) and the Calico Hills Drill Room (CA): Changes in Shear Stress σ_{xy} at 500 Years After Waste Emplacement Begins

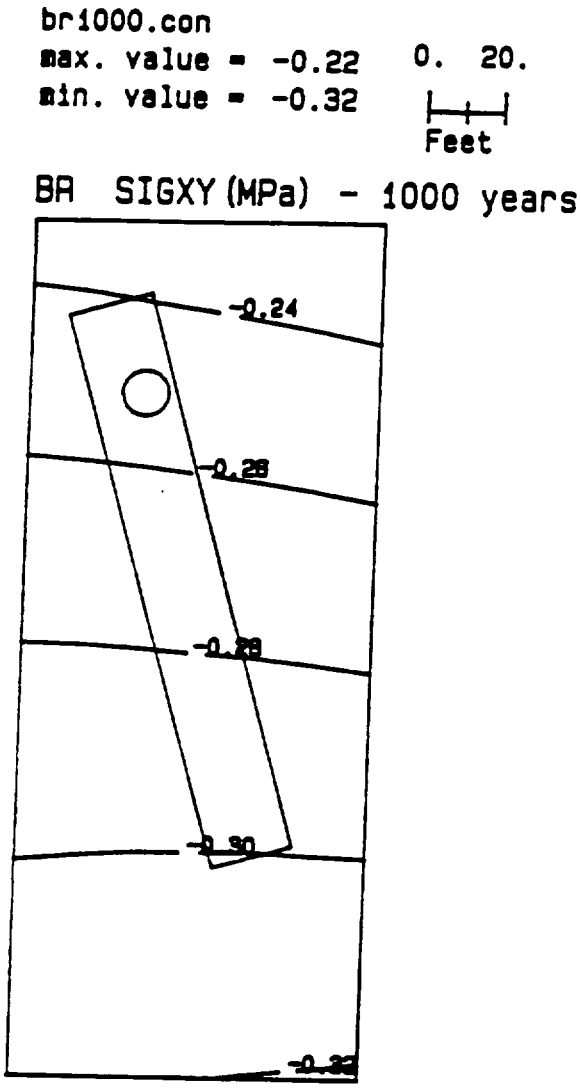

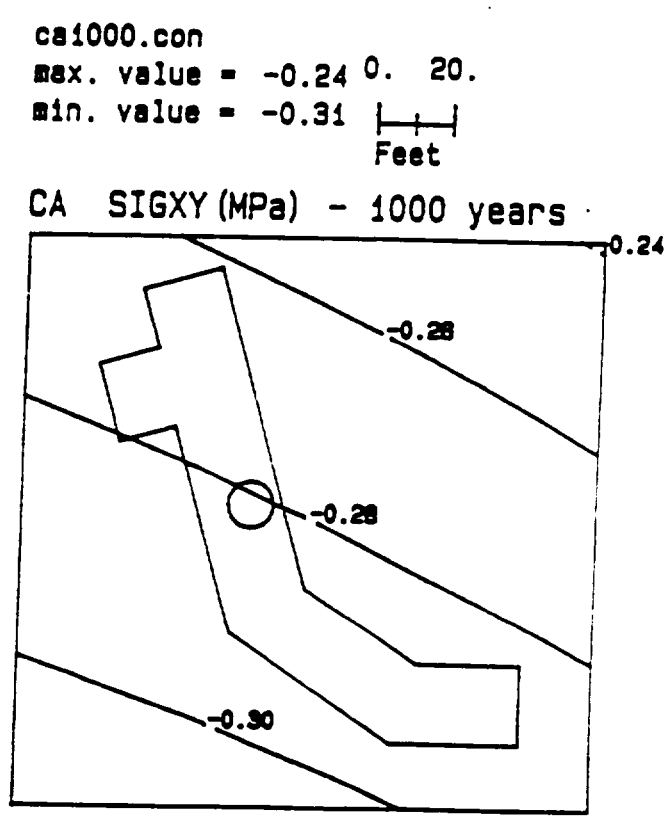

Figure C-47. Upper Demonstration Breakout Room (BR) and the Calico Hills Drill Room (CA): Changes in Shear Stress σ_{xy} at 1,000 Years After Waste Emplacement Begins

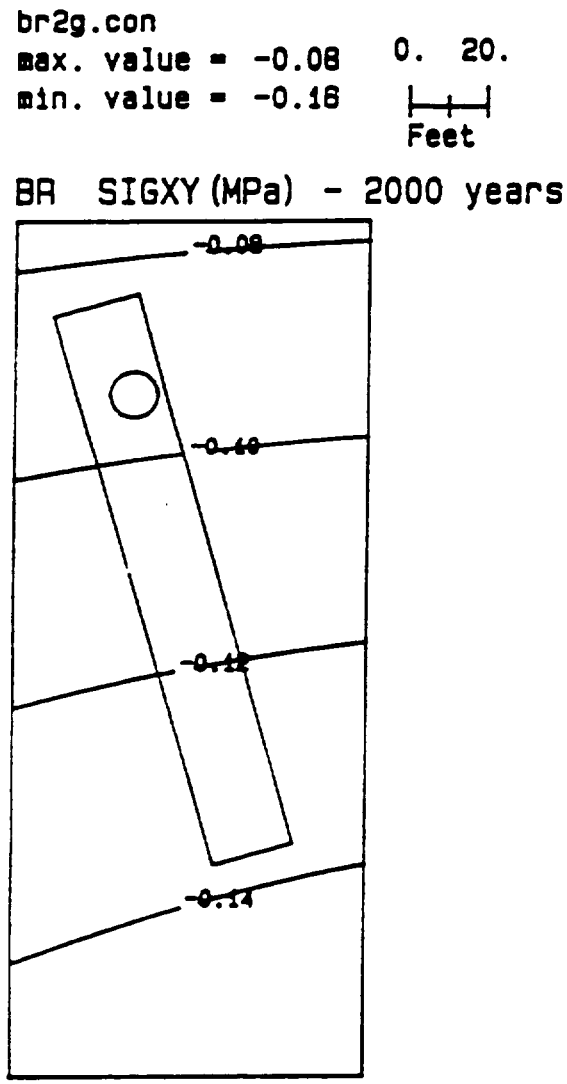

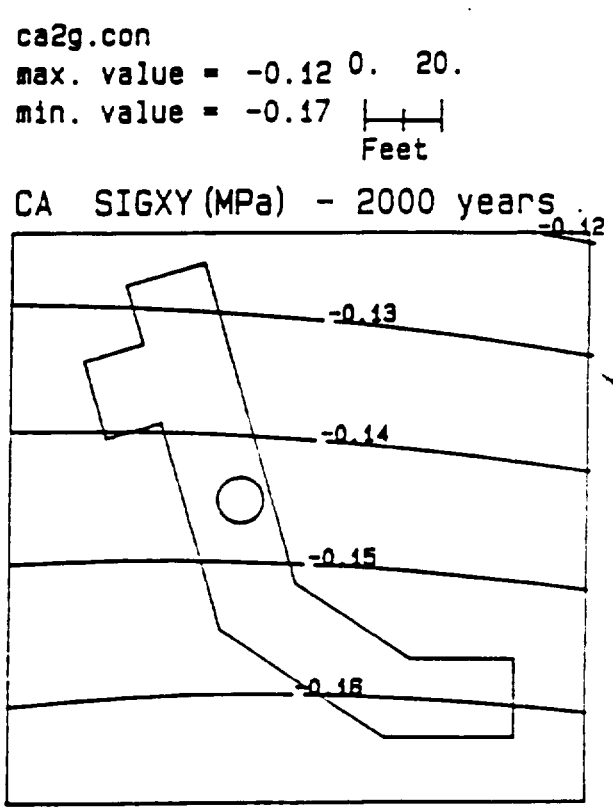

Figure C-48. Upper Demonstration Breakout Room (BR) and the Calico Hills Drill Room (CA): Changes in Shear Stress σ_{xy} at 2,000 Years After Waste Emplacement Begins

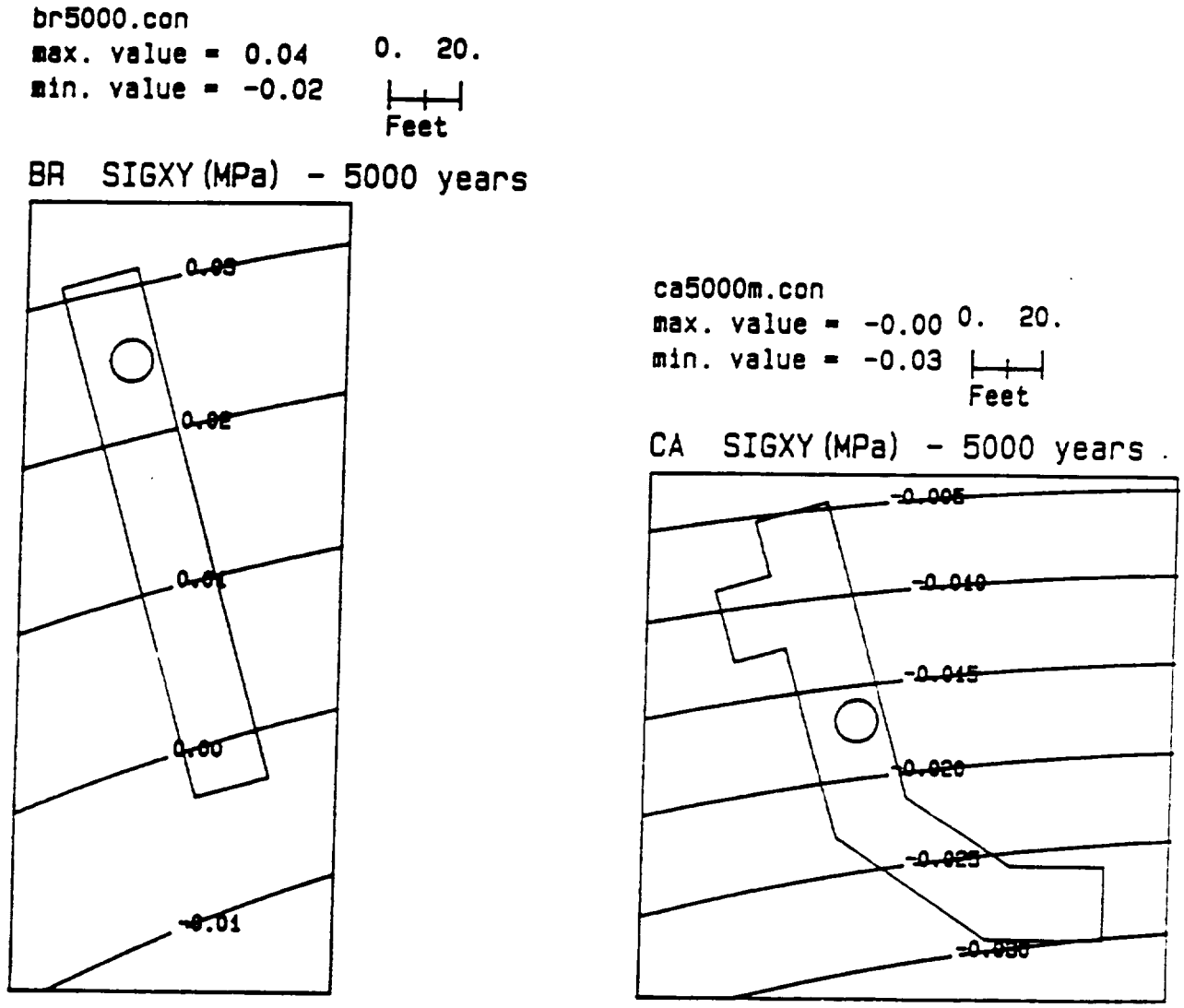

Figure C-49. Upper Demonstration Breakout Room (BR) and the Calico Hills Drill Room (CA): Changes in Shear Stress σ_{xy} at 5,000 Years After Waste Emplacement Begins

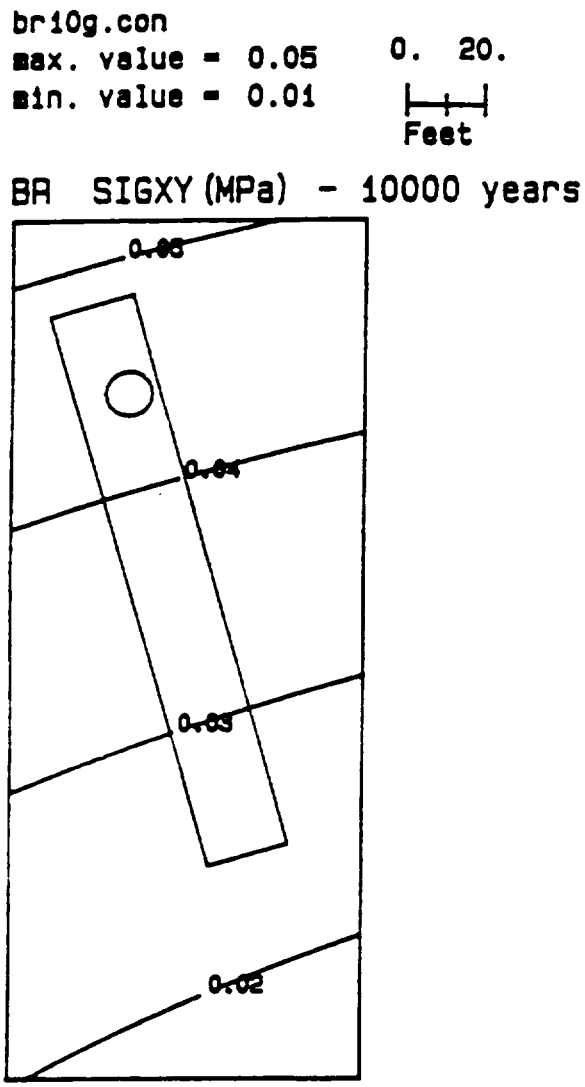

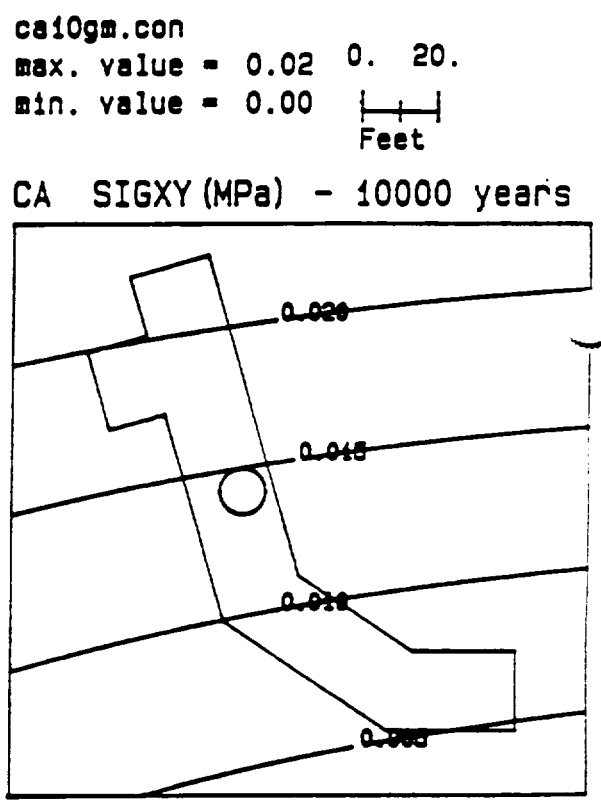

Figure C-50. Upper Demonstration Breakout Room (BR) and the Calico Hills Drill Room (CA): Changes in Shear Stress σ_{xy} at 10,000 Years After Waste Emplacement Begins

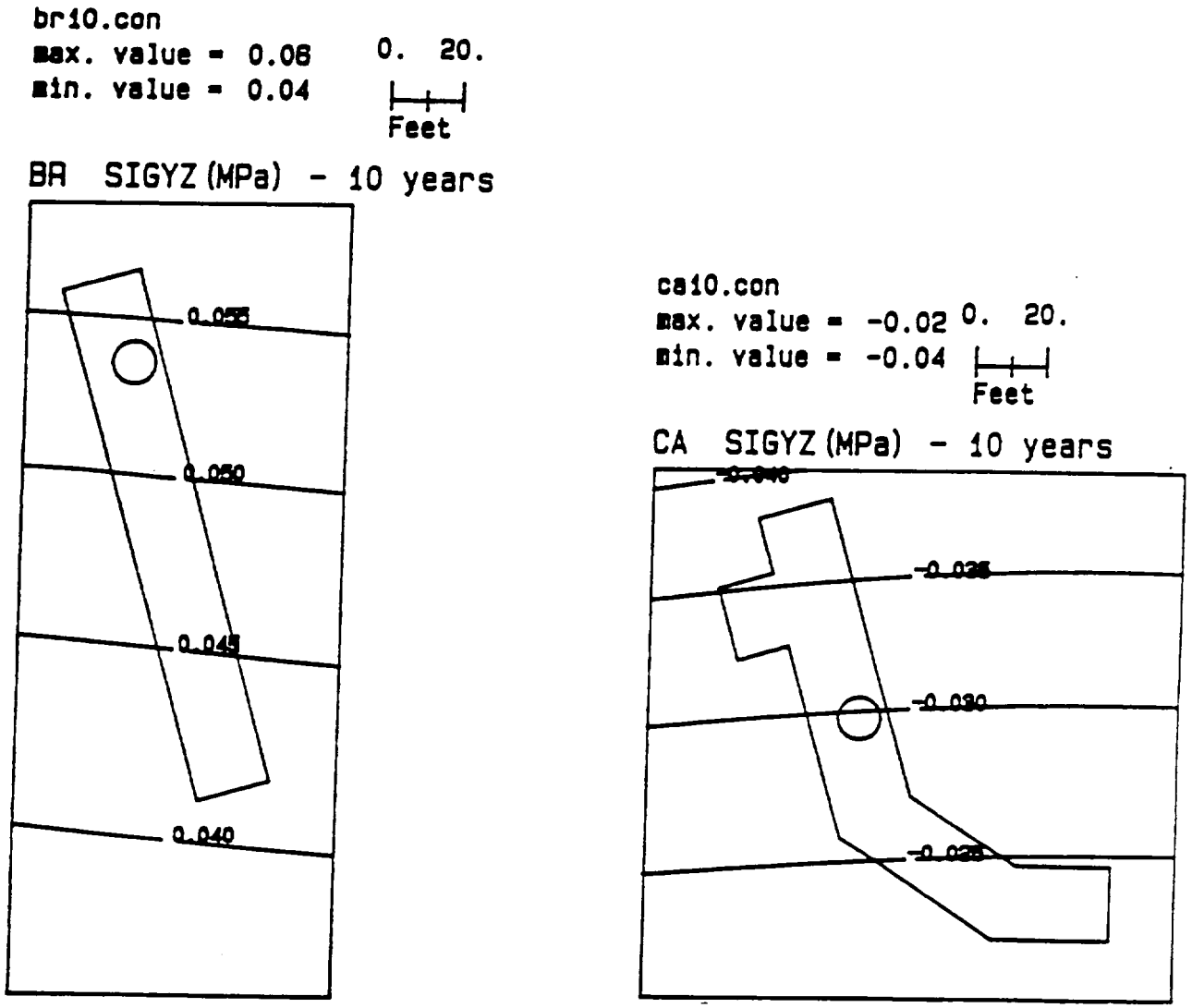

Figure C-51. Upper Demonstration Breakout Room (BR) and the Calico Hills Drill Room (CA): Changes in Shear Stress σ_{yz} at 10 Years After Waste Emplacement Begins

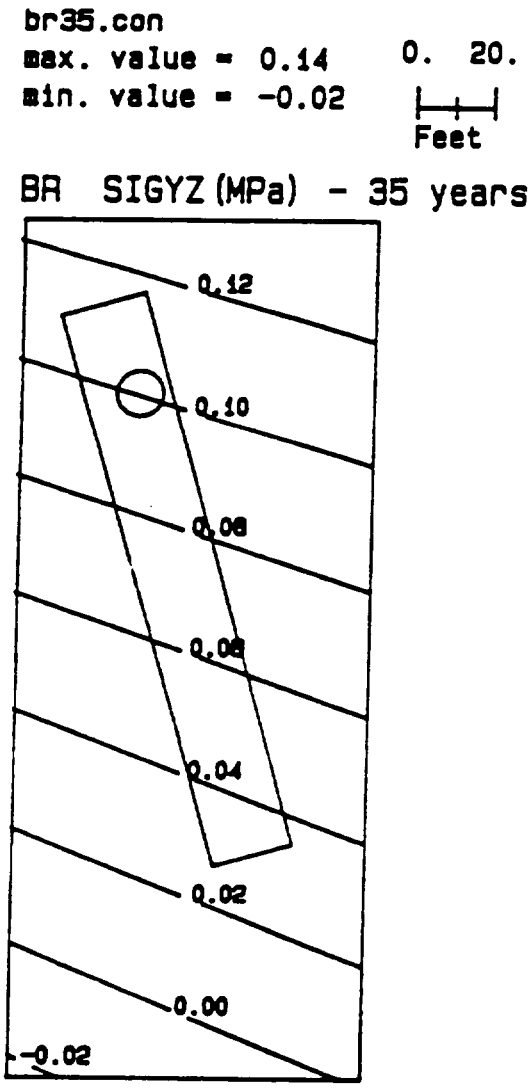

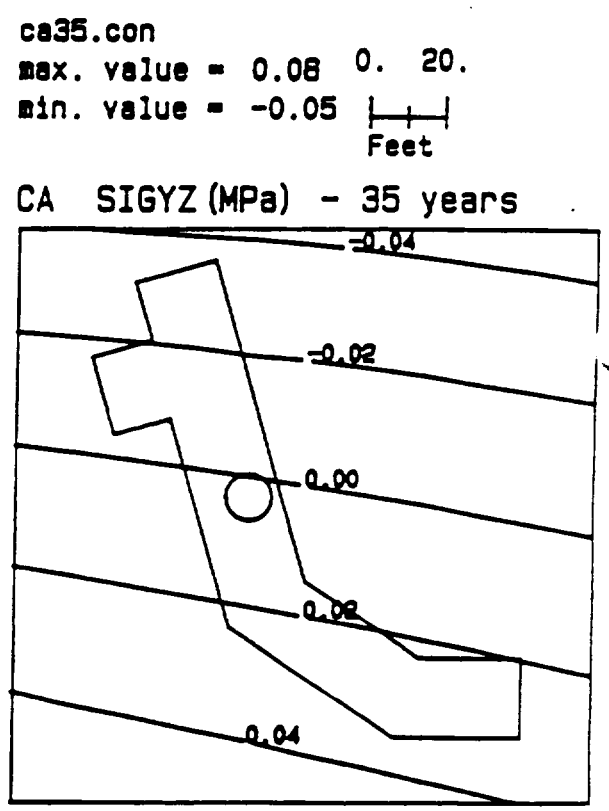

Figure C-52. Upper Demonstration Breakout Room (BR) and the Calico Hills Drill Room (CA): Changes in Shear Stress σ_{yz} at 35 Years After Waste Emplacement Begins

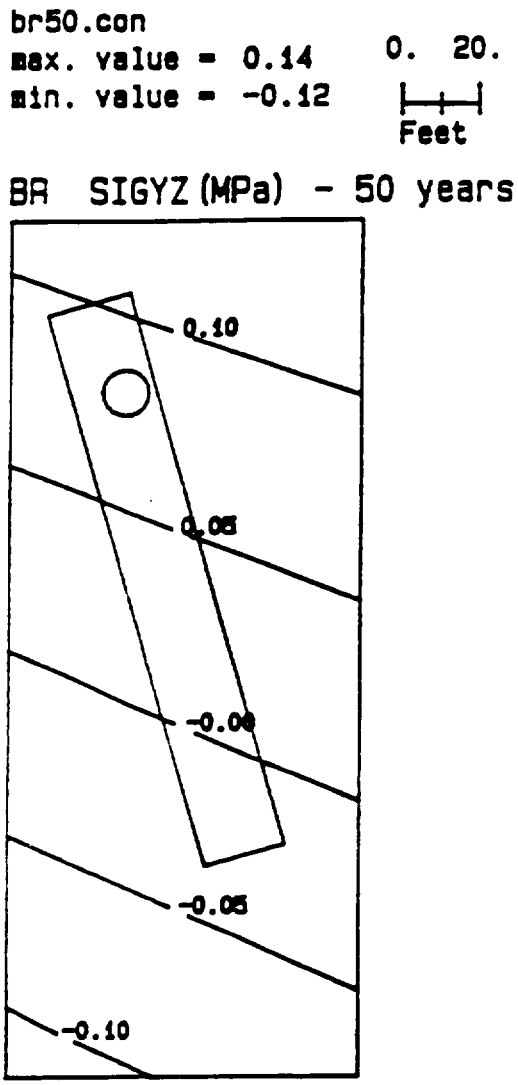

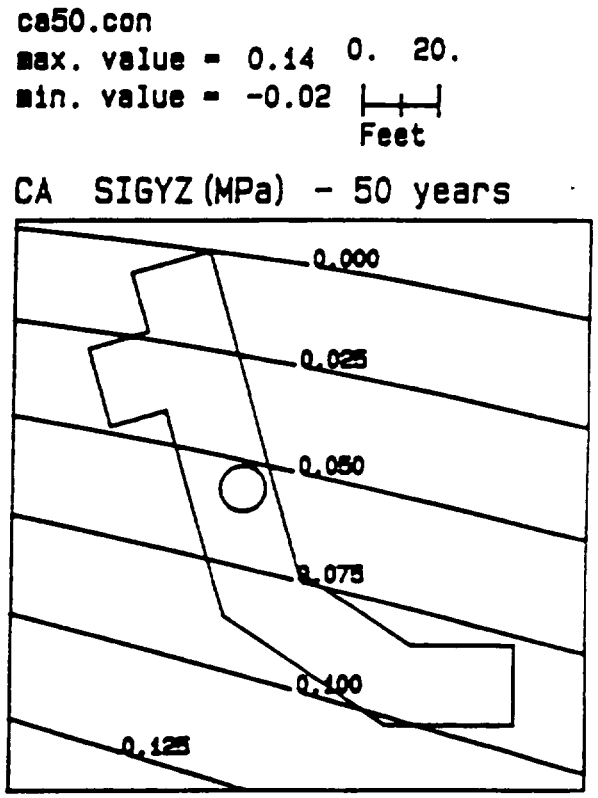

Figure C-53. Upper Demonstration Breakout Room (BR) and the Calico Hills Drill Room (CA): Changes in Shear Stress σ_{yz} at 50 Years After Waste Emplacement Begins

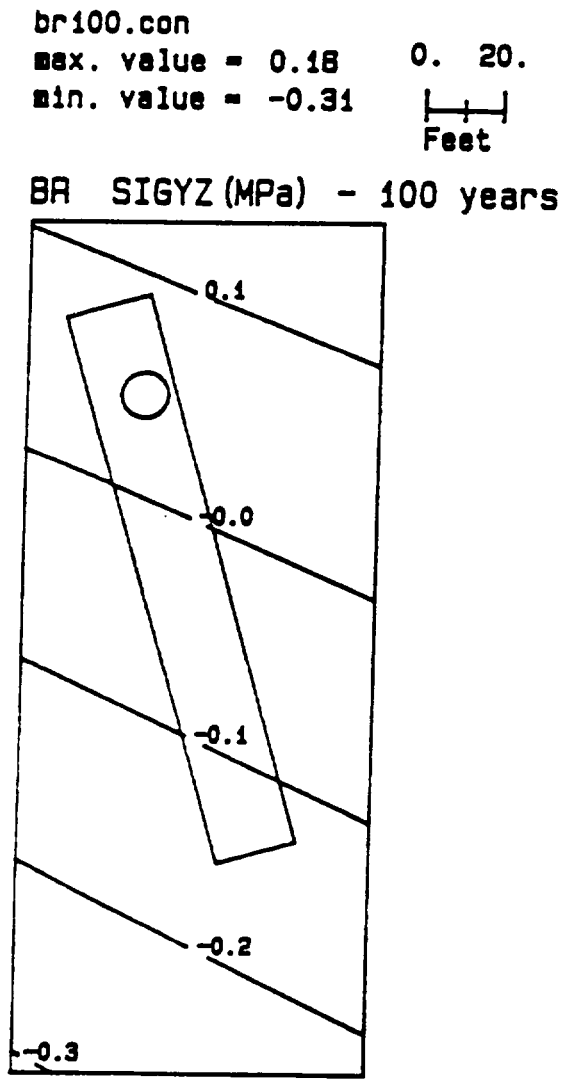

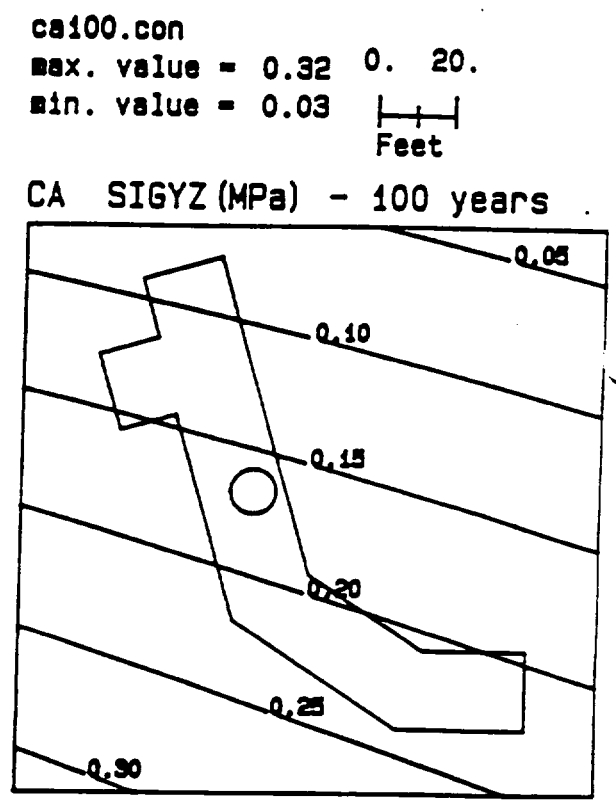

Figure C-54. Upper Demonstration Breakout Room (BR) and the Calico Hills Drill Room (CA): Changes in Shear Stress σ_{yz} at 100 Years After Waste Emplacement Begins

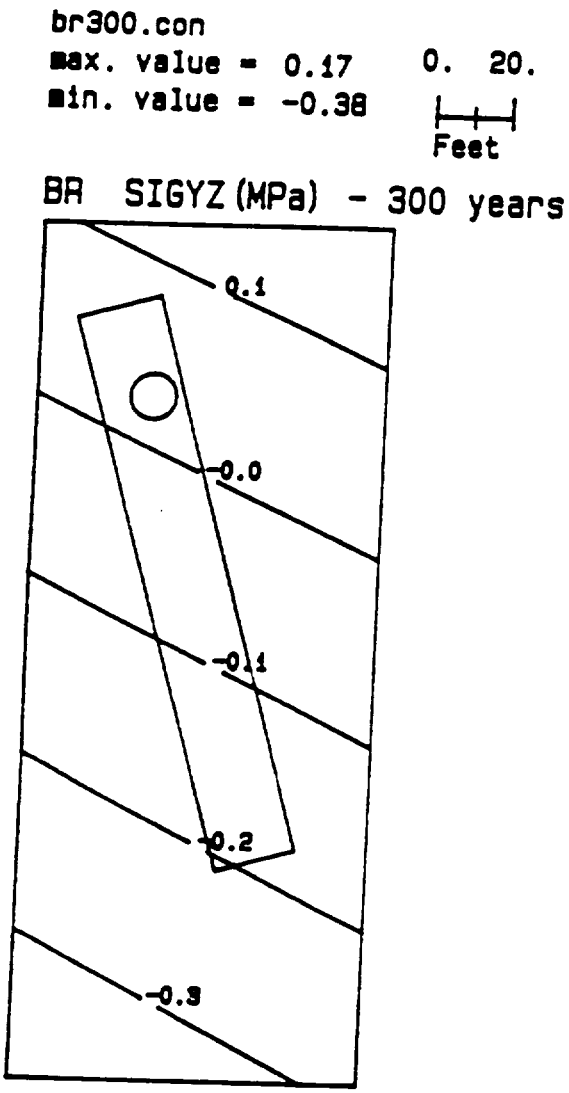

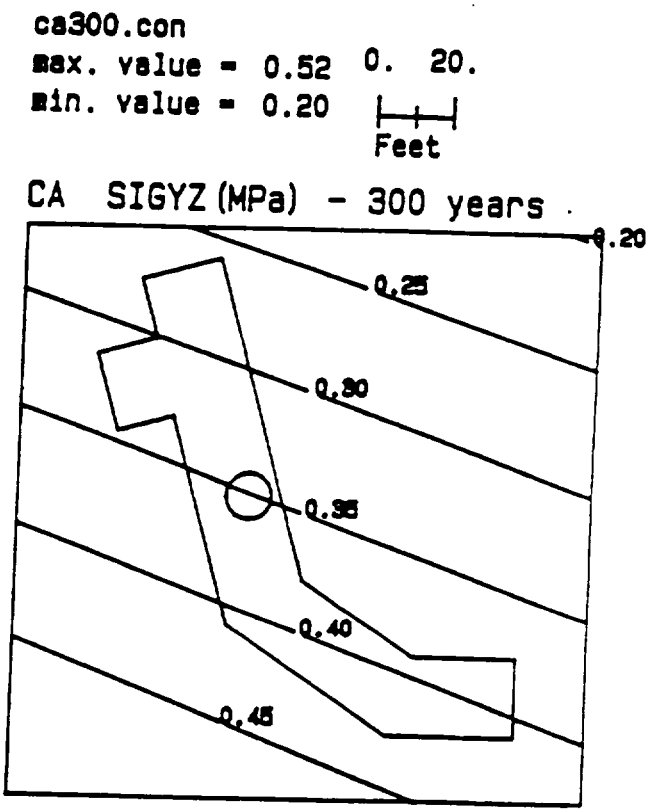

Figure C-55. Upper Demonstration Breakout Room (BR) and the Calico Hills Drill Room (CA): Changes in Shear Stress σ_{yz} at 300 Years After Waste Emplacement Begins

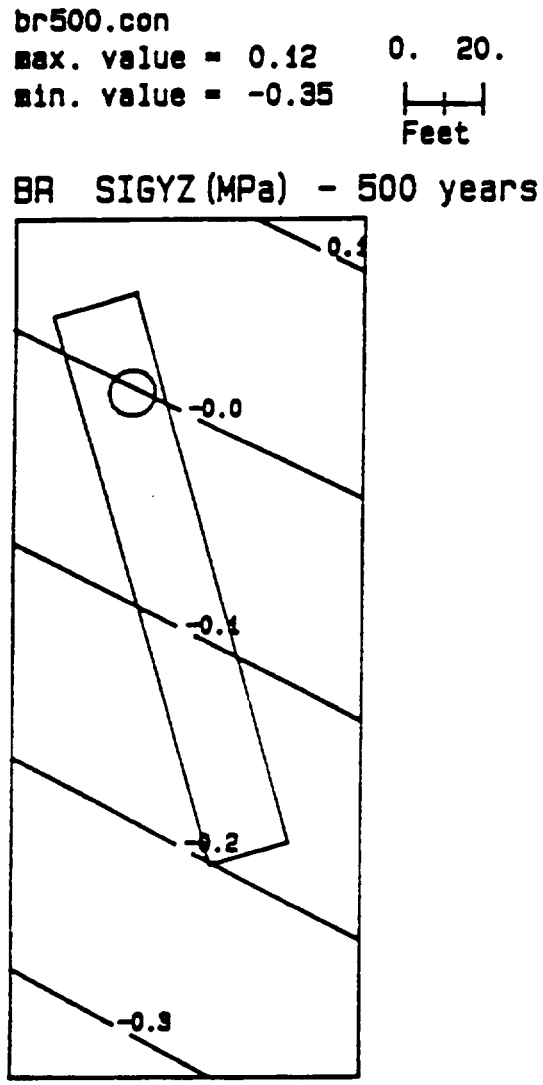

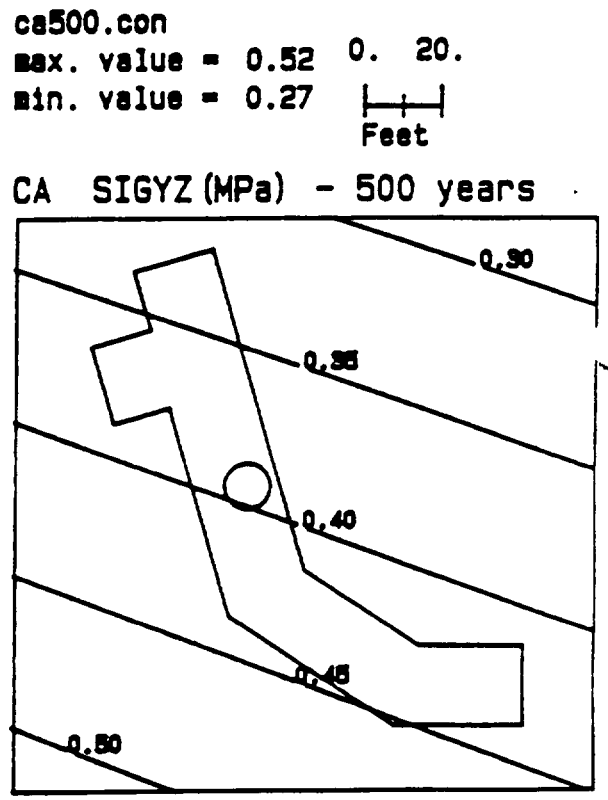

Figure C-56. Upper Demonstration Breakout Room (BR) and the Calico Hills Drill Room (CA): Changes in Shear Stress σ_{yz} at 500 Years After Waste Emplacement Begins

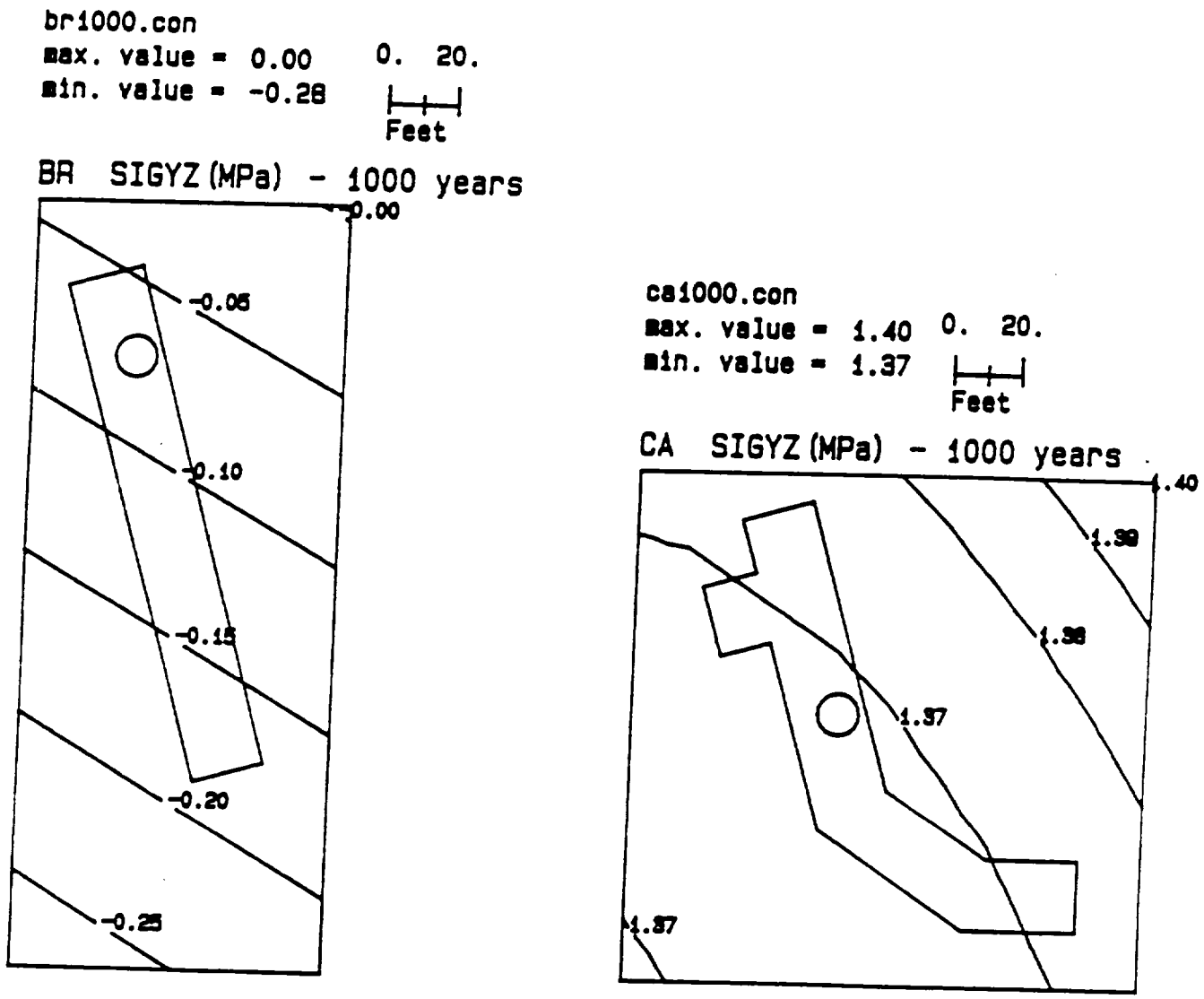

Figure C-57. Upper Demonstration Breakout Room (BR) and the Calico Hills Drill Room (CA): Changes in Shear Stress σ_{yz} at 1,000 Years After Waste Emplacement Begins

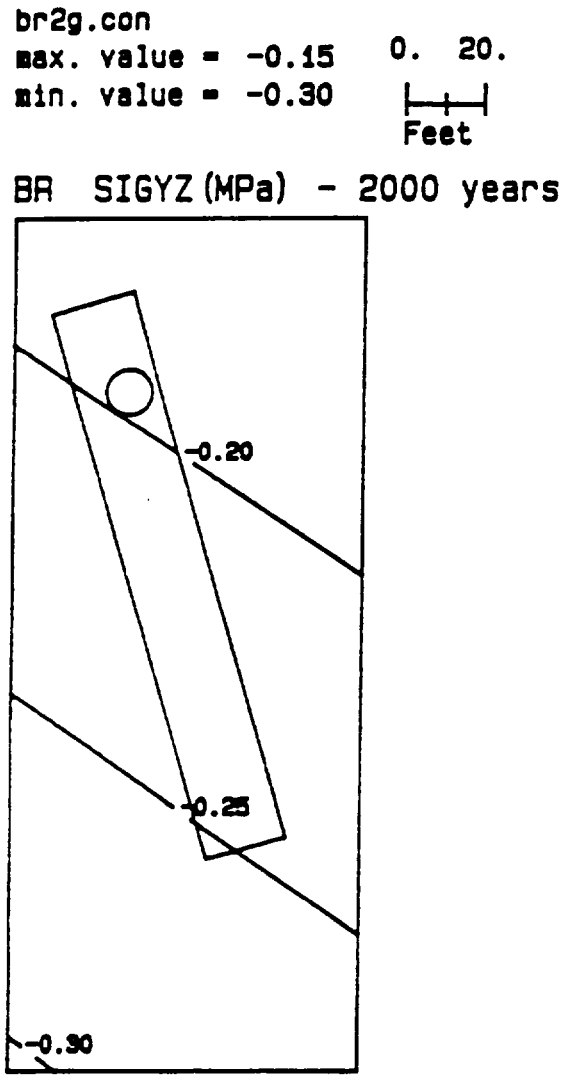

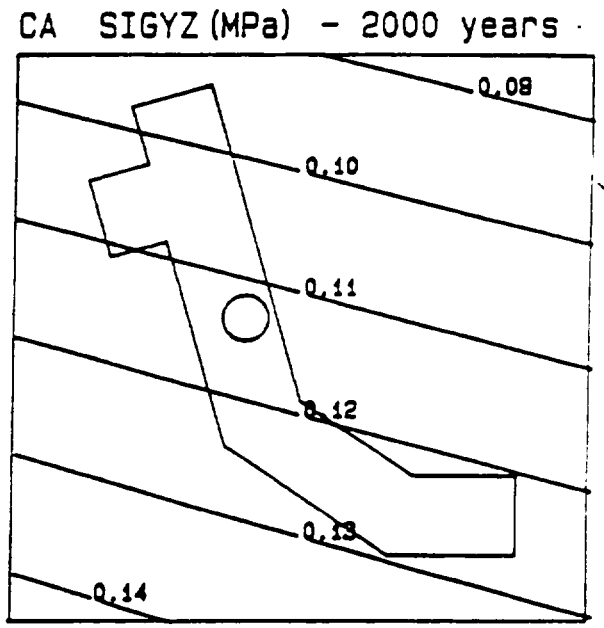

Figure C-58. Upper Demonstration Breakout Room (BR) and the Calico Hills Drill Room (CA): Changes in Shear Stress σ_{yz} at 2,000 Years After Waste Emplacement Begins

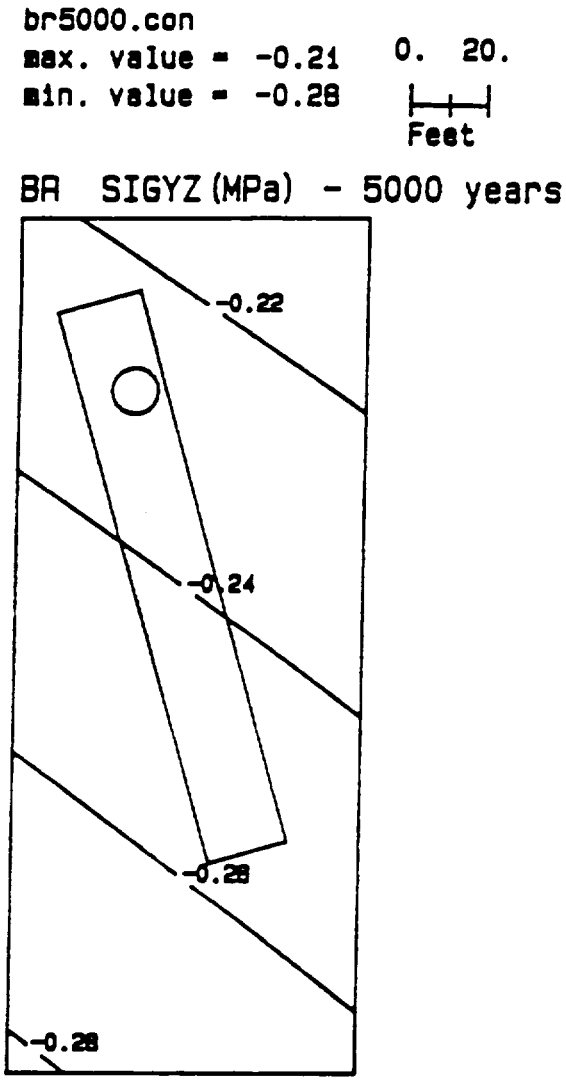

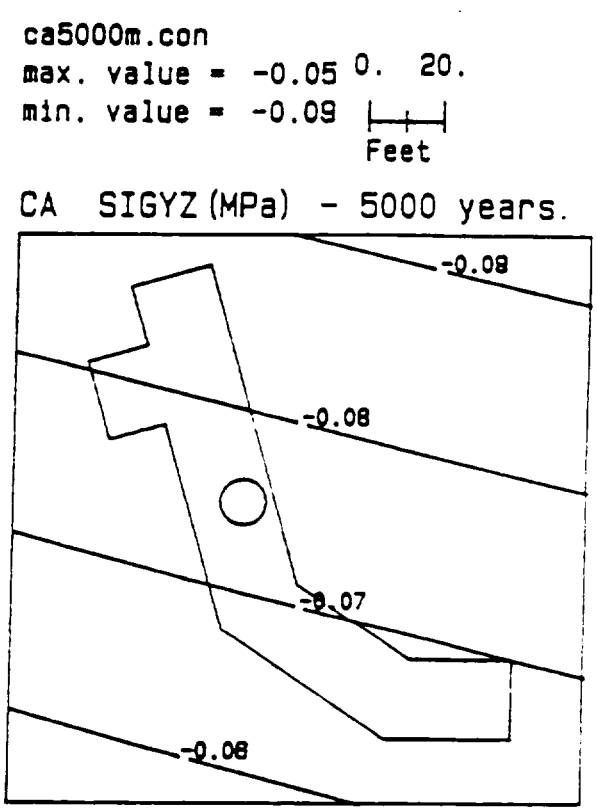

Figure C-59. Upper Demonstration Breakout Room (BR) and the Calico Hills Drill Room (CA): Changes in Shear Stress σ_{yz} at 5,000 Years After Waste Emplacement Begins

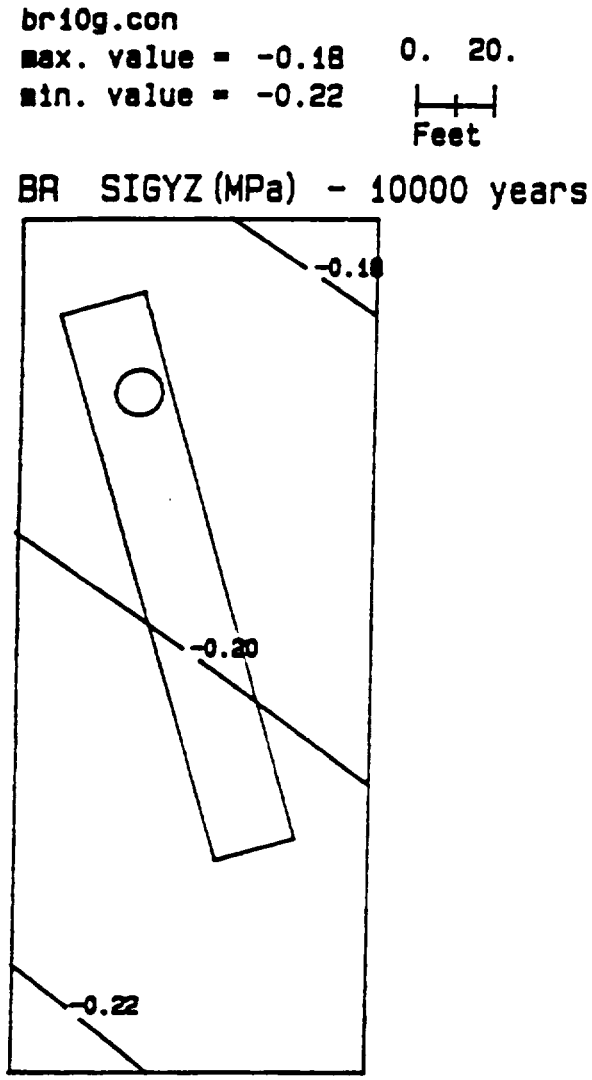

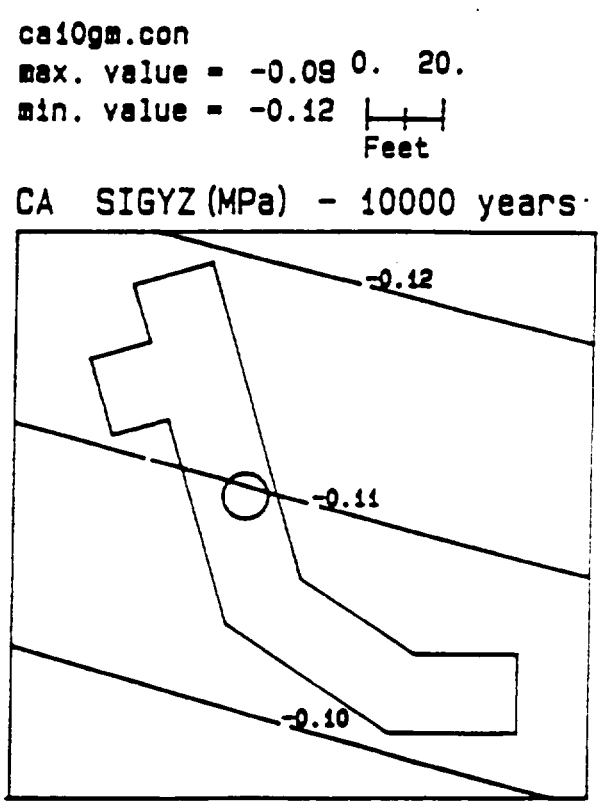

Figure C-60. Upper Demonstration Breakout Room (BR) and the Calico Hills Drill Room (CA): Changes in Shear Stress σ_{yz} at 10,000 Years After Waste Emplacement Begins

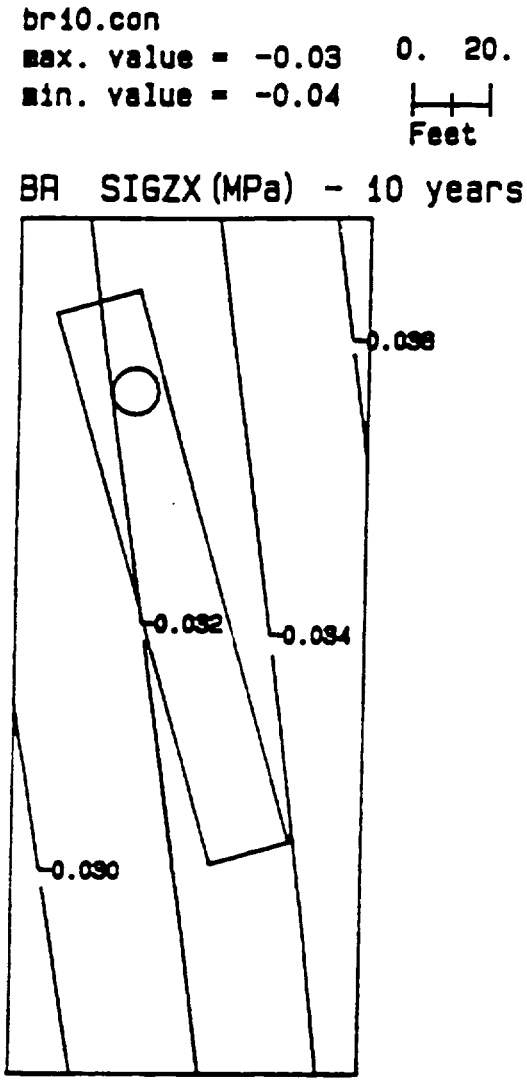

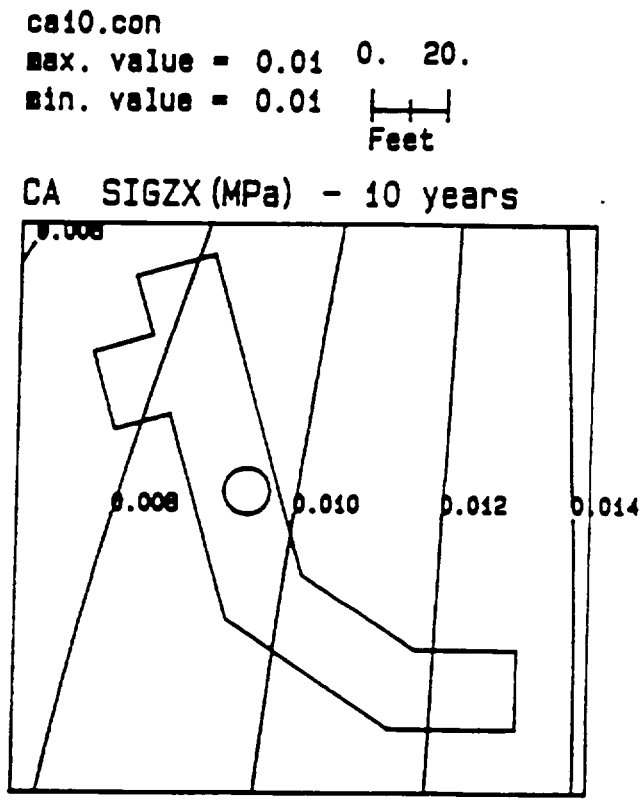

Figure C-61. Upper Demonstration Breakout Room (BR) and the Calico Hills Drill Room (CA): Changes in Shear Stress σ_{zx} at 10 Years After Waste Emplacement Begins

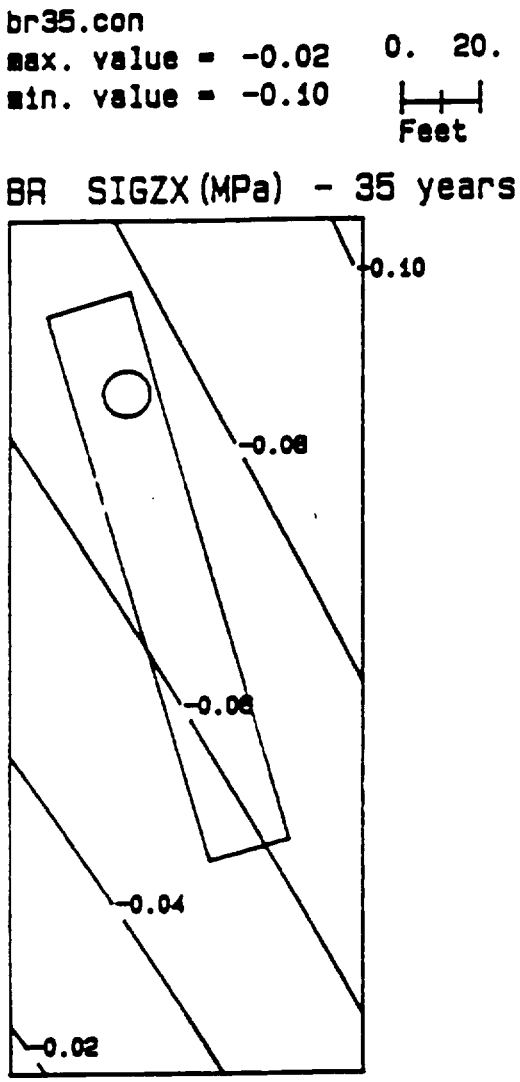

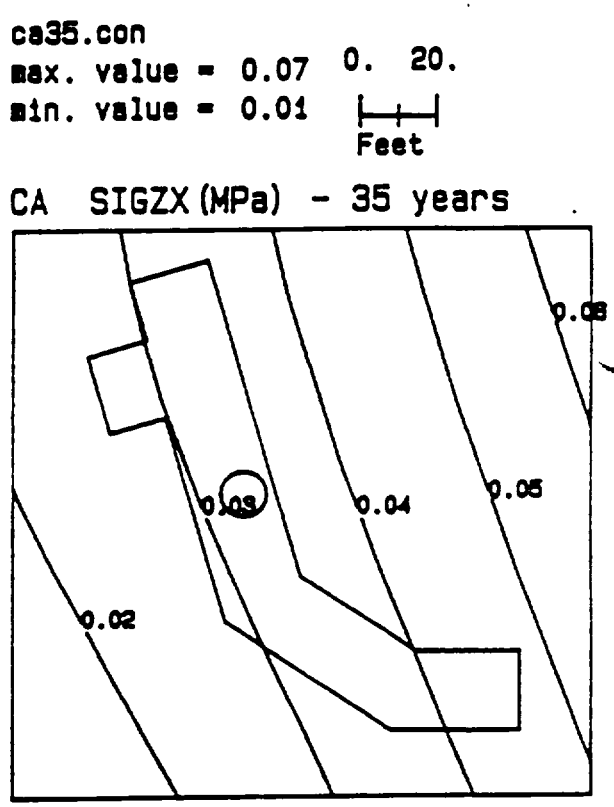

Figure C-62. Upper Demonstration Breakout Room (BR) and the Calico Hills Drill Room (CA): Changes in Shear Stress σ_{zx} at 35 Years After Waste Emplacement Begins

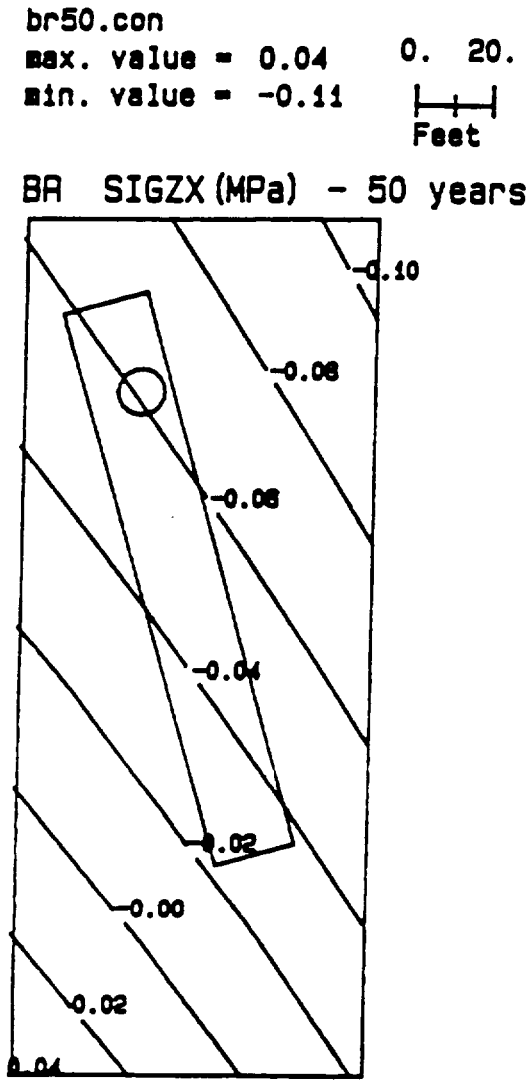

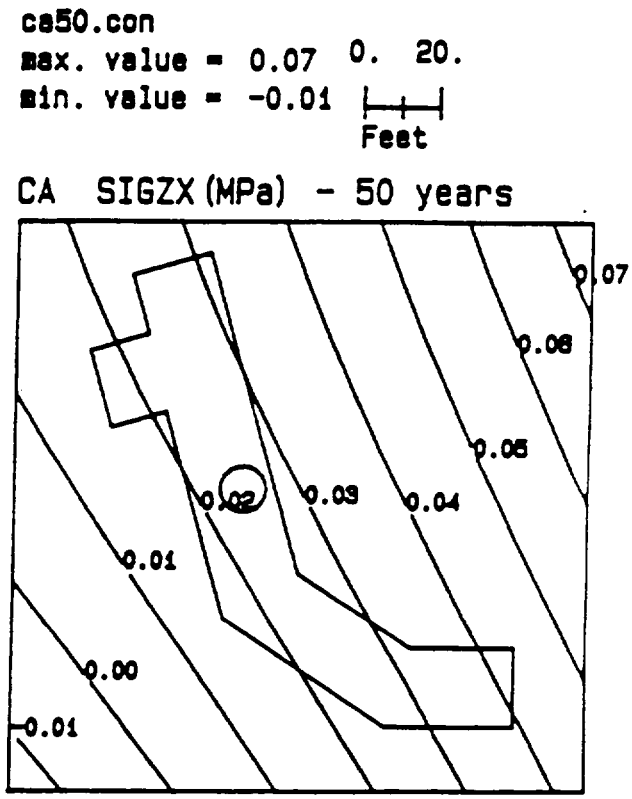

Figure C-63. Upper Demonstration Breakout Room (BR) and the Calico Hills Drill Room (CA): Changes in Shear Stress σ_{zx} at 50 Years After Waste Emplacement Begins

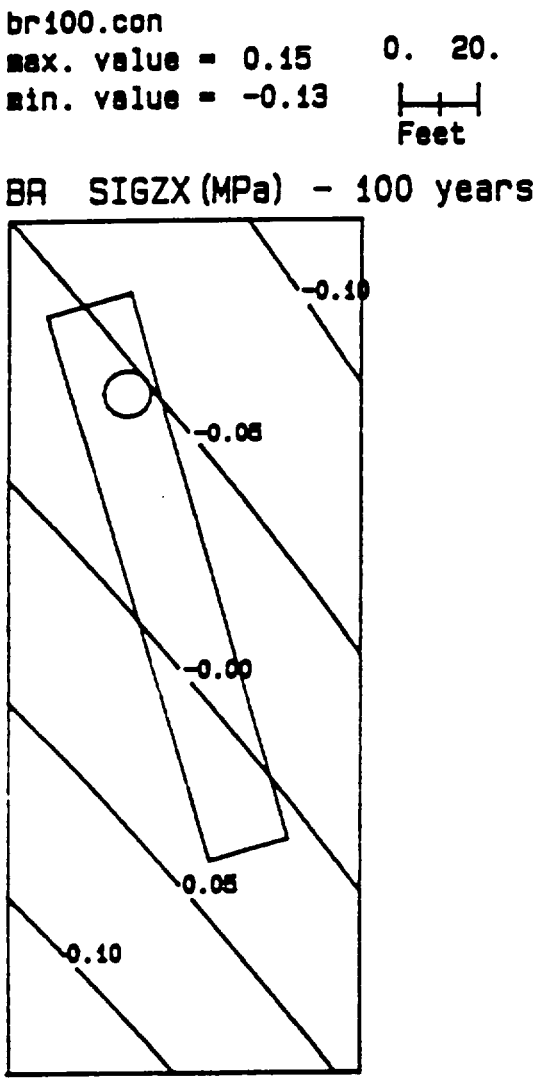

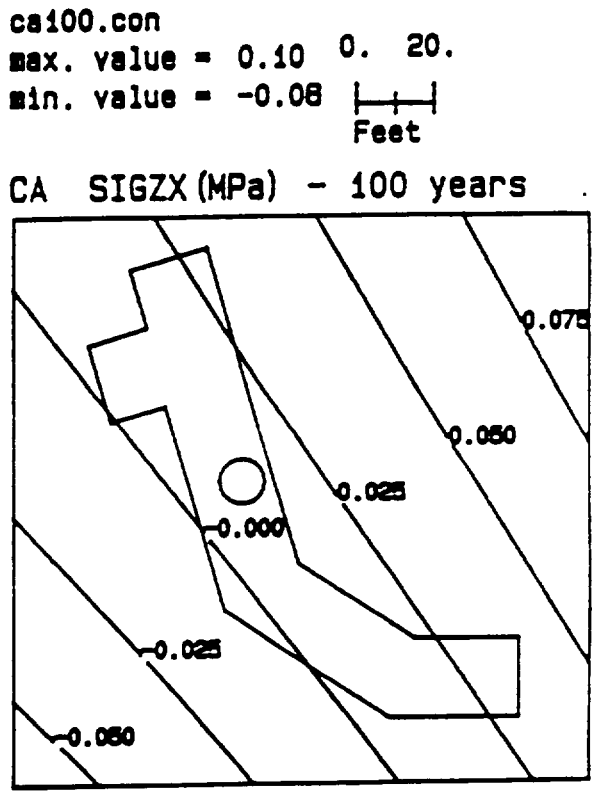

Figure C-64. Upper Demonstration Breakout Room (BR) and the Calico Hills Drill Room (CA): Changes in Shear Stress σ_{xz} at 100 Years After Waste Emplacement Begins

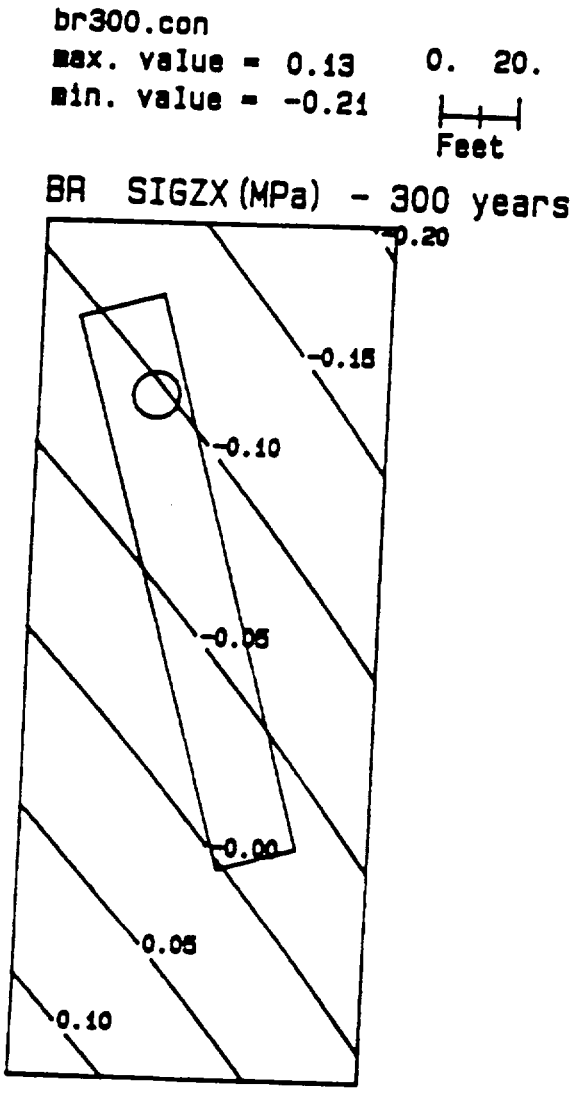

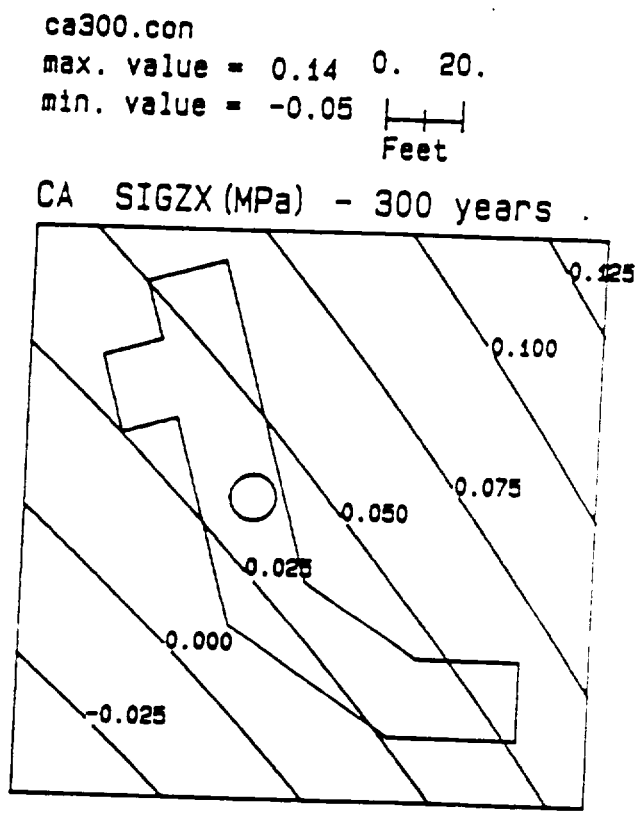

Figure C-65. Upper Demonstration Breakout Room (BR) and the Calico Hills Drill Room (CA): Changes in Shear Stress σ_{zx} at 300 Years After Waste Emplacement Begins

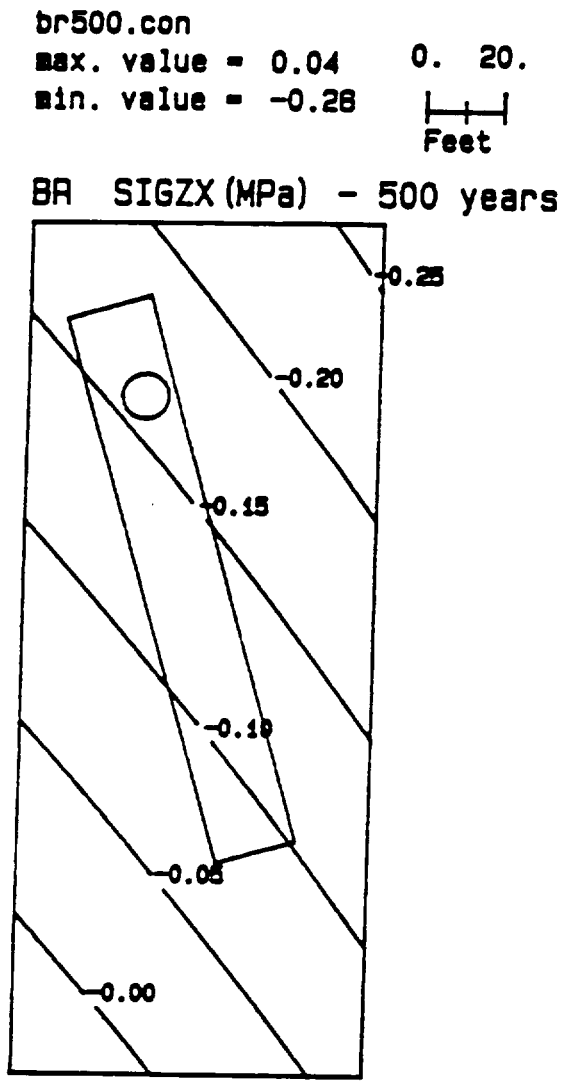

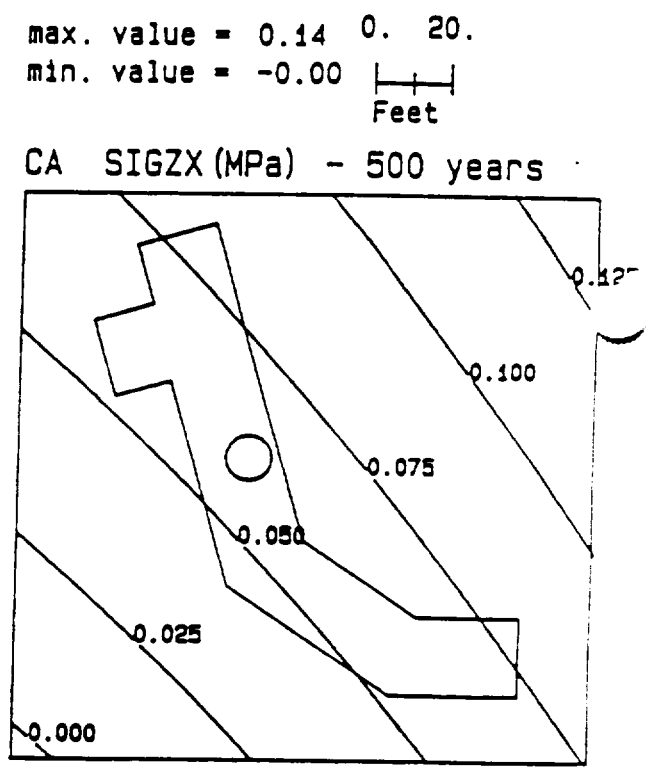

Figure C-66. Upper Demonstration Breakout Room (BR) and the Calico Hills Drill Room (CA): Changes in Shear Stress σ_{zx} at 500 Years After Waste Emplacement Begins

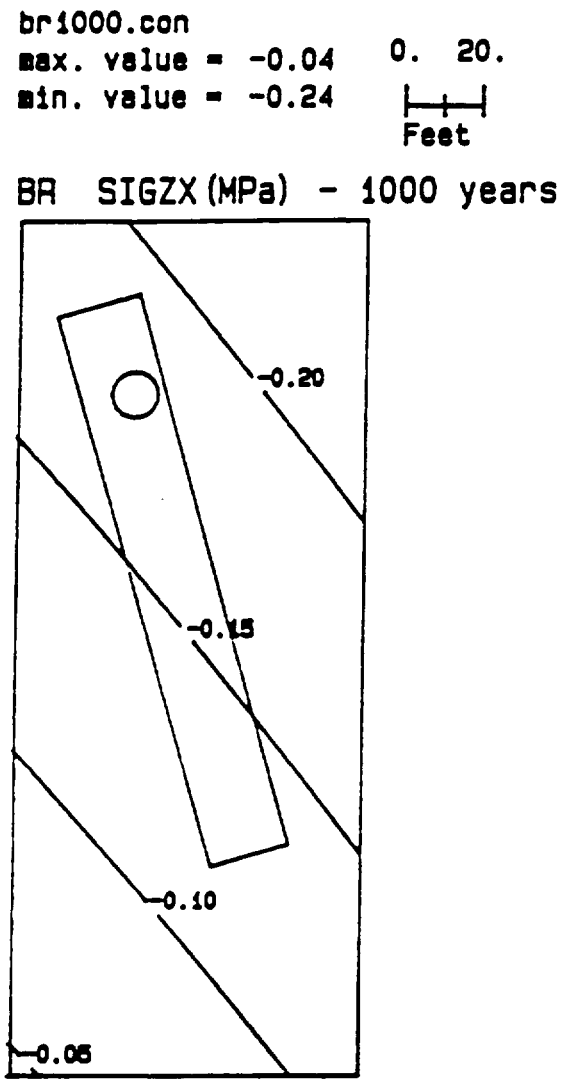

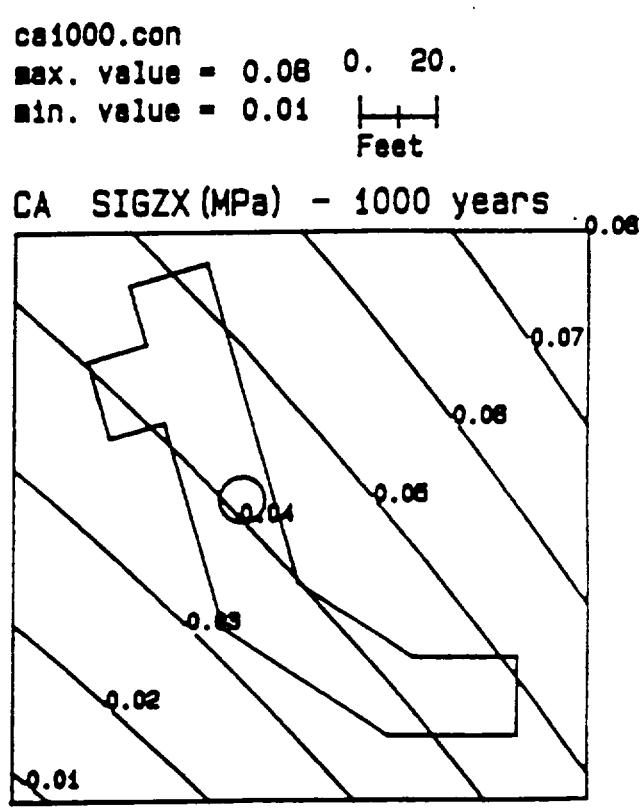

Figure C-67. Upper Demonstration Breakout Room (BR) and the Calico Hills Drill Room (CA): Changes in Shear Stress σ_{zx} at 1,000 Years After Waste Emplacement Begins

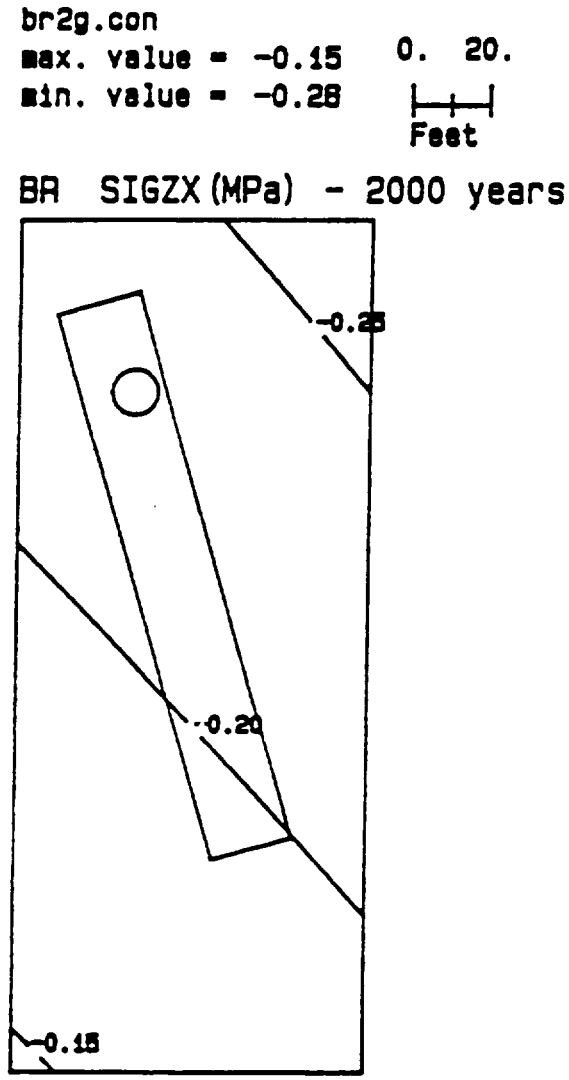

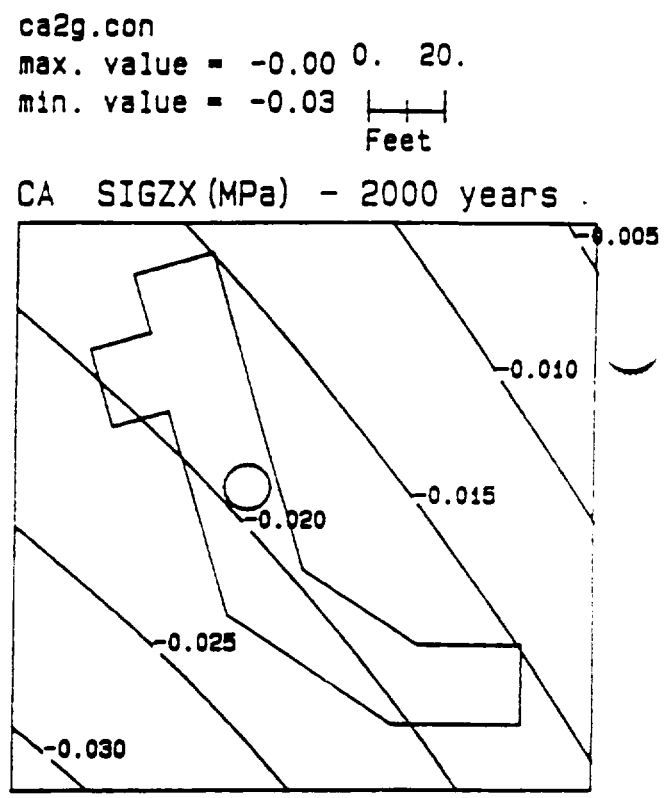

Figure C-68. Upper Demonstration Breakout Room (BR) and the Calico Hills Drill Room (CA): Changes in Shear Stress σ_{zx} at 2,000 Years After Waste Emplacement Begins

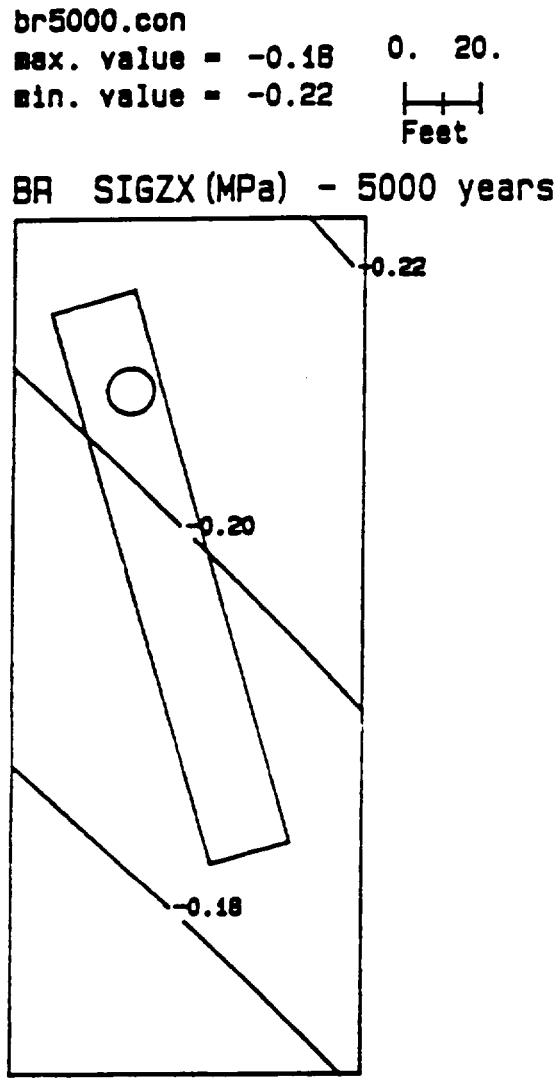

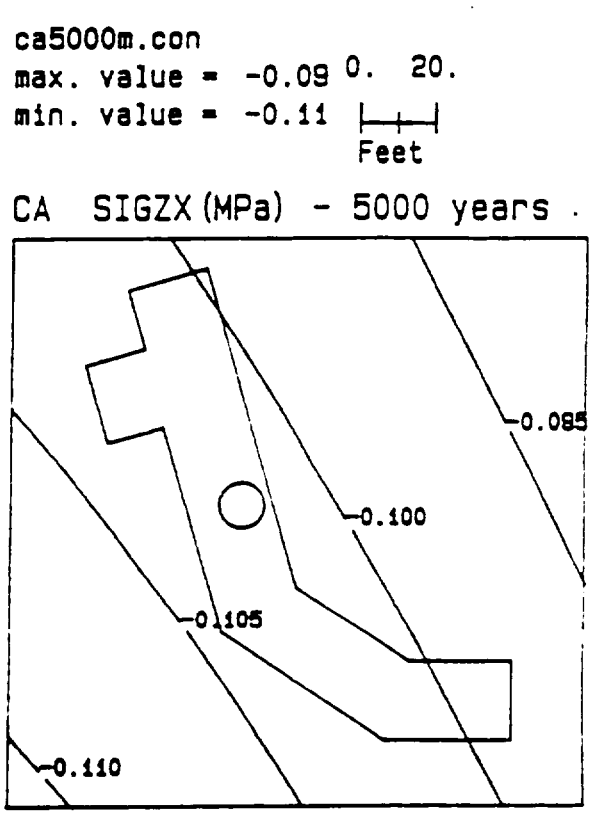

Figure C-69. Upper Demonstration Breakout Room (BR) and the Calico Hills Drill Room (CA): Changes in Shear Stress σ_{zx} at 5,000 Years After Waste Emplacement Begins

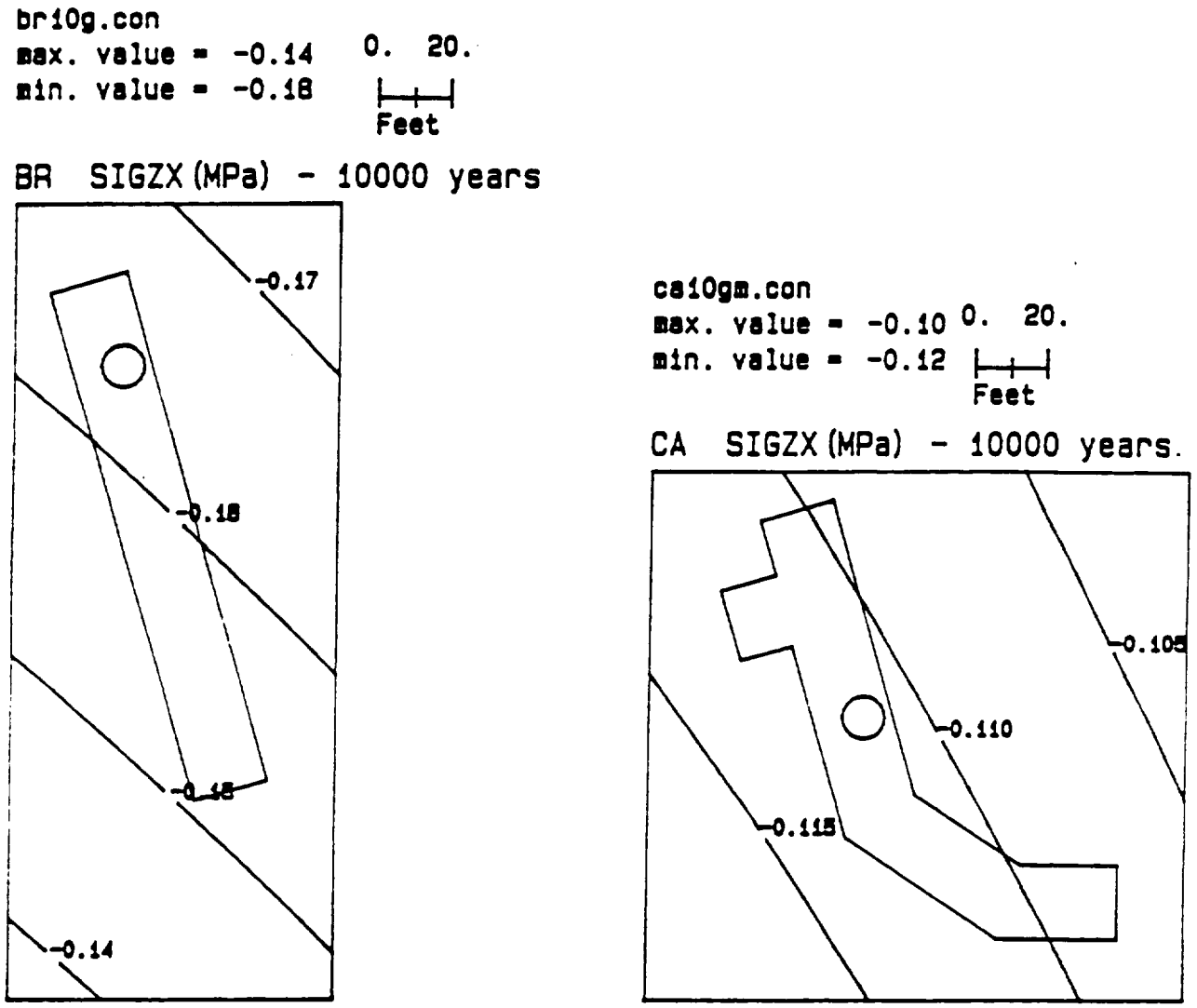

Figure C-70. Upper Demonstration Breakout Room (BR) and the Calico Hills Drill Room (CA): Changes in Shear Stress σ_{zx} at 10,000 Years After Waste Emplacement Begins

APPENDIX D

Temperature and Induced Stresses ($\Delta\sigma_{x'x'}, \Delta\sigma_{y'y'}, \Delta\sigma_{z'z'}, \Delta\sigma_{x'y'}$) for the Tuff Main Drift, and Drifts CE and F'G' (Local Coordinate System $x' - y' - z'$ and Sign Conventions for Stresses are given in Figure D-16)

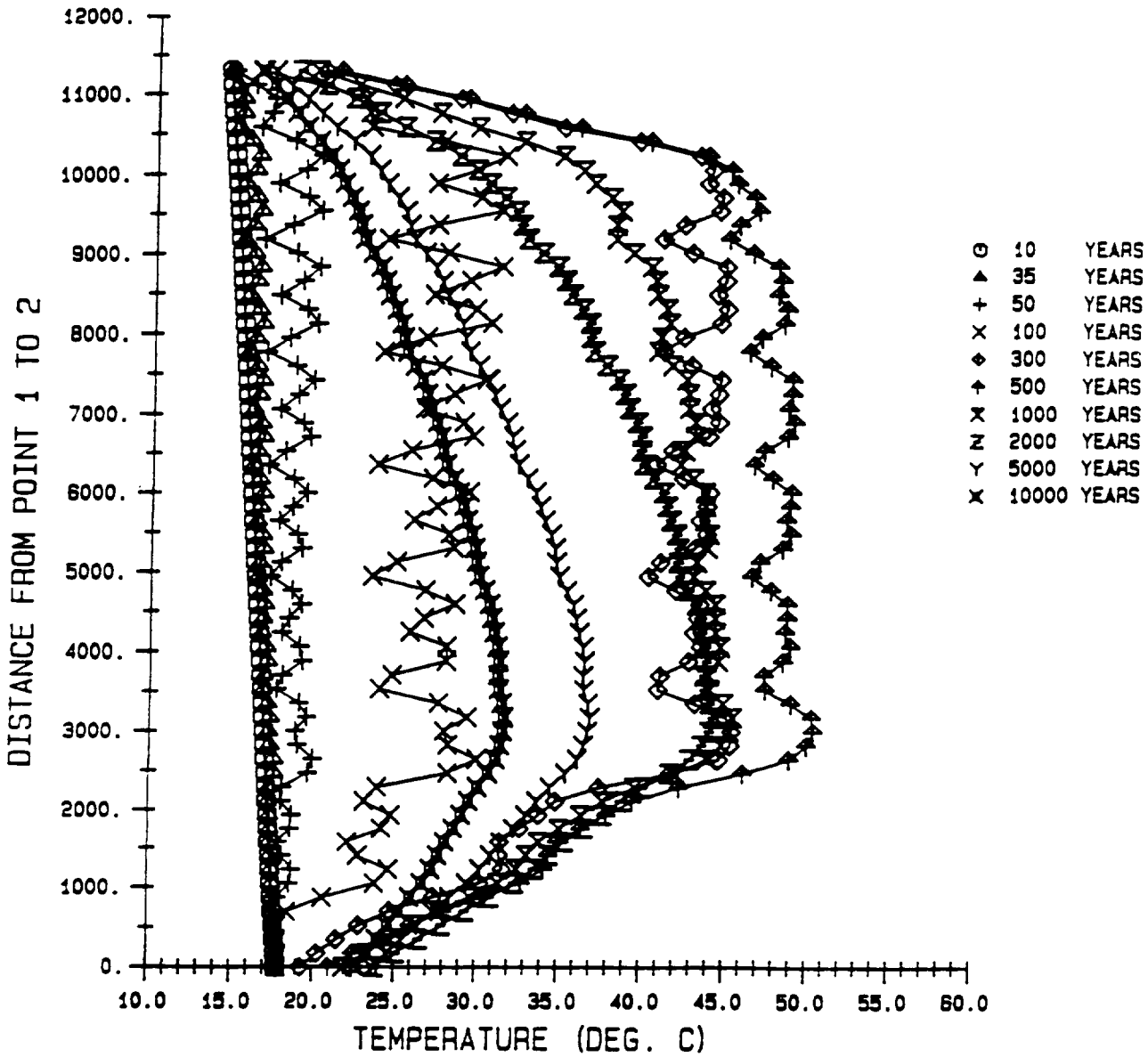

Figure D-1. Tuff Main Drift: Temperature Histories for 10 to 10,000 Years After Waste Emplacement Begins

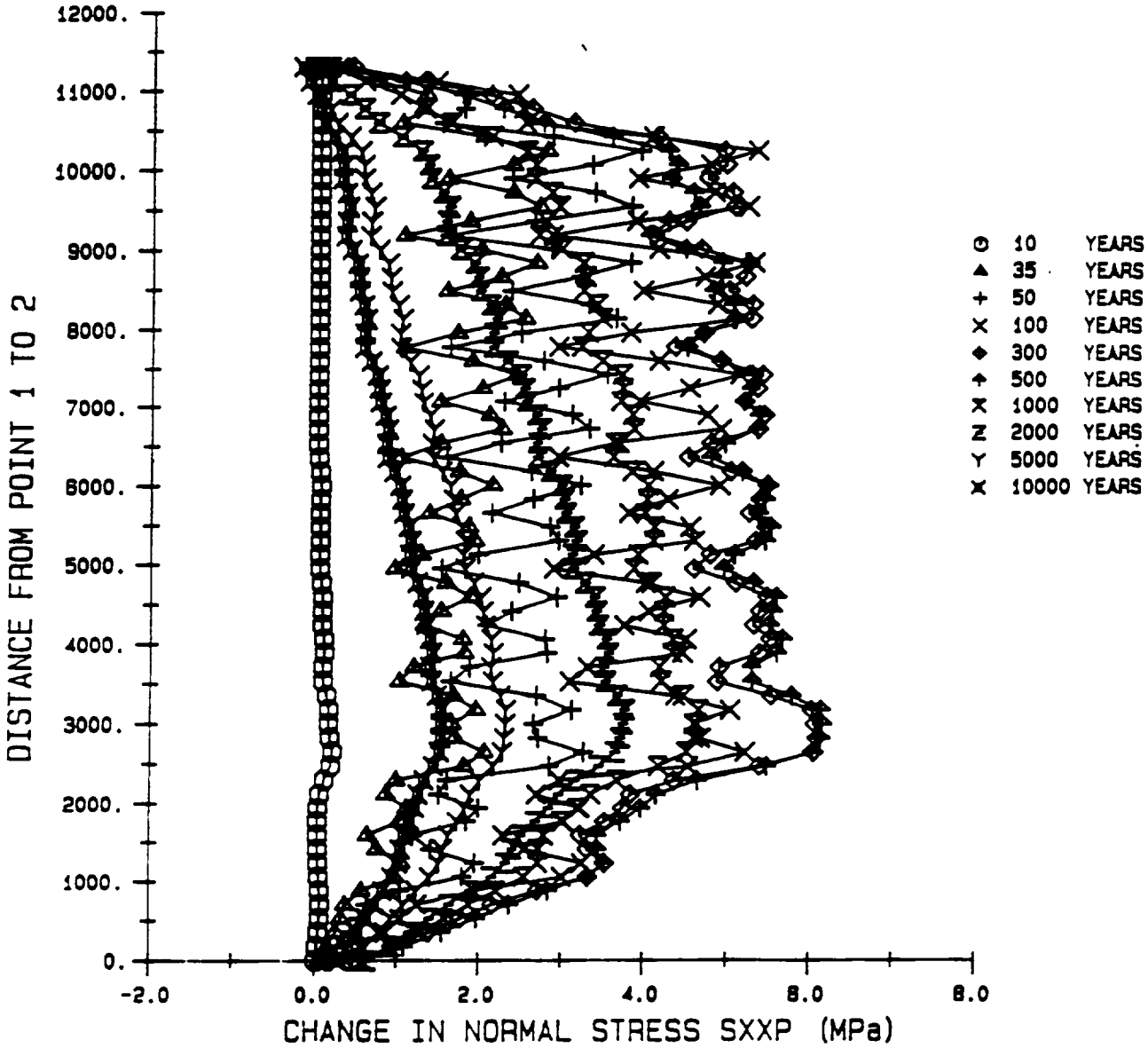

Figure D-2. Tuff Main Drift: Changes in Horizontal Normal Stress $\sigma_{x'x'}$ Acting on the Drift Springline for 10 to 10,000 Years After Waste Emplacement Begins

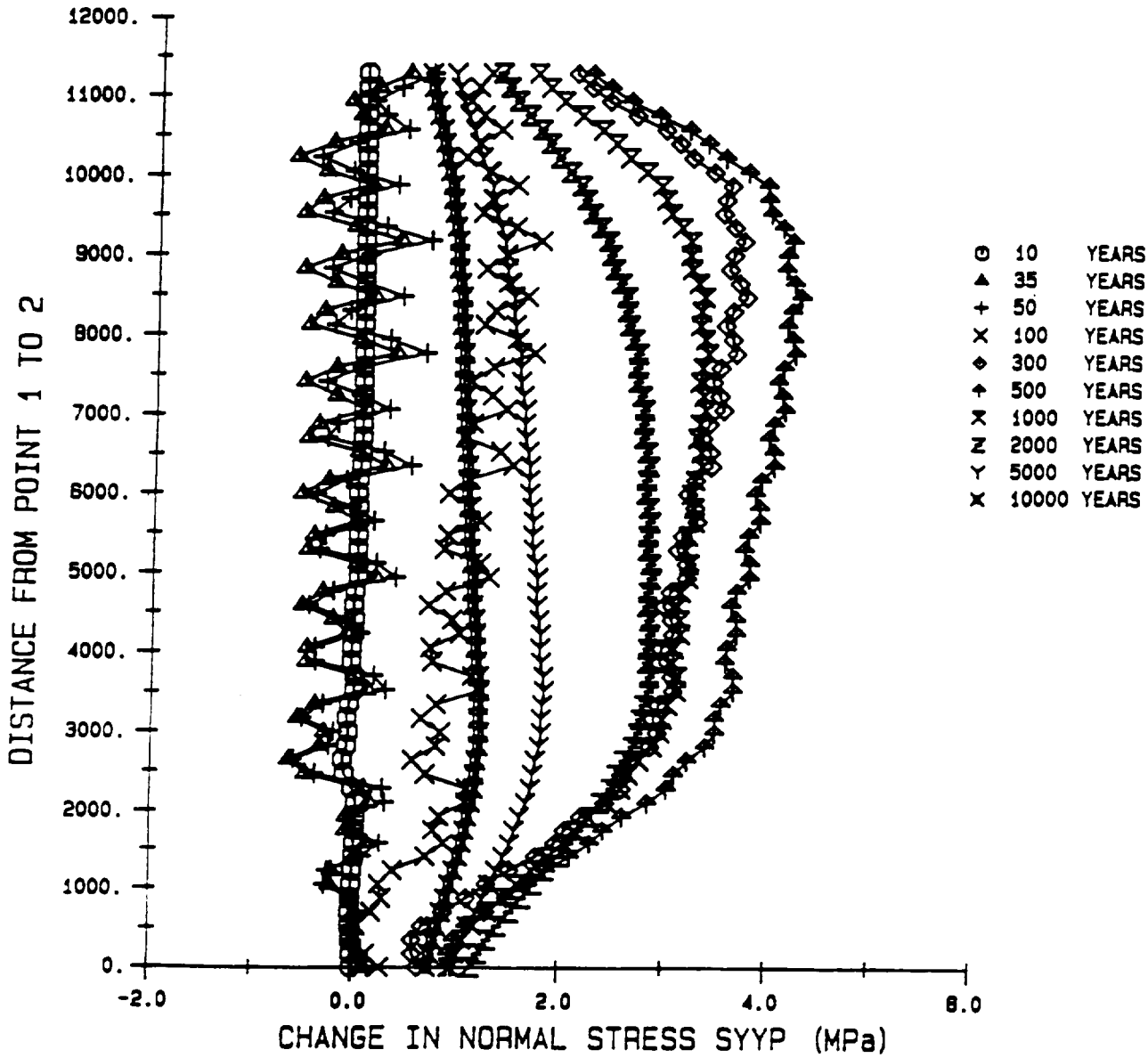

Figure D-3. Tuff Main Drift: Changes in Horizontal Normal Stress $\sigma_{y'y'}$ Acting Along the Drift Axis for 10 to 10,000 Years After Waste Emplacement Begins

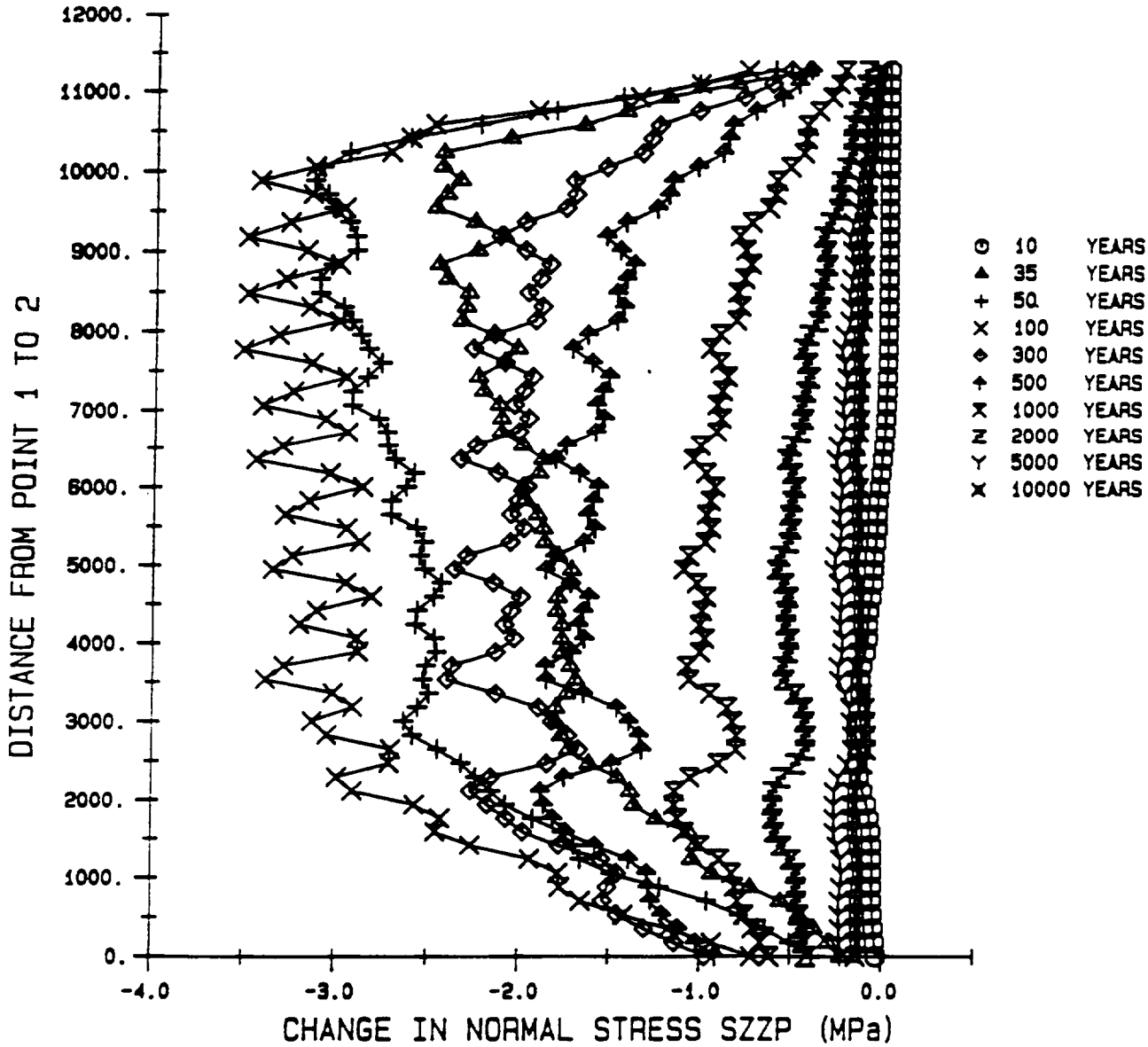

Figure D-4. Tuff Main Drift: Changes in Vertical Normal Stress $\sigma_{z'z'}$ Acting on the Drift Crown for 10 to 10,000 Years After Waste Emplacement Begins

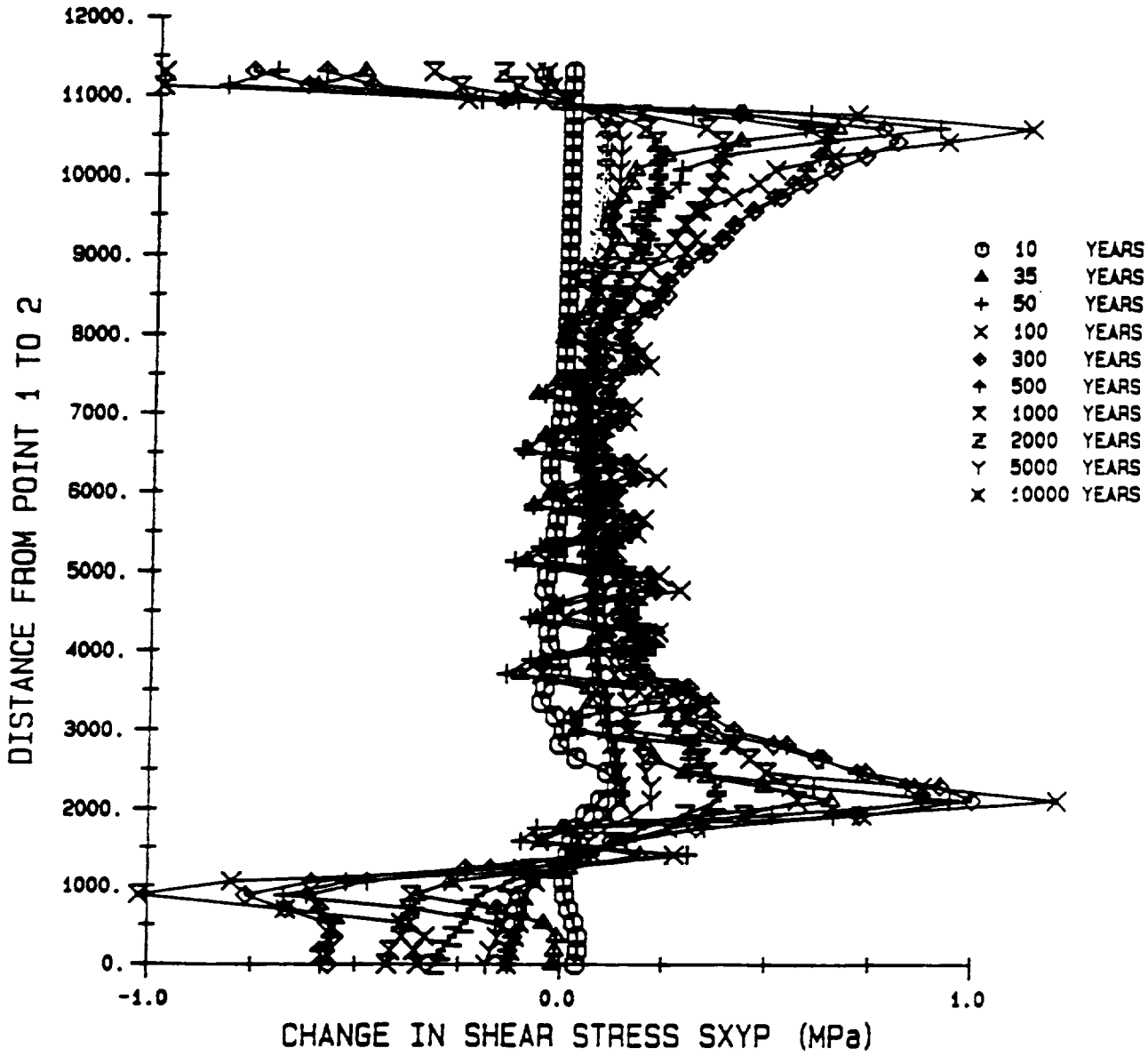

Figure D-5. Tuff Main Drift: Changes in Shear Stress $\sigma_{x'y'}$ for 10 to 10,000 Years After Waste Emplacement Begins. This Component of Shear Stress Acts Simultaneously on the Two Drift Springlines, the Drift Crown and the Drift Floor.

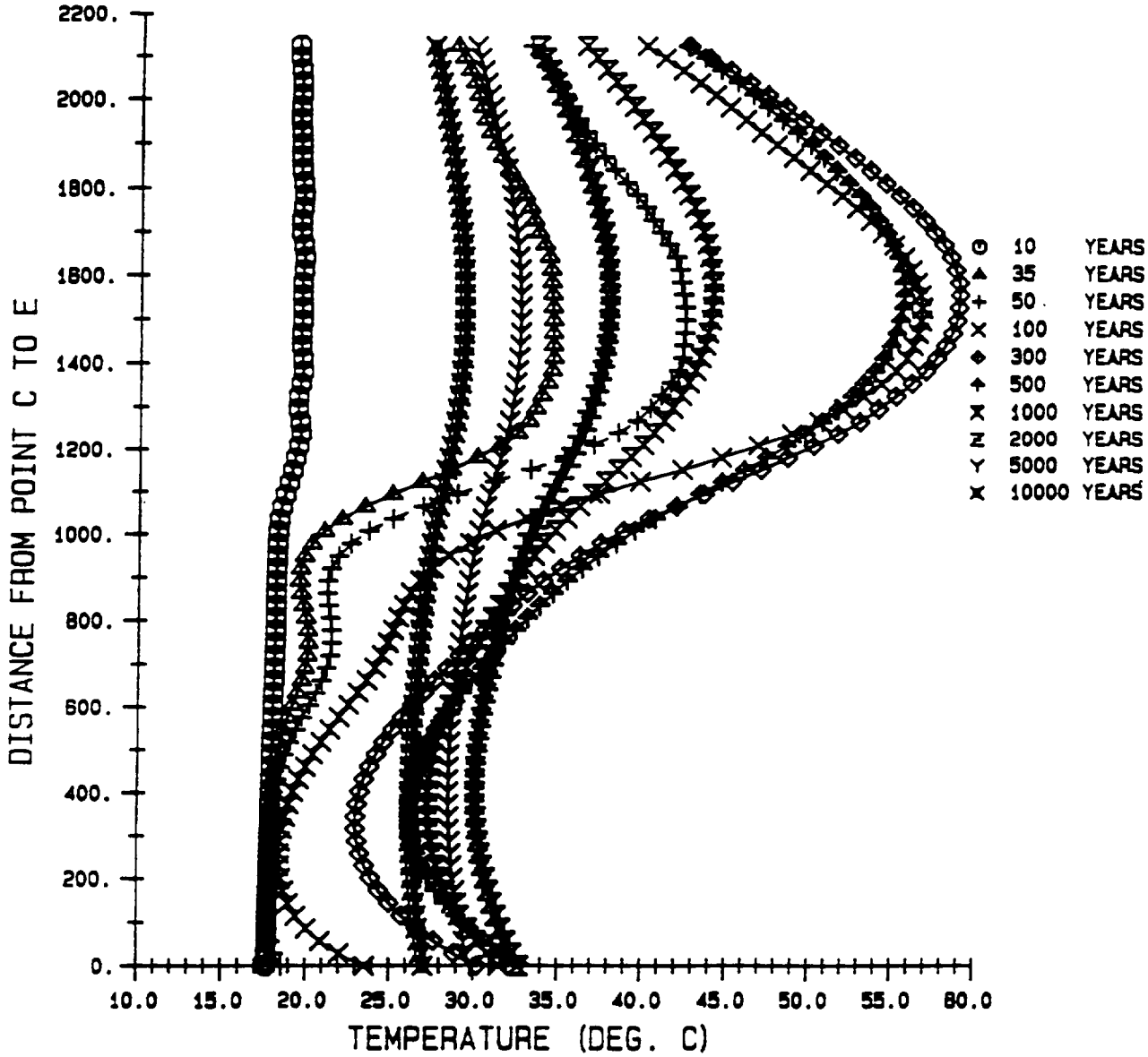

Figure D-6. Drift CE: Temperature Histories for 10 to 10,000 Years After Waste Emplacement Begins

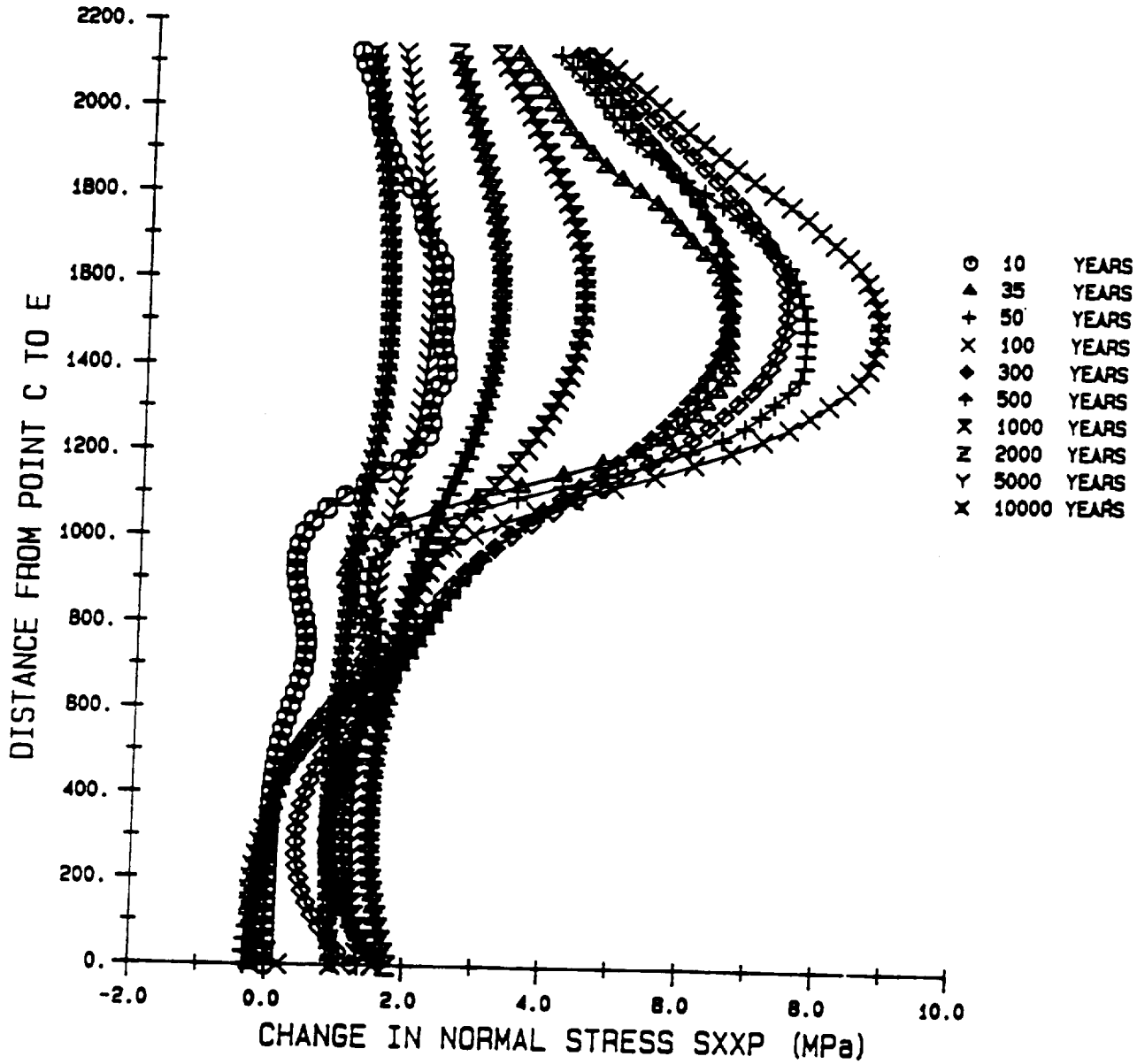

Figure D-7. Drift CE: Changes in Horizontal Normal Stress $\sigma_{x'x'}$ Acting on the Drift Springline for 10 to 10,000 Years After Waste Emplacement Begins

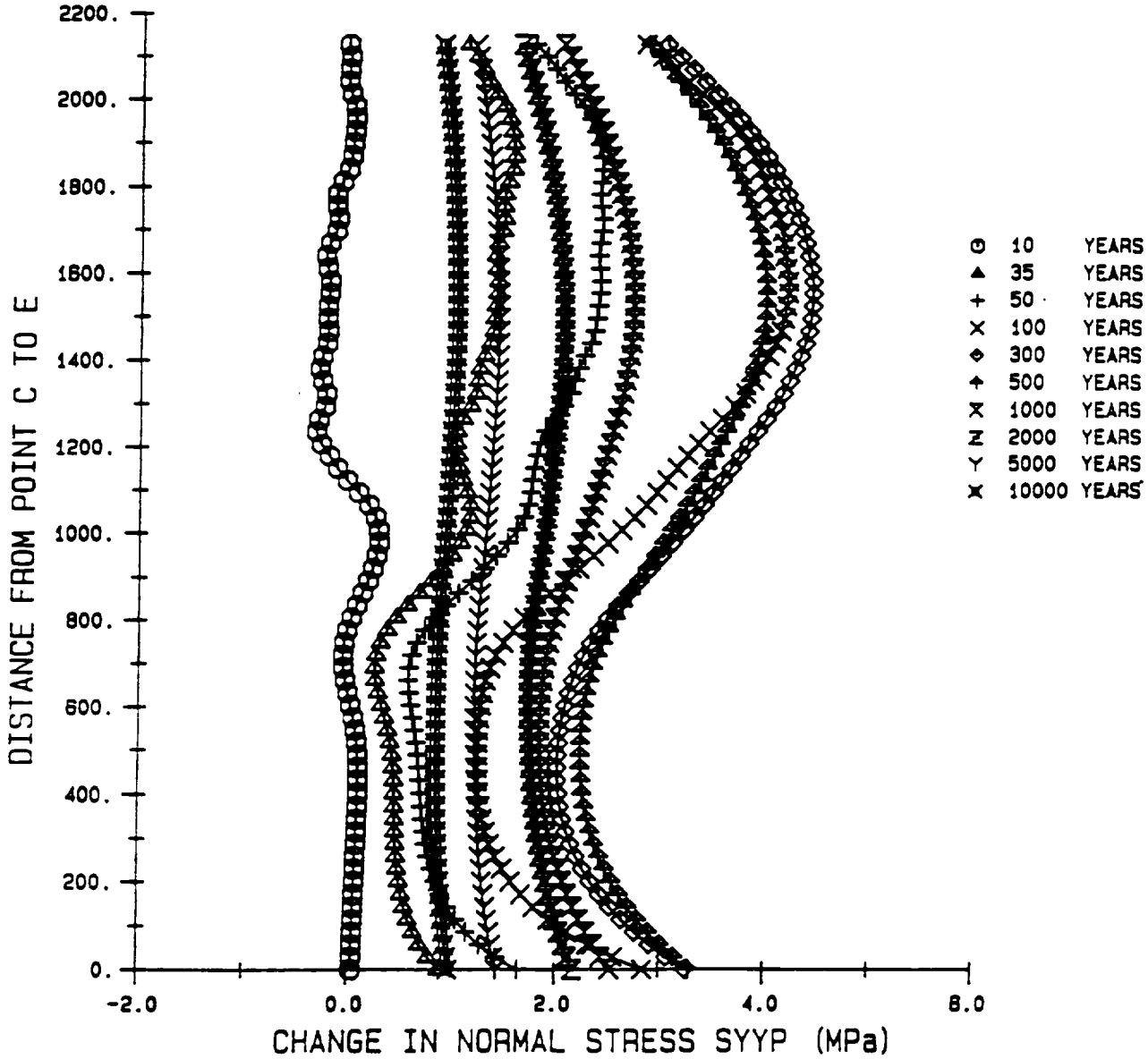

Figure D-8. Drift CE: Changes in Horizontal Normal Stress $\sigma_{y'y'}$ Acting Along the Drift Axis for 10 to 10,000 Years After Waste Emplacement Begins

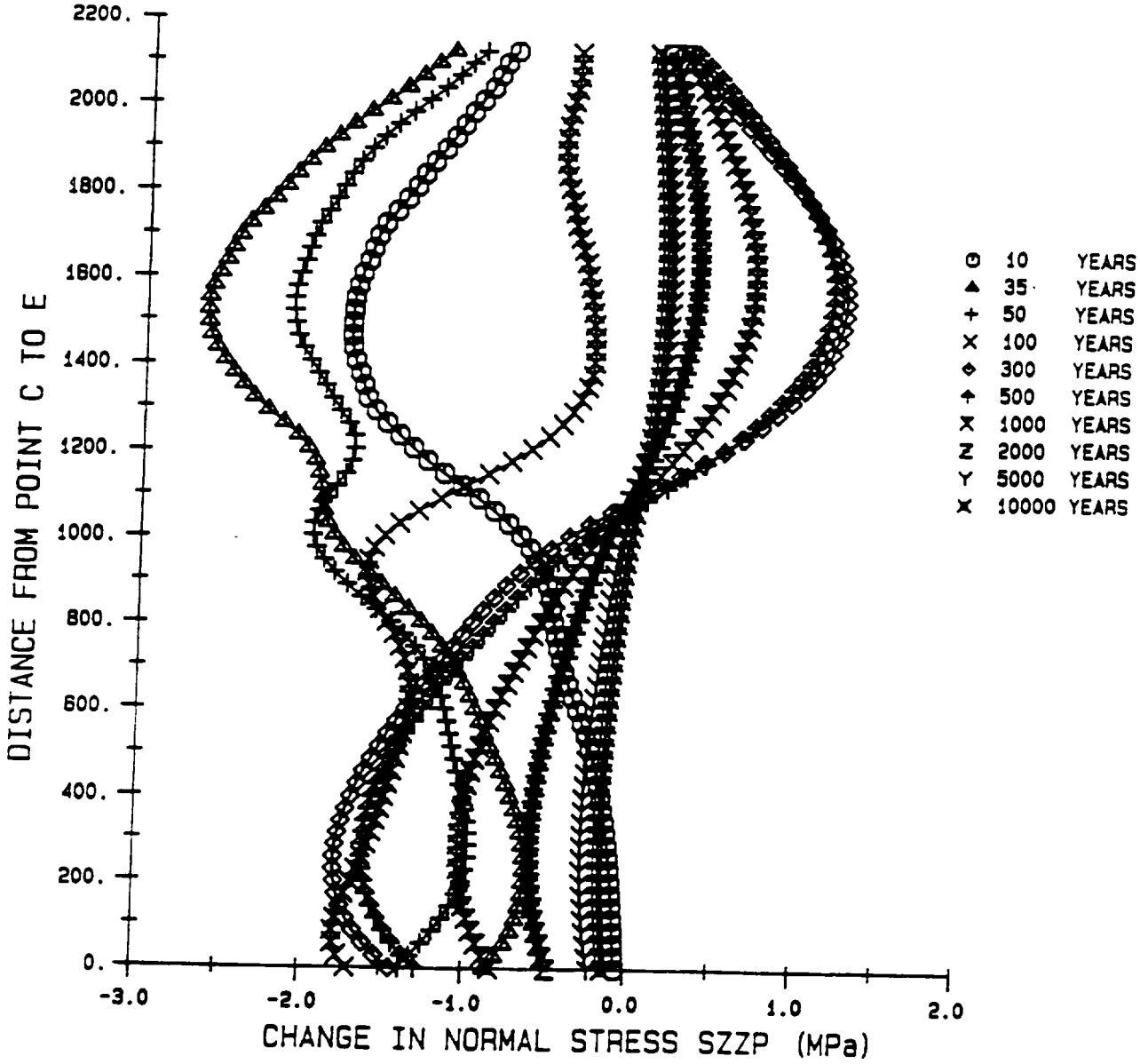

Figure D-9. Drift CE: Changes in Vertical Normal Stress $\sigma_{z'z'}$ Acting on the Drift Crown for 10 to 10,000 Years After Waste Emplacement Begins

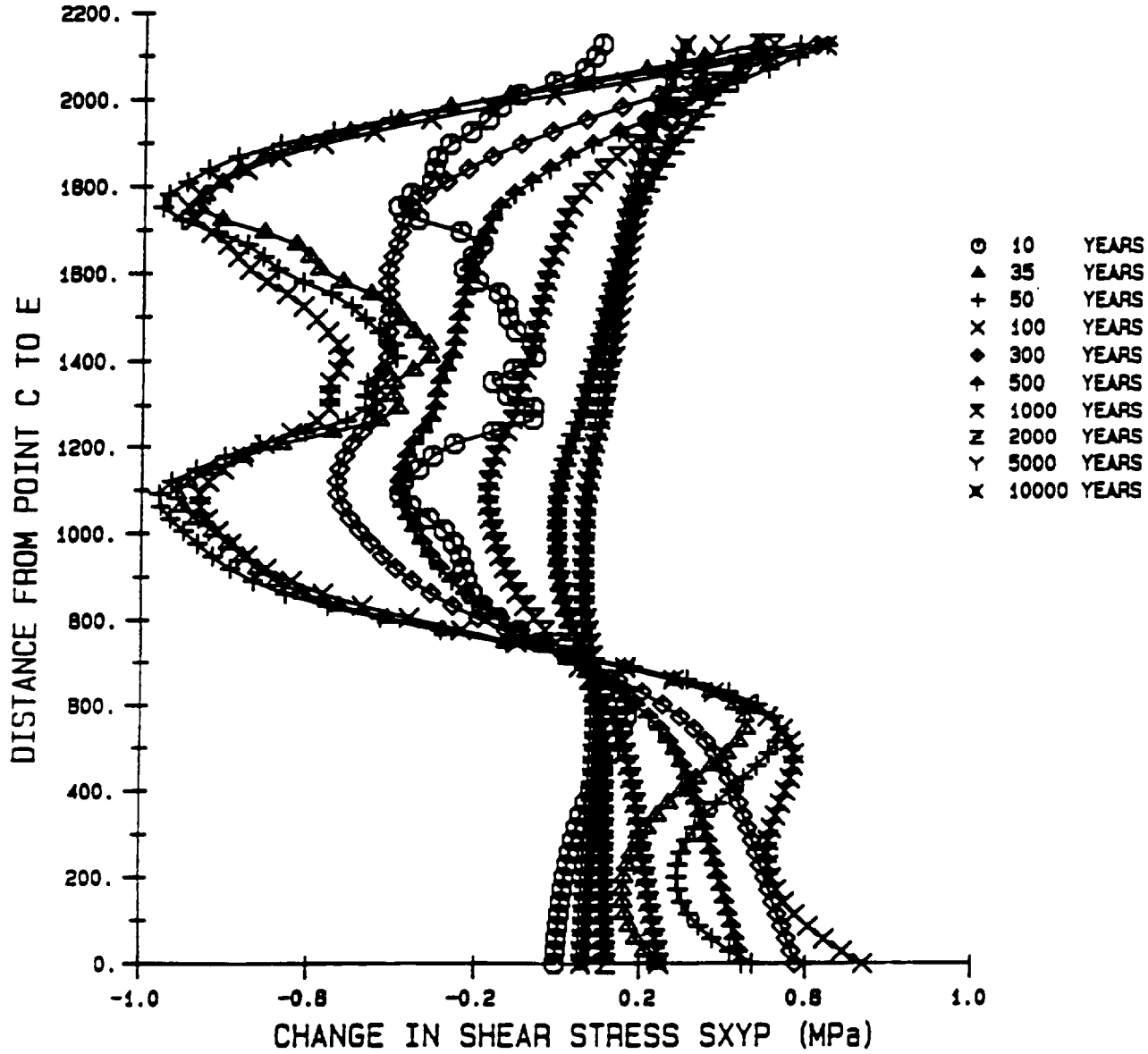

Figure D-10. Drift CE: Changes in Shear Stress $\sigma_{x'y'}$ for 10 to 10,000 Years After Waste Emplacement Begins. This Component of Shear Stress Acts Simultaneously on the Two Drift Springlines, the Drift Crown and the Drift Floor.

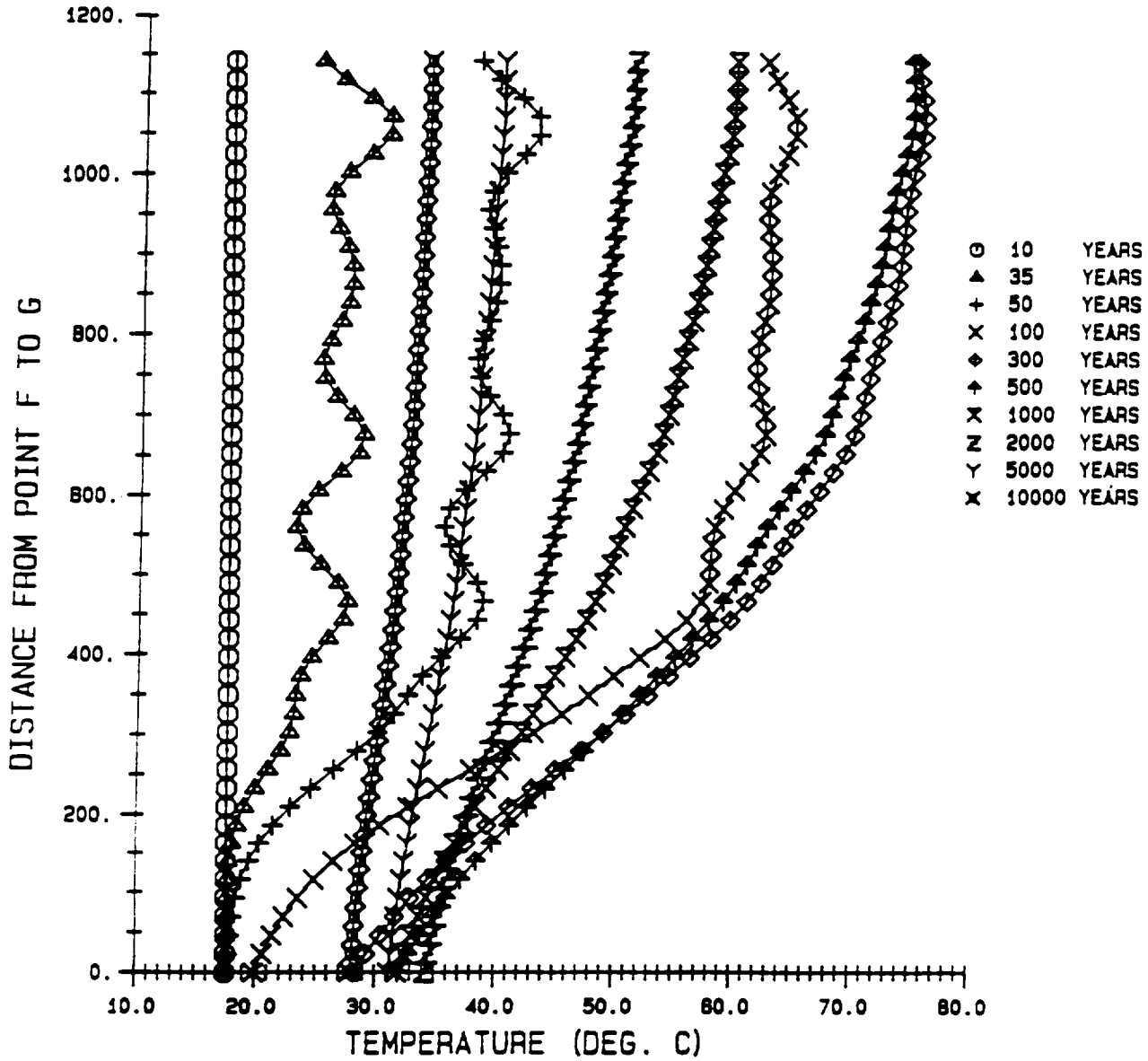

Figure D-11. Drift F'G': Temperature Histories for 10 to 10,000 Years After Waste Emplacement Begins

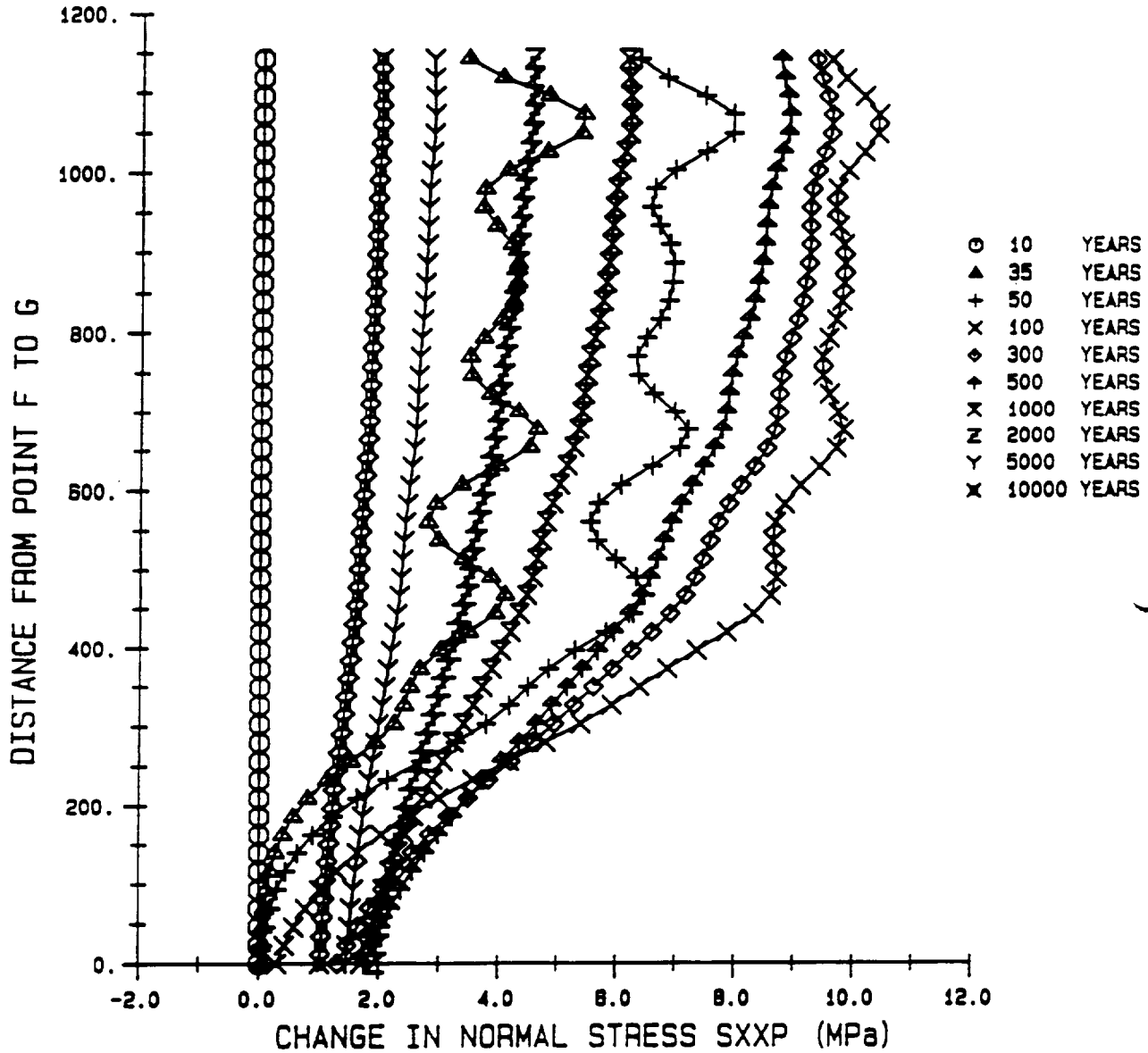

Figure D-12. Drift F'G': Changes in Horizontal Normal Stress $\sigma_{x'x'}$ Acting on the Drift Springline for 10 to 10,000 Years After Waste Emplacement Begins

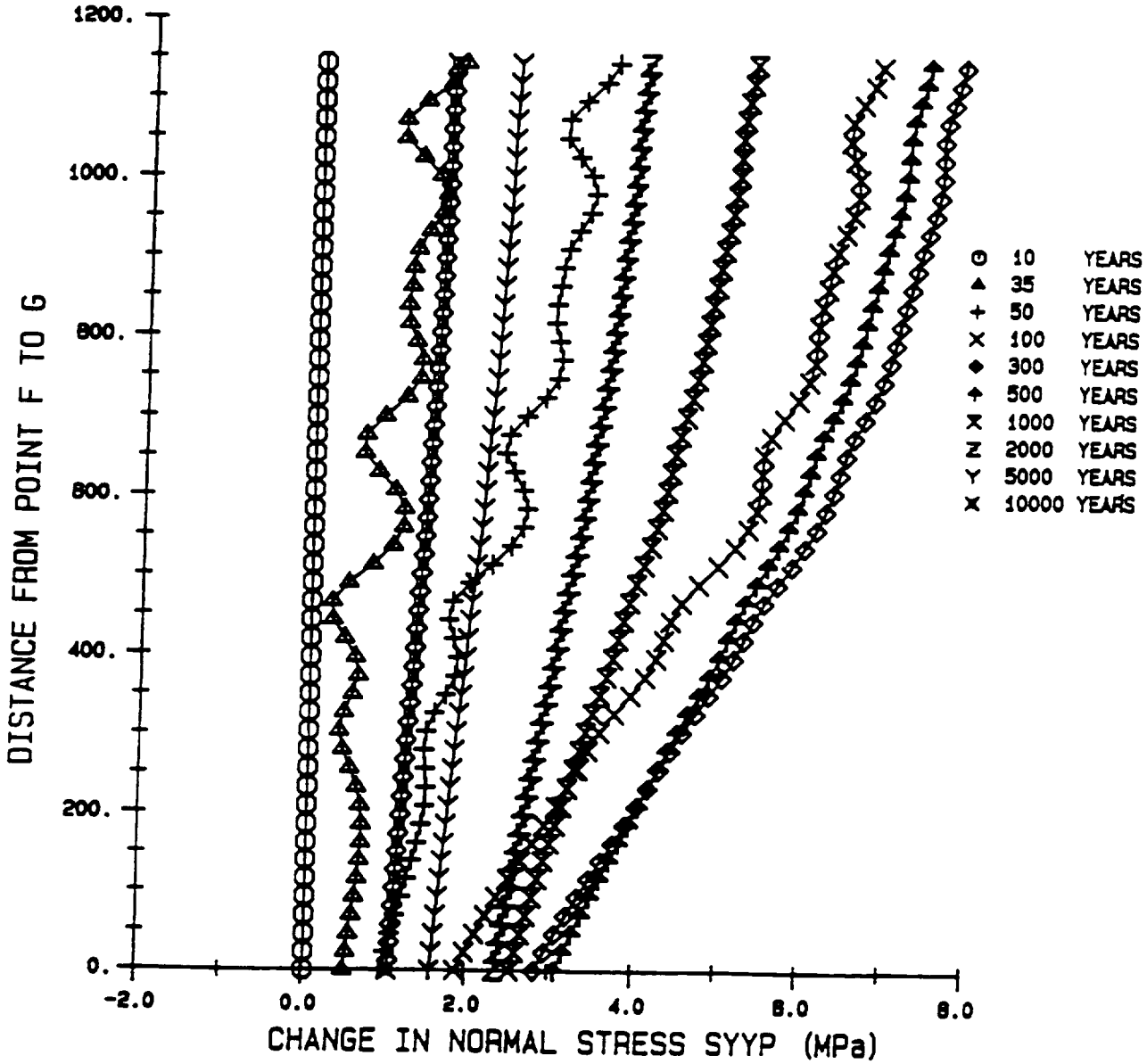

Figure D-13. Drift F'G': Changes in Horizontal Normal Stress $\sigma_{y'y'}$ Acting Along the Drift Axis for 10 to 10,000 Years After Waste Emplacement Begins

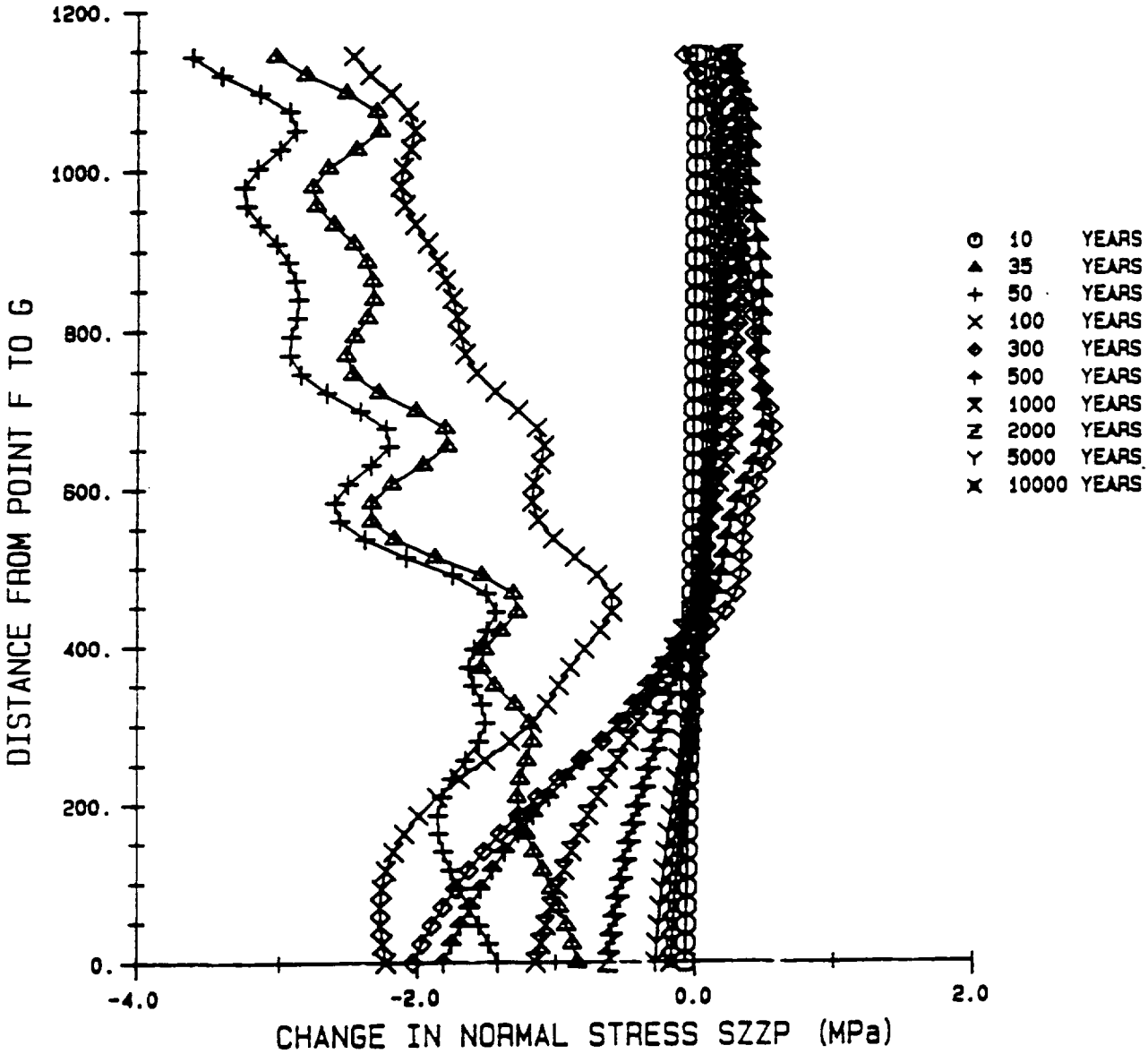

Figure D-14. Drift F'G': Changes in Vertical Normal Stress $\sigma_{z'z'}$ Acting on the Drift Crown for 10 to 10,000 Years After Waste Emplacement Begins

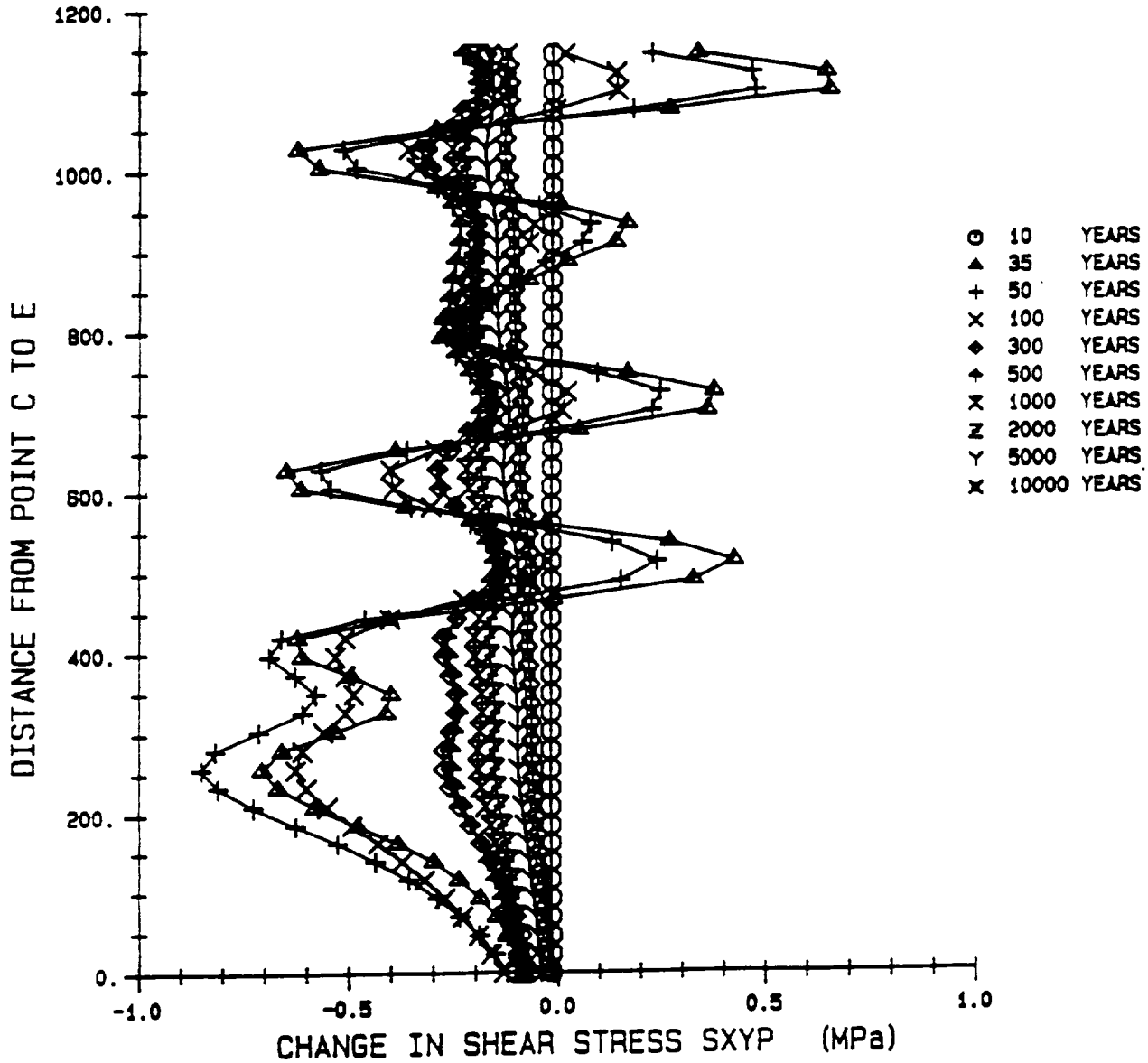

Figure D-15. Drift F'G': Changes in Shear Stress $\sigma_{x'y'}$ for 10 to 10,000 Years After Waste Emplacement Begins. This Component of Shear Stress Acts Simultaneously on the Two Drift Springlines, the Drift Crown and the Drift Floor.

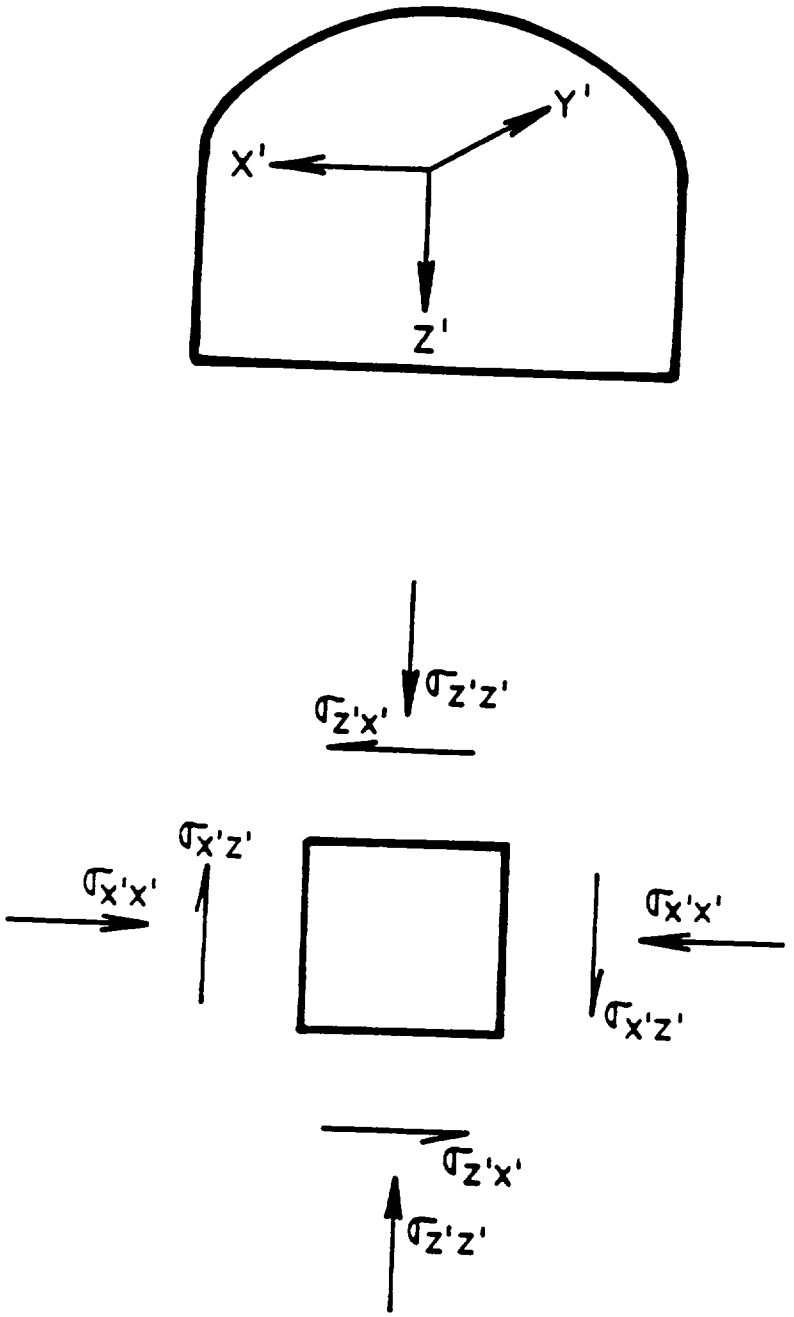

Figure D-16. Local Coordinate System x′-y′-z′ for Each Drift, and Stress Sign Conventions for Each Drift

TITLE I DESIGN SUMMARY REPORT
REVISION 1
DRAFT H
VOLUME 5, APPENDIX

5.9 "Technical Letter Memorandum RSI(ALO)-0037"

NOTE: This document is valid for the methodology only as it pertains to the Reference Design Study.

RE/SPEC Inc.
Rapid City, South Dakota • Albuquerque, New Mexico

Technical Letter Memorandum RSI(ALO)-0037

To: Dr. E. S. Hertel, Jr.
Division 6314
Sandia National Laboratories
Albuquerque, NM 87185

cc: Brian L. Ehgartner
RSI135TR3.2.1

From: David K. Parrish
Terje Brandshaug

Date: November 30, 1988

Subject: Estimates of Expected Values and Ranges of Temperature, Stress, and Strain Along the Exploratory Shaft at the Yucca Mountain Project.

1 Introduction

1.1 Background

Two exploratory shafts (ES-1 and ES-2) are planned for the Exploratory Shaft Facility (ESF) at the proposed nuclear waste repository at Yucca Mountain, Nevada. The shafts will have a two-stage service life. First, they will provide access, ventilation, utility support, and emergency egress from the underground test areas during site characterization. Second, pending results of site characterization, the shafts will be converted to support repository operations until repository closure. Consequently, the shafts must be designed for the thermal/mechanical changes near the repository during the operational period of the repository.

A data base of expected responses of the repository region was developed by Sandia National Laboratories [Brandshaug, in prep.] for the purpose of estimating the average response of the repository region. The study also developed estimates of the uncertainties in calculating the average response. The uncertainties were

3824 Jet Drive, P.O. Box 725, Rapid City, South Dakota 57709 • (605) 394-6400 • TLX 3791625 RESPEC • FAX 605-394-6456
3815 Eubank NE, P.O. Box 14984, Albuquerque, New Mexico 87191 • (505) 293-2000

reported as ranges of expected responses. The data base contains the values and ranges of the parameters of interest in a region extending several kilometers around the repository.

1.2 Objective

The objective of this study was to provide estimates of the expected values and expected variations of the dependent variables (temperature, stress, and strain states) in the vicinity of ES-1 during the first 100 years of the operation of a repository. The baseline case assumed an initial areal power density (APD) of 57 kW/acre. Results were to be extracted from vertical profiles through the vertical cross section used by Brandshaug [in prep.]. Data from elevations of particular interest, that is, the upper demonstration breakout room, the main test level, and a lower level, were tabulated. Brandshaug's thermal/mechanical calculations provide temperature, stress, and strain magnitudes over the entire repository region, and at several discrete times selected between the time of emplacement of heat-generating waste and 50,000 years after the beginning of heat generation. Two times of particular interest to the design of the ESF were extracted for this report. Those times were prior to the emplacement of heat-generating waste (initial conditions) and 100 years after heat generation begins.

1.3 Scope

The data presented in this report were taken from a data base developed during a sensitivity study [Brandshaug, in prep.] of the thermomechanical response of the repository region. The sensitivity study used a two-dimensional (plane strain) elastic model of the repository region. In that study, several thermal and mechanical parameters (the independent variables such as thermal conductivity and Young's Modulus) were varied one at a time in a series of independent calculations.

Average values for each of the independent variables were provided by Sandia National Laboratories [MacDougall, 1987]. Ranges for each of the independent variables were expressed as a percent variation from each of the average values (Table 1). The percentages were based on engineering judgment in concurrence with Sandia National Laboratories [Mansure, 1986]. Engineering judgment was also used to determine whether to vary the magnitudes in a positive (increase) or negative (decrease) sense for the purposes of studying the sensitivity. In most cases, values were chosen to produce either an increase in the temperatures or an increase in the compressive stress magnitudes. The dependent variables (temperature, stress and strain) were calculated and compared with a baseline case to assess the sensitivity of these variables to changes in the independent variables. The sensitivity to in situ stress was also analyzed. The results of those analyses are discussed in Section 3.1.

The baseline case for the sensitivity study assumed the initial APD was 80

Table 1

Average Values and Ranges of Thermal/Mechanical Parameters

Parameter	Average Value	Range
Thermal Conductivity	avg	± 20 percent
Heat Capacity	avg	± 10 percent
Thermal Expansion	avg	± 20 percent
Elastic Constants		
Young's Modulus	avg	± 50 percent
Poisson's Ratio	avg	± 50 percent
Mass Density	avg	± 5 percent

Average values are specified for each thermal/mechanical unit in the far-field model used in the sensitivity study. The parameter value of each unit was changed simultaneously by the same percentage to determine the sensitivity to each varied parameter.

kW/acre of repository area. Since the objective of this study was to determine the expected values and ranges for the case when the APD was 57 kW/acre, the values calculated in the sensitivity study were modified to obtain a revised baseline case.

The planned location of ES-1 is approximately 300 m from the representative cross section (C-C′ in Figure 1) used by Brandshaug (in prep.) for the thermal/mechanical analyses. The shaft location is 180 m from the nearest waste disposal panel (Figure 1). Two profiles within cross section CC′ were selected to provide an understanding of the environment near ES-1. One profile is along the projection of ES-1 onto section CC′ (Figure 2). The values along this profile are likely to be much higher than those at the actual shaft location, because the projection of the exploratory shaft onto the plane of the thermomechanical analysis neglects the thermal insulation provided by the 180 m between the shaft and the nearest waste disposal panel. The stress field is also likely to be perturbed less at a distance of 180 m from the heat-generating region. Consequently, a second profile, located 180 m from the east edge of the heat-generating region in the two-dimensional model was selected to provide a better understanding of the environment away from the heated region.

Neither profile from a two-dimensional representation of the repository includes the three-dimensional effects that should be expected near the ESF configuration. Comparison of the calculated values along these profiles also neglects the differences in topography and stratigraphy at the two locations.

The mean values and ranges presented in this report represent only the variations in the calculated dependent variables that are caused by variations in the

independent variables considered in Brandshaug's (in prep.) sensitivity study. Additional uncertainty in the expected values of temperature, stress, and strain may result from factors that were not considered in the sensitivity study.

2 Statistical Approach

2.1 Approximate Mean and Variance

The objective of this study was to determine the expected values for each of the dependent variables, as well as the expected variations. Standard approaches are available for determining the approximate mean and variance of calculated functions. The formulation that follows is taken from Ang and Tang (1975).

Each quantity of interest is considered to be a function of several random variables:

$$Y = g\,(X_1, X_2, \ldots X_n)\ , \tag{1}$$

where

Y = temperature, stress or strain (dependent variables)
X_i = thermal conductivity, specific heat capacity, Poisson's ratio, Young's modulus, etc. (independent variables)

Assuming the parameters, X_i are uncorrelated, *first-order* approximations of the mean value, $E(Y)$, and variance, $\mathrm{Var}(Y)$, of the dependent variable, Y, in terms of the mean values, μ_{X_i}, and the variances, $\mathrm{Var}(X_i)$, of the parameters, X_i, are given:

$$E(Y) \simeq g\,(\mu_{X_1}, \mu_{X_2}, \ldots \mu_{X_n})\ . \tag{2}$$

$$\mathrm{Var}(Y) \simeq \sum_{i=1}^{n} \mathrm{Var}(X_i) \left(\frac{\partial g}{\partial X_i}\right)^2\ . \tag{3}$$

If the function $g(X_i)$ (Equation 1) is approximately linear for the entire range of X_i, Equations 2 and 3 are good approximations of the exact mean and variance (Ang and Tang, 1975). If the variances of X_i are small, the approximation is good even if the function is nonlinear.

2.2 Analogous Expressions

The calculated temperatures, stresses, and strains near the center of the heat-generating region in the sensitivity study (Brandshaug, in prep.) changed in approximately direct proportion to changes in the independently varied parameters. Therefore, the approximate expressions (Equations 2 and 3) provide good estimates for the mean values and variances of the temperatures, stresses and strains calculated in the sensitivity study. The average values in Table 1 provide good estimates of the mean values, μ_{X_i}, required for Equation 2. However, the relationship between the ranges in Table 1 and the variances $\mathrm{Var}(X_i)$ required for Equation 3 were not established at the time of the sensitivity study. Hence the functional relationships presented by Ang and Tang (1975) (Equations 2 and 3) were adapted to obtain expressions analogous to the mean, variance, and standard deviation. The analogous parameters defined for this study are:

Statistical Parameter	Analogous Parameter
Mean Value, μ	Expected Value, E
Variance, Var	Dispersion, Disp
Standard Deviation, $\sigma = \sqrt{\mathrm{Var}}$	Expected Deviation, EDev

Expected Value. The variables Y (Equation 1) were the temperatures, stresses, and strains that were calculated using the finite element method as a part of the sensitivity study. The average values (Table 1) were the expected values of the independently varied parameters, X_i. The expected value, $E(Y)$, for each dependent variable was obtained from the calculation that used

- the average values $E(X_i)$ for the independently varied parameters, and
- 57 kW/acre as the APD.

The expected value determined in this manner is given by Equation 2 written in condensed form:

$$E(Y) = g\left(E(X_i)\right) . \tag{4}$$

Dispersion and Expected Deviation. Equation 3 was adapted for this study in order to provide a measure of the uncertainty that is analogous to the variance in the parameters Y. The adaptation was required because, at the time of the sensitivity study, the variances in X_i that are required in Equation 3 were not available. The ranges in the independent variables, X_i, were based on engineering judgement, and the following assumptions and rationale were used to adapt Equation 3 for this study.

Assume each of the independent variables, X_i, has a certain distribution, and the distributions are characterized by the mean values μ_{X_i} and some standard deviation σ_{X_i}. The ranges of the dependent values, $R(X_i)$, used in the sensitivity study represent some multiple, k, of the standard deviation in X_i:

$$R(X_i) = k\sigma_{X_i} . \tag{5}$$

Expressing the variance of X_i as a function of $R(X_i)$ leads to a definition of the *dispersion* that is analogous to the variance:

$$\mathrm{Var}(X_i) = (R(X_i)/k)^2 = \mathrm{Disp}(X_i)/k^2.$$

In other words, the dispersion is a multiple of the variance:

$$\mathrm{Disp}(X_i) = k^2\mathrm{Var}(X_i) . \tag{6}$$

Assuming the multiple, k, is the same for all parameters X_i, the variance of the dependent variable, Y, can be written as:

$$\mathrm{Var}(Y) \simeq \sum_{i=1}^{n}\mathrm{Var}(X_i)\left(\frac{\partial g}{\partial X_i}\right)^2 , \tag{7}$$

$$\simeq \sum_{i=1}^{n}\frac{\mathrm{Disp}(X_i)}{k^2}\left(\frac{\partial g}{\partial X_i}\right)^2 . \tag{8}$$

This assumption seems reasonable because usual engineering judgment leads to the exclusion of extreme values in the sample data. It is likely that the judgment used to determine the bounds to be used in the sensitivity study would result in similar variations about the average value for each parameter.

The dispersion of the dependent variables, Y, is defined in the same form as the dispersion of independent variable X_i (Equation 6), i.e:

$$\mathrm{Disp}(Y) = k^2\mathrm{Var}(Y) \tag{9}$$

$$\simeq \sum_{i=1}^{n}\mathrm{Disp}(X_i)\left(\frac{\partial g}{\partial X_i}\right)^2 . \tag{10}$$

The term *Expected Deviation* (EDev Y) will be used for the square root of Equation 10:

$$\mathrm{EDev}(Y) = \sqrt{\sum_{i=1}^{n} \mathrm{Disp}(X_i) \left(\frac{\partial g}{\partial X_i}\right)^2} . \tag{11}$$

EDev(Y) is the expected range of the variable Y due to the variations in *all* the independent variables, X_i.

2.3 Scaling for Areal Power Density

The design of the ESF requires estimates of the expected values, $E(Y)$, of the three thermal/mechanical variables of interest—temperature, stress and strain—using a baseline case of 57 kW/acre APD. The baseline APD used in the sensitivity study (Brandshaug, in prep.) was 80 kW/acre. The effect of the independently varied parameters on a baseline case using 57 kW/acre as the APD was obtained by scaling the results of the 80 kW/acre case. This scaling was justified because the heat transfer calculations were based on linear heat transfer phenomena. None of the independently varied parameters used in the sensitivity study were assumed to be functionally dependent on the temperature, stress, or strain. All boundary conditions, except one, were held constant. Only the convective boundary condition at the ground surface of the heat transfer model might have affected the validity of scaling the results. The influence of the convective boundary is principally to maintain a constant temperature at the ground surface. Consequently, the temperatures at the surface of the model were very weakly dependent on temperature in the modeled region. The mechanical responses of interest, stress and strain, also varied linearly with the APD because a linear elastic constitutive model was used. Since the dependent variables of interest were nearly linear functions of the APD, the expected value and expected range were also linear functions of the APD. Consequently, a scale factor, SF, was based on the ratio of the changes in the dependent variables for the two APDs:

$$SF = \frac{Y_{57}\,(E(X_i), t) - Y_{57}\,(E(X_i), 0)}{Y_{80}\,(E(X_i), t) - Y_{80}\,(E(X_i), 0)} \tag{12}$$

where $Y(E(X_i), t)$ represents the value of a dependent variable (e.g., temperature, stress, or strain) calculated at time, t, using the mean values of the independently varied parameters in the sensitivity analysis. The subscripts 57 and 80 indicate the APD (57 kW/acre or 80 kW/acre) used in the calculation. The initial values of the dependent variable, Y, do not vary with the APD, that is, $Y_{80}(E(X_i), 0)$ is equal to $Y_{57}(E(X_i), 0)$. Because the temperature, stress, and strain varied with space and time, the scale factor, SF, varied with location in the modeled region and with time in the heating history.

2.4 Expected Value and Expected Deviation of Thermal/Mechanical Parameters

Bounding values, $B(X_i)$, were used to represent the extreme variation of each of the independent variables, X_i. $B(X_i)$ can be expressed in terms of the range, $R(X_i)$, as follows:

$$B(X_i) = E(X_i) - R(X_i) . \tag{13}$$

Discrete values of the dependent and independent variables can be used to approximate the partial derivative of the function $Y = g(X_i)$ in Equation 10 when the scale factor, SF, is applied. The dispersion of each dependent variable can be expressed as:

$$\text{Disp } Y_{57}(X_i, t) \simeq (SF)^2 \sum_{i=1}^{n} \left(\frac{Y_{80}(B(X_i), t) - Y_{80}(E(X_i), t)}{R(X_i)} \right)^2 \text{Disp } X_i . \tag{14}$$

where $B(X_i)$ indicates the bounding value used for the ith parameter in the sensitivity study, and $R(X_i)$ is the range of each of the parameters (Table 1).

The expected deviation of each parameter, Y, is the square root of Equation 14. After expanding Disp X_i and simplifying:

$$\text{EDev } Y_{57}(X_i, t) \simeq (SF) \sqrt{\sum_{i=1}^{n} \{ Y_{80}(B(X_i), t) - Y_{80}(E(X_i), t) \}^2} . \tag{15}$$

The initial conditions ($Y(B(X_i), 0)$) in the mechanical models differed by small magnitudes from $Y(E(X_i), 0)$ in cases where the elastic moduli or density were varied in the sensitivity study. The differences result from the fact that different elastic moduli and densities lead to slightly different equilibrium stress states as the starting point for each calculation. The effect of these differing initial conditions can be examined by rewriting the dispersion (Equation 14) as

$$\begin{aligned} \text{Disp } Y_{57}(X_i, t)) &\simeq (SF)^2 \sum_{i=1}^{n} \{ Y_{80}(B(X_i), t) - Y_{80}(B(X_i), 0) - Y_{80}(B(X_i), 0) \} \\ &- \{ Y_{80}(E(X_i), t) - Y_{80}(E(X_i), 0) - Y_{80}(E(X_i), 0) \}^2 . \qquad (16) \\ &\simeq (SF)^2 \sum_{i=1}^{n} \{ \Delta Y_{80}(B(X_i), t) - \Delta Y_{80}(E(X_i), t) \\ &- Y_{80}(B(X_i), 0) - Y_{80}(E(X_i), 0) \}^2 . \qquad (17) \end{aligned}$$

where $\Delta Y_{80}(X_i, t)$ denotes the change in Y that is attributable only to the repository heating after time, t. If the initial conditions resulting from initializing the finite element calculation using parameters $B[X_i]$ and $E[X_i]$ are identical, then $Y_{80}(B[X_i], 0)$ and $Y_{80}(E[X_i], 0)$ are equal, and the dispersion of Y is attributable only to the parameter change from $E[X_i]$ to $B[X_i]$. When $Y_{80}(B[X_i], 0)$ and $Y_{80}(E[X_i], 0)$ are unequal the difference in initial conditions is incorporated in the dispersion, as shown in Equation 17.

3 Results

Section 3.1 discusses the effects of varying the in situ stress state. A comparison is made of the ranges obtained by varying the in situ stress state and the ranges obtained by varying the material parameters.

The results are presented in two tables showing the expected values of temperatures, stress components, and strain components, as well as estimates of the expected deviations (Equation 15) in these variables above and below the expected values. Table 2 presents the results along projections of the Exploratory Shaft onto the section of the analysis. The values in this table are likely to be much higher than those at the actual shaft location because the projection of the exploratory shaft on the plane of the thermomechanical analysis models a shaft very close to the waste storage rooms. In this position, the shaft would be subject to maximum temperatures. In fact, the exploratory shaft will be approximately 180 m (600 ft) from the nearest waste panel. An estimate of the effects of waste panels at a distance of 180 m was obtained by calculating the values and ranges at a location 180 m from the east edge of the repository in the two-dimensional model (Table 3).

Data along the entire length of each profile are provided in graphical form in Figures 4 through 29. Each figure shows the expected value as a solid line. The expected ranges ($E[Y] \pm \mathrm{EDev}[Y]$) are shown as dashed curves on either side of the solid curve representing the expected value.

3.1 In Situ Stress

Two initial stress states were used by Brandshaug (in prep.) to study the sensitivity of the dependent variables, stress and strain, to the initial stress state. In the baseline case, the stress was initialized by simply calculating the stress at every point in the modeled region resulting from the weight of the overburden. The bounding case was initialized so that the horizontal stress was approximately equal to the vertical stress throughout the model. The idealization was only approximate because some deviations from the idealization were required to establish the initial equilibrium stress state near the irregular free surface at the top of the modeled region and near discontinuous changes in material properties within the modeled

region. The variation in horizontal stress resulting from this range in initial stress conditions (Figure 3) illustrates the conclusion drawn by Brandshaug in prep. that the influence of the in situ stress state is greater than the combined the influences of all the other parameters. For example, the variation in initial stress caused a factor of two increase in the horizontal stress at the repository elevation. The variations resulting from the other parameters were insignificant compared to the variations resulting from variations in initial in-situ stress.

In order to illustrate the effects of the other parameters in Table 1, the effects of in situ stress were excluded from the statistical calculations discussed in Section 2. The following discussion applies only to parameter variations using the baseline calculation in which the initial stress state resulted from gravitational loading.

3.2 Profile Along ES-1 Projection

At a time 100 years after the beginning of heat generation, the maximum temperatures along the projection of ES-1 were at the main level (Table 2). The thermal expansion associated with these high temperatures resulted in correspondingly high horizontal stresses at the main level. The horizontal stresses parallel (x component) and perpendicular (z component) to the plane of analysis increased by nearly one order of magnitude. The vertical stresses (y component) near the heat-generating region changed insignificantly. The thermal strains in the heat-generating region indicate expansion (positive strains) on the order of 0.1 percent in the vertical direction and 0.02 percent in the horizontal (x direction). Plane strain analyses restrict all deformation perpendicular to the plane of analysis, so the z-component of strains in Table 2 are zero.

The expected deviations in all dependent variables increased as the expected values increased. The greatest perturbation in temperature was at the main level, and the expected deviation at that level was plus or minus 10 percent of the expected value. At the upper and lower levels, where smaller perturbations were calculated, the expected deviations were plus or minus 4 percent. The large perturbation in the stress field near the main level was accompanied by larger deviations in the stress level. The expected deviations in the horizontal stress at the main level were plus or minus 40 to 50 percent of the expected value.

3.3 Profile Along Location 180 m From Heat-Generating Region

Temperature and stress changes are much lower at a location 180 m from the repository edge. In fact, the temperatures are hardly perturbed in the 100 year period under consideration. The most significant effect of repository heating at this location is a doubling of the horizontal stress at the main level. The expected deviation in the horizontal stress was plus or minus 30 percent. The vertical stress changed insignificantly at the 100-year calculation time. Compressive horizontal

strains of approximately 0.02 percent were calculated at the 180-m distance. This is in contrast to extensile strains of approximately the same magnitude along the projection of ES-1. Vertical strains at the 180-m distance were extensile, but reduced in magnitude relative to the location interior to the heat-generating region.

4 Conclusions

The objective of this study was to provide estimates of the expected values and variations of temperature, stress, and strain states in the vicinity of the ES-1 during the first 100 years of the operation of a repository filled with radioactive waste at an initial areal power density (APD) of 57 kW/acre. Results were extracted from vertical profiles through the vertical cross section used by Brandshaug (in prep.).

The expected value and expected deviation were calculated using expressions analogous to expressions for the mean and standard deviations. The first-order approximations for the mean and variance are obtained from Ang and Tang (1975).

The baseline case in the sensitivity study (Brandshaug, in prep.) used 80 kW/acre as the initial APD. Since the design of the ESF required the expected values and deviations of the dependent variables for an APD of 57 kW/acre, a technique for scaling the results of the sensitivity study was developed. The scaling is justified because the calculations were based on linear heat transfer and linear elastic constitutive relations.

Results from two profiles are presented. One profile is simply the projection of ES-1 onto the cross section used for thermal/mechanical analyses in the sensitivity study. A second profile, located 180 m from the edge of the heat-generating region in the analysis cross section, was selected to obtain an estimate of the effects of waste panels at a distance of 180 m. Both profiles neglect three dimensional effects that should be expected near a shaft located within the repository area and 180 m from the nearest waste storage panel. Nevertheless, these profiles provide the best basis for estimating the environment near ES-1 based on the two-dimensional responses that were available. Temperatures, stresses, and strains calculated along a projection of ES-1 are likely to be greater than should be expected at a location 180 m from the nearest waste storage panel. The profile located 180 m from the heat-generating region in the two-dimensional model is likely to be more representative of conditions near ES-1.

Calculations of the temperatures after 100 years of heat generation indicate that the temperatures 180 m from the edge of the heat-generating region are hardly perturbed. The most significant effect of repository heating at the 180-m location is a doubling of the horizontal stress on the main level. The expected deviation in the horizontal stress on the main level is plus or minus 30 percent.

References

Ang, A. H-S. and W. H. Tang, 1975. *Probability Concepts in Engineering Planning and Design*, Volume I, Basic Principles, John Wiley & Sons, Inc., New York, NY.

Brandshaug, T., in preparation. *A Sensitivity Study of the Thermomechanical Far-Field Model of Yucca Mountain*, SAND87-7079, RSI-0318, prepared by RE/SPEC Inc., Rapid City, SD, for Sandia National Laboratories, Albuquerque, NM.

MacDougall, H.R., L.W. Scully, and J. R. Tillerson, compilers, 1987. SAND84-2641, *Site Characterization Plan Conceptual Design Report*, Volume 4, Appendix O.

Mansure, A. J., 1986. Memorandum from A. J. Mansure, Sandia National Laboratories, to S. W. Key, RE/SPEC Inc., regarding Request for Analytical Support for Far-field Thermal Loading Analysis - PDM 75-12462-001 QII, February 15.

Table 2

Expected Values (Expected Deviations, see Equation 15) of Parameters at the Projection of ES-1 on Section CC′

	Upper Level Elev. = 1076 m Value (± Deviation)	Main Level Elev. = 950 m Value (± Deviation)	Lower Level Elev. = 843 m Value (± Deviation)	Units
Temperature				
Initial	22.74 (± 0)	25.56 (± 0)	27.63 (± 0)	°C
100 yr	31.38 (± 3.6)	118.90 (± 11.7)	40.93 (± 4.1)	°C
Horizontal Stress[1]				
Initial	− 1.28 (± 0.2)	− 2.44 (± 0.4)	− 2.34 (± 0.5)	MPa
100 yr	− 0.61 (± 0.3)	− 17.84 (± 7.6)	− 2.38 (± 0.6)	MPa
Vertical Stress[1]				
Initial	− 4.78 (± 0.2)	− 7.58 (± 0.4)	− 9.90 (± 0.5)	MPa
100 yr	− 4.91 (± 0.2)	− 7.89 (± 0.3)	− 10.09 (± 0.4)	MPa
Out-of-Plane Stress[1]				
Initial	− 0.97 (± 0.2)	− 2.01 (± 0.5)	− 2.27 (± 0.5)	MPa
100 yr	− 1.62 (± 0.7)	− 20.08 (± 9.0)	− 3.89 (± 0.7)	MPa
Shear Stress				
Initial	0.12 (± 0)[2]	0.32 (± 0)[2]	0.37 (± 0)[2]	MPa
100 yr	− 0.02 (± 0.1)	1.66 (± 0.7)	0.56 (± 0.1)	MPa
Horizontal Strain				
Initial[3]	0 (± 0)	0 (± 0)	0 (± 0)	1E-6
100 yr	201.28 (± 111.2)	212.90 (± 116.4)	383.71 (± 121.9)	1E-6
Vertical Strain				
Initial[3]	0 (± 0)	0 (± 0)	0 (± 0)	1E-6
100 yr	78.44 (± 88.1)	1412.00 (± 702.7)	311.40 (± 133.4)	1E-6
Out-of-Plane Strain[4]				
Initial[3]	0 (± 0)	0 (± 0)	0 (± 0)	1E-6
100 yr	0 (± 0)	0 (± 0)	0 (± 0)	1E-6
Shear Strain				
Initial[3]	0 (± 0)	0 (± 0)	0 (± 0)	1E-6
100 yr	− 40.18 (± 16.9)	213.10 (± 106.4)	92.65 (± 50.9)	1E-6

[1] Compressive stress is negative

[2] Less than ± 0.005 MPa

[3] Reference Strain = 0

[4] Plane Strain Conditions

Table 3

Expected Values (Expected Deviations, see Equation 15) of Parameters at 180-m Distance From Heat-Generating Region in Section CC′

	Upper Level Elev. = 976 m Value (± Deviation)	Main Level Elev. = 875 m Value (± Deviation)	Lower Level Elev. = 760 m Value (± Deviation)	Units
Temperature				
Initial	23.61 (± 0)	26.60 (± 0)	29.18 (± 0)	°C
100 yr	23.60 (± 0.1)	27.02 (± 0.1)	29.20 (± 0.0)	°C
Horizontal Stress[1]				
Initial	− 1.16 (± 0.3)	− 2.62 (± 0.6)	− 2.13 (± 0.5)	MPa
100 yr	− 2.42 (± 0.8)	− 5.42 (± 1.7)	− 2.50 (± 0.4)	MPa
Vertical Stress[1]				
Initial	− 5.09 (± 0.3)	− 7.49 (± 0.4)	− 10.02 (± 0.5)	MPa
0 yr	− 4.32 (± 0.4)	− 6.79 (± 0.4)	− 9.74 (± 0.4)	MPa
-of-Plane Stress[1]				
Initial	− 1.00 (± 0.3)	− 2.02 (± 0.6)	− 2.07 (± 0.5)	MPa
100 yr	− 1.09 (± 0.2)	− 2.52 (± 0.6)	− 2.08 (± 0.3)	MPa
Shear Stress				
Initial	0.27 (± 0.0)[2]	0.57 (± 0.0)[2]	0.53 (± 0.0)[2]	MPa
100 yr	− 0.17 (± 0.2)	1.00 (± 0.3)	1.16 (± 0.3)	MPa
Horizontal Strain				
Initial[3]	0.00 (± 0.0)	0.00 (± 0.0)	0.00 (± 0.0)	1E-6
100 yr	−179.16 (± 102.4)	−183.35 (± 99.0)	−118.00 (± 59.7)	1E-6
Vertical Strain				
Initial[3]	0.00 (± 0.0)	0.00 (± 0.0)	0.00 (± 0.0)	1E-6
100 yr	130.96 (± 76.8)	94.61 (± 51.5)	100.20 (± 49.7)	1E-6
Out-of-Plane Strain[4]				
Initial[3]	0.00 (± 0.0)	0.00 (± 0.0)	0.00 (± 0.0)	1E-6
100 yr	0.00 (± 0.0)	0.00 (± 0.0)	0.00 (± 0.0)	1E-6
Shear Strain				
Initial[3]	0.00 (± 0.0)	0.00 (± 0.0)	0.00 (± 0.0)	1E-6
100 yr	−135.00 (± 69.1)	68.81 (± 44.1)	422.20 (± 232.8)	1E-6

[1] Compressive stress is negative

[2] Less than ± 0.005 MPa

[3] Reference Strain = 0

[4] Plane Strain Conditions

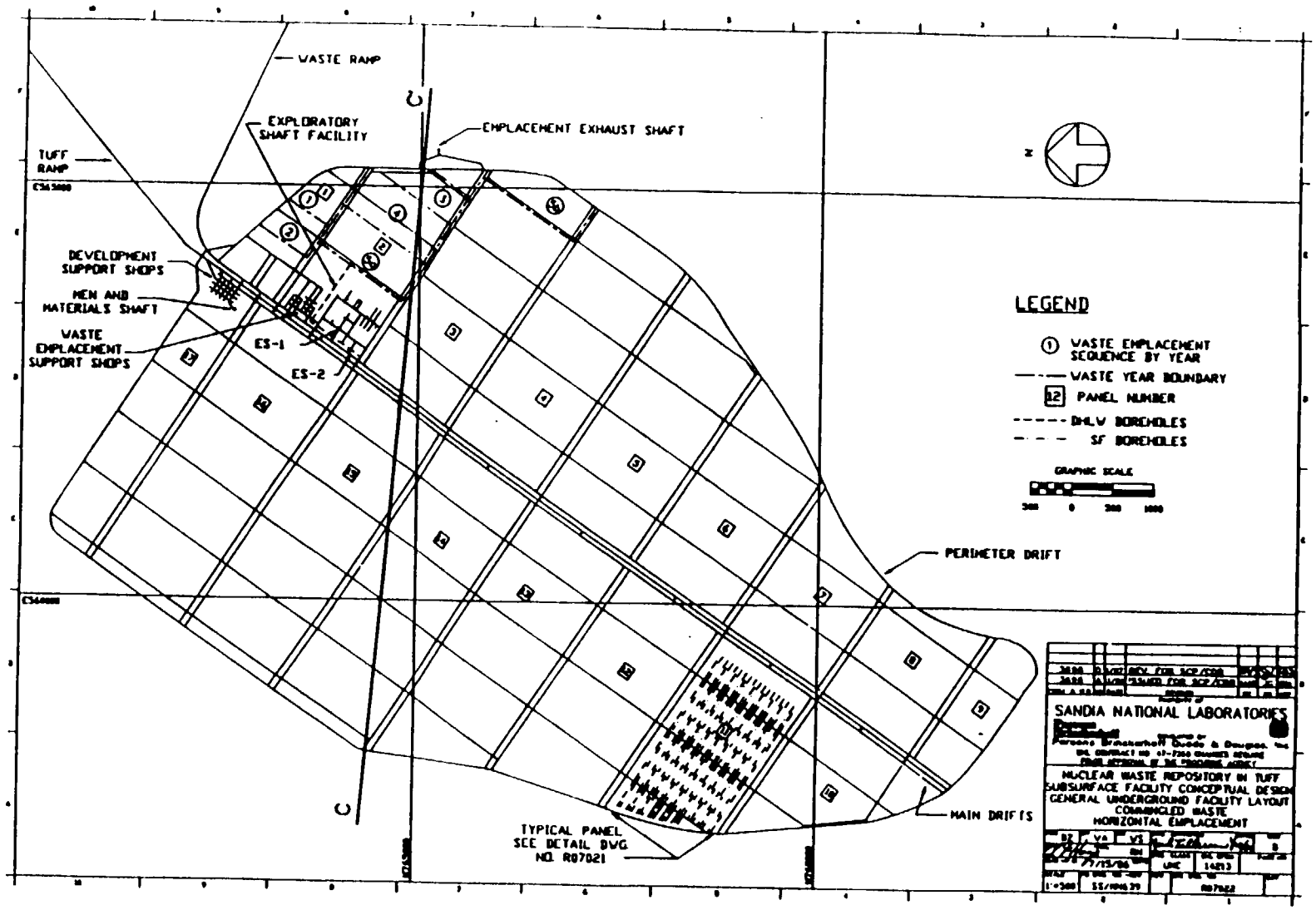

Figure 1. Location of Section CC' Relative to Exploratory Shaft ES-1. Adapted from MacDougall, et al., 1987, Vol. 2 Figure 4-30

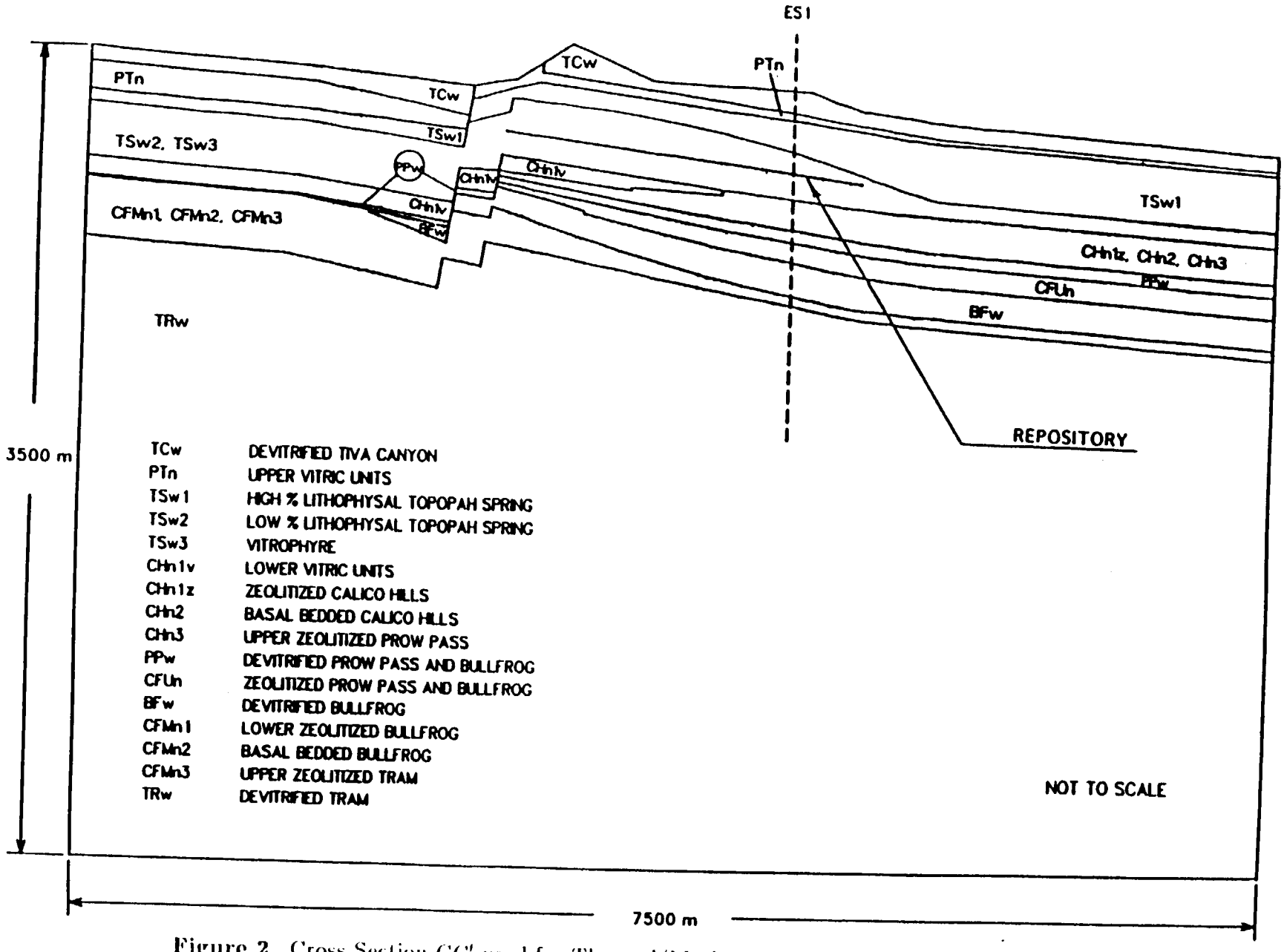

Figure 2. Cross Section CC' used for Thermal/Mechanical Analysis by Brandshaug [in prep.]

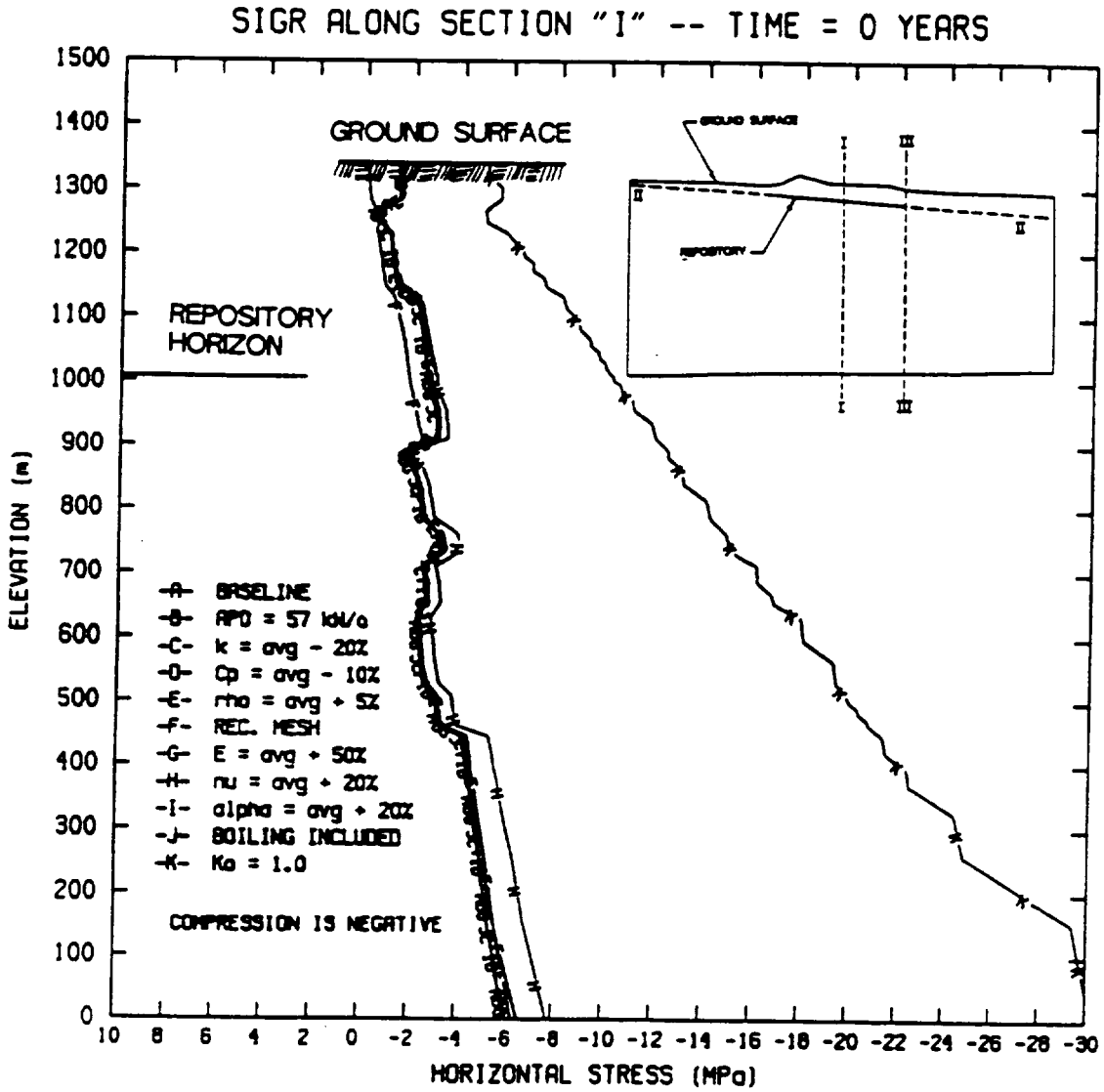

Figure 3. Predicted Horizontal Stress (MPa) Along Section "I" for the Different Cases Investigated (Time = 0)

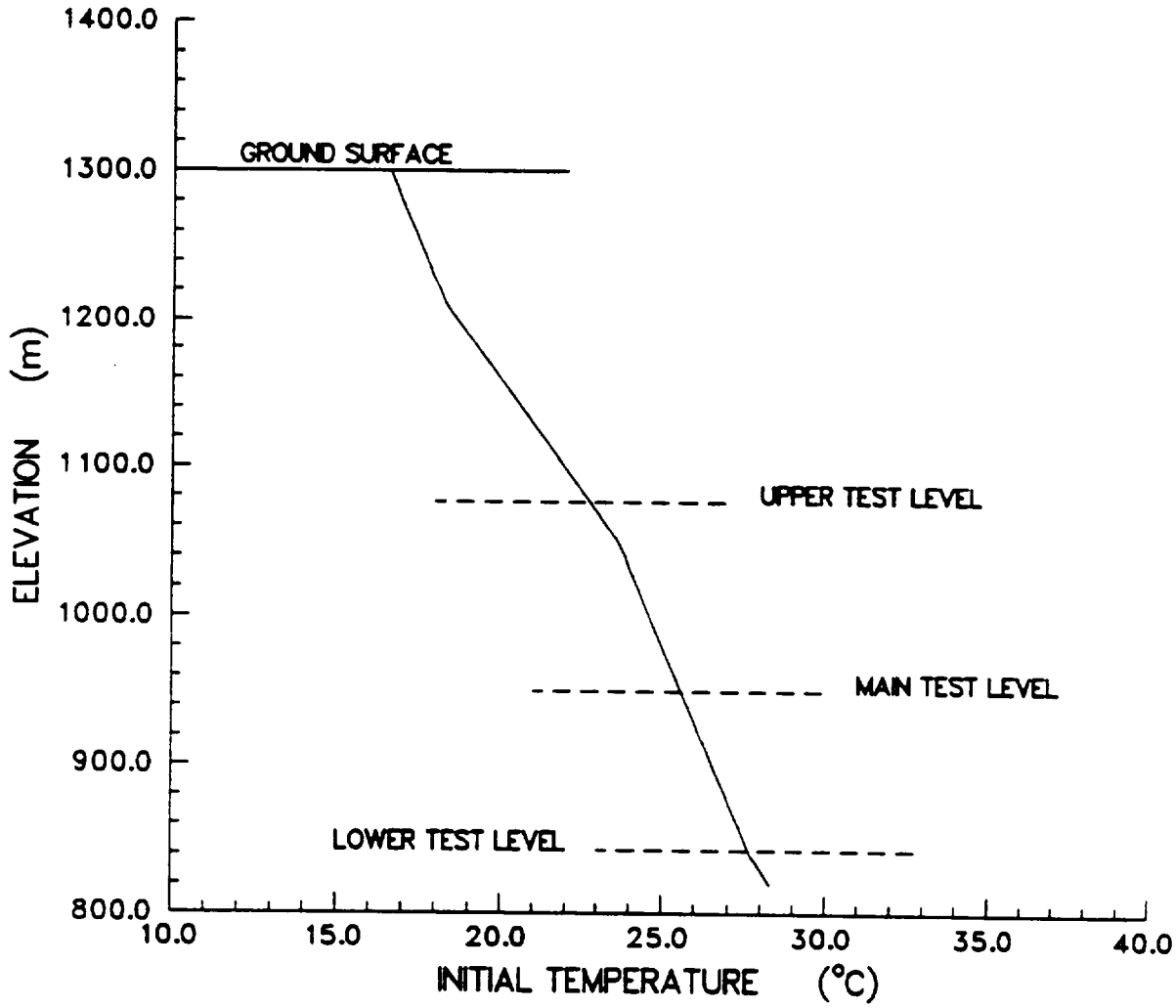

Figure 4. Initial Temperatures at Projection of ES-1 on Section CC′ (Time = 0)

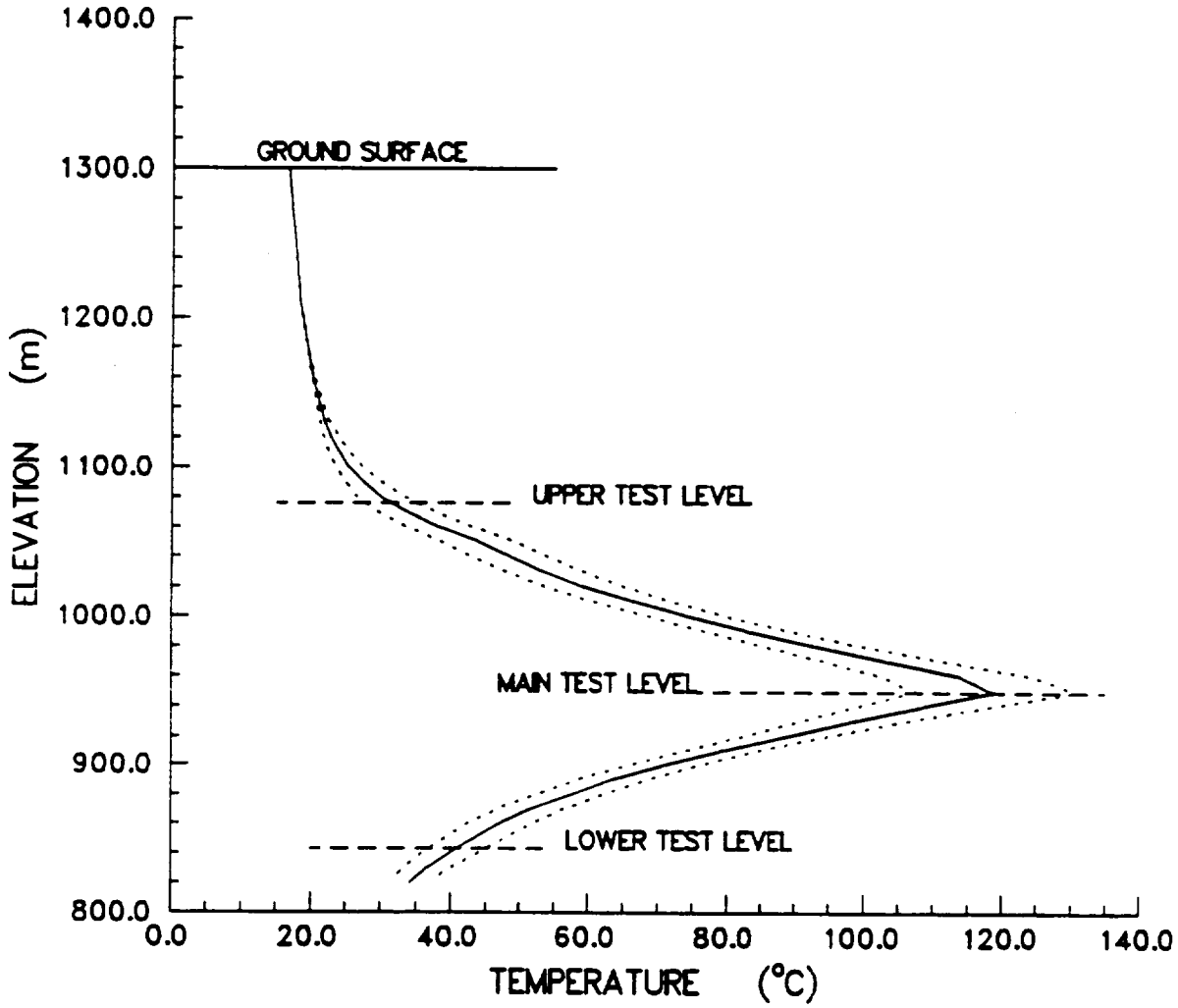

Figure 5. Expected Temperature (Solid line) and Expected Deviations (Dotted Lines. Equation 15) in Temperature at Projection of ES-1 on Section CC′ (Time = 100 years)

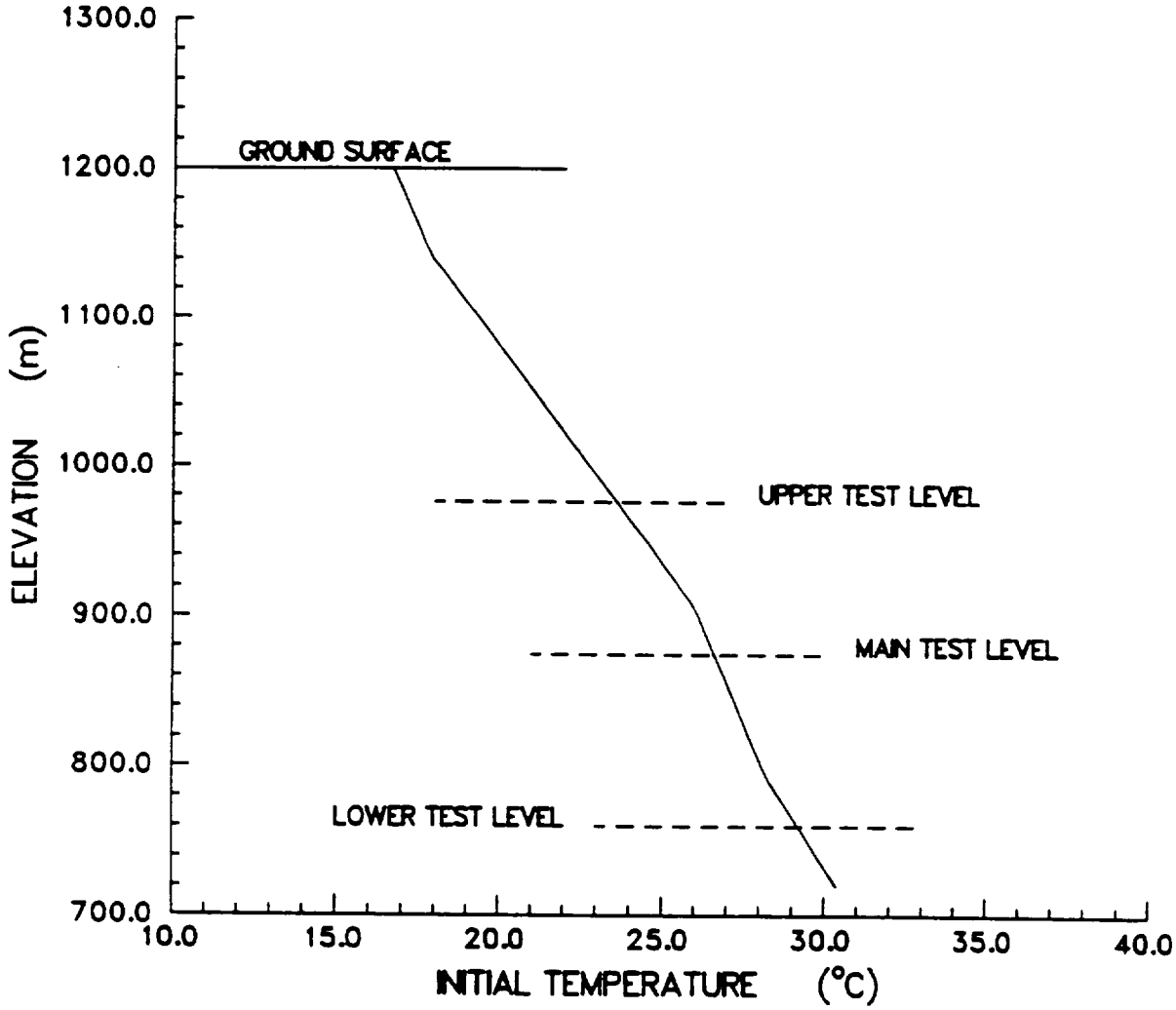

Figure 6. Initial Temperatures at 180-m Distance from the East Edge of the Repository (Time = 0)

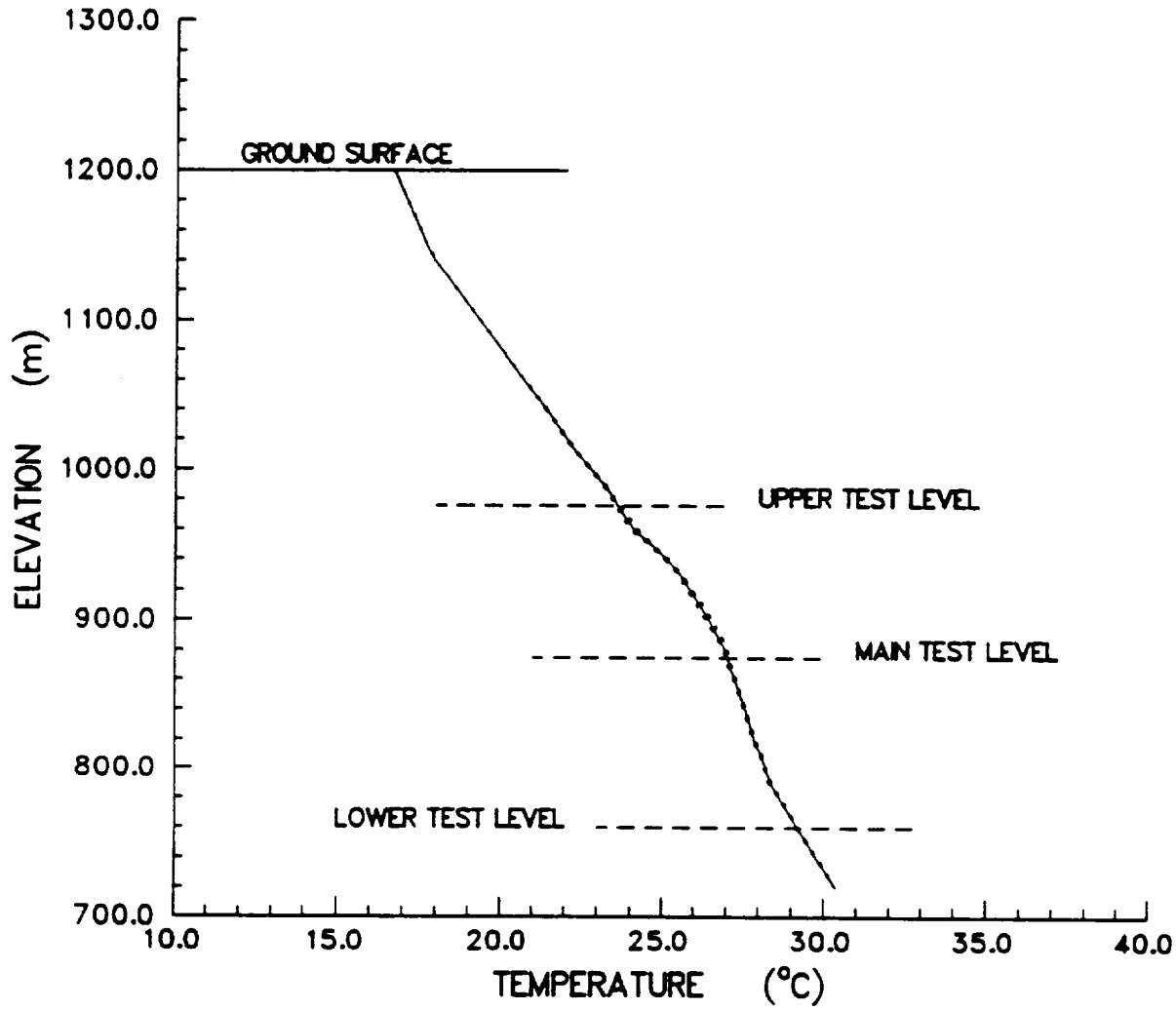

Figure 7. Expected Temperature (Solid Line) and Expected Deviations (Dotted Lines, Equation 15) at 180-m Distance From the East Edge of the Heat-Generating Region in Section CC′ (Time = 100 years)

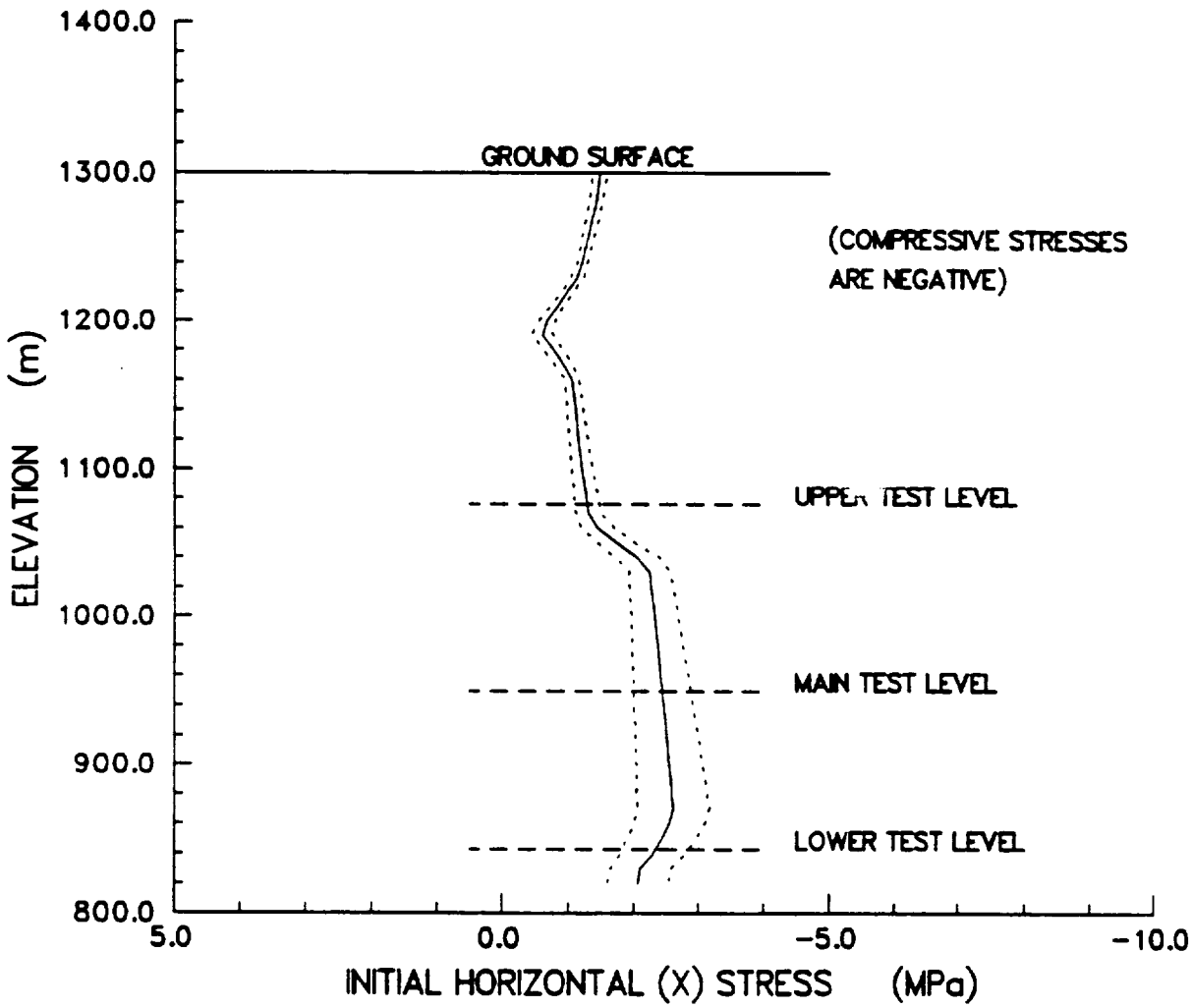

Figure 8. Initial Horizontal Stress (Solid Line) and Expected Deviations (Dotted Lines, Equation 15) at Projection of ES-1 on Section CC′ (Time = 0)

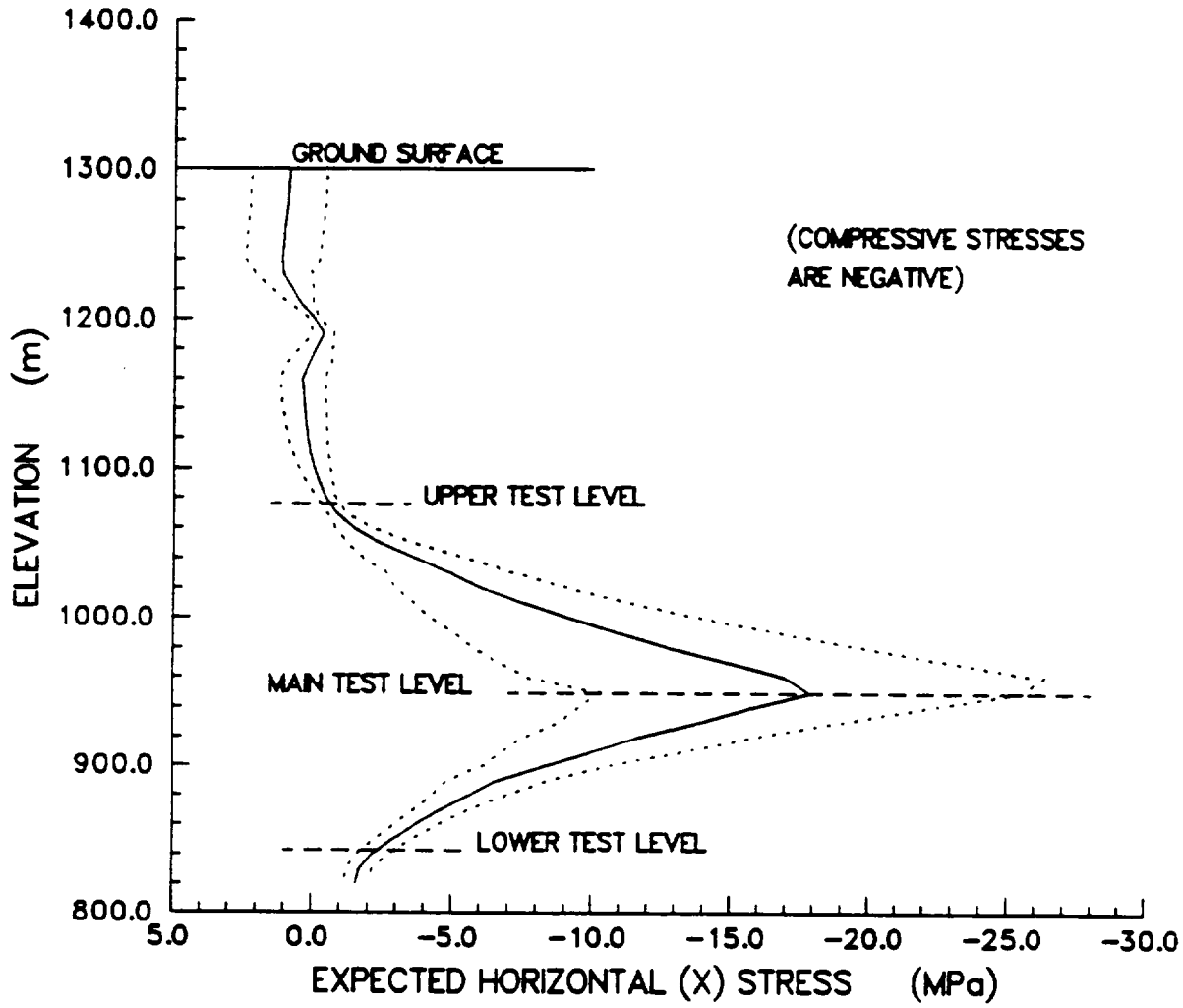

Figure 9. Expected Horizontal Stress (Solid Line) and Expected Deviations (Dotted Lines, Equation 15) at Projection of ES-1 on Section CC′ (Time = 100 years)

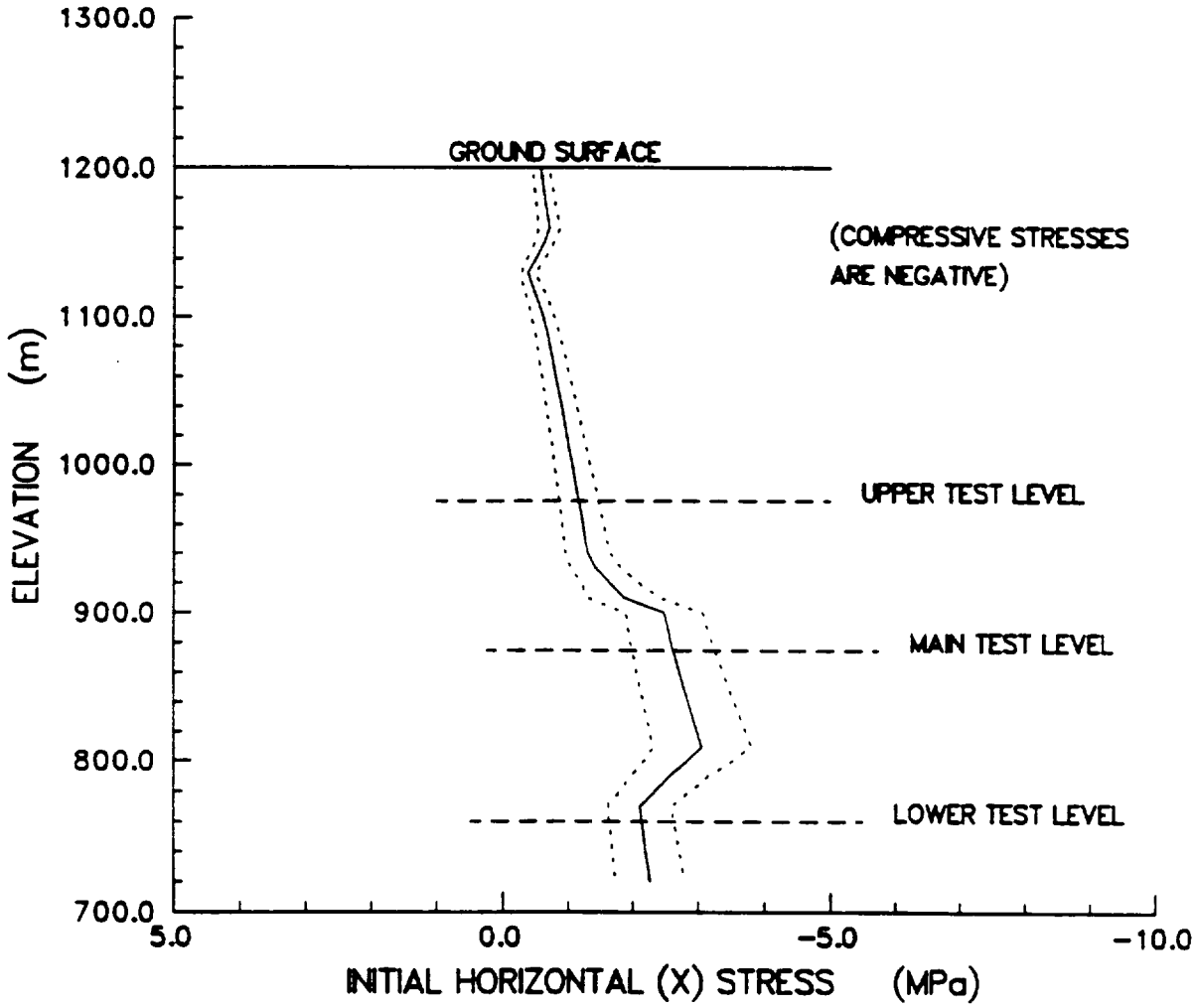

Figure 10. Initial Horizontal Stress (Solid Line) and Expected Deviations (Dotted Lines, Equation 15) at 180-m Distance from the East Edge of the Heat-Generating Region in Section CC′ (Time = 0)

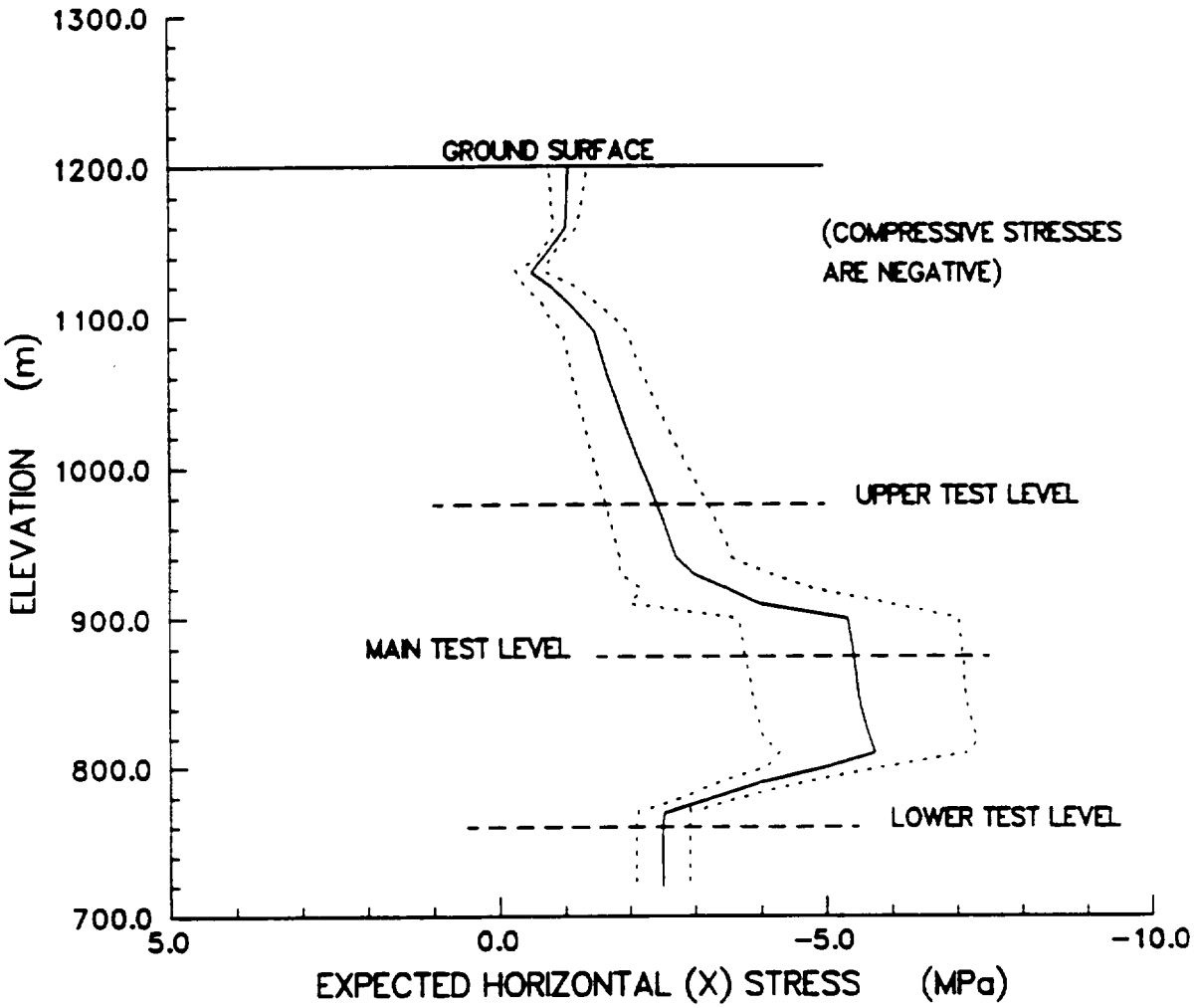

Figure 11. Expected Horizontal Stress (Solid Line) and Expected Deviations (Dotted Lines, Equation 15) at 180-m Distance From the East Edge of the Heat-Generating Region (Time = 100 years)

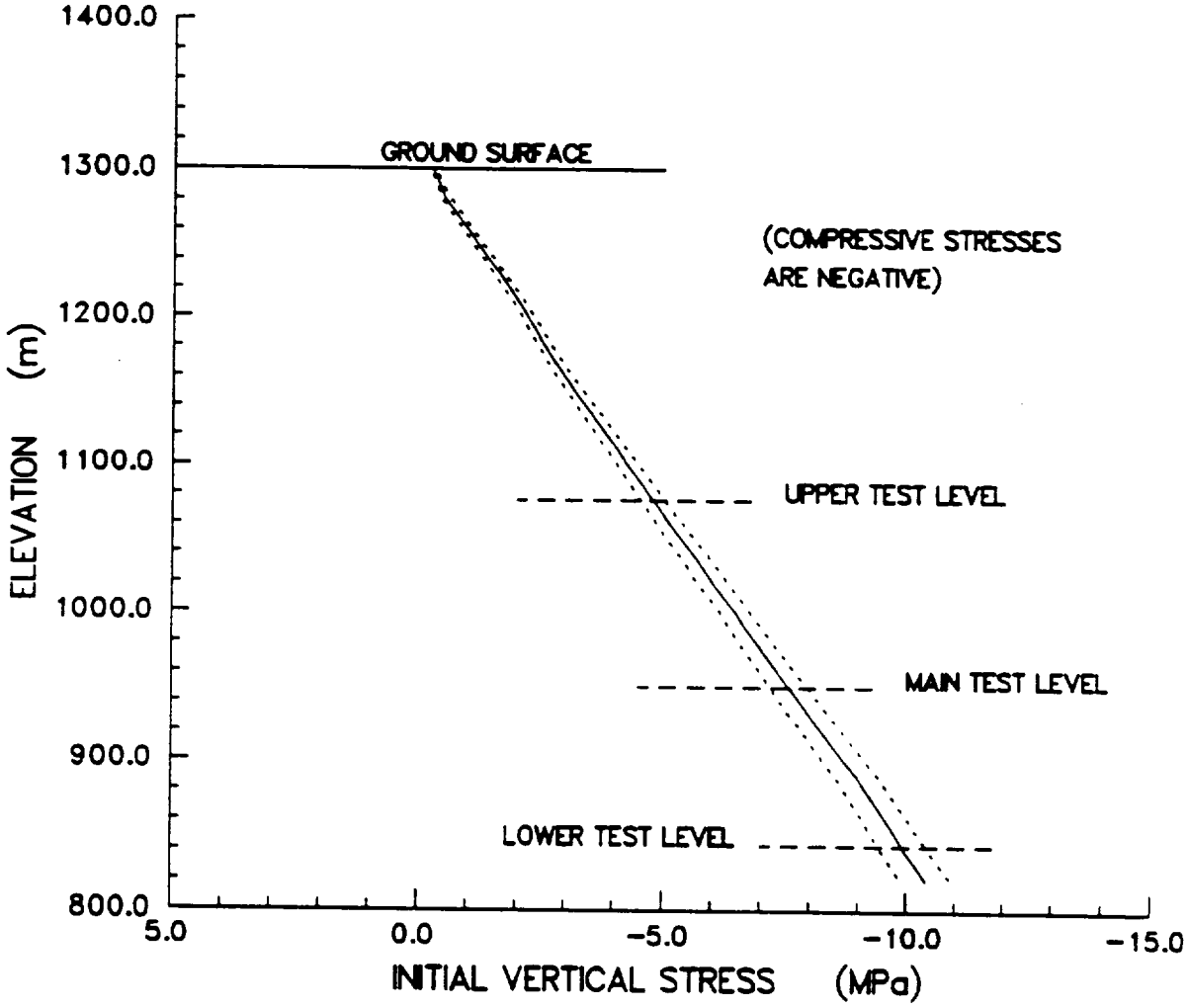

Figure 12. Initial Vertical Stress (Solid Line) and Expected Deviations (Dotted Lines, Equation 15) at Projection of ES-1 on Section CC′ (Time = 0)

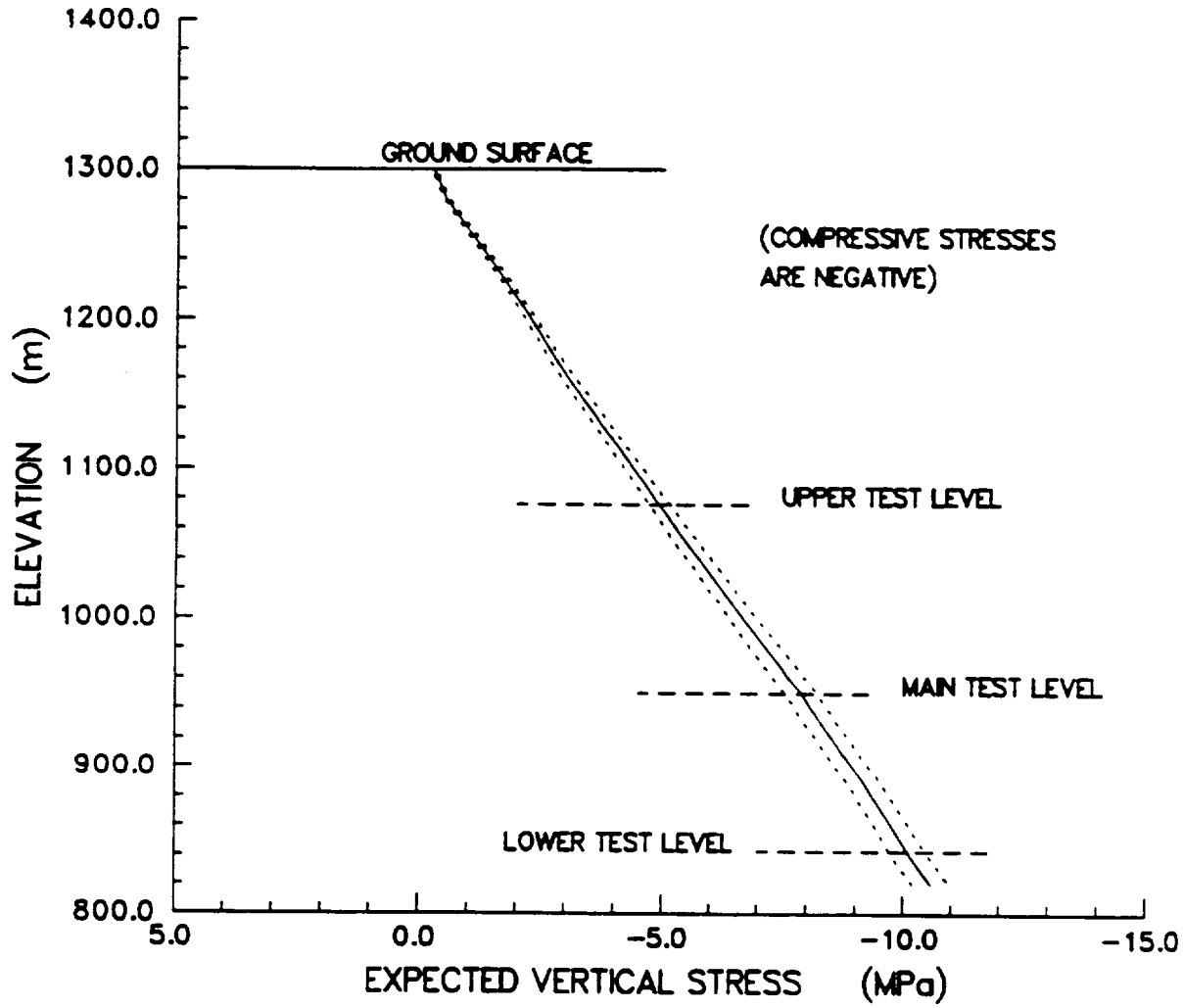

Figure 13. Expected Vertical Stress (Solid Line) and Expected Deviations (Dotted Lines, Equation 15) at Projection of ES-1 on Section CC′ (Time = 100 years)

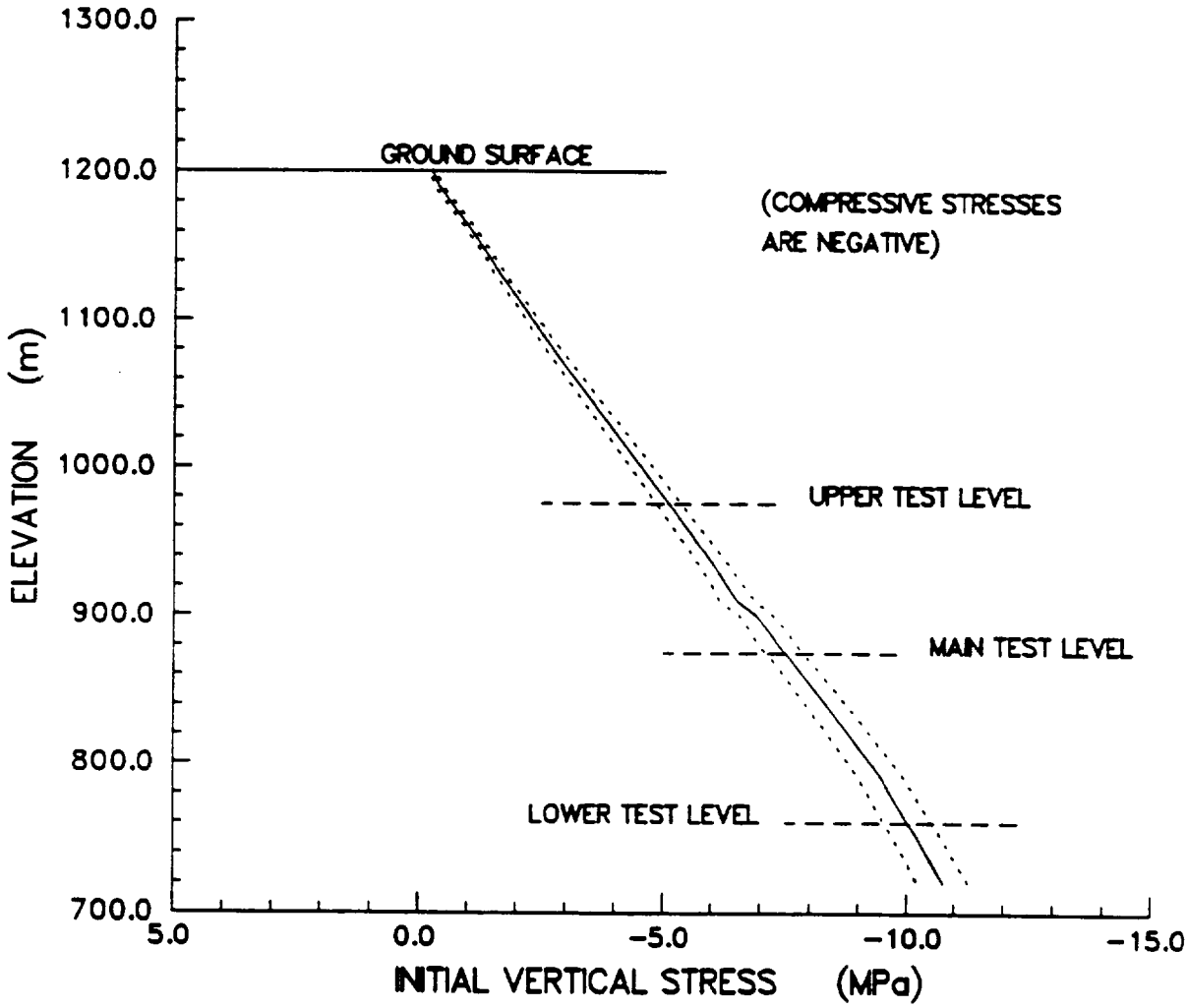

Figure 14. Initial Vertical Stress (Solid Line) and Expected Deviations (Dotted Lines, Equation 15) at 180-m Distance from the East Edge of the Heat-Generating Region in Section CC′ (Time = 0)

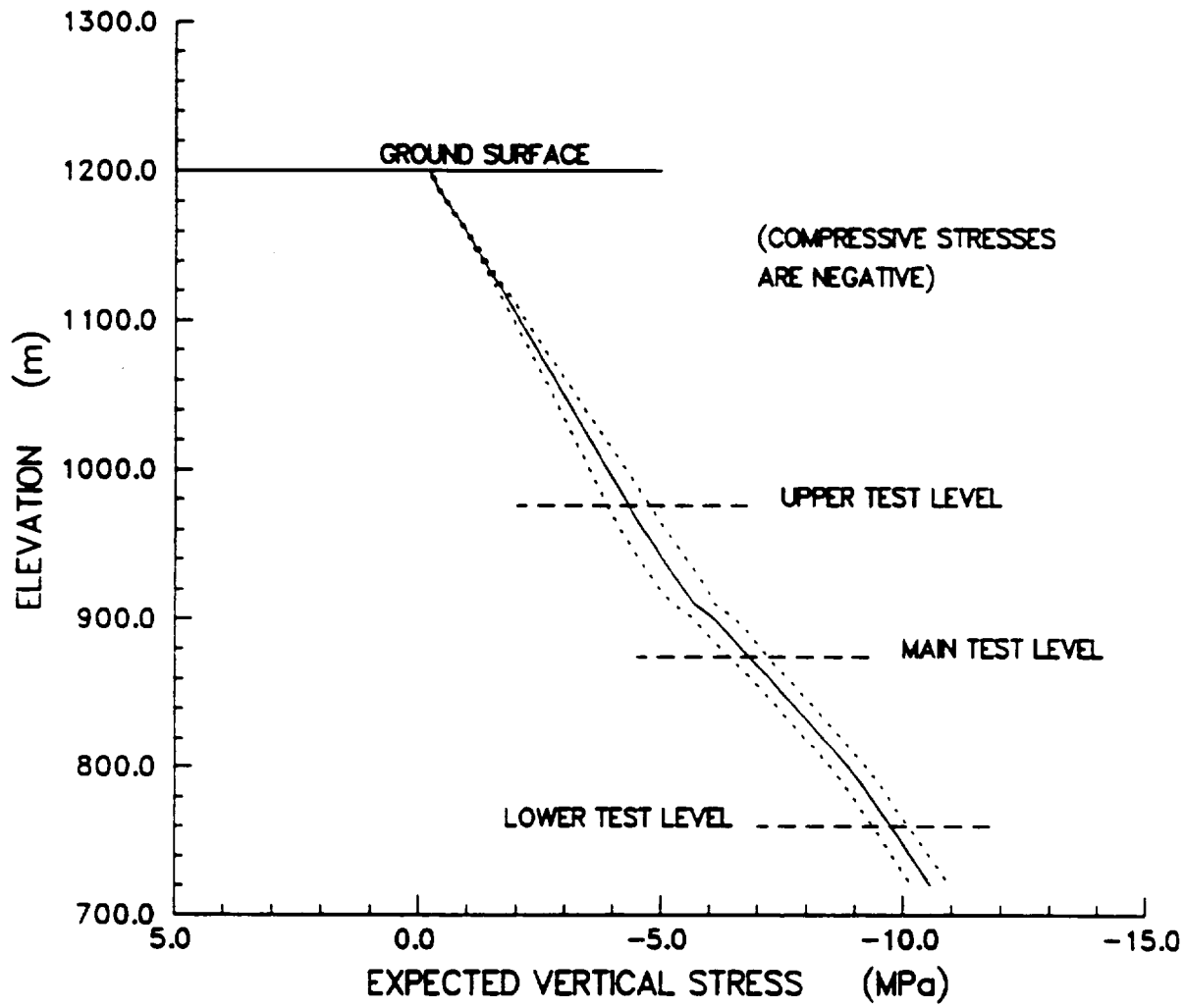

Figure 15. Expected Vertical Stress (Solid Line) and Expected Deviations (Dotted Lines, Equation 15) at 180-m Distance from the East Edge of the Heat-Generating Region (Time = 100 years)

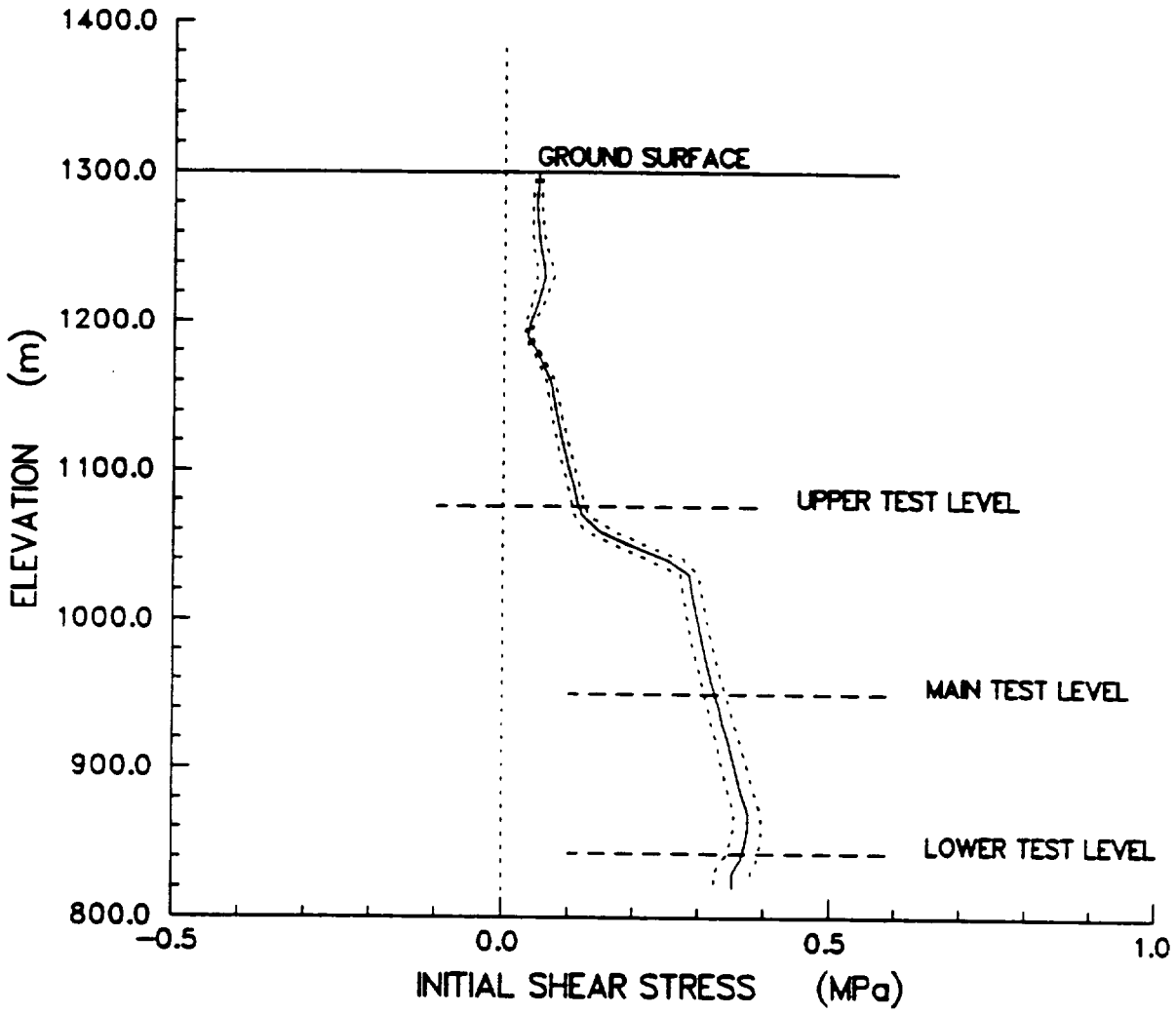

Figure 16. Initial Shear Stress (Solid Line) and Expected Deviations (Dotted Lines, Equation 15) at Projection of ES-1 on Section CC′ (Time = 0)

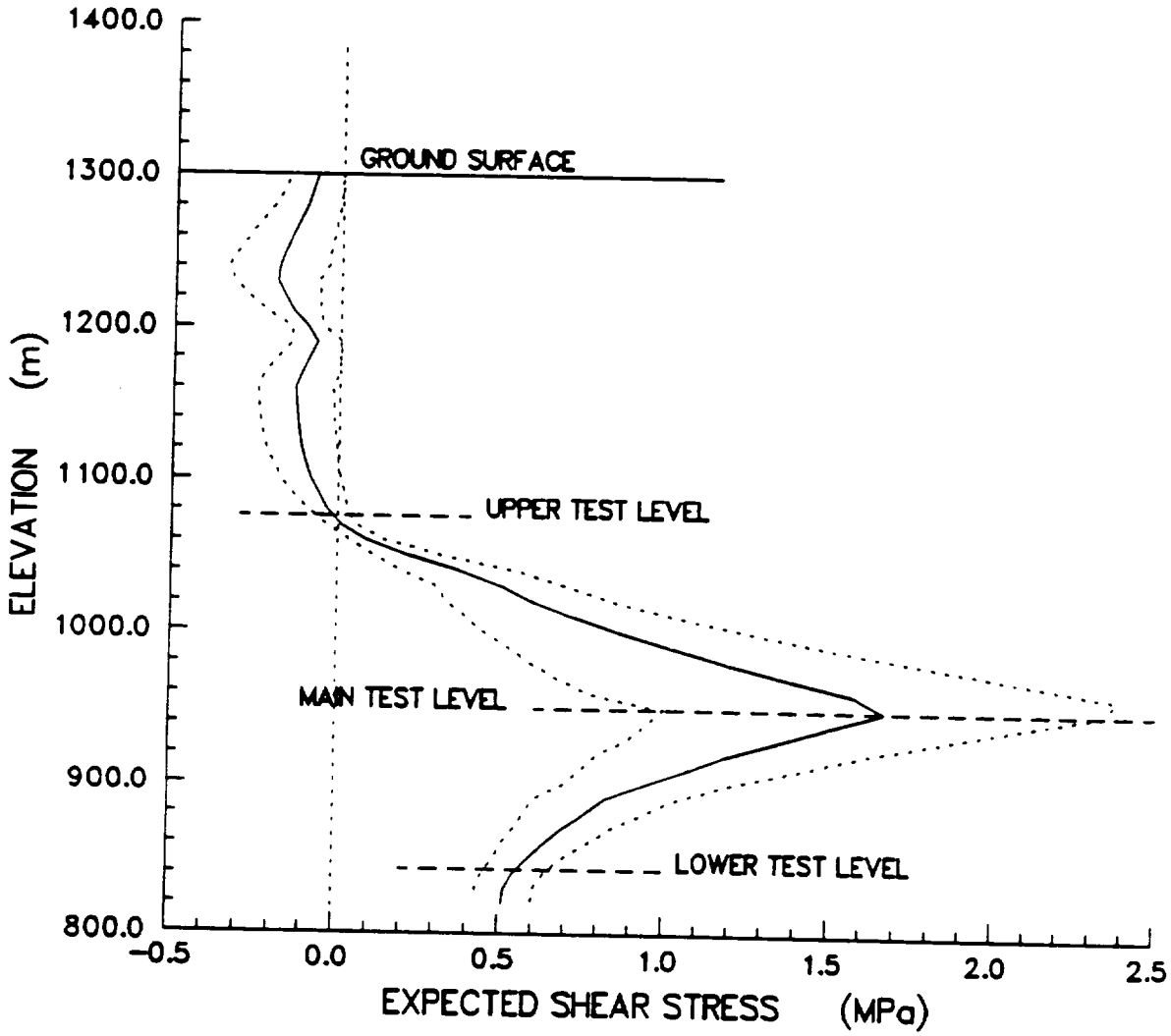

Figure 17. Expected Shear Stress (Solid Line) and Expected Deviations (Dotted Lines, Equation 15) at Projection of ES-1 on Section CC' (Time = 100 years)

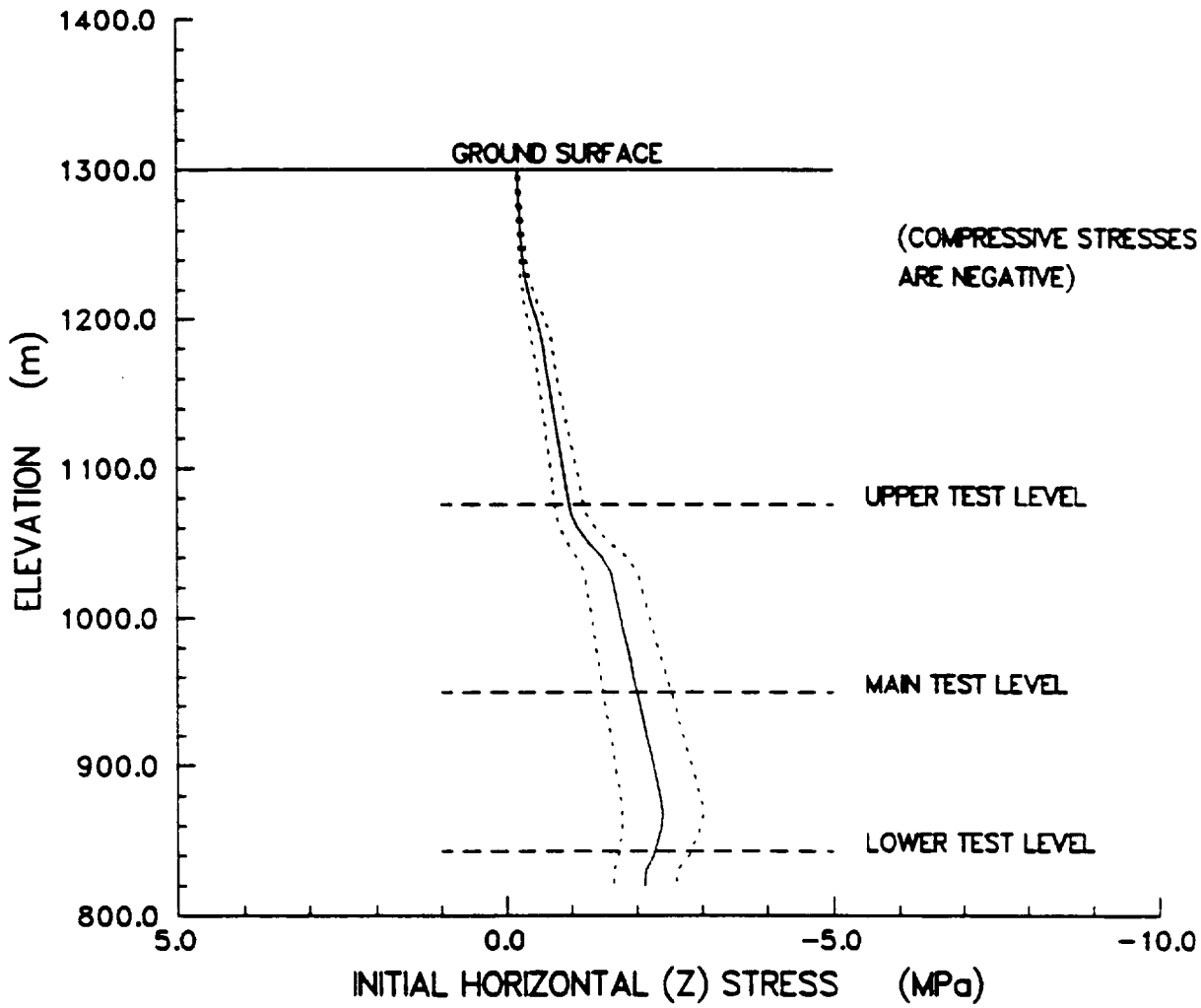

Figure 18. Initial Horizontal (Z) Stress (Solid Line) and Expected Deviations (Dotted Lines, Equation 15) at Projection of ES-1 on Section CC' (Time = 0)

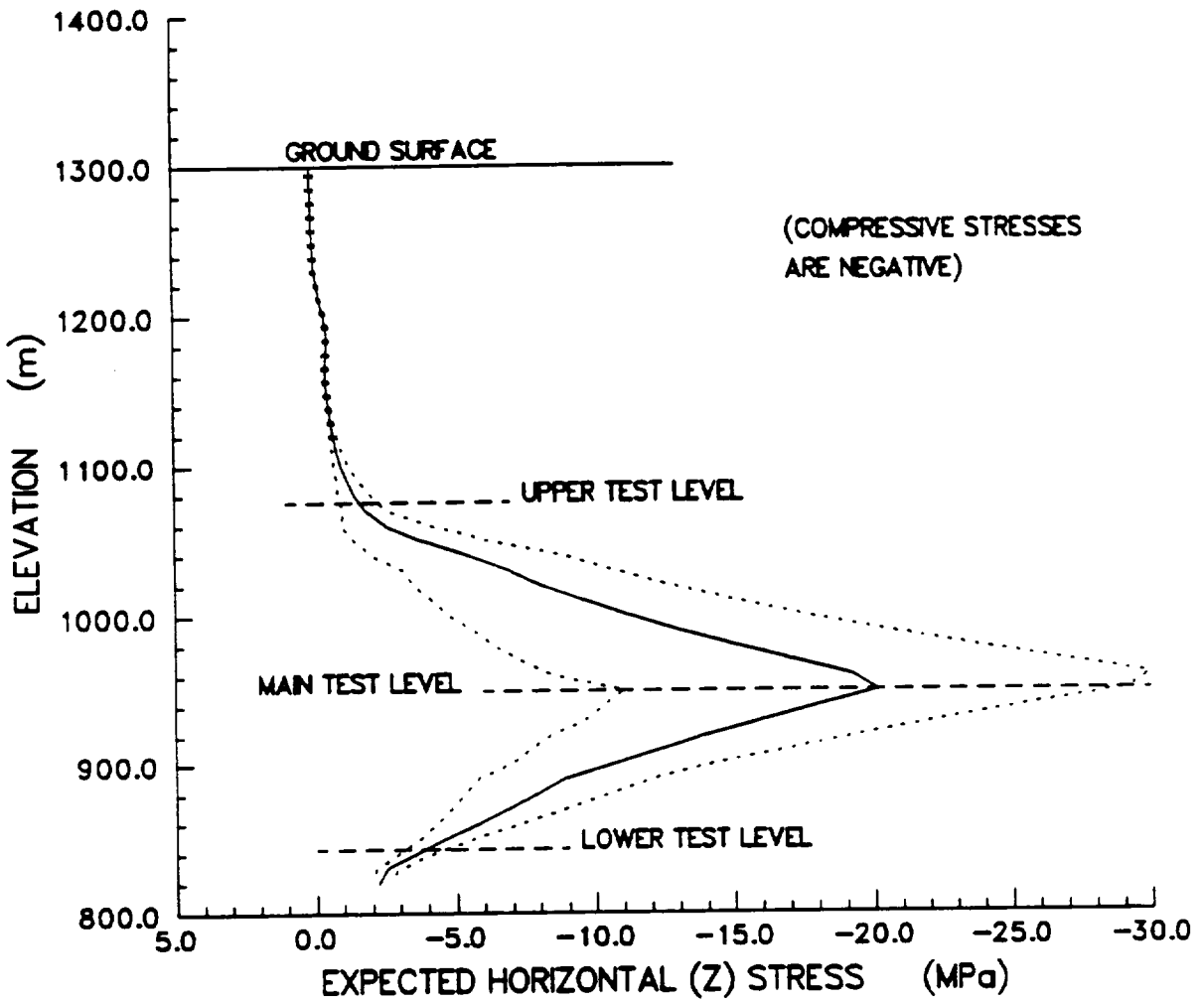

Figure 19. Expected Horizonal (Z) Stress (Solid Line) and Expected Deviations (Dotted Lines. Equation 15) at Projection of ES-1 on Section CC′ (Time = 100 years)

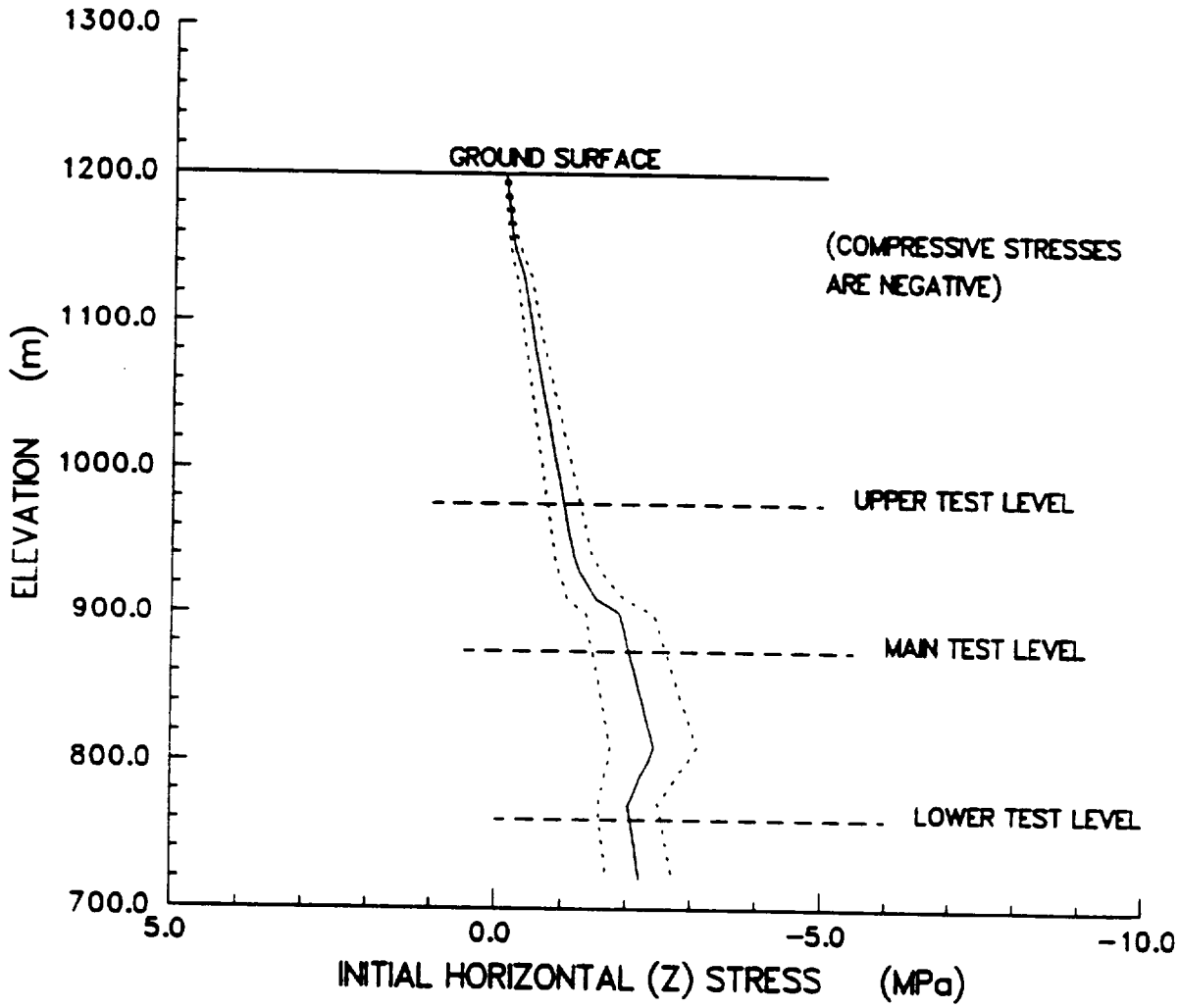

Figure 20. Initial Horizontal (Z) Stress (Solid Line) and Expected Deviations (Dotted Lines, Equation 15) at 180-m Distance from the East Edge of the Heat-Generating Region (Time = 0)

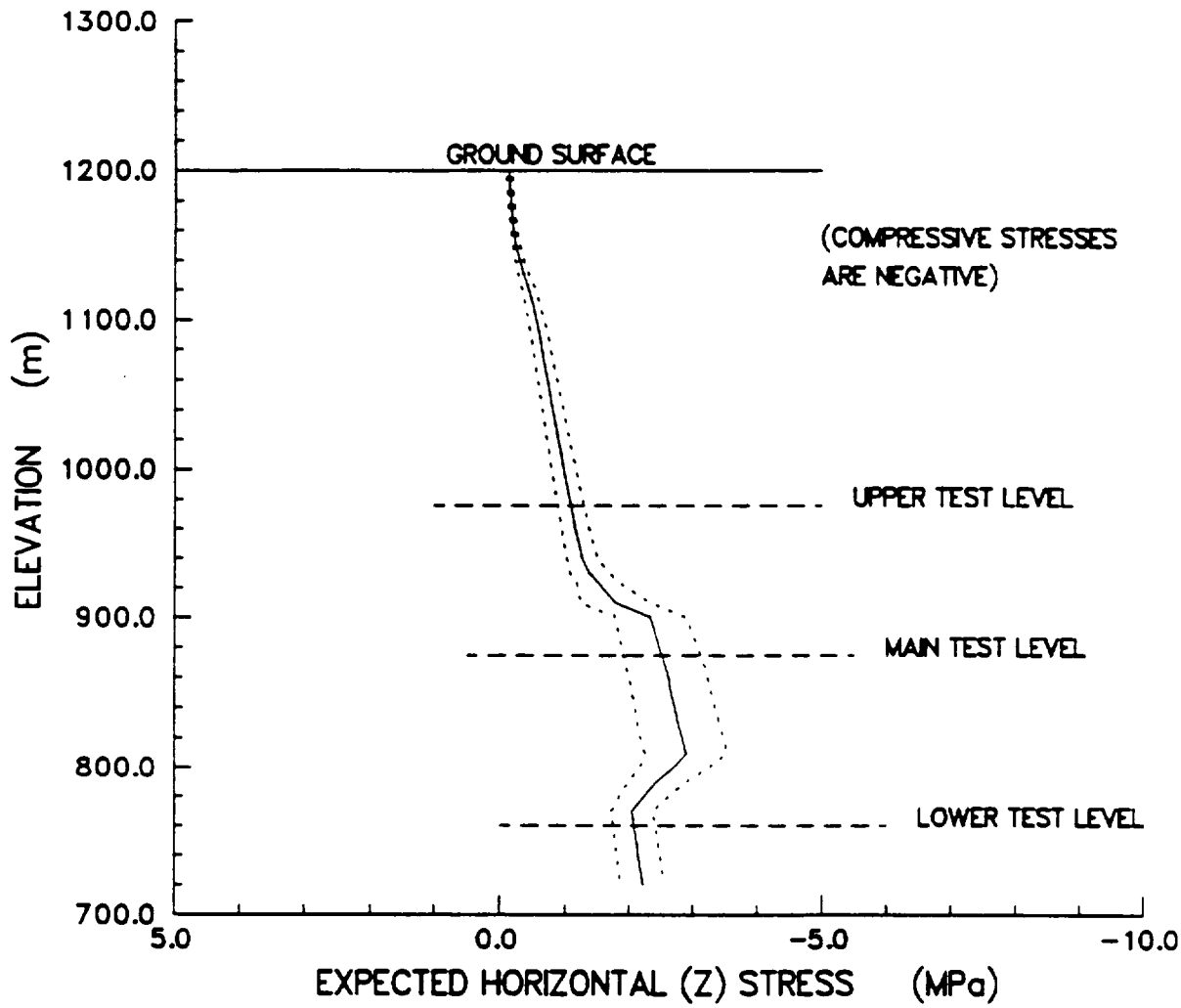

Figure 21. Expected Horizontal (Z) Stress (Solid Line) and Expected Deviations (Dotted Lines, Equation 15) at 180-m Distance from the East Edge of the Repository Region (Time = 100 years)

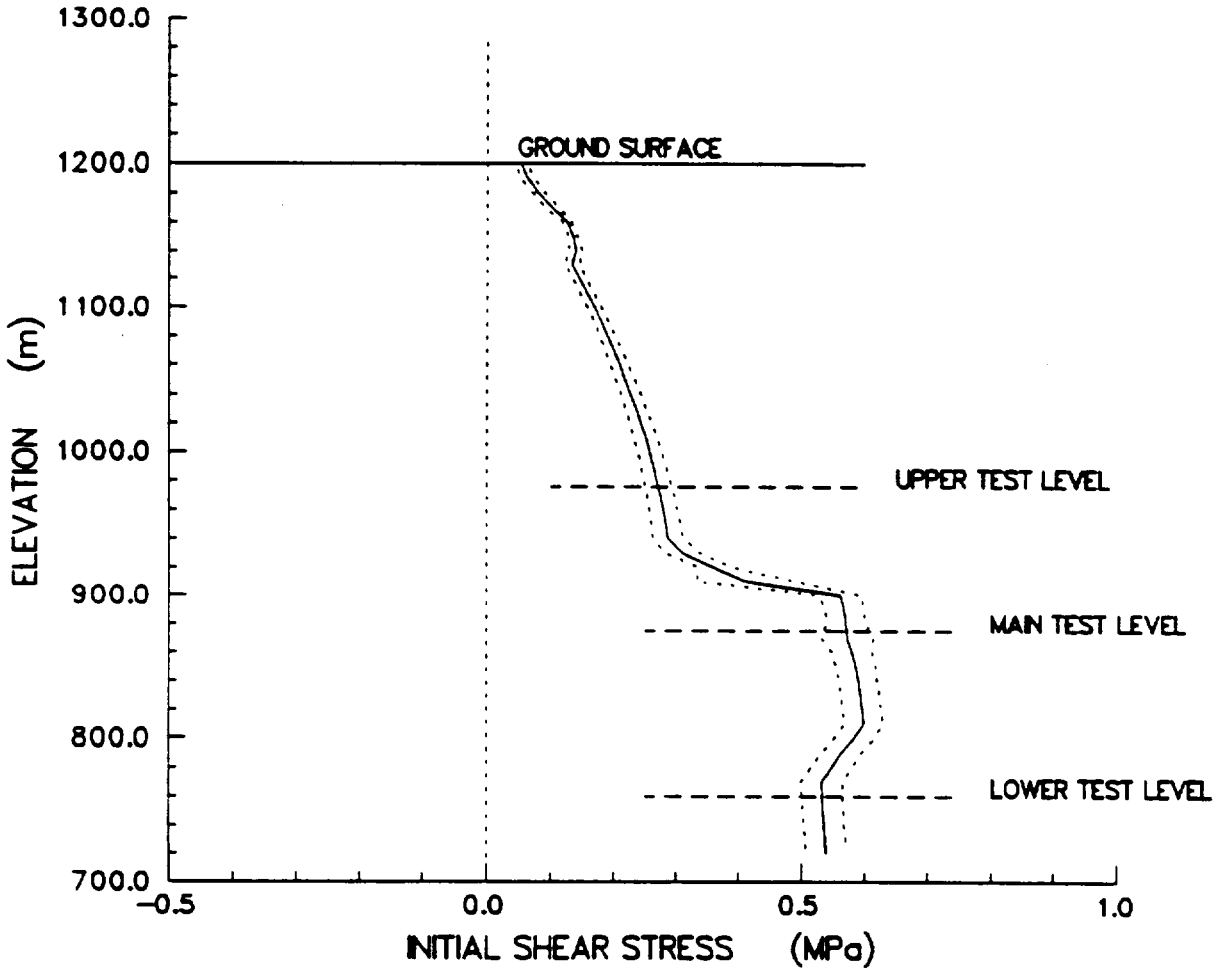

Figure 22. Initial Shear Stress (Solid Line) and Expected Deviations (Dotted Lines, Equation 15) at 180-m Distance from the East Edge of the Heat-Generating Region in Section CC′ (Time = 0)

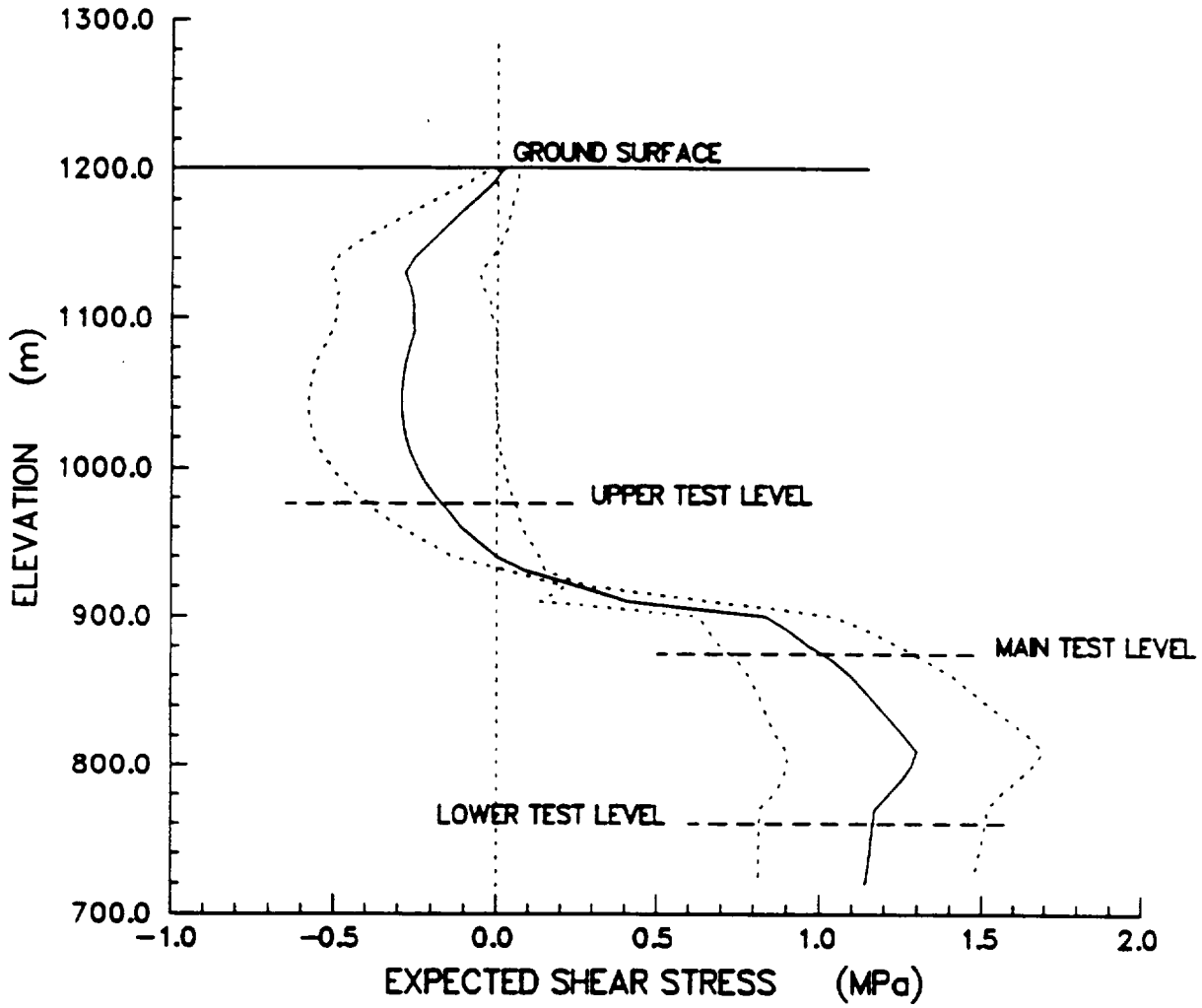

Figure 23. Expected Shear Stress (Solid Line) and Expected Deviations (Dotted Lines, Equation 15) at 180-m Distance from the East Edge of the Heat-Generating Region in Section CC′ (Time = 100 years)

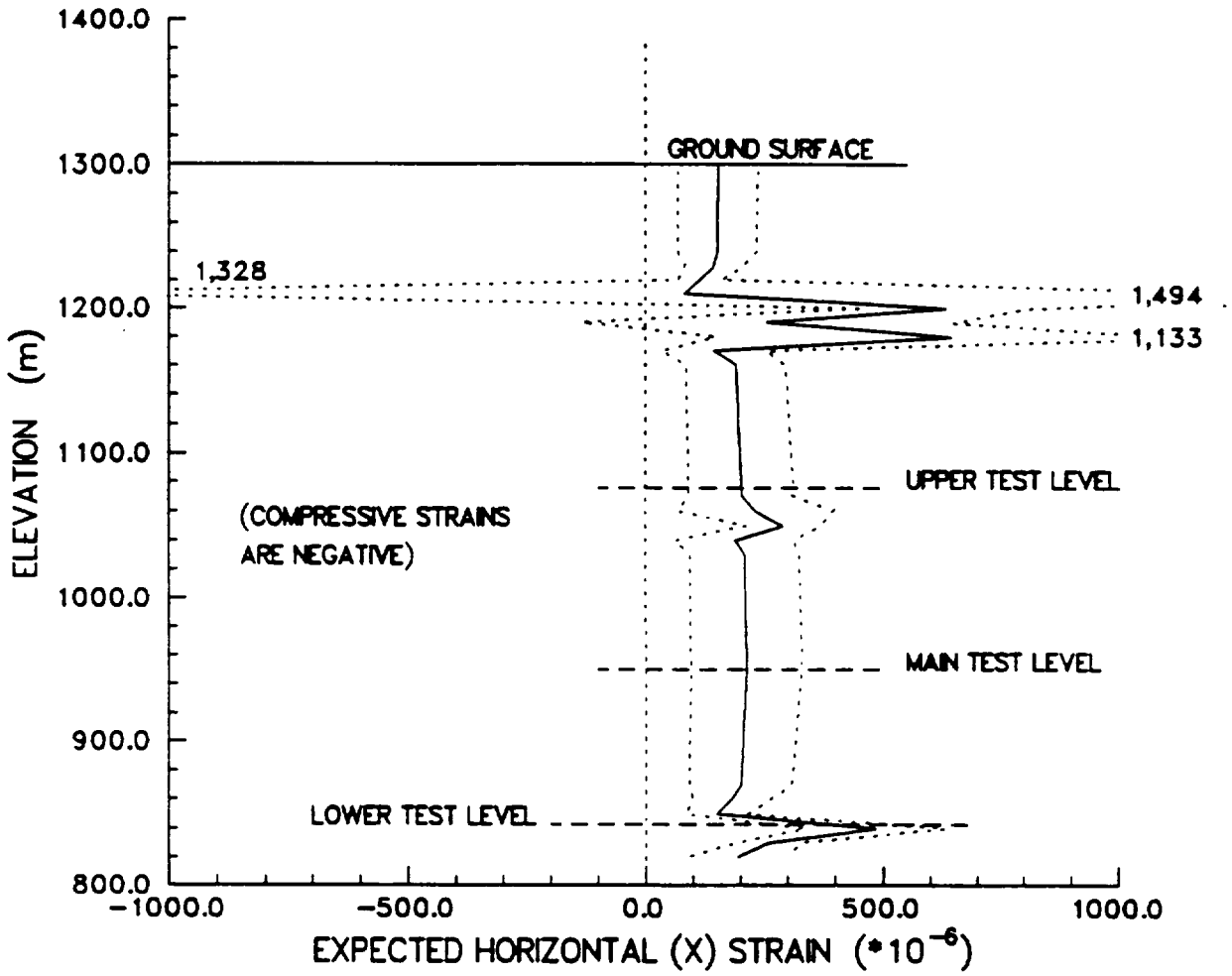

Figure 24. Expected Horizontal Strain (Solid Line) and Expected Deviations (Dotted Lines, Equation 15) at Projection of ES-1 on Section CC' (Time = 100 years)

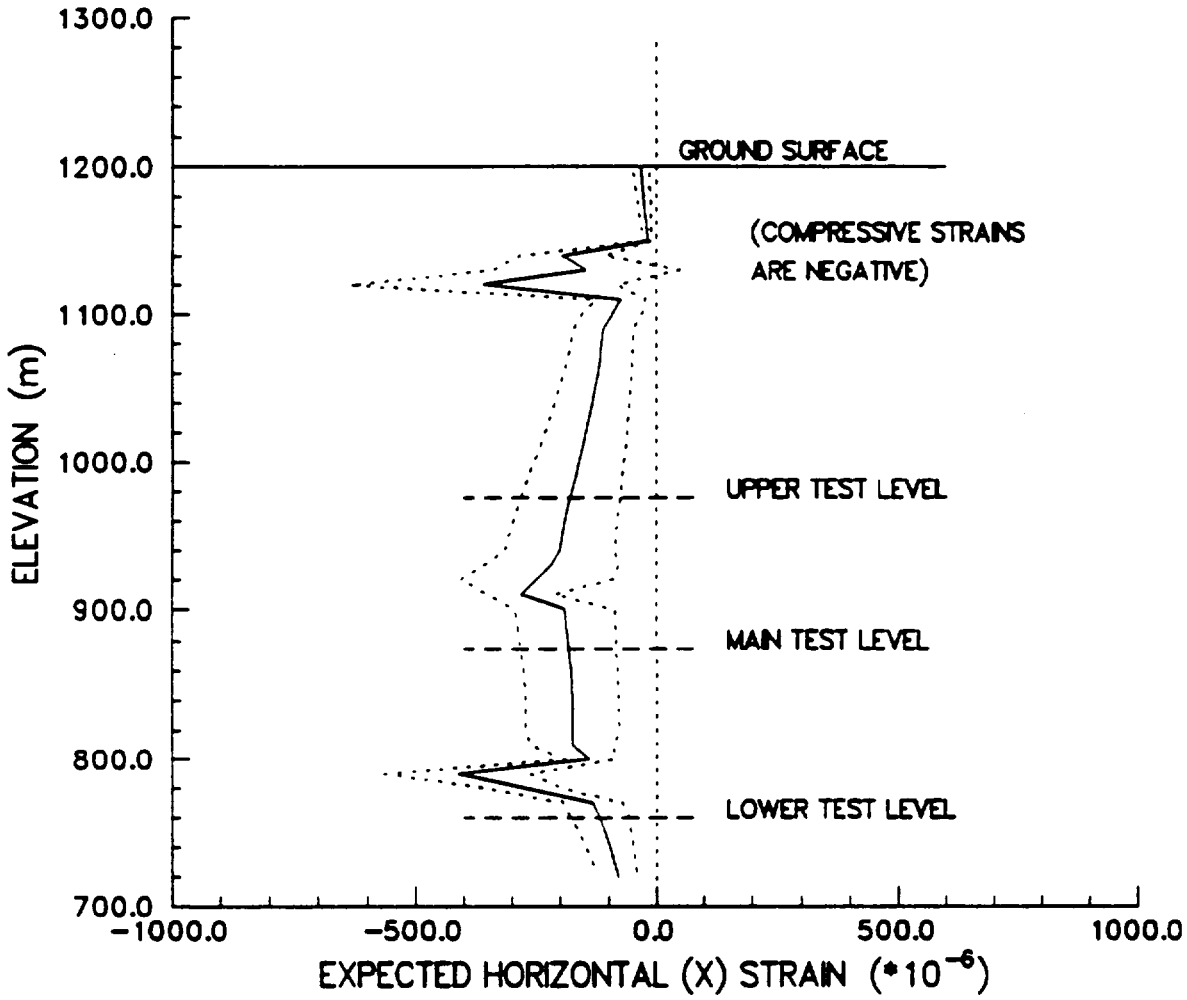

Figure 25. Expected Horizontal Strain (Solid Line) and Expected Deviations (Dotted Lines, Equation 15) at 180-m Distance from the East Edge of the Heat-Generating Region in Section CC′ (Time = 100 years)

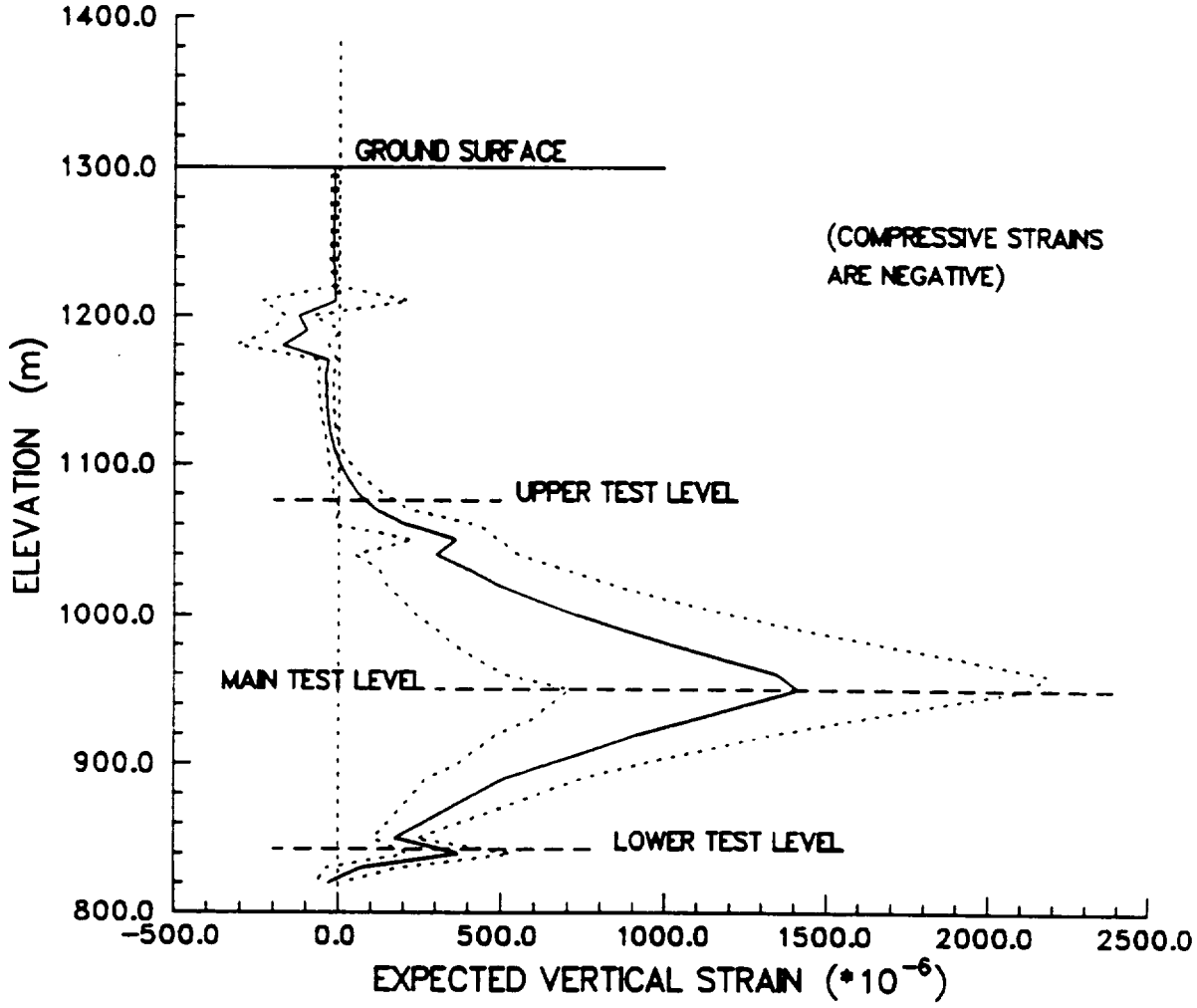

Figure 26. Expected Vertical Strain (Solid Line) and Expected Deviations (Dotted Lines, Equation 15) at Projection of ES-1 on Section CC′ (Time = 100 years)

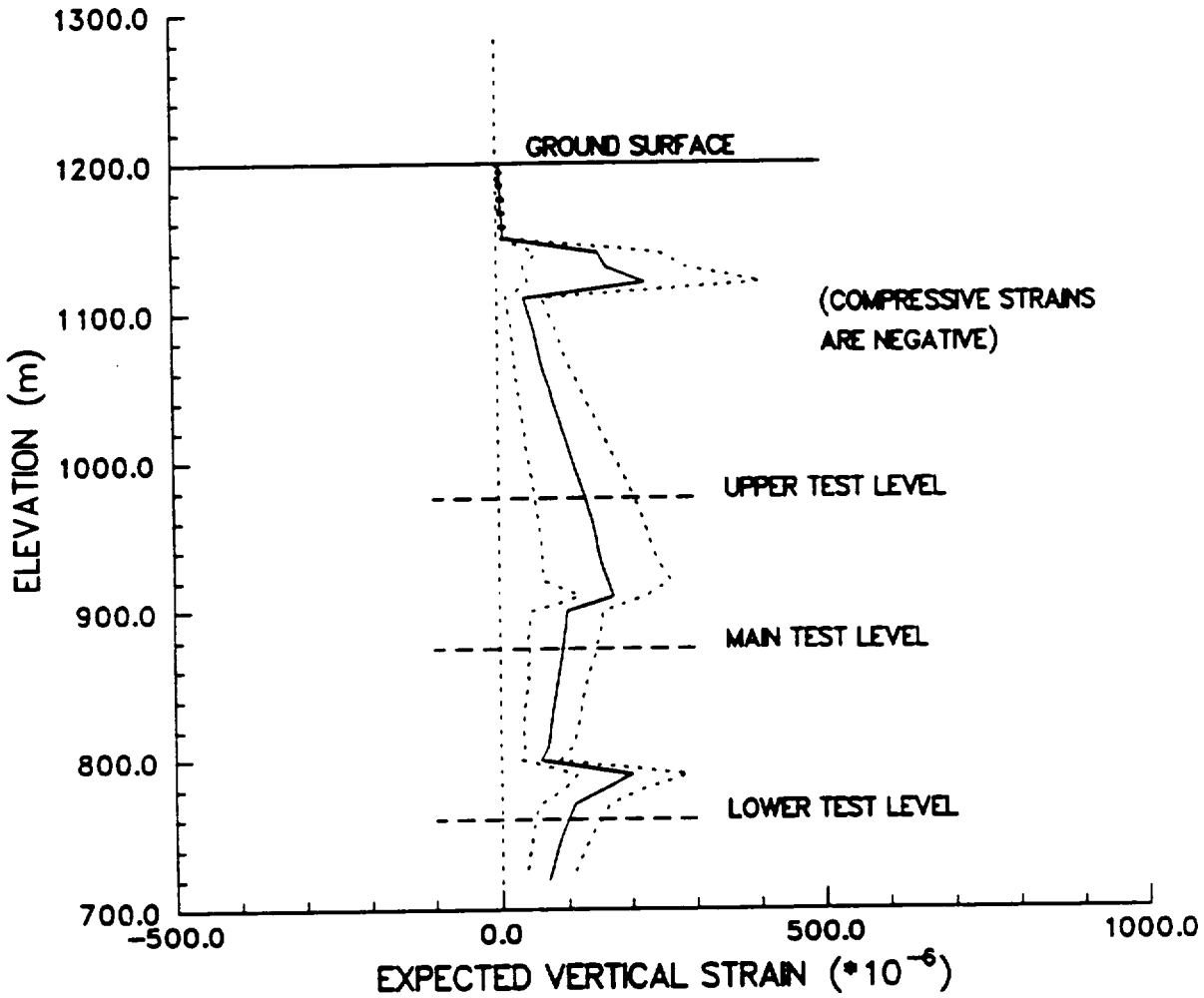

Figure 27. Expected Vertical Strain (Solid Line) and Expected Deviations (Dotted Lines, Equation 15) at 180-m Distance from the East Edge of the Heat-Generating Region in Section CC′ (Time = 100 years)

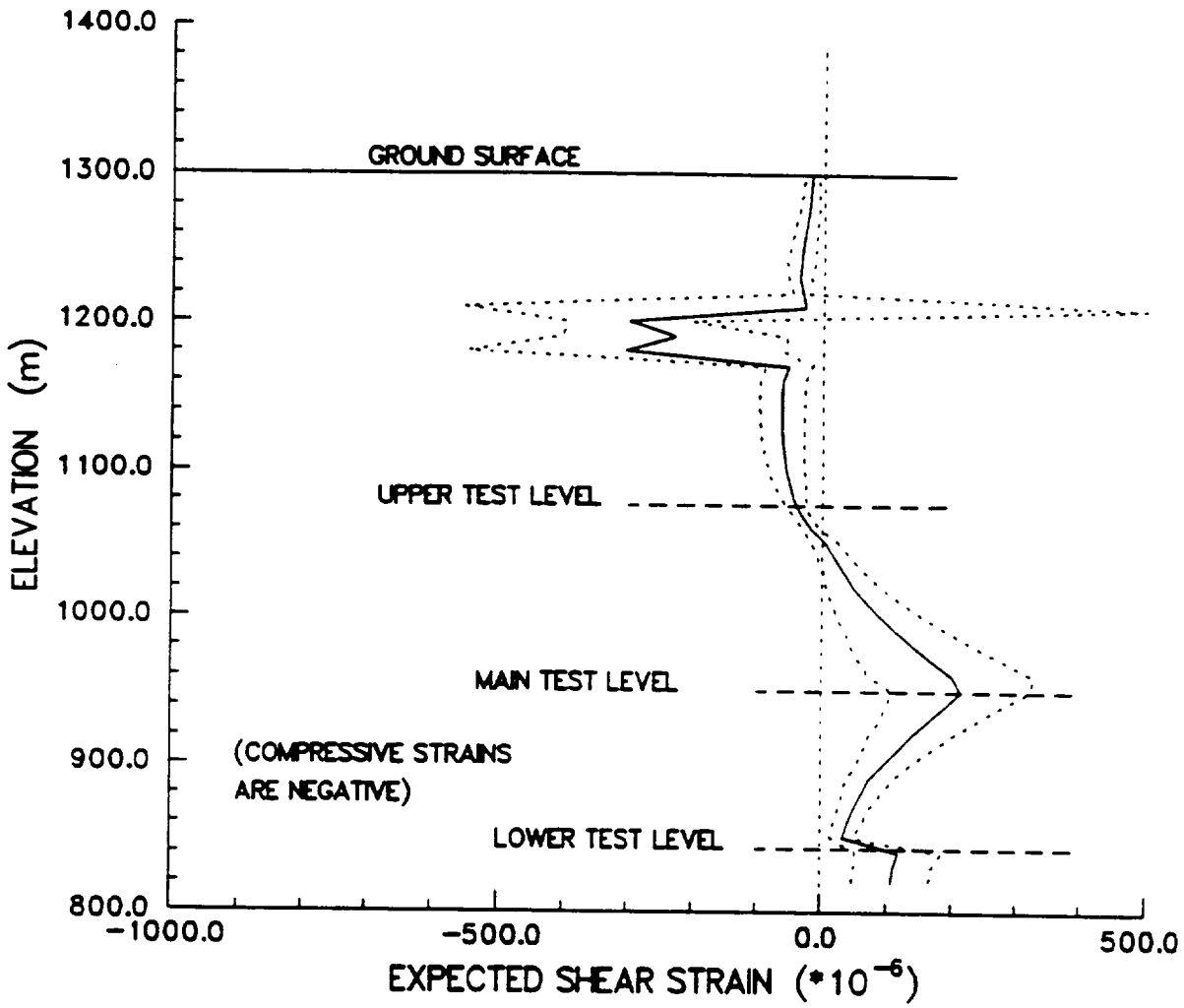

Figure 28. Expected Shear Strain (Solid Line) and Expected Deviations (Dotted Lines, Equation 15) at Projection of ES-1 on Section CC' (Time = 100 years)

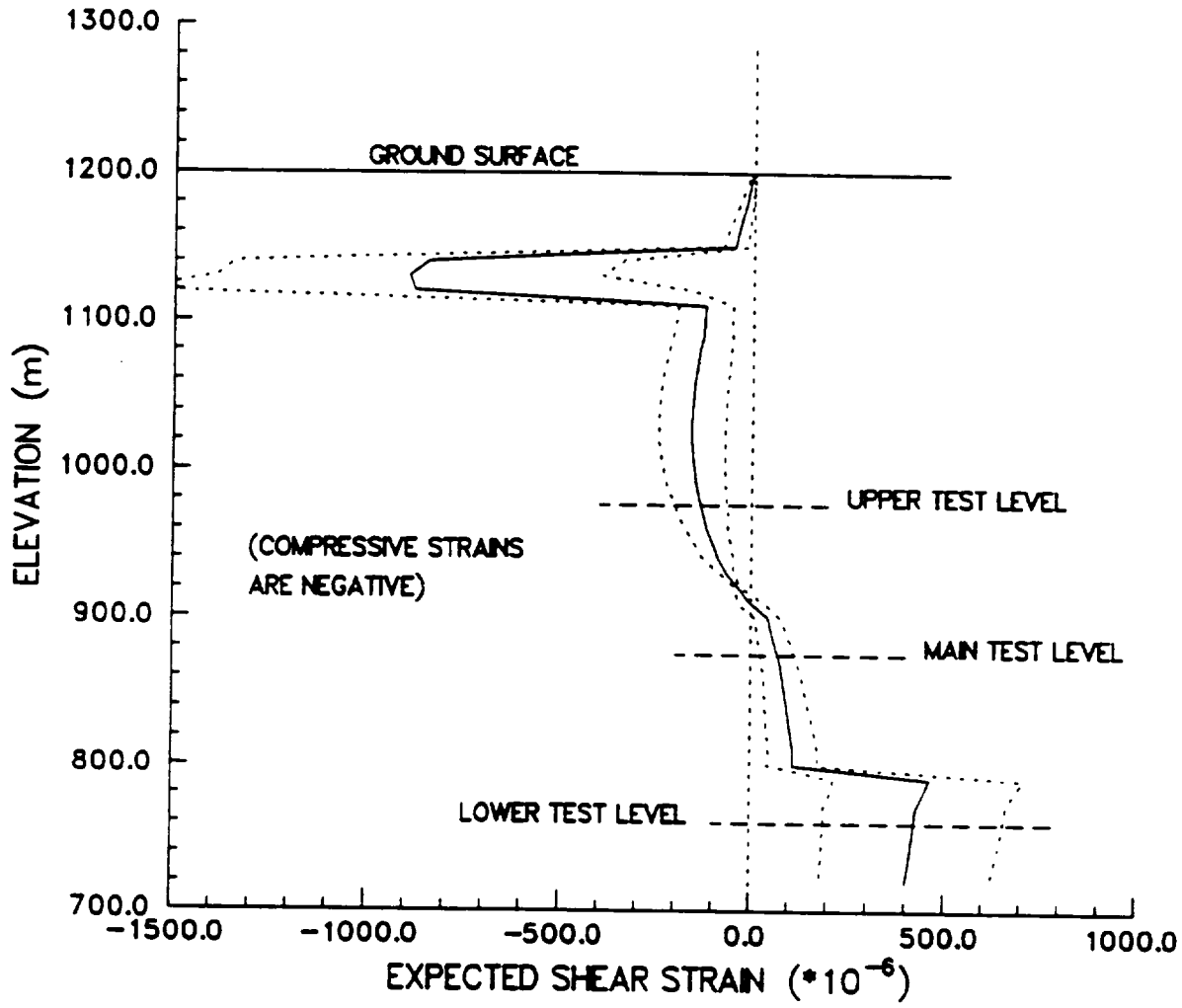

Figure 29. Expected Shear Strain (Solid Line) and Expected Deviations (Dotted Lines, Equation 15) at 180-m Distance from the East Edge of the Heat-Generating Region in Section CC′ (Time = 100 years)

TITLE I DESIGN SUMMARY REPORT
REVISION 1
DRAFT H
VOLUME 5, APPENDIX

5.10 "Drift Design Methodology and Preliminary Application for the Yucca Mountain Site Characterization Project," SAND89-0837

SAND89-0837
DRAFT

SAND89-0837

Distribution
Category UC-814
Printed April, 1991

DRIFT DESIGN METHODOLOGY AND PRELIMINARY APPLICATION FOR THE YUCCA MOUNTAIN SITE CHARACTERIZATION PROJECT

by

M. P. Hardy
J. F. T. Agapito & Associates, Inc.
Grand Junction, CO 81506

and

Stephen J. Bauer
Sandia National Laboratories
Albuquerque, NM 87185

ABSTRACT

Excavation stability in an underground nuclear waste repository is required during construction, emplacement, retrieval (if required), and closure phases to ensure worker health and safety, and to prevent development of potential pathways for radionuclide migration in the post-closure period. Stable excavations are developed by appropriate excavation procedures, design of the room shape, design and installation of rock support reinforcement systems, and implementation of appropriate monitoring and maintenance programs. In addition to the loads imposed by the in situ stress field, the repository drifts will be impacted by thermal loads developed after waste emplacement and, periodically, by seismic loads from naturally occurring earthquakes and underground nuclear events. A priori evaluation of stability is required for design of the ground support system, to confirm that the thermal loads are reasonable, and to support the license application process. In this report, a design methodology for assessing drift stability is presented. This is based on site conditions, together with empirical and analytical methods. Analytical numerical methods are emphasized at this time because empirical data are unavailable for excavations in welded tuff either at elevated temperatures or under seismic loads. The analytical methodology incorporates analysis of rock masses that are systematically jointed, randomly jointed, and sparsely jointed. In situ thermal and seismic loads are considered. Methods of evaluating the analytical results and estimating ground support requirements for the full range of expected ground conditions are outlined. The results of a preliminary application of the methodology using the limited available data are presented. This methodology is expected to evolve as excavation observation at the Exploratory Shaft Facility demonstrates the controlling deformation mechanisms and allows site-specific evaluation of in situ properties. As more experience is gained at the site, design based on empirical and observational methods will emerge for application during construction of the repository.

Raytheon Services Nevada
YMP Library Copy

This report was prepared at Quality Assurance Level I and pertains to WBS Element 124232. The preliminary application of the methodology presented in Chapter 12 and the scoping analyses completed to support that preliminary application were non-quality related activities.

PREFACE

The drift design methodology outlines procedures for drift design for a potential repository in welded tuff at the Yucca Mountain Site, but does not discuss who will be responsible for implementing these procedures. Until this date, the repository design has been the responsibility of Sandia National Laboratories with architect engineering (A/E) support.

Implementation of the drift design procedures includes interpretation of data from laboratory, field and prototype tests; compliance with regulatory requirements, numerical analysis, and tradeoff studies; integration with other aspects of the repository layout and operations; consideration of licensing strategies; postclosure performance constraints; and development of specific procedures suitable to meet Quality Assurance requirements. It is anticipated that most of this work will be completed by the repository designer with input and review from other departments. Once underground excavation begins, procedures for data collection from exposed rock surfaces and feedback to the drift design team must be developed.

It is recommended a drift design review team be established by the Project Office during the prelicensing phases of repository design to advise an implementation of the drift design methodology and to review proposed drift designs, including the ground support/reinforcement details. This review team should include representatives with expertise in the geological sciences, laboratory testing, computation mechanics, construction, waste handling, repository design and performance assessment.

ACKNOWLEDGEMENTS

This report was prepared by the authors with significant assistance from supporting staff and review consultants, and input from technical reviewers. Mr. B. Ehgartner, A. Mansure, and R. Stinebaugh of Sandia National Laboratories were instrumental in initiating the concept of the drift design methodology and contributed to the overall report outline. Dr. C. St. John, formerly of J. F. T. Agapito & Associates, Inc. and presently acting as a consultant, was also initially involved in development of the concept of the drift design methodology and has been involved throughout its history of development as a technical reviewer.

Significant technical contributions have been made by Mr. C. E. Brechtel and M. Lin of J. F. T. Agapito & Associates, Inc. They are responsible for the ground support designs and all numerical analyses, respectively, in the preliminary application of the drift design methodology, Chapter 12.

Dr. L. S. Costin and Mr. R. E. Finley of Sandia National Laboratories performed a formal technical review. Messrs. R. H. Price and E. E. Ryder of Sandia National Laboratories also provided review comments to a draft version of the report.

Prof. W. Hustrulid of the Colorado School of Mines and Dr. Z. T. Bieniawski of Pennsylvania State University have performed external technical reviews.

The authors also wish to acknowledge the professional contribution of Ms. K. L. Greathouse for her typing and editing of all drafts of this report.

TABLE OF CONTENTS

Section		Page
1.0	INTRODUCTION	1-1
	1.1 Purpose	1-1
	1.2 Report Organization	1-1
2.0	DRIFT DESIGN METHODOLOGY	2-1
	2.1 Methodology Outline	2-1
	2.2 Limitations of Design Methodology	2-4
	2.3 Implementation of Drift Design Methodology	2-4
3.0	DESIGN REQUIREMENTS AND GOALS	3-1
	3.1 Functional Requirements	3-1
	3.1.1 Size and Shape	3-1
	3.1.2 Drift Cross-Sectional Area	3-2
	3.2 Performance Goals	3-2
	3.2.1 Temperature	3-2
	3.2.2 Stability	3-2
	3.2.3 Materials	3-5
4.0	DRIFT DESIGN CRITERIA	4-1
	4.1 Ground Support/Rock Reinforcement Design	4-1
	4.2 Safety Factors	4-1
	4.3 Drift Design Criteria	4-4
5.0	DESIGN BASIS	5-1
	5.1 Stress at Drift Location	5-1
	5.1.1 In Situ Stress	5-1
	5.1.2 Thermal	5-2
	5.1.3 Seismic	5-2
	5.1.4 Stress Combinations	5-6
	5.1.5 Design Basis Loads for Specific Rock Categories	5-7
	5.2 Information for Design	5-7
	5.2.1 Stratigraphy and Rock Structure	5-7
	5.2.2 In Situ Conditions	5-8
	5.2.3 Thermal Properties	5-8
	5.2.4 Mechanical Properties	5-9
	5.2.5 Waste Characteristics	5-14
	5.2.6 Ground Support Properties	5-15
	5.3 ESF Repository Layout	5-15
	5.3.1 Exploratory Shaft Facility	5-19
	5.3.2 Repository	5-19
6.0	ANALYSIS OF UNSUPPORTED DRIFTS	6-1
	6.1 Candidate Drift Designs	6-1
	6.2 Parametric and Tradeoff Studies	6-1

TABLE OF CONTENTS (Concluded)

Section		Page
6.3	Select Preliminary Drift Configurations	6-1
6.4	Empirical Methods	6-1
6.4.1	Technique Selection	6-6
6.4.2	Application of Empirical Techniques	6-7
6.4.3	Results of Empirical Techniques	6-8
6.4.4	Interaction of Empirical and Numerical Methods	6-8
6.5	Numerical Methods for Unsupported Drifts	6-8
6.5.1	Model Selection	6-8
6.5.2	Application of Numerical Models	6-11
6.5.3	Results of Analyses	6-16
6.6	Drift Intersections	6-17
6.7	Borehole Drift Intersections	6-19
6.8	Fault Zones and Zones of Poor Rock Quality	6-19
6.9	Preliminary Ground Support Design	6-20
7.0	EVALUATION OF DRIFT ANALYSIS	7-1
7.1	Evaluation of Drift Design	7-1
7.1.1	Evaluation of Thermal Goals	7-1
7.1.2	Evaluation of Drift Stability	7-1
7.1.3	Drift Stability Criteria	7-2
7.2	Evaluation of Field Demonstration Studies	7-4
7.3	Preliminary Modifications	7-4
8.0	GROUND SUPPORT DESIGN	8-1
8.1	Inputs for Ground Support Design	8-1
8.1.1	In Situ Stress Relief and Ground Support Loading	8-1
8.1.2	Rock Mass Failure Mechanisms	8-[illegible]
8.1.3	Functional Requirements of Ground Support	8-[illegible]
8.1.4	Ground Support Material Behavior	8-5
8.1.5	Ground Support Failure Mechanisms	8-5
8.2	Ground Support Design Analysis	8-6
8.2.1	Uncoupled Analysis	8-7
8.2.2	Coupled Analysis	8-7
8.3	Ground Support Evaluation	8-7
9.0	FINAL DESIGN EVALUATIONS	9-1
9.1	Evaluation of Final Design	9-1
9.2	Final Modifications	9-1
9.3	Final Design Specifications	9-1
9.4	Field Procedures	9-1
10.0	SUMMARY OF METHODOLOGY	10-1
11.0	DEVELOPMENT OF DRIFT DESIGN METHODOLOGY	11-1

TABLE OF CONTENTS (Concluded)

Section | Page

12.0 PRELIMINARY APPLICATION OF DRIFT DESIGN METHODOLOGY AT YMP 12-1

12.1 Establish Functional Requirements, Performance Goals and Develop Drift Stability Requirements 12-1
12.2 Establish Site Characteristics and Credible Range for Design 12-1
12.2.1 Rock Mass Quality 12-3
12.2.2 Properties for the Compliant Joint Model 12-7
12.2.3 Elasto-Plastic Mechanical Properties 12-12
12.2.4 Thermal Properties 12-15
12.3 Repository Layout 12-15
12.4 Design Basis Loads 12-15
12.4.1 In Situ Stresses 12-18
12.4.2 Thermal Stresses 12-18
12.4.3 Seismic Stresses 12-20
12.4.4 Combined In Situ, Thermal, and Seismic Stresses 12-21
12.4.5 Finite-Element Boundary Conditions in Drift Analysis 12-21
12.5 Develop Candidate Drift Designs and Perform Parametric/ Tradeoff Studies 12-21
12.6 Select Preliminary Drift Shapes and Sizes 12-22
12.7 Perform Analysis of Drift and Intersections 12-22
12.7.1 Empirical Analysis 12-22
12.7.2 Numerical Methods 12-31
12.7.3 Preliminary Ground Support Parameters 12-35
12.8 Evaluate Drift Design 12-36
12.9 Modify Drift Shape/Loads and Review Goals and Criteria 12-37
12.10 Ground Support Design 12-38
12.10.1 Uncoupled Analysis 12-38
12.10.2 Coupled Analysis 12-41
12.11 Final Design Evaluation 12-44

13.0 REFERENCES 13-1

APPENDIX A—Maximum Allowable Compressive Strain A-1

APPENDIX B—Repository Drift Performance Using Compliant Joint Model B-1

APPENDIX C—Information from, and Candidate Information for, the Site and Engineering Property Data Base and the Reference Information Base C-1

LIST OF TABLES

Table		Page
2-1	Output/Product From Each Design Step	2-5
3-1	Stability Performance Measures and Goals for Repository Drifts	3-4
4-1	Drift Design Stability Criteria	4-2
4-2	Safety Factor for Concrete Design Using Ultimate Strength Theory	4-4
4-3	Recommended Safety Factors for Design of Ground Support/Rock Reinforcement Components	4-4
5-1	Free-Field Strains Caused by Earthquake Events for Steep Angle of Incidence	5-4
5-2	Free-Field Strains Caused by UNE Events for Shallow Angle of Incidence	5-4
5-3	Criteria for Assessing Seismic Wave Impact Angle	5-6
6-1	Material Properties for the Elasto-Plastic Continuum Model	6-14
6-2	Material Properties for Equivalent Continuum Model and Compliant Joint Model	6-15
8-1	Suggested Percentage of Excavation-Induced Ground Deformation	8-4
12-1	Function of Drift During Phases of Repository Development	12-2
12-2	Classification Parameters and Estimated Range of Value	12-4
12-3	Level of Probability for Selected NGI Parameters	12-9
12-4	Level of Probability for Selected RMR Parameters	12-9
12-5	Final RMR Values for Levels of Probability	12-10
12-6	Fracture Frequencies Derived from Yucca Mountain Core Hole Data	12-11
12-7	Fracture Frequency and Spacing Based on RQD	12-11
12-8	Preliminary Characterization of Fracture Continuity in TSw2	12-13
12-9	Estimated Joint Continuity for Probability Level	12-13

LIST OF TABLES (Cont'd)

Table		Page
12-10	Range of Joint and Intact Rock Strength Parameters	12-13
12-11	Joint Intact Rock and Weighted Average Joint Strength Used for the CJM Model	12-14
12-12	CJM Joint Stiffness Parameters for Probability Levels	12-14
12-13	Estimated Strength of Intact Blocks	12-15
12-14	Power Law Failure Criteria for Levels of Probability	12-16
12-15	Mohr-Coulomb Failure Criteria for Various Rock Mass Quality	12-16
12-16	Rock Mass Tensile Strength for Rock Mass Quality	12-17
12-17	Rock Mass Elastic Modulus for the Range of Rock Mass Quality	12-17
12-18	Magnitude and Orientation of In Situ Principal Stresses	12-19
12-19	Thermal Stress Change Used for Midpanel Access Drift	12-19
12-20	Thermal Stress Change Used for Tuff Main Access Drift	12-20
12-21	Seismic Loads for All Drift Analysis	12-21
12-22	Combined Loads (in MPa) for Midpanel Access Drift at 100 Years	12-22
12-23	Parameters in Assessing Ground Support Requirements for Hoek Method	12-25
12-24	Rock Support Requirements Based on NGI-Q System Design Tables	12-26
12-25	Modified Q (Q^M) Adjusted for Thermal and Seismic Loads	12-27
12-26	Rock Support Requirements Based on NGI-Q System Design Tables for In Situ + Thermal + Seismic Loadings	12-28
12-27	Rock Support Pressures (MPa) Based on Equation 13 and Q^M	12-29
12-28	Standup Time Based on Bieniawski's RMR Rock Mass Rating	12-29
12-29	Maximum Extent of Failed Zone for the Tuff Main Access Drift	12-32
12-30	Maximum Extent of Failed Zone for the Midpanel Access Drift	12-33

LIST OF TABLES (Concluded)

Table		Page
12-31	Maximum Extent of Failed Zone for Waste-Emplacement Drift for In Situ Plus Thermal Loads	12-34
12-32	Maximum Extent of Failed Zone for Waste-Emplacement Drift for In Situ Plus Thermal Plus Seismic Loads	12-35
12-33	Rockbolt Support Systems Based on Numerical Analysis of Unsupported Drifts	12-36
12-34	Cases Where Maximum Allowable Compressive Strain Exceeded When Loaded by In Situ Plus Thermal Plus Seismic Stresses	12-37
12-35	Predicted Bolt Loads (MPa), Tuff Main Access Drift, Uncoupled Analysis	12-39
12-36	Predicted Shotcrete Loads (MPa), Tuff Main Access Drift, Uncoupled Analysis	12-39
12-37	Predicted Bolt Loads (MPa), Midpanel Access Drift, Uncoupled Analysis	12-40
12-38	Predicted Shotcrete Loads (MPa), Midpanel Access Drift, Uncoupled Analysis	12-40
12-39	Predicted Bolt Loads (MPa), Vertical Waste Emplacement Drift, Uncoupled Analysis	12-41
12-40	Predicted Shotcrete Loads (MPa), Emplacement Drift, Uncoupled Analysis	12-42
12-41	Comparison of Coupled and Uncoupled Shotcrete Stresses for Elastic Rock Mass	12-42
12-42	Comparison of Coupled and Uncoupled Shotcrete Stresses for Compliant Joint Rock Model	12-43
12-43	Comparison of Coupled and Uncoupled Shotcrete Stresses for Mohr-Coulomb Rock Model	12-43
12-44	Preliminary Ground Support Systems for Three Repository Drift Types	12-45

LIST OF FIGURES

Figure		Page
2-1	Summary of Drift Design Methodology	2-2
2-2	Logic Chart for Drift Design Methodology	2-3
5-1	Wavefront Angle of Incidence θ Relative to Drift	5-5
5-2	Estimation of In Situ Deformation Modulus from Classification Methods	5-10
5-3	Averaging of Hoek and Brown and Yudhbir Failure Criteria for RMR=32.5	5-12
5-4	Repository Layout (from SCP-CDR)	5-16
5-5	Exploratory Shaft Facility, Main Test Level Layout	5-17
5-6	Isometric and Profile Views of the Waste-Emplacement Panels as Modeled with STRES3D	5-18
5-7	Panel Detail for Vertical Emplacement	5-20
5-8	Drift and Ramp Cross Sections (Vertical Emplacement)	5-21
6-1	Range of Rock Mass Quality, Q, Projected for Excavation Conditions at the Repository Horizon	6-3
6-2	Approximate Support Guidelines for Underground Excavations Proposed by Hoek (1981)	6-4
6-3	Chart for Estimating Modes of Failure Around Drifts Proposed by Schmidt (1987)	6-5
6-4	Calculated Peak Particle Velocities and Acceleration and Associated Damage Observations on Underground Openings	6-6
6-5	Selection of Appropriate Rock Model for Design Analysis	6-10
6-6	Idealized Diagram Showing the Transition from Intact Rock to a Heavily Jointed Rock Mass with Increasing Sample Size	6-12
6-7	Schematic Illustrating Geometry and Loads for Calculation of Wall Support Pressure	6-18
7-1	Flowchart Illustrating Application of Drift Support Design Criteria to Drift Analysis	7-3

LIST OF FIGURES (Concluded)

Figure		Page
8-1	Illustration of Interaction of the Ground Reaction Curve and Ground Support System	8-2
12-1	RQD Data (Langkopf and Gnirk, 1986) for Four YMP Core Holes Showing an 80-ft Interval Used to Develop the Estimate of Lateral Variation	12-5
12-2	RQD Versus Cumulative Probability of Occurrence Showing Selected Levels of Probability Used for Parameter Selection	12-6
12-3	RMR Joint Frequency Parameter Versus Cumulative Frequency of Occurrence Assuming a Uniform Distribution of the Range Reported by Langkopf and Gnirk (1986)	12-8
12-4	Approximate Support Guidelines for Underground Excavations Proposed by Hoek (1981) With Range of Expected Conditions for Emplacement Drifts at the YMP	12-23
12-5	Chart for Estimating Modes of Failure Around Drifts Proposed by Schmidt (1987) With Projected Conditions for Emplacement Drift at YMP	12-23
12-6	Range of Rock Mass Quality, Q, Projected for Excavation Conditions at the Repository Horizon	12-24
12-7	Expected Conditions Shown on Barton Rock Mass Quality Design Shaft	12-30

1.0 INTRODUCTION

Sandia National Laboratories (SNL), a participant in the Yucca Mountain Site Characterization Project (YMP), is investigating the feasibility of locating a high-level nuclear waste repository at Yucca Mountain, Nevada. The conceptual design of the repository includes shafts and ramps as accesses to the repository horizon, which are 200 to 300 m below the surface within the densely welded section of the Topopah Spring Member of the Paintbrush tuff formation. At the repository level, main access and emplacement drifts will be excavated to allow disposal of the waste in either horizontally or vertically oriented boreholes. These drifts must provide safe access for waste emplacement, inspection, and maintenance following emplacement, closure, and possibly, waste retrieval. The design methodology presented in this report defines the steps for repository drift design to ensure that the drifts meet stability and other regulatory requirements through repository decommissioning.

1.1 Purpose

The purpose of this report is to define, for the underground excavations of a repository in tuff, a design methodology, establish a design criteria, and demonstrate the application of the methodology to the Yucca Mountain Site. For the purposes of this document, the design of underground excavations consists of two components: (1) the drift dimensions and shape, and (2) the ground support/rock reinforcement. Repository drift size and shape depends primarily on functional requirements, whereas the ground support/rock reinforcement depends on local geologic conditions and loadings. The ground support/rock reinforcement design can, at this stage, consist of only multiple design possibilities to be selected after local ground conditions have been established.

Not included in the drift design, but considered in the methodology, is the design of the mining, ventilation, utility, backfill, and sealing systems. The design of the emplacement borehole (borehole, liner, and plug), repository panels (layout, drift spacing, and standoff), and shafts is outside the scope of this document, although the interaction and effect on drift design are considered where appropriate. For example, density of emplaced waste [areal power density (APD)] and standoff to the waste are parameters of panel design that may require adjustment if thermal loads on the drift become excessive.

1.2 Report Organization

The report is structured to follow the application of the proposed design methodology. Chapter 2 provides a synopsis of the methodology. This is followed by chapters which describe in detail major elements of the methodology. These are:

Chapter 3—Design Requirements and Goals
Chapter 4—Drift Design Criteria
Chapter 5—Design Basis
Chapter 6—Analysis of Unsupported Drifts
Chapter 7—Drift Evaluations
Chapter 8—Ground Support Design
Chapter 9—Final Drift Evaluations and Design

A summary of the methodology is presented in Chapter 10. Chapter 11 briefly outlines how data developed from the Exploratory Shaft Facility (ESF) program will be used to enhance the design methodology. To illustrate the use of the methodology, it has been applied using the available site-specific data and the current reference repository layout. The results of this preliminary application are presented in Chapter 12.

Appendixes A and B provide example analytical results for two of the analytical models: the elasto-plastic continuum and compliant joint models (CJM). Appendix C provides examples of coupled analysis of the interaction between the rock and ground support system. These appendixes support the design study documented in Chapter 12.

TITLE I DESIGN SUMMARY REPORT
REVISION 1
DRAFT H
VOLUME 5, APPENDIX

5.11 Holmes & Narver, Inc., Nevada Nuclear Waste Storage Investigation, Exploratory Shaft Facility, "Life Safety Systems, Special Study 6A," Rev. 2

HOLMES & NARVER, INC.

Energy Support Division

NNWSI/ESF

SPECIAL STUDY NO. 6A
REVISION 2

LIFE SAFETY SYSTEMS

MAY 1988

U.S. Department Of Energy

HOLMES & NARVER, INC.
NEVADA NUCLEAR WASTE STORAGE INVESTIGATIONS/
EXPLORATORY SHAFT FACILITY

LIFE SAFETY SYSTEMS

STUDY 6A

Manager — Date 8-6-87

Technical Project Office, H&N — Date 8/6/87

DOE/WMPO — Date

REV.	DATE	DESCRIPTION OF CHANGE	ORG	CHK	ESC	MGR	TPO	WMPO
0	8/7/87	ORIGINAL	SJK					
1	12/87	Revised per letter WMPO:DHI-194	SJK					
2	5/88	Revised per letter WMPO:DHI-1438	SJK					

SPECIAL STUDY 6A
MAY 1988 REV. 2

SPECIAL STUDY 6A: LIFE SAFETY SYSTEMS

REVISION 2

EXPLORATORY SHAFT FACILITY

NEVADA NUCLEAR WASTE STORAGE INVESTIGATIONS

Work Breakdown Structure
Number 1.2.6.7.1

May 1988

Prepared By:

HOLMES & NARVER, INC.

EXPLORATORY SHAFT FACILITY

LIFE SAFETY SYSTEMS

SPECIAL STUDY 6A

Revision 2

Section	Title	Page
1.0	INTRODUCTION	1
2.0	SCOPE	1
3.0	AUTHORITY AND HISTORICAL BACKGROUND	1
4.0	APPLICABLE CODES, STANDARDS, AND REGULATIONS	2
5.0	QUALITY ASSURANCE	4
6.0	ASSUMPTIONS & CONSTRAINTS	4
7.0	STUDY DEVELOPMENT METHODOLOGY	7
8.0	CONCLUSIONS	29
9.0	RECOMMENDATIONS	31

Appendices

Appendix A	Interrelationships of Applicable Codes, Standards, and Regulations
Appendix B	Correspondence
Appendix C	Figures
Appendix D	Evacuation Plan and Requirements
Appendix E	Excerpts from Applicable Codes, Standards, and Regulations
Appendix F	Calculations
Appendix G	Reference Reports
Appendix H	Cost Estimates

EXPLORATORY SHAFT FACILITY

LIFE SAFETY SYSTEMS

SPECIAL STUDY 6A

Revision 2

1.0 INTRODUCTION

This study presents the recommendations for the Life Safety Systems at the Exploratory Shaft Facility (ESF), an integral part of the Nevada Nuclear Waste Storage Investigations (NNWSI) Project. Fire protection, alarm warning, and communications systems, and an evacuation plan will be developed. From these developments, evaluations of each system will be made. Recommendations based on these evaluations will be provided in this study.

2.0 SCOPE

This study evaluates the alternatives for life safety systems during subsurface shaft sinking, excavation, operations, and decommissioning throughout all subsurface areas of the ESF. Alternatives will be evaluated against the requirements of the applicable codes, standards, and regulations (reference Section 4.0, page 2) for the life safety system which is defined as including fire protection, alarm warning, evacuation planning, and communications. Interfaces with the Department of Energy (DOE)/Safety & Health Division (DOE/SHD); Reynolds Electrical & Engineering Co., Inc. (REECo), Occupational Safety & Fire Protection; Fenix & Scisson, Inc. (F&S); Los Alamos National Laboratories (Los Alamos); Centel Communications Systems (CCS); and Holmes & Narver, Inc. (H&N)/Safety Programs in the appropriate areas will provide relevant information to better define the life safety alternatives. The recommendations in this study will be based on the life safety requirements derived from the interfaces; the review of the applicable codes, standards, and regulations; the understanding of the hazards in the current ESF design; and on the programmatic and design requirements outlined in the Subsystem Design Requirements Document (SDRD).

3.0 AUTHORITY AND HISTORICAL BACKGROUND

Special Study 6 was originally authorized by verbal request from the Technology Development and Engineering Branch of DOE/Waste Management Project Office (DOE/WMPO), and later confirmed by a

TITLE I DESIGN SUMMARY REPORT
REVISION 1
DRAFT H
VOLUME 5, APPENDIX

5.12 Holmes & Narver, Inc., Nevada Nuclear Waste Storage Investigation, Exploratory Shaft Facility, "Communications Systems, Special Study 6B," Rev. 1

HOLMES & NARVER, INC.
ENERGY SUPPORT DIVISION

NNWSI/ESF SPECIAL STUDY NO. 6B REVISION 1

COMMUNICATION SYSTEMS
MAY 1988

U.S. Department Of Energy

HOLMES & NARVER, INC.
NEVADA NUCLEAR WASTE STORAGE INVESTIGATIONS/
EXPLORATORY SHAFT FACILITY

COMMUNICATION SYSTEMS

STUDY NUMBER 6B

REVISION 1

Manager — Date 12-31-87

Technical Project Officer, H&N — Date 6/9/88

DOE/WMPO — Date

REV.	DATE	DESCRIPTION OF CHANGE	ORG	CHK	ESC	MGR	TPO	WMPO
0	12/31/87	ORIGINAL						
1	6/9/88	REVISION 1						

SPECIAL STUDY 6
MAY 1988, REV.

Department of Energy
Nevada Operations Office
P. O. Box 98518
Las Vegas, NV 89193-8518

MAR 3 1 1988

Joseph C. Calovini
Technical Project Officer
for NNWSI
Holmes & Narver, Inc.
Suite 860
101 Convention Center Drive
Las Vegas, NV 89109

WASTE MANAGEMENT PROJECT OFFICE (WMPO) REVIEW AND COMMENTS ON HOLMES & NARVER, INC. (H&N) SPECIAL STUDY NUMBER 6B, NEVADA NUCLEAR WASTE STORAGE INVESTIGATIONS (NNWSI) PROJECT/EXPLORATORY SHAFT FACILITY COMMUNICATIONS SYSTEMS STUDY

The WMPO has completed the review of the subject study. Enclosed are the collective comments which resulted from a comment formalization meeting held on February 22, 1988.

The WMPO considers this study to be important for the basis of the NNWSI Project. As such, WMPO requests H&N to review, resolve, incorporate the comments, and revise the report. In addition, a copy of all of the comments including the respective resolutions, shall be placed into the front of the report. Each page of the study shall be marked, in the upper right hand corner with the study number, the date, and the revision number (initial issue, Revision 0). The revised report shall then be submitted to WMPO for final approval. Any data that may be used from this study in future design phases must be from the WMPO approved version.

If you have any questions regarding this matter, please call Dennis H. Irby at 295-8937.

Lester P. Skousen, Chief
Technology Development &
Engineering Branch
Waste Management Project Office

WMPO:DHI-1645

Enclosure:
H&N Communications System
Study 6B comments

SPECIAL STUDY 6B: COMMUNICATION SYSTEMS

REVISION 1

EXPLORATORY SHAFT FACILITY

NEVADA NUCLEAR WASTE STORAGE INVESTIGATIONS

WBS # 1.2.6.7.1

May 1988

Prepared by:

Holmes & Narver, Inc.

COMMUNICATION SYSTEMS

SPECIAL STUDY 6B

REVISION 1

SECTION	TITLE	PAGE
1.0	Introduction	1
2.0	Scope	1
3.0	Authority and Historical Background	2
4.0	Applicable Codes, Standards, and Regulations	2
5.0	Quality Assurance	3
6.0	Assumptions and Constraints	3
7.0	Study Development Methodology	4
8.0	Conclusions	14
9.0	Recommendations	15

APPENDICES

APPENDIX A	System Diagrams
APPENDIX B	Correspondence
APPENDIX C	Applicable Codes, Standards, and Regulations

EXPLORATORY SHAFT FACILITY

COMMUNICATION SYSTEMS

SPECIAL STUDY 6B

REVISION 1

1.0 INTRODUCTION

This study was commissioned to review, develop, and recommend communication systems to support the Exploratory Shaft Facility (ESF), an integral part of the Nevada Nuclear Waste Storage Investigations (NNWSI) Project. This was accomplished by reviewing with the users the requirements and the system needs as described in the ESF Subsystem Design Requirements Document (SDRD), Revision 1, December 1987; the Integrated Data System (IDS) Title I Preliminary Design, March 1988; the IDS Preliminary Hardware Design Document, November 1987; the Reynolds Electrical and Engineering Company, Inc. (REECo), Safety and Health Program Plan, March 1983; and revisions to these documents.

2.0 SCOPE

Special Study 6B analyzes and summarizes the communications' requirements during construction and operation of the ESF. It also provides a summary of user defined requirements that comply with the codes, standards, and regulations for communications. These requirements include: A) Department of Energy, Nevada Operations Office (DOE/NV) telephone system to provide local, long distance, and FTS voice and data communications for users of the ESF; B) Mine Plant Intercom System to provide voice/paging for mining personnel at the collar and all subsurface facilities; C) Experimenters' Intercom System to provide voice communications between subsurface experimenters and other organizational operations in both subsurface and external facilities; D) Closed Circuit Television System (CCTV) to provide visual surveillance of the critical locations to ensure safe operation by the hoist operators.

TITLE I DESIGN SUMMARY REPORT
REVISION 1
DRAFT H
VOLUME 5, APPENDIX

5.13 Draft "Preliminary Safety Analysis Report for the Yucca Mountain Project ESF and Site Characterization Program," Rev. 1

TABLE OF CONTENTS

VOLUME I

Page

CHAPTER 1

1.0 INTRODUCTION. 1.0- 1

1.1 General Description. 1.1- 1
1.2 Identification of Agents and Contractors 1.2- 1
1.2.1 Yucca Mountain Project Office (Project Office). . . 1.2- 1
1.2.2 Technical and Management Support Services (T&MSS) Contractor. 1.2- 1
1.2.3 Raytheon Services Nevada (RSN) 1.2- 1
1.2.4 Los Alamos National Laboratory (LANL) 1.2- 3
1.2.5 Sandia National Laboratories (SNL). 1.2- 3
1.2.6 United States Geological Survey (USGS). 1.2- 3
1.2.7 Lawrence Livermore National Laboratory (LLNL) . . . 1.2- 3
1.2.8 Reynolds Electrical and Engineering Company, Inc. (REECo). 1.2- 4
1.3 Identificacion of DOE Orders 1.3- 1

CHAPTER 2

2.0 SUMMARY 2.1- 1

2.1 Summary of Safety Analysis Report. 2.1- 1
2.1.1 Introduction. 2.1- 1
2.1.2 Site. 2.1- 1
2.1.3 Principal Design Criteria 2.1- 4
2.1.4 Facility Description. 2.1- 5
2.1.5 Process Operation Description 2.1- 9
2.1.6 Safety Systems and Features 2.1-11
2.1.7 Waste Management. 2.1-16
2.1.8 Facility Safety Programs. 2.1-18
2.1.9 Analysis of Normal Operations 2.1-18
2.1.10 Accident Analysis 2.1-19
2.2 Risk Assessment. 2.2- 1
2.2.1 Risks from Normal Operations. 2.2- 1
2.2.2 Accident Analysis 2.2- 7
2.3 Conclusion 2.3- 1

CHAPTER 3

3.0 SITE. 3.1- 1

3.1 Site Location and Description. 3.1- 1
3.2 Demography 3.2- 1
3.2.1 Amargosa Valley 3.2- 1

TABLE OF CONTENTS (continued)

	Page
3.2.2 Beatty	3.2- 4
3.2.3 Pahrump	3.2- 5
3.2.4 Indian Springs	3.2- 6
3.3 Uses of Nearby Land and Water	3.3- 8
3.4 Nearby Facilities	3.4- 1
3.5 Meteorology	3.5- 1
3.5.1 Regional Climatology	3.5- 1
3.5.2 Local Meteorology	3.5-14
3.5.3 Meteorological Measurement Program	3.5-16
3.6 Surface Hydrology	3.6- 1
3.7 Subsurface Hydrology	3.7- 1
3.8 Geology	3.8- 1
3.8.1 Physiography	3.8- 1
3.8.2 Stratigraphy and Lithology	3.8- 4
3.8.3 Tectonic Setting and Structural Geology	3.8-11
3.8.4 Other Geologic Features and Conditions Which Could Affect Facility Structures	3.8-20
3.9 Seismicity	3.9- 1
3.9.1 Design Basis Earthquake	3.9- 1
3.9.2 Vibratory Ground Motion	3.9- 1
3.9.3 Behavior of the Site During Prior Earthquakes	3.9- 2
3.9.4 Static and Dynamic Engineering Properties of Materials Underlying the Site	3.9- 4
3.9.5 Earthquake History	3.9- 4
3.9.6 Historic Earthquakes of Greatest Magnitudes	3.9-14
3.9.7 Response Spectrum for Maximum Vibratory Acceleration	3.9-14
3.9.8 Evidence for Fault Offset	3.9-16
3.9.9 Correlation of Earthquakes with Faults	3.9-16
3.9.10 Earthquake Likelihood	3.9-22
3.10 Material or Scientific Resources	3.10- 1
3.11 Relevant Institutional Data	3.11- 1
3.12 Local Institutional Data	3.12- 1

CHAPTER 4

4.0 PRINCIPAL DESIGN CRITERIA	4.0- 1
4.1 Classification Scheme	4.1- 1
4.1.1 Classification of Surface Facilities	4.1- 1
4.1.2 Classification of Subsurface Structutes, Systems, and Components	4.1- 1
4.1.3 Classification Scheme for Characterization Tests and the Integrated Data System	4.1- 2
4.2 Surface Facilities	4.2- 1
4.2.1 Facility Design Criteria	4.2- 1
4.2.2 Facility Safety Systems Design Criteria	4.2- 4
4.2.3 Process Safety Systems Design Criteria	4.2- 7

TABLE OF CONTENTS (continued)

Page

4.3 Subsurface Facility. 4.3- 1
4.3.1 Facility Design Criteria. 4.3- 1
4.3.2 Facility Safety Systems Design Criteria 4.3- 1
4.3.3 Process Safety Systems Design Criteria. 4.3- 4
4.4 Test and Integrated Data System (IDS). 4.4- 1
4.4.1 Facility Design Criteria. 4.4- 1
4.4.2 Facility Safety Systems Design Criteria 4.4- 6
4.4.3 Process Safety Systems Design Criteria. 4.4- 6

CHAPTER 5

5.0 FACILITY DESCRIPTION. 5.0- 1

5.1 Summary Description. 5.1- 1
5.1.1 General Site Layout (Surface) 5.1- 1
5.1.2 General Subsurface Layout 5.1- 1
5.1.3 Exploratory Shaft Facility (ESF) Principles of Operation. 5.1- 1
5.2 Surface Facilities 5.2- 1
5.2.1 Facility Plan and Construction. 5.2- 1
5.2.2 Surface Support Facilities 5.2- 2
5.2.3 Facilities Common to Both Portal Areas 5.2- 8
5.2.4 North Portal Area Surface Facilities 5.2-10
5.2.5 South Portal area Surface Facilities 5.2-12
5.2.6 Facility Safety Systems and Features. 5.2-13
5.3 Subsurface Facilities 5.3- 1
5.3.1 Facility Plan and Construction 5.3- 1
5.3.2 Subsurface Utilities 5.3- 1
5.3.3 Facility Safety Systems and Features 5.3- 4
5.4 Test and Integrated Data System (IDS). 5.4- 1
5.4.1 Facility Plan and Construction. 5.4- 1

VOLUME II

CHAPTER 6

6.0 PROCESS/OPERATION DESCRIPTION 6.0- 1

6.1 Surface Facility 6.1- 1
6.1.1 Operation Description 6.1- 1
6.1.2 Principles of Operation 6.1- 1
6.1.3 Mechanical Systems. 6.1- 1
6.1.4 Portal Control Center 6.1- 1
6.1.5 Safety Systems and Features 6.1- 1
6.1.6 Electrical Systems and Utilities 6.1- 2

TABLE OF CONTENTS (continued)

	Page
6.2 Subsurface Facility	6.2- 1
6.2.1 Operation Description	6.2- 1
6.2.2 Principles of Operation	6.2- 4
6.2.3 Mechanical Systems	6.2- 4
6.2.4 Chemical Process Systems	6.2-13
6.2.5 Process Support Systems	6.2-13
6.2.6 Control Room	6.2-13
6.2.7 Sampling	6.2-13
6.2.8 Product Handling	6.2-13
6.2.9 Safety Systems and Features	6.2-14
6.2.10 Electrical Systems and Utilities	6.2-14
6.3 Test Activities	6.3- 1
6.3.1 Operation Description	6.3- 1
6.3.2 Integrated Data Systems (IDS)	6.3-52
6.3.3 Principles of Operation	6.3-54
6.3.4 Mechanical Systems	6.3-56
6.3.5 Chemical Process Systems	6.3-59
6.3.6 Process Support Systems	6.3-60
6.3.7 Control Room	6.3-60
6.3.8 Sampling	6.3-60
6.3.9 Product Handling	6.3-60
6.3.10 Safety Systems and Features	6.3-60
6.3.11 Electrical Systems and Utilities	6.3-61

CHAPTER 7

7.0 SAFETY SYSTEMS AND FEATURES	7.0- 1
7.1 Surface Facility	7.1- 1
7.1.1 Summary of Safety Systems and Features	7.1- 1
7.1.2 System Selection Criteria	7.1- 1
7.1.3 Facility Integrity Description	7.1- 1
7.1.4 Facility Safety Systems Descriptions	7.1- 3
7.1.5 Process/Operation Safety Systems	7.1- 3
7.2 Subsurface Facility	7.2- 1
7.2.1 Summary of Safety Systems and Features	7.2- 1
7.2.2 System Selection Criteria	7.2- 1
7.2.3 Facility Integrity Description	7.2- 4
7.2.4 Facility Safety Systems Descriptions	7.2- 5
7.2.5 Process/Operation Safety Systems	7.2-11
7.3 Test Activities	7.3- 1
7.3.1 System Selection Criteria	7.3- 1
7.3.2 Facility Integrity Description	7.3- 2
7.3.3 Facility Safety Systems Descriptions	7.3- 2
7.3.4 Process/Operation Safety Systems	7.3- 4

TABLE OF CONTENTS (continued)

Page

CHAPTER 8

8.0 WASTE MANAGEMENT. 8.0- 1

8.1 Gaseous Wastes 8.1- 1
8.2 Liquid Waste 8.2- 1
8.3 Solid Waste. 8.3- 1

CHAPTER 9

9.0 FACILITY SAFETY PROGRAMS. 9.0- 1

9.1 Radiation Protection 9.1- 1
9.2 Criticality Safety 9.2- 1
9.3 Industrial Hygiene 9.3- 1
9.4 Industrial Safety. 9.4- 1
9.4.1 Laboratory Safety 9.4- 1
9.4.2 Industrial Safety Programs. 9.4- 1
9.5 Fire Protection. 9.5- 1
9.5.1 General 9.5- 1
9.5.2 Training. 9.5- 2
9.5.3 Inspections and Drills. 9.5- 2
9.5.4 Control of Flammable and Combustible Materials. . . 9.5- 2
9.5.5 Control of Ignition Sources 9.5- 2
9.5.6 Summary 9.5- 3
9.6 Environmental Monitoring 9.6- 1
9.6.1 Air Quality/Meteorology 9.6- 1
9.6.2 Radiological Monitoring 9.6- 2
9.6.3 Water Resource Monitoring 9.6- 3

CHAPTER 10

10.0 ANALYSIS OF NORMAL OPERATIONS. 10.0- 1

10.1 Methodologies. 10.1- 1
10.1.1 Methodology for the Analysis of Test and Integrated Data System (IDS) Normal Operations. 10.1- 1
10.2 Surface Facilities 10.2- 1
10.3 Subsurface Facilities. 10.3- 1
10.3.1 Sources of Impacts from Normal Operations. . . . 10.3- 1
10.3.2 Analysis 10.3- 1
10.3.3 Results and Conclusions. 10.3- 7

TABLE OF CONTENTS (continued)

Page

10.4 Test Activities 10.4- 1

CHAPTER 11

11.0 ACCIDENT ANALYSIS. 11.0- 1

11.1 Methodology(s) 11.1- 1
11.2 Accident Analysis for Surface Facilities 11.2- 1
11.2.1 Methodology(s) 11.2- 1
11.2.2 Accident Identification. 11.2-18
11.2.3 Accident Characterization. 11.2-18
11.2.4 Design Basis Accidents 11.2-22
11.2.5 Results and Conclusions for Surface Facilities 11.2-22
11.3 Accident Analysis for Subsurface Facility. 11.3- 1
11.3.1 Methodology. 11.3- 1
11.3.2 Hazard Identification. 11.3- 3
11.3.3 Hazard Characterization. 11.3- 6
11.3.4 Accident Scenarios 11.3- 9
11.3.5 Design Basis Accidents 11.3-10
11.4 Accident Analysis for Test and Integrated Data System (IDS) 11.4- 1
11.4.1 Methodology. 11.4- 2
11.4.2 Hazard Identification. 11.4-18
11.4.3 Hazard Characterization. 11.4-18
11.4.4 Accident Scenarios 11.4-28
11.4.5 Design Basis Accidents 11.4-30
11.4.6 Results and Conclusions. 11.4-30

CHAPTER 12

12.0 CONDUCT OF OPERATIONS. 12.0- 1

12.1 Organizational Structure 12.1- 1
12.1.1 Test Manager 12.1- 1
12.1.2 Construction Manager 12.1- 1
12.1.3 Principal Investigators. 12.1- 3
12.1.4 Quality Assurance Manager. 12.1- 3
12.2 Inspection and Testing 12.2- 1
12.3 Training 12.3- 1
12.4 Procedures 12.4- 1
12.5 Records. 12.5- 1
12.6 Emergency Planning 12.6- 1
12.7 Audits, Appraisals, and Reviews. 12.7- 1
12.7.1 Readiness Reviews. 12.7- 1

TABLE OF CONTENTS (continued)

Page

12.7.2 Quality Assurance Audits 12.7- 1
12.7.3 Environmental Safety and Health Audits 12.7- 1
12.8 Configuration Management 12.8- 1

CHAPTER 13

13.0 OPERATIONAL SAFETY REQUIREMENTS. 13.0- 1

13.1 Surface Facility 13.1- 1
13.2 Subsurface Facility. 13.2- 1
13.2.1 Safety Limits and Limiting Control Settings. . . 13.2- 1
13.2.2 Limiting Conditions for Operation. 13.2- 3
13.2.3 Surveillance Requirements. 13.2- 5
13.2.4 Design Features. 13.2- 6
13.2.5 Administrative Controls. 13.2- 7
13.3 Test and Integrated Data System (IDS). 13.3- 1
13.3.1 Safety Limits and Limiting Control Settings. . . 13.3- 1
13.3.2 Limiting Conditions for Operation. 13.3- 1
13.3.3 Surveillance Requirements. 13.3- 1
13.3.4 Design Features. 13.3- 1
13.3.5 Administrative Controls. 13.3- 1

CHAPTER 14

14.0 QUALITY ASSURANCE. 14.1- 1

14.1 Organization of the Yucca Mountain Project with Respect to Quality Assurance (QA). 14.1- 1
14.1.1 Raytheon Services Nevada (RSN). 14.1-10
14.1.2 Holmes & Narver, Inc. (H&N). 14.1-10
14.1.3 Reynolds Electric and Engineering Company (REECo). 14.1-11
14.1.4 Los Alamos National Laboratory (LANL). 14.1-11
14.1.5 Lawrence Livermore National Laboratory (LLNL). . 14.1-11
14.1.6 Sandia National Laboratories (SNL) 14.1-11
14.1.7 United States Geological Survey (USGS) 14.1-16
14.2 Quality Assurance (QA) 14.2- 1

CHAPTER 15

Open Items from October 1989 Review. 15.1- 1

TABLE OF CONTENTS (continued)

VOLUME III

	Page
APPENDIX A	
Surface Facility Analysis	A- 1
Accident Scenarios	A- 2
Design Basis Accidents	A-168
Safety and Health Standards	A-170
APPENDIX B	
Subsurface Facility Analysis	B- 1
B.1 Mining Accident Data	B- 2
B.2 Credible Accident Scenarios	B- 19
B.3 Safety and Health Standards	B-204
APPENDIX C	
Testing and IDS Analysis	C- 1
Accident Analysis Summaries	C- 36
APPENDIX D	
Glossary and Acronyms	D- 1
APPENDIX E	
References	E- 1

LIST OF FIGURES

Figure	Title	Page
1.1-1	Exploratory studies facility location	1.1- 2
1.1-2	Exploratory studies facility Concept 30 Design	1.1- 3
1.2-1	Project organization	1.2- 2
2.1-1	ESF conceptual arrangement	2.1- 7
2.2-1	Scenarios distributed over risk matrix (surface facilities)	2.2- 2
2.2-2	Subsurface scenarios distributed over risk matrix	2.2- 8
2.2-3	Distribution of risks from test activities	2.2-11
3.1-1	The site (BLM Surface Management Status Map, 1978, Beatty Nevada Quadrangle)	3.1- 3
3.1-2	Southern Nye County, the proposed repository, and the nearby communities	3.1- 5
3.5-1	General location, Yucca Mountain Project	3.5- 2
3.5-2	Major tectonic provinces of the western United States . .	3.5- 3
3.5-3	Topographical map of land forms in Nevada	3.5- 3
3.5-4	Boundaries of basins and directions of NTS surface water drainage	3.5- 4
3.5-5	Canyons, channels, and washes in the vicinity of Yucca Alluvial Site	3.5- 5
3.5-6	Wind-rose graphs	3.5- 9
3.5-7	Tornadoes and high wind probabilities	3.5-12
3.5-8	Weather observations network and stations locator at the Nevada Test Site	3.5-17
3.6-1	Hydrographic study area	3.6- 2
3.6-2	Flood-prone area in the vicinity of Fortymile Wash. . . .	3.6- 3
3.6-3	ESF Site Locations showing 100-yr flood level and probable maximum flood (PMF) level	3.6- 4

LIST OF FIGURES (continued)

Figure	Title	Page
3.7-1	Hydrogeologic study area showing three ground-water subbasins	3.7- 2
3.7-2	Hydrogeologic stratigraphy	3.7- 3
3.8-1	Boundaries and larger subprovinces of the Basin and Range physiographic province	3.8- 2
3.8-2	Physiographic features of Yucca Mountain and surrounding region	3.8- 3
3.8-3	Generalized regional stratigraphic column showing geologic units in the Nevada Test Site area	3.8- 5
3.8-4	Geologic index map of the southern Great Basin in Arizona, California, and Nevada	3.8- 6
3.8-5	Geologic map of Yucca Mountain with approximate outline of primary repository area indicated by dashed line	3.8- 8
3.8-6	Generalized volcanic and thermal/mechanical stratigraphy for Yucca Mountain	3.8- 9
3.8-7	Distribution of late Cenozoic extensional faults and a few major strike-slip faults in western North America and present-day lithospheric plate boundaries	3.8-12
3.8-8	Map of the southern Great Basin showing major Basin-Range faults, tilt of major structural blocks, and attitudes of Tertiary rocks	3.8-15
3.8-9	Southern end of southern Nevada volcanic field showing possible locations of calderas in the vicinity of Yucca Mountain	3.8-16
3.8-10	Generalized map of Yucca Mountain and vicinity showing calderas and late Cenozoic normal faults and a few strike-slip faults	3.8-17
3.8-11	Approximate east-west hydrogeologic cross section modified from Montazer and Wilson (1984) showing faults at and near Yucca Mountain as mapped by Scott and Bonk (1984)	3.8-19

LIST OF FIGURES (continued)

Figure	Title	Page
3.8-12	Locations of corehole samplings for the Yucca Mountain Project	3.8-21
3.8-13	Location of proposed exploratory shaft facility	3.8-25
3.8-14	Site plan for exploratory studies facility	3.8-26
3.8-15	Schematic cross-section of exploratory shafts 1 and 2 (DOE, 1988)	3.8-28
3.9-1	Seismicity of southwestern United States, based on historical and instrumental data through 1978, M $\geq$ 4.0 of Modified Mercalli intensity 1 $\geq$ V, from USGS sources	3.9- 6
3.9-2	Seismicity of the southwestern United States, showing relation of epicenters to major strike-slip faults	3.9- 9
3.9-3	Historical seismicity of the southern Great Basin, 1968 through 1978, for M > 4; from historical catalog (Meremonte and Rogers, 1987)	3.9-10
3.9-4	Historical seismicity of the southern Great Basin, 1968 through 1978, for M > 4; from historical catalog (Meremonte and Rogers, 1987)	3.9-11
3.9-5a	Seismicity of the southern Great Basin, August 1, 1978, through December 31, 1983, from Southern Great Basin Seismic Network catalog (Rogers et al., 1987)	3.9-12
3.9-5b	Seismicity in the southern Great Basin for the period August 1, 1978, through December 31, 1986. Modified from Harmsen and Rogers (1987)	3.9-13
3.9-6	Five percent-damped uniform-hazard response spectra for rock sites, horizontal component, for recurrence rates of 500, 2,000, and 10,000 years	3.9-15
3.9-7	Quaternary normal faults and postulated detachment faults on and near Yucca Mountain	3.9-20
4.4-1	Construction, design response spectra, horizontal component	4.4- 4
4.4-2	Operation, design response spectra, horizontal component	4.4- 5

LIST OF FIGURES (continued)

Figure	Title	Page
5.1-1	ESF General Arrangement	5.1- 2
5.1-2	ESF Subsurface Access General Arrangement	5.1- 3
5.3-1(a)	ESF TS/CH Preliminary Ventilation	5.3- 3
5.3-1(b)	ESF Development Ventilation Sequence	5.3- 4
5.3-1(c)	ESF Face Ventilation	5.3- 5
6.2-1	ESF Material Flow Diagram	6.2- 3
6.2-2(a)	Ramp Construction Sequence	6.2- 9
6.2-2(b)	Ramp Station Construction Sequence	6.2-10
8.0-1	Hazardous materials management decision process	8.0- 2
9.0-1	Implementation documents for safety and health programs	9.0- 2
9.0-2	Project hierarchy of documents	9.0- 3
11.1-1	Risk matrix	11.1- 5
11.2-1	Conceptual overview of risk methodology	11.2- 2
11.2-2	Overview of safety analysis process	11.2- 3
11.2-3	Scenarios distributed over risk matrix for surface activities	11.2-19
11.3-1	Subsurface accident scenarios distributed over risk matrix	11.3-11
11.4-1	Risk development methodology	11.4- 3
11.4-5	Summary of accident scenarios	11.4-15
11.4-6	Accident scenarios versus tests	11.4-16
11.4-3	Risk summary	11.4-17
12.1-1	Organization relationships during design and testing in the ESF	12.1- 2

LIST OF FIGURES (continued)

Figure	Title	Page
14.1-1	Yucca Mountain Site Characterization Project organization	14.1- 2
14.1-2	Yucca Mountain Site Characterization Project Office organization	14.1- 3
14.1-3	Yucca Mountain Site Characterization Project Office QA organization	14.1- 6
14.1-4	SAIC/T&MSS organization	14.1- 9
14.1-5	Raytheon Services Nevada Organization	14.1-12
14.1-6	REECo Yucca Mountain Project organization	14.1-13
14.1-7	LANL Yucca Mountain Project organization.	14.1-14
14.1-8	SNL Nuclear Waste Repository Technology Department organization	14.1-15
14.1-9	USGS Yucca Mountain Project organization.	14.1-17
14.2-1	Criteria for Quality Assurance.	14.2- 2

LIST OF TABLES

Table	Title	Page
1.3-1	Applicable DOE Orders and notices	1.3- 2
2.1-1	ESF Conceptual Arrangement	2.1- 7
2.1-2	Subsurface design features critical to safety	2.1- 8
2.2-1	Hazards during normal subsurface operations	2.2- 4
2.2-2	List of identified hazards associated with Test Activities	2.2- 5
2.2-3	Hazards versus tests	2.2- 6
3.2-1	Demographic characteristics of southern Nye County, 1980	3.2- 2
3.2-2	Demographic characteristics of southern Nye County, 1985	3.2- 3
3.2-3	Amargosa Valley School Enrollment, 1980-1988	3.2- 4
3.5-1	Ten-year climatological summary (1962-1971) Yucca Flat, Nevada-Nevada Test Site	3.5- 7
3.8-1	Reference values for intact rock and rock-mass mechanical properties and fracture properties for use in analysis of rock-mass mechanical behavior	3.8-23
3.8-2	Recommended values for thermal and physical properties of thermal/mechanical units	3.8-24
3.9-1	Peak ground accelerations at the surface used in conceptual design of the ESF	3.9- 2
3.9-2	Dynamic rock properties for seismic design	3.9- 5
3.9-3	Significant earthquakes in or near the southern Great Basin	3.9- 7
3.9-4	Summary of Quaternary faulting at and near Yucca Mountain	3.9-17
3.9-5	Preliminary fault data for faults showing Quaternary offset	3.9-21

LIST OF TABLES (continued)

Table	Title	Page
3.12-1	Fire protection services in Beatty, Pahrump, Amargosa Valley, and Indian Springs	3.12- 2
3.12-2	Ambulance services in Beatty, Pahrump, Amargosa Valley, and Indian Springs	3.12- 3
3.12-3	Police protection services in Beatty, Pahrump, Amargosa Valley, and Indian Springs	3.12- 4
4.3-1	Primary design criteria for facility structures	4.3- 2
4.3-2	Primary design criteria for facility safety system and equipment	4.3- 3
4.4-1	Design criteria parameter summary	4.4- 3
6.3-1	Exploratory studies facility tests	6.3- 2
6.3-2	ESF test matrix items	6.3-57
7.2-1	Safety classification and scenario ID numbers for facility structures, systems, and equipment	7.2- 2
7.2-2	Safety related function of facility structures	7.2- 5
7.2-3	Safety related function of facility systems and equipment	7.2- 6
10.1-1	List of key words	10.1- 3
10.3-1	Normal operation source identification	10.3- 2
10.3-2	Normal operation hazardous materials	10.3- 3
10.3-3	Hazards during normal operations	10.3- 4
11.1-1	Frequency rating scale	11.1- 2
11.1-2	Consequence rating and definition	11.1- 3
11.1-3	Identification numbering system	11.1- 6
11.2-1	List of scenarios retained for evaluation	11.2- 5
11.2-2	Scenarios grouped by consequence level	11.2- 8

LIST OF TABLES (continued)

Table	Title	Page
11.2-3	Scenarios grouped by frequency level	11.2-11
11.2-4	Highest risk contributors	11.2-14
11.3-1	Accident source identification list	11.3- 4
11.3-2	Hazardous materials in accidents	11.3- 5
11.3-3	Initiating event frequency	11.3-14
11.4-1	Exploratory studies facilities tests	11.4- 4
11.4-2	List of key words	11.4- 5
11.4-3	List of identified potential hazards	11.4- 7
11.4-4	Hazards versus tests	11.4-11
11.4-5	Summary of accident scenarios	11.4-15
11.4-6	Accident scenarios versus tests	11.4-16
11.4-7	Scenarios with associated hazards	11.4-19
11.4-8	Bounding accident envelopes	11.4-29
11.4-9	Design basis accidents	11.4-31

1.0 INTRODUCTION

The Nuclear Waste Policy Act of 1982 (NWPA), as revised in 1987 (The Act) establishes the process for the selection of suitable locations for the disposal of spent nuclear fuel and high-level radioactive waste within geologic repositories.

The exploratory studies facility (ESF) will be a research facility that supports testing requirements for the site characterization of Yucca Mountain as the potential site for a high-level radioactive waste repository. The ESF will be constructed to comply with a 10 CFR Part 60 requirement to perform a program of in situ exploration and testing at the depths at which wastes would be emplaced prior to submittal for a construction authorization for a repository. The Yucca Mountain site is located on U.S. Government land in southern Nevada, about 90 mi (145 km) northwest of Las Vegas. The location and characteristics of the proposed site are described in detail in the Yucca Mountain Project Site Characterization Plan (SCP) (DOE, 1988).

The purpose of this Preliminary Safety Analysis Report (PSAR) is to document the results of the safety analysis evaluation of the ESF Title I design at 100 percent completion. It is intended for use by management to support authorization to construct the ESF. It will document the evaluations necessary to show that adequate measures are included in the design for

1. Protection of the health and safety of the public and the ESF work force.

2. Protection of the environment.

3. Completion of Project mission objectives without unreasonable delays or data losses caused by mishap or failure to observe applicable codes, guides, and standards.

This PSAR was prepared in accordance with U.S. Department of Energy (DOE) Order 5481.1B, Safety Analysis and Review System, as a safety review of the process for design and construction of the subsurface facilities, and interface of the testing program. The objectives of the safety analysis are as follows:

1. Systematically identify potential hazards.
2. Analyze potential consequences of these hazards.
3. Identify measures taken to eliminate, control, or mitigate hazards.
4. Analyze and evaluate potential accidents and associated risks.
5. Assess risks.

These objectives were accomplished by performing a risk assessment that provided a systematic analysis of the ESF safety during operation activities and data acquisition. In as much as the ESF activities support the testing requirements for the characterization of the Yucca Mountain site; the loss of data and/or the loss of ability to collect data to support the characterization effort are considered to have significant adverse effects to the Project. The hazards which could lead to these events have been identified, analyzed, and categorized similar to the traditional risks to life, property, and the environment.

The report provides a description of the site and design basis events, and a facilities and process description for the ESF. The safety and reliability analysis includes an overview of the methodology used in the analysis. All ESF subsurface structures, systems, and components have been analyzed.

The analysis covers the modified design concept No. 30 ESF surface and subsurface facilities and utilities, and the compressed air plant. It also covers construction activities such as underground development and operation, and experimental activities. The PSAR documents how mitigation methods are implemented in the ESF design during construction and experimental activities.

This report does not address the design, construction, or operation of the repository, which will be licensed and operated in accordance with the requirements of the U.S. Nuclear Regulatory Commission (NRC), except where ESF equipment or features are intended for use in the repository. The DOE Yucca Mountain Site Characterization Project Office (Project Office) is responsible for the design, construction, and operation of the ESF to provide access for detailed study of the potential host rock, as well as the overlying geologic strata. The general objectives of the ESF at Yucca Mountain are to acquire access to underground tuff horizons and to obtain necessary technical data regarding the unsaturated zone. These activities will assist in determining the suitability of the Yucca Mountain tuff media for the construction of an underground high-level civilian nuclear waste repository.

TITLE I DESIGN SUMMARY REPORT
REVISION 1
DRAFT H
VOLUME 5, APPENDIX

5.14 "Exploratory Studies Facility Title I Cost Estimate"

EXPLORATORY STUDIES FACILITY [ESF]

TITLE I COST ESTIMATE

AUGUST 1991
PREPARED FOR DOE BY
RAYTHEON SERVICES NEVADA

ESF TITLE I
ASSUMPTIONS AND OTHER DATA

8/19/91

The following assumptions and other estimating data are based on Title I drawings and spec available on June 30, 1991.

Assumptions

REECo cost adders will actually be put into effect.

The permanent underground utilities and roadbed will be installed concurrently with excavation.

There will be no delays due to poor ground conditions.

Shielded TBM's will not be required.

Rockbolts and screen will be the only required ground support with bolts on 4-foot centers.

The shaft will be blind bored and lined 25 foot in diameter.

Steel sets will not be required for ground support on the Calico Hills level.

No major water inflows will occur.

That test alcoves for RBT & Fault properties will be mined and constructed during drift excavation and will delay same; drift mapping will cause delays at the rate of 1 day for each 7 construction days.

A second generation Mobile Miner will be effective excavating on the TS level.

That TBM's will function effectively on negative grades.

That power will be available for 4 TBM's running concurrently.

That water tank construction and road paving will be subcontracted.

That underground excavation and construction will be done by a subcontractor to REECo.

That concrete aggregate will be available from the Forty Mile Wash Area.

That major surface construction equipment will be leased or rented.

Underground construction equipment and materials will be supplied to the subcontractor.

Mining requirements will dictate the location of tests alcoves.

Temporary Construction site/trailers are required.

Only FY'92 is cost constrained to $1,700,000 Site Construction dollars.

Site Preparation, access road and pad construction to the North site will start 6/30/92.

Alcove excavation will be done using controlled blasting.

It will be necessary to remove all utilities as well as the belt conveyor in the ramp or drift for a distance of about 60 feet on each side of the alcove during alcove construction.

The underground excavations will have to be supported with the rockbolts and wire mesh.

Total mobilization and demobilization of ramp/main drift utilities and alcove construction time is based on drill and blast method. If by any reason the constructor will have to apply a hydraulic splitter, the total time for alcove excavation could be much greater.

All surface construction is done on day shift working a 5-day week and all underground construction will be done on 3 shifts working a 7-day week.

Excavation rates are:

Mobile Miner		30'/day, setup time 45 days
Roadheader -	slopes < 8%	35'/day, setup time 45 days
	slopes > 8%	22'/day
TBM -	slopes < 8%	55'/day, setup time 90 days
	slopes > 8%	35'/day

Excavation rates provided in the SNL report "EXCAVATOR PERFORMANCE PREDICTIONS" as are cutter cost are correct.

All underground equipment will be sized to be moved through any ramp and/or drift without the removal of permanent utilities.

All excavation rates assume that permanent mechanical, electrical and roadbed utilities will be installed concurrently with the excavation.

Pricing

Price sources are Western Mine Engineering - Mining Cost Service, Westinghouse, Data Quest - Rental Rate Blue Book, Various Means "Cost Data" manuals, Richardsons, Keithly Industrial Systems .... etc.

Wage rates and cost adders were provided by REECo and are current as of June 1, 1991.

The subcontractor cost adder is calculated at 103% of labor cost. A small tool replacement adder (6%) is now included in REECo cost.

Roads and Pads

There are three classes of road construction:

o Improved Graded-Design for ten (10) inches of select material used for subbase, compaction of 95% and six (6) inches Type II for base course and compaction of 95%.

o Asphalt pavement-Design for eight (8) inches of Type II for base course, compacted at 95%, and (3 inches) of asphalt paving.

o Minimum improvements-Design for clearing, bladed and compacted for muck conveyor maintenance roads.

Several access roads require 36-inch diameter corrugated metal pipe sixty-six lineal feet long across the road for drainage at several locations.

The Muck Storage Pad is located for use of one common area for "TS North" and "TS South Portals" and Optional Shaft. The size is approximately 44 acres. Drainage pipe 6 inches, 7,880 LF and 1,980 LF of 8-inch drainage line is required and also an underliner with 40 mil cover over entire area. The pad will be utilized for all Underground Muck Excavation Storage.

The Top Soil Pad is located for use of one common area for "TS North" and "TS South Portals" and "Optional Shaft." The size is approximately 15 acres. The pad will be utilized for storing top soil removed from all surface excavation of site and road work and utility.

The Explosives Storage Pad will be located in one common area for "TS North" and "TS South Portals" and "Optional Shaft." The size is approximately 1.2 acres. The pad will be utilized for storing all explosives to be used for the Exploratory Studies Facilities (ESF) project.

The TS North Portal Pad size is approximately 500 x 900 square feet (10.3) acres. Drill and blasting volume is approximately 68,600 cubic yards and 17,200 cubic yards will be ripped with dozer. Total cubic yards of fill to construct the TS North Portal is approximately 89,800 cubic yards, including 82,100 cubic yards of Type II fill transported from borrow pit area. Drill and blasting estimates are 80% and dozer ripping are 20% based on preliminary studies conducted by the U. S. Bureau of Reclamation.

The TS South Portal Pad size is approximately 530 x 605 square feet (7.4) acres. Drill and blasting volume is approximately 160,800 cubic yards and 40,200 cubic yards will be ripped with dozer. Total cubic yards of fill to construct the TS South Portal is approximately 201,000 cubic yards, including 61,100 cubic yards of Type II fill transported from borrow pit area. Drill and blasting estimates are 80% and dozer ripping are 20% based on preliminary studies conducted by the U. S. Bureau of Reclamation.

The Optional Shaft Pad size is approximately 200 x 400 square feet (1.8) acres. Drill and blasting volume is approximately 73,625 cubic yards and 18,405 cubic yards will be ripped with dozer. Total cubic yards of fill to construct the Optional Shaft Pad is approximately 143,921 cubic yards, including 16,000 cubic yards of Type II fill transported from borrow pit area. Drill and blasting estimates are 80% and dozer ripping are 20% based on preliminary studies conducted by the U. S. Bureau of Reclamation.

Water Utilities

"TS North Portal," "TS South Portal," and "Optional Shaft" will be provided with water from Well J-13. It is assumed that all three sites will have their own booster pumping stations and buildings located at the existing subdock area. All three (ESF) sites will be provided with a forebay tank, chlorination system, 50,000 gallon water storage tank for potable water and 200,000 gallon water storage tank for fire protection and construction water.

Batch Plant

One concrete batch plant, complete with aggregate crusher and screening plant, will be set up at existing subdock area and will be equipped with one 20,000 gallon forebay tank to provide concrete for all three (ESF) construction sites. (TS North, TS South Portals and Optional Shaft). An existing 69KV underbilt line is across from the Subdock. New power lines and transformers need to be constructed for the new Batch Plant.

Waste Water and Sewage

One (1) lined Mine Waste Water Evaporative pond will be constructed and located in one common area for all three (ESF) construction sites. (TS North, TS South Portals and Optional Shaft).

Existing subdock construction trailers will be provided with one (1) 4,000 gallon septic tank system for all office trailers.

Buildings

All buildings on the TS North, TS South Portals and Optional Shaft pad will be protected by a wet fire sprinkler system.

All buildings will be set on reinforced concrete foundations, based on seismic zone 3.

All building insulation for ceilings will be rated 32R and walls will be rated 19R.

Trailers

One (1) trailer will bel located on the Optional Shaft pad.

Eighteen trailers will be located at subdock location. Power, water and sewage systems are provided.

All power, water, and sewage septic tanks will have to be provided and constructed at Subdock for all new facilities.

Power

This estimate includes the costs of secondary site and downhole power; the primary power upgrade (1.2.7.3) is not included.

A new 138KV power line will be provided and constructed from Jackass Flat substation. Three new separate primary pole lines will be constructed for all the sites along with new substations and switchgear equipment. This work will be constructed under WBS 1.2.7 All secondary power from sites and shaft sites will be constructed under WBS 1.2.6.

ESF TITLE I
ACCOUNT SUMMARY
W.B.S. 1.2.6

8/23/91 11:13

ITEM	W.B.S.	F.T.E.	CAPITAL EQUIP.	CONSTRUCTION	CONTINGENCY	PERCENT	TOTAL COST
YUCCA MT. EXPLORATORY FACILITY	1.2.6	1177	$163,066,884	$530,483,842	$72,152,274	10%	$765,703,001
MANAGEMENT & INTEGRATION	1.2.6.1	NA	NA	$135,050,500	NA	NA	$135,050,500
MANAGEMENT, PLANNING, & TECHNICAL	1.2.6.1.1	NA	NA	$84,880,500	NA	NA	$84,880,500
QUALITY ASSURANCE	1.2.6.1.2	NA	NA	$9,263,500	NA	NA	$9,263,500
SAFETY ANALYSIS	1.2.6.1.3	NA	NA	$3,862,500	NA	NA	$3,862,500
TITLE III ENGINEERING	1.2.6.1.4	NA	NA	$21,370,500	NA	NA	$21,370,500
TECHNICAL ENGINEERING MANAGEMENT	1.2.6.1.5	NA	NA	$5,439,000	NA	NA	$5,439,000
TEST MANAGEMENT	1.2.6.1.6	NA	NA	$10,234,500	NA	NA	$10,234,500
SITE PREPARATION	1.2.6.2	179	$13,978,542	$39,000,843	$9,011,736	17%	$61,991,122
DESIGN	1.2.6.2.0	NA	NA	$1,822,000	NA	NA	$1,822,000
ROADS AND PADS	1.2.6.2.1	103		$22,747,663	$3,639,626	16%	$26,387,290
SURFACE UTILITIES & COMMUNICATIONS	1.2.6.2.2	76	$13,978,542	$14,431,180	$5,372,110	19%	$33,781,832
SURFACE FACILITIES	1.2.6.3	42	$4,266,668	$9,206,458	$2,506,791	19%	$15,979,916
DESIGN	1.2.6.3.0	NA	NA	$1,392,000	NA	NA	$1,392,000
BUILDINGS	1.2.6.3.1	42	$4,266,668	$7,814,458	$2,506,791	21%	$14,587,916
NORTH ACCESS	1.2.6.4	149	$39,128,464	$28,698,718	$12,858,162	19%	$80,685,344
DESIGN	1.2.6.4.0	NA	NA	$4,020,000	NA	NA	$4,020,000
PORTAL & PLANT SETUP	1.2.6.4.1	5	$2,110,282	$1,860,950	$921,642	23%	$4,892,873
TSL EXCAVATION, UTILITIES & EQUIPMENT	1.2.6.4.2	66	$20,739,916	$12,118,801	$6,525,779	20%	$39,384,495
CHL EXCAVATION, UTILITIES & EQUIPMENT	1.2.6.4.3	57	$16,278,267	$8,780,251	$4,931,062	20%	$29,989,581
CONSTRUCTION TEST SUPPORT	1.2.6.4.4	21		$1,918,716	$479,679	25%	$2,398,395

ESF TITLE I
ACCOUNT SUMMARY
W.B.S. 1.2.6

8/23/91 11:13

ITEM	W.B.S.	F.T.E.	CAPITAL EQUIP.	CONSTRUCTION	CONTINGENCY &	PERCENT	TOTAL COST
SOUTH ACCESS	1.2.6.5	172	$40,246,242	$32,256,982	$13,861,568	19%	$86,364,793
DESIGN	1.2.6.5.0	NA	NA	$3,884,000	NA	NA	$3,884,000
PORTAL & PLANT SETUP	1.2.6.5.1	10	$1,883,392	$2,672,261	$1,059,117	23%	$5,614,770
TSL EXCAVATION, UTILITIES & EQUIPMENT	1.2.6.5.2	76	$21,975,579	$13,802,444	$7,194,988	20%	$42,973,011
CHL EXCAVATION, UTILITIES & EQUIPMENT	1.2.6.5.3	73	$16,387,271	$10,721,409	$5,313,247	20%	$32,421,926
CONSTRUCTION TEST SUPPORT	1.2.6.5.4	12		$1,176,868	$294,217	25%	$1,471,085
SUBSURFACE EXCAVATIONS	1.2.6.6	503	$31,536,285	$79,852,205	$24,446,427	22%	$135,834,917
DESIGN	1.2.6.6.0	NA	NA	$4,356,000	NA	NA	$4,356,000
TOPOPAH SPRINGS LEVEL	1.2.6.6.1	347	$22,813,788	$46,786,866	$15,821,666	23%	$85,422,319
TSL CONSTRUCTION TEST SUPPORT	1.2.6.6.1.3	39		$3,418,485	$854,621	25%	$4,273,106
CALICO HILLS LEVEL	1.2.6.6.2	156	$8,722,497	$25,075,286	$7,705,470	23%	$41,503,253
CHL CONSTRUCTION TEST SUPPORT	1.2.6.6.2.2	2		$215,568	$64,670	30%	$280,238
OPTIONAL ACCESS	1.2.6.7	115	$15,365,186	$24,499,614	$5,802,324	15%	$45,667,124
DESIGN	1.2.6.7.0	NA	NA	$8,596,000	NA	NA	$8,596,000
ACCESS COLLAR & PLANT SETUP	1.2.6.7.1	10	$5,581,340	$2,907,811	$1,697,830	20%	$10,186,982
ACCESS EXCAVATION, UTILITIES & EQUIPMENT	1.2.6.7.2	64	$9,783,846	$9,539,495	$3,413,232	18%	$22,736,573
ACCESS CONSTRUCTION & TEST SUPPORT	1.2.6.7.3	41		$3,456,308	$691,262	20%	$4,147,569
OPERATIONS	1.2.6.8	16	$18,545,497	$181,918,522	$3,665,266	2%	$204,129,285
SITE & EQUIPMENT MAINTENENCE	1.2.6.8.1	NA	NA	$34,846,000	NA	NA	$34,846,000
PROJECT OPERATIONS	1.2.6.8.2	NA	NA	$48,186,500	NA	NA	$48,186,500
ENVIRONMENTAL, HEALTH & SAFETY TRAINING	1.2.6.8.3	NA	NA	$4,989,000	NA	NA	$4,989,000
INTEGRATED DATA SYSTEM	1.2.6.8.4	16	$18,545,497	$56,820,022	$3,665,266	5%	$79,030,785
INTEGRATED DATA SYSTEMS OPERATIONS	1.2.6.8.5	NA	NA	$37,077,000	NA	NA	$37,077,000

ESF TITLE I
CONTINGENCY ANALYSIS 8/23/91

THE FOLLOWING CONTINGENCIES ARE INTENDED TO COVER MATERIAL, EQUIPMENT PHYSICAL CONDITION OVERSIGHTS AS WELL AS RISK SITUATIONS AND DESIGN SHORT COMINGS. THESE ITEMS ARE NOT ALLOWED FOR ELSE WHERE IN THE ESTIMATE DUE TO UNCERTAINTY OF THIER EXSISTENCE, NATURE, LIKELY HOOD OF OCCURENCE OR MAGNITUDE OF EFFECT.

THESE CONTINGENCIES DO NOT COVER ANY ADDITIONS TO THE SCOPE OF WORK, COST ESCALATION, CHANGES IN PAY RATES OR REVISIONS TO COST ADDERS.

THE CONTINGENCY PERCENTAGES ARE BASED ON THE ESTIMATORS FIRST HAND KNOWLEDGE OF THE CURRENT DESIGN LIMITATIONS, THE LACK OF FIELD DATA/SURVEYS, KNOWLEDGE OF DRILL CORE SAMPLES AND PROPOSED SIZE, METHOD OF AND LOCATIONS OF CERTIAN EXCAVATIONS.

ITEM	W.B.S.	PERCENT	CONTINGENCY	TOTAL COST
YUCCA MT. EXPLORATORY FACILITY	**1.2.6**	**10%**	**$72,152,274**	**$765,703,001**
MANAGEMENT & INTEGRATION	**1.2.6.1**	**0%**	**$0**	**$135,050,500**
NO CONTINGENCY HAS BEEN PROVIDED FOR IN M&I AND/OR ANY CORPORATE BUDGETS.				
SITE PREPARATION	**1.2.6.2**	**17%**	**$9,011,736**	**$61,991,122**
10% IS DUE TO THE CURRENT STATE OF DESIGN, 7% ACCOUNTS FOR POSSIBLE UNFORESEEN BACKFILL REQUIREMENTS OR ROCK EXCAVATION.				
SURFACE FACILITIES	**1.2.6.3**	**19%**	**$2,506,791**	**$15,979,916**
10% IS DUE TO THE CURRENT STATE OF DESIGN, 3% ACCOUNTS FOR POSSIBLE UNFORESEEN ROCK EXCAVATION AND 1% FOR INTERIOR FURNISHINGS NOT DETAILED. FIVE PERCENT [5%] ALLOWS FOR THE EXPANSION OF THE CHANGEHOUSE AND SHOP FACILITIES AT THE RAMP SITES ONLY.				

NORTH ACCESS	**1.2.6.4**	**19%**	**$12,858,162**	**$80,685,344**
10% IS DUE TO THE CURRENT STATE OF DESIGN, 2% FOR POSSIBLIE INCREASES IN PROCUREMENT COST CAUSED BY Q.A. REQUIREMENTS, 4% FOR UNFORESEEN GROUND SUPPORT REQUIREMENTS, 1% FOR UTILITY OMISSIONS, 2% FOR TESTING SUPPORT AND ASSOCIATED DELAYS.				
SOUTH ACCESS	**1.2.6.5**	**19%**	**$13,861,568**	**$86,364,793**
10% IS DUE TO THE CURRENT STATE OF DESIGN, 2% FOR POSSIBLIE INCREASES IN PROCUREMENT COST CAUSED BY Q.A. REQUIREMENTS, 4% FOR UNFORESEEN GROUND SUPPORT REQUIREMENTS, 1% FOR UTILITY OMISSIONS, 2% FOR TESTING SUPPORT AND ASSOCIATED DELAYS.				
SUBSURFACE EXCAVATIONS	**1.2.6.6**	**22%**	**$24,446,427**	**$135,834,917**
10% IS DUE TO THE CURRENT STATE OF DESIGN, 2% FOR POSSIBLE INCREASES IN PROCUREMENT COST CAUSED BY Q.A. REQUIREMENTS, 4% FOR UNFORESEEN GROUND SUPPORT REQUIREMENTS, 3% FOR POOR EQUIPMENT PERFORMANCE, 1% FOR UTILITY OMISSIONS, 2% FOR TESTING SUPPORT.				
OPTIONAL ACCESS	**1.2.6.7**	**15%**	**$5,802,324**	**$45,667,124**
15% IS DUE TO THE CURRENT STATE OF THE SHAFT DESIGN ... THIS IS A PLANNING LEVEL ESTIMATE FOR A 25′ SHAFT WHICH WILL POSSIBELY BE ONLY 16′ IN THE FINAL DESIGN.				
OPERATIONS	**1.2.6.8**	**2%**	**$3,665,266**	**$204,129,285**
2% IS DUE TO THE CURRENT STATE OF DESIGN OF THE INTEGRATED DATA SYSTEM [I.D.S.] AND THIS CONTINGENCY ONLY APPLIES ONLY TO THE I.D.S., W.B.S. 1.2.6.8.4.. 1.5% IS TO COVER INCREASED LABOR INSTALLATION COST AND 0.5% FOR POSSIBLE INCREASES IN PROCUREMENT COST CAUSED BY Q.A. REQUIREMENTS.				

ESF TITLE I
RECONCILIATION SUMMARY

8/23/91

The estimate summary following is a comparison between the Independent Cost Estimate [ICE] and the Title I cost estimate contained in this report. Prior years expenditures are not included in this estimate and the ICE figures have also been reduced by the FY'91 WAS values and the time span is to the end of construction .

1.2.6 ESF TOTAL CONSTRUCTION COST

ICE = $667,074,432 [FY'92-FY'99] TITLE I = $765,703,001 [FY'92-FY'00]

1.2.6.1 MANAGEMENT & ENGINEERING

ICE = $123,198,000 TITLE I = $135,050,500

DURATION OF THE [TESTING AND CONSTRUCTION] SCHEDULE IS THE CAUSE OF COST INCREASE.

1.2.6.2 SITE PREPARATION

ICE = $67,725,983 TITLE I = $61,991,122

1.2.6.3 SURFACE FACILITIES

ICE = $15,462,037 TITLE I = $15,979,916

CRUSHING PLANT ADDED TO CONCRETE BATCH PLANT SETUP.

1.2.6.4 NORTH ACCESS

ICE = $68,584,168 TITLE I = $80,685,344

LENGTHENED EXCAVATION DURATIONS, CAPITAL EQUIPMENT REQUIREMENTS & TEST SUPPORT COST ACCOUNT FOR THE INCREASE.

1.2.6.5 SOUTH ACCESS

ICE = $69,033,088 TITLE I = $86,364,793

LENGTHENED EXCAVATION DURATIONS, CAPITAL EQUIPMENT REQUIREMENTS & TEST SUPPORT COST ACCOUNT FOR THE INCREASE.

1.2.6.6 SUBSURFACE EXCAVATIONS

ICE = $112,671,271 TITLE I = $135,834,917

INCREASE IS DUE TO TEST ALCOVE EXCAVATION QUANITIES, CAPITAL EQUIPMENT REQUIREMENTS & TEST SUPPORT COST.

1.2.6.7 OPTIONAL ACCESS

ICE = $42,309,038 TITLE I = $45,667,124

INCREASE IS CAUSED BY COMBINED EFFECTS OF COST ADDER REVISIONS, SMALL TOOLS-6%, SALES TAX-1%, HANDLING-1%.

1.2.6.8 OPERATIONS - INTEGRATED DATA SYSTEM

ICE = $168,090,847 TITLE I = $204,129,285

DURATION OF THE [TESTING AND CONSTRUCTION] SCHEDULE IS THE CAUSE OF COST INCREASE. REFINEMENT OF THE IDS ESTIMATE PLAYS A SECONDARY ROLL.