50-244

ROCHESTER GAS & ELECTRIC CORPORATION

DOCUMENT CONTROL

Document Transmittal

Transmittal: 200009017 055
Date: 09/19/2000
Holder: 1217

To: DOCUMENT CONTROL DESK
US NRC
ATT: GUY VISSING
PROJECT DOCTORATE 1-1
WASHINGTON DC 20555

LISTED BELOW ARE NEW OR REVISED CONTROLLED DOCUMENTS. REVIEW THE ATTACHED INSTRUCTION LETTER (IF APPLICABLE), AND UPDATE YOUR CONTROLLED DOCUMENT IN ACCORDANCE WITH EP-3-S-0901

Doc Id	Doc Title	Rev	Rev Date	Qty
TRM	TECHNICAL REQUIREMENTS MANUAL FOR GINNA STATION	014	09/20/2000	1

Receipt Acknowledgement and Action Taken:

Signature _____ Date _____

Return ENTIRE FORM to: Rochester Gas & Electric Corporation
Ginna Station - Records Management
1503 Lake Road
Ontario, New York 14519

A001

Rochester Gas and Electric Corporation

Inter-Office Correspondence

RECEIVED
SEP 19 2000
RECORDS MANAGEMENT

September 18, 2000

Subject: Technical Requirements Manual (TRM) Revision 14

To: Distribution

Attached are the revised pages for the Ginna Station Technical Requirements Manual (TRM). The changes included within Revision 14 are summarized as follows:

1. Section TR 3.9.1 has been revised to include requirements for the storage of recently offloaded spent fuel in region 1 of the spent fuel pool. A new Bases section is also included in this change.

2. The entire TRM is being reissued due to changes in software and formatting. The general formatting changes are summarized in the attachment to this correspondence.

Revision 14 of the TRM is considered effective September 20, 2000. Instructions for the necessary changes to your controlled copy of the ITS are as folows:

Volume	Section	Remove	Insert
III	TRM	all pages	new pages

Please contact Tom Harding (extension 3384) if you have any questions.

Thomas L. Harding

The following is a listing of the changes that are being generically applied to the TRM

1) The solid line at the bottom or top of a page of continued text has been deleted.

2) The use of the words "(continued)" at the bottom or top of a page of continued text has been deleted. Within the Actions tables the page break is maintained only after a 1st level logic so that the continuation is implicit.

3) The sub-section title or topic is deleted from each additional page of the sub-section or topic.

4) Section 3.0 has been given a combined title due to the two subsections having the same numbering. "LIMITING CONDITION FOR OPERATION (LCO) AND SURVEILLANCE REQUIREMENT (SR) APPLICABILITY"

5) For all notes, the words "NOTE" or "NOTES" which currently appear in the middle of a dashed line are moved under the dashed line and the "-NOTE-" is generically used in all cases including plural.

6) The page numbers are restarted for each individual sub-section.

7) In all tables the footnotes now appear at the end of the table, not on every page of the table.

R.E. Ginna Nuclear Power Plant

Technical Requirements Manual
TRM

Revision 14

Responsible Manager: George Wrobel

Effective Date: 09/20/2000

Controlled Copy No. 1217

List of Effective Pages
(TRM)

Page	Rev.
TOC	
i	14
ii	14
Section 1.0	
TR 1.0-1	14
Section 2.0	
TR 2.1-1	14
Section 3.0	
TR 3.0-1	14
TR 3.0-2	14
Section 3.1	
TR 3.1.1-1	14
TR 3.1.1-2	14
TR 3.1.1-3	14
TR 3.1.2-1	14
TR 3.1.2-2	14
Section 3.2	
TR 3.2-1	14
Section 3.3	
TR 3.3.1-1	14
TR 3.3.1-2	14
TR 3.3.2-1	14
TR 3.3.2-2	14
TR 3.3.3-1	14
TR 3.3.4-1	14
TR 3.3.4-2	14
TR 3.3.4-3	14

Page	Rev.
Section 3.3 (con'd)	
TR 3.3.4-4	14
TR 3.3.4-5	14
TR 3.3.4-6	14
TR 3.3.4-7	14
TR 3.3.5-1	14
TR 3.3.5-2	14
TR 3.3.5-3	14
Section 3.4	
TR 3.4.1-1	14
TR 3.4.1-2	14
TR 3.4.2-1	14
TR 3.4.2-2	14
TR 3.4.2-3	14
TR 3.4.3-1	14
TR 3.4.3-2	14
TR 3.4.3-3	14
TR 3.4.3-4	14
TR 3.4.3-5	14
TR 3.4.3-6	14
Section 3.5	
TR 3.5-1	14
Section 3.6	
TR 3.6-1	14
Section 3.7	
TR 3.7.1-1	14
TR 3.7.1-2	14
TR 3.7.1-3	14
TR 3.7.2-1	14
TR 3.7.2-2	14

Page	Rev.
Section 3.7 (con'd)	
TR 3.7.2-3	14
TR 3.7.2-4	14
TR 3.7.2-5	14
TR 3.7.3-1	14
TR 3.7.3-2	14
TR 3.7.3-3	14
TR 3.7.4-1	14
TR 3.7.4-2	14
TR 3.7.4-3	14
TR 3.7.4-4	14
TR 3.7.5-1	14
TR 3.7.5-2	14
TR 3.7.5-3	14
TR 3.7.5-4	14
TR 3.7.5-5	14
TR 3.7.6-1	14
TR 3.7.6-2	14
TR 3.7.7-1	14
TR 3.7.7-2	14
Section 3.8	
TR 3.8.1-1	14
TR 3.8.2-1	14
TR 3.8.2-2	14
Section 3.9	
TR 3.9.1-1	14
TR 3.9.2-1	14
TR 3.9.2-2	14
TR 3.9.3-1	14
TR 3.9.4-1	14
TR 3.9.4-2	14

Page	Rev.
Section 4.0	
TR 4.0-1	14
Section 5.0	
TR 5.1-1	14
TR 5.1-2	14

List of Effective Pages
(TRM Bases)

Page	Rev.	Page	Rev.	Page	Rev.	Page	Rev.
TOC		**Section 3.8**					
iii	14	**Section 3.9**					
		TRB 3.9.1-1	14				
Section 2.0		TRB 3.9.1-2	14				
		TRB 3.9.1-3	14				
Section 3.0		TRB 3.9.2-1	14				
		TRB 3.9.3-1	14				
Section 3.1		TRB 3.9.4-1	14				
		TRB 3.9.4-2	14				
Section 3.2		TRB 3.9.4-3	14				
		TRB 3.9.4-4	14				
Section 3.3		**Section 4.0**					
Section 3.4		**Section 5.0**					
Section 3.5							
Section 3.6							
Section 3.7							
TRB 3.7.1-1	14						
TRB 3.7.2-1	14						
TRB 3.7.3-1	14						
TRB 3.7.4-1	14						
TRB 3.7.5-1	14						
TRB 3.7.6-1	14						
TRB 3.7.7-1	14						
TRB 3.7.7-2	14						
TRB 3.7.7-3	14						
TRB 3.7.7-4	14						
TRB 3.7.7-5	14						

1.0	**USE AND APPLICATION**	
TR 1.0	Use and Application	TR 1.0-1
2.0	**SAFETY LIMITS (SLs)**	
TR 2.1	SLs Violation	TR 2.1-1
3.0	**LIMITING CONDITION FOR OPERATION (LCO) APPLICABILITY AND SURVEILLANCE REQUIREMENT (SR) APPLICABILITY**	
TR 3.0	Limiting Condition For Operation (LCO) Applicability	TR 3.0-1
TR 3.0	Surveillance Requirement (SR) Applicability	TR 3.0-2
3.1	**REACTIVITY CONTROL SYSTEMS**	
TR 3.1.1	Boron Injection System – MODES 1, 2, 3, and 4	TR 3.1.1-1
TR 3.1.2	Boron Injection System – MODE 5	TR 3.1.2-1
3.2	**POWER DISTRIBUTION LIMITS**	
TR 3.2	Power Distribution Limits	TR 3.2-1
3.3	**INSTRUMENTATION**	
TR 3.3.1	Control Room Emergency Air Treatment System (CREATS) Toxic Gas Instrumentation	TR 3.3.1-1
TR 3.3.2	Circulating Water Flood Protection Instrumentation	TR 3.3.2-1
TR 3.3.3	Movable In-Core Instrumentation	TR 3.3.3-1
TR 3.3.4	Fire Detection Instrumentation	TR 3.3.4-1
TR 3.3.5	Low Temperature Overpressure Protection (LTOP) Arming Logic	TR 3.3.5-1
3.4	**REACTOR COOLANT SYSTEM (RCS)**	
TR 3.4.1	Reactor Vessel Head Vents	TR 3.4.1-1
TR 3.4.2	RCS Chemistry	TR 3.4.2-1
TR 3.4.3	Anticipated Transients Without Scram (ATWS) Mitigation	TR 3.4.3-1
3.5	**EMERGENCY CORE COOLING SYSTEMS (ECCS)**	
TR 3.5	Emergency Core Cooling Systems (ECCS)	TR 3.5-1
3.6	**CONTAINMENT SYSTEMS**	
TR 3.6	Containment Systems	TR 3.6-1
3.7	**PLANT SYSTEMS**	
TR 3.7.1	Fire Suppression Water Sources	TR 3.7.1-1
TR 3.7.2	Fire Suppression Spray and Sprinkler Systems	TR 3.7.2-1
TR 3.7.3	Halon Systems	TR 3.7.3-1
TR 3.7.4	Fire Hose Stations	TR 3.7.4-1
TR 3.7.5	Fire Barrier Penetration Seals	TR 3.7.5-1
TR 3.7.6	Yard Fire Loop	TR 3.7.6-1
TR 3.7.7	Spent Fuel Pool (SFP) Cooling System	TR 3.7.7-1

3.8	**ELECTRICAL POWER SYSTEMS**	
TR 3.8.1	Offsite Power Sources	TR 3.8.1-1
TR 3.8.2	Instrument Bus D	TR 3.8.2-1
3.9	**REFUELING OPERATIONS**	
TR 3.9.1	Fuel Storage in Spent Fuel Pool (SFP)	TR 3.9.1-1
TR 3.9.2	Fuel Assembly Movement in Auxiliary Building	TR 3.9.2-1
TR 3.9.3	Refueling Manipulator Crane Interlocks	TR 3.9.3-1
TR 3.9.4	Full Core Offload for Cycle 27	TR 3.9.4-1
4.0	**DESIGN FEATURES**	
TR 4.0	Design Features	TR 4.0-1
5.0	**ADMINISTRATIVE CONTROLS**	
TR 5.1	Temporary LCO Requirements	TR 5.1-1

TRB 2.0 SAFETY LIMITS (SLs)

TRB 3.1 REACTIVITY CONTROL SYSTEMS

TRB 3.2 POWER DISTRIBUTION LIMITS

TRB 3.3 INSTRUMENTATION

TRB 3.4 REACTOR COOLANT SYSTEM (RCS)

TRB 3.5 EMERGENCY CORE COOLING SYSTEMS (ECCS)

TRB 3.6 CONTAINMENT SYSTEMS

TRB 3.7 PLANT SYSTEMS

TRB 3.7.1 Fire Suppression Water Sources . . . . . TRB 3.7.1-1
TRB 3.7.2 Fire Suppression Spray and Sprinkler Systems . . . . . TRB 3.7.2-1
TRB 3.7.3 Halon Systems . . . . . TRB 3.7.3-1
TRB 3.7.4 Fire Hose Stations . . . . . TRB 3.7.4-1
TRB 3.7.5 Fire Barrier Penetration Seals . . . . . TRB 3.7.5-1
TRB 3.7.6 Yard Fire Loop . . . . . TRB 3.7.6-1
TRB 3.7.7 Spent Fuel Pool (SFP) Cooling System . . . . . TRB 3.7.7-1

TRB 3.8 ELECTRICAL POWER SYSTEMS

TRB 3.9 REFUELING OPERATIONS

TRB 3.9.1 Fuel Storage in Spent Fuel Pool (SFP) . . . . . TRB 3.9.1-1
TRB 3.9.2 Fuel Assembly Movement in Auxiliary Building . . . . . TRB 3.9.2-1
TRB 3.9.3 Refueling Manipulator Crane Interlocks. . . . . TRB 3.9.3-1
TRB 3.9.4 Full Core Offload for Cycle 27 . . . . . TRB 3.9.4-1

1.0 USE AND APPLICATION

TR 1.0 Use and Application

The Technical Requirements (TRs) in this manual follow the same rules of usage as the Improved Technical Specifications. Specifically Technical Specifications:

a. 1.1, "Definitions,"

b. 1.2, "Logical Connectors,"

c. 1.3, "Completions Times," and

d. 1.4, "Frequency."

2.0 SAFETY LIMITS (SLs)

TR 2.1 SLs Violation

TR 2.1 See SL 2.1.1 and SL 2.1.2.

APPLICABILITY: In accordance with SL 2.1.

ACTIONS

CONDITION	REQUIRED ACTION	COMPLETION TIME
A. SL 2.1.1 or SL 2.1.2 violated.	A.1 Notify Senior Vice President, Generation.	Immediately
	AND	
	A.2 Notify NSARB Chairman.	Immediately
	AND	
	A.3 Notify NRC.	Immediately
	AND	
	A.4 Prepare Safety Limit Violation Report and submit to the NRC, NSARB, and Senior Vice President, Generation. The report shall describe the applicable circumstances preceding the violation, the effect of the violation upon facility components, systems, or structures, and the corrective actions take to prevent recurrence.	14 days

3.0 LIMITING CONDITION FOR OPERATION (LCO) APPLICABILITY AND SURVEILLANCE REQUIREMENT (SR) APPLICABILITY

TR 3.0 Limiting Condition For Operation (LCO) Applicability

The Technical Requirements (TRs) in this manual follow the same LCO applicabilities as the Improved Technical Specifications with the exception of:

a. LCO 3.0.3 which relates to the failure to meet a Required Action and the associated plant shutdown actions;

b. LCO 3.0.4 and SR 3.0.4 which relate to changing MODES with inoperable equipment or incomplete surveillances; and

c. LCO 3.0.6 which deals solely with ITS LCOs on support/supported system inoperabilities.

The failure to meet any Required Action for which no additional ACTIONS are provided shall result in continued efforts to meet the specified Required Action. A plant shutdown to exit the MODE of Applicability is not required unless directed by plant management. This does not endorse the practice of failing to meet specified Required Actions.

The TRs in this manual also follow the same organization as the Improved Technical Specifications (e.g., Reactivity Control System requirements are contained in TR Chapter TR 3.1).

3.0 LIMITING CONDITION FOR OPERATION (LCO) APPLICABILITY AND SURVEILLANCE REQUIREMENT (SR) APPLICABILITY

TR 3.0 Surveillance Requirement (SR) Applicability

The Technical Surveillance Requirements (TSRs) in this manual follow the same SR applicabilities as the Improved Technical Specifications.

3.1 REACTIVITY CONTROL SYSTEMS

TR 3.1.1 Boron Injection System - MODES 1, 2, 3, and 4

TR 3.1.1 Two boron injection subsystems shall be OPERABLE with each subsystem containing one charging pump and either a or b below.

a. A flowpath from the RWST; or

b. A flowpath containing an OPERABLE boric acid transfer pump and a boric acid storage tank which meets the limits specified in Table TR 3.1.1-1.

APPLICABILITY: MODES 1, 2, 3, and 4.

ACTIONS

CONDITION		REQUIRED ACTION		COMPLETION TIME
A.	One boron injection subsystem inoperable.	A.1	Restore boron injection subsystem to OPERABLE status.	72 hours
B.	Required Action and associated Completion Time of Condition A not met in MODES 1 and 2.	B.1	Be in MODE 3.	6 hours
		AND		
		B.2	Verify SDM is within the limits specified in the COLR for one loop operation.	6 hours
C.	Required Action and associated Completion Time of Condition A not met in MODE 3 and 4.	C.1	Restore boron injection subsystem to OPERABLE status.	7 days
D.	Required Action and associated Completion Time of Condition C not met.	D.1	Be in MODE 5.	30 hours
E.	Both boron injection subsystems inoperable.	E.1	Initiate action to restore at least one boron injection subsystem to OPERABLE status.	Immediately

SURVEILLANCE REQUIREMENTS

	SURVEILLANCE	FREQUENCY
TSR 3.1.1.1	- NOTE - Only required to be performed when complying with TR 3.1.1.a. Verify RWST boron concentration is ≥ 2300 ppm.	7 days
TSR 3.1.1.2	- NOTE - Only required to be performed when complying with TR 3.1.1.b. Verify boric acid storage tank level is within limit.	24 hours
TSR 3.1.1.3	- NOTE - Only required to be performed when complying with TR 3.1.1.b. Verify boric acid storage tank boron concentration is within limit.	Twice per week
TSR 3.1.1.4	Perform CHANNEL CALIBRATION of Volume Control Tank level indication.	18 months
TSR 3.1.1.5	- NOTE - Only required to be performed when complying with TR 3.1.1.b. Perform CHANNEL CALIBRATION of boric acid control system.	18 months
TSR 3.1.1.6	- NOTE - Only required to be performed when complying with TR 3.1.1.b. Perform CHANNEL CALIBRATION of boric acid storage tank level indication.	18 months

Table TR 3.1.1-1
Boric Acid Storage Tank Requirements

BORON CONCENTRATION (PPM)	MINIMUM VOLUME (GALLONS)	MINIMUM SOLUTION TEMPERATURE (°F)
6000 to less than 7000	7500	62
7000 to less than 8000	6300	70
8000 to less than 9000	5400	78
9000 to less than 10000	4800	85
10000 to less than 11000	4300	91
11000 to less than 12000	3800	97
12000 to less than 13000	3500	103
13000 to less than 14000	3300	108
14000 to less than 15000	3100	113
15000 to less than 16000	2900	118
16000 to less than 17000	2700	123
17000 to less than 18000	2600	127
18000 to less than 19000	2400	131
19000 to less than 20000	2300	137
20000 to less than 21000	2200	140
21000 to less than 22000	2200	143
22000 to less than 23000	2100	145

3.1 REACTIVITY CONTROL SYSTEMS

TR 3.1.2 Boron Injection System - MODE 5

TR 3.1.2 Either a or b below shall be met:

a. The boron concentration of the Reactor Coolant System (RCS) shall be within the limit specified in the COLR for LCO 3.9.1; or

b. One boron injection subsystem shall be OPERABLE.

APPLICABILITY: MODE 5.

ACTIONS

CONDITION	REQUIRED ACTION	COMPLETION TIME
A. - NOTE - Only applicable to TR 3.1.2.b. Required boron injection subsystem inoperable.	A.1 Suspend positive reactivity changes.	Immediately
	AND	
	A.2.1 Initiate action to restore required boron injection subsystem to OPERABLE status.	Immediately
	OR	
	A.2.2 Initiate action to verify RCS boron concentration is within limit specified in the COLR for LCO 3.9.1.	Immediately
B. - NOTE - Only applicable to TR 3.1.2.a. RCS boron concentration not within limit.	B.1 Initiate action to borate RCS to within limit.	Immediately
	OR	
	B.2 Initiate action to verify one boron injection subsystem is OPERABLE.	Immediately

SURVEILLANCE REQUIREMENTS

	SURVEILLANCE	FREQUENCY
TSR 3.1.2.1	- NOTE - Only required to be performed when complying with TR 3.1.2.b. Verify boron injection subsystem suction source boron concentration is ≥ 2300 ppm.	Twice per week
TSR 3.1.2.2	- NOTE - Only required to be performed when complying with TR 3.1.2.a. Verify RCS boron concentration is within the limit specified in the COLR for LCO 3.9.1.	72 hours

3.2 POWER DISTRIBUTION LIMITS

TR 3.2 Power Distribution Limits

There are no technical requirements associated with this Chapter.

3.3 INSTRUMENTATION

TR 3.3.1 Control Room Emergency Air Treatment System (CREATS) Toxic Gas Instrumentation

TR 3.3.1 The CREATS actuation instrumentation for each toxic gas Function in Table TR 3.3.1-1 shall be OPERABLE.

APPLICABILITY: MODES 1, 2, 3, 4, 5 and 6.

ACTIONS

- NOTE -

CREATS air intake may be unisolated for up to 1 hour per day for fresh air makeup to improve the working environment in the control room.

CONDITION	REQUIRED ACTION	COMPLETION TIME
A. One or more toxic gas functions with one channel inoperable.	A.1 Place isolation dampers in CREATS MODE F.	1 hour

SURVEILLANCE REQUIREMENTS

SURVEILLANCE		FREQUENCY
TSR 3.3.1.1	Perform COT.	31 days
TSR 3.3.1.2	Perform CHANNEL CALIBRATION.	18 months

Table TR 3.3.1-1
CREATS Toxic Gas Instrumentation

FUNCTION	REQUIRED CHANNELS	SURVEILLANCE REQUIREMENTS	TRIP SETPOINT
1. Chlorine	1	SR 3.3.1.1 SR.3.3.1.2	≤ 5 ppm
2. Ammonia	1	SR 3.3.1.1 SR 3.3.1.2	< 35 mg/m^3

3.3 INSTRUMENTATION

TR 3.3.2 Circulating Water Flood Protection Instrumentation

TR 3.3.2 The Circulating Water Flood Protection instrumentation for each Function in Table TR 3.3.2-1 shall be OPERABLE.

APPLICABILITY: MODES 1 and 2.

ACTIONS

- NOTE -

Separate Condition entry is allowed for each set.

CONDITION		REQUIRED ACTION		COMPLETION TIME
A.	One or more Functions with one required channel in one or more set(s) inoperable.	A.1	Initiate action to verify that affected function set is OPERABLE.	Immediately
B.	One or more Functions with two or more required channels in a set inoperable.	B.1	Restore set to OPERABLE status.	7 days
C.	One or more Functions with both sets inoperable.	C.1	Restore at least one set to OPERABLE status.	24 hours
D.	Required Action and Associated Completion Time not met.	D.1	Initiate action to establish a continuous flood watch.	Immediately

SURVEILLANCE REQUIREMENTS

SURVEILLANCE		FREQUENCY
TSR 3.3.2.1	Perform TADOT.	18 months

Table TR 3.3.2-1
Circulating Water Flood Protection Instrumentation

FUNCTION	REQUIRED CHANNELS
1. Condenser	2 sets of 3 channels
2. Screenhouse	2 sets of 3 channels

3.3 INSTRUMENTATION

TR 3.3.3 Movable In-Core Instrumentation

TR 3.3.3 Two thimbles per quadrant and sufficient movable in-core detectors shall be OPERABLE.

APPLICABILITY: During recalibration of the excore axial off-set detection system.

ACTIONS

CONDITION	REQUIRED ACTION	COMPLETION TIME
A. One or more required thimbles per quadrant or movable in-core detectors inoperable.	A.1 Initiate action to limit power to ≤ 90% RTP.	Immediately

SURVEILLANCE REQUIREMENTS

SURVEILLANCE		FREQUENCY
TSR 3.3.3.1	- NOTE - Not required to be performed prior to flux mapping operations. Verify two thimbles per quadrant and sufficient movable in-core detectors are OPERABLE.	Once prior to axial off-set adjustment of NIS

3.3 INSTRUMENTATION

TR 3.3.4 Fire Detection Instrumentation

TR 3.3.4 The fire detection instrumentation in Table TR 3.3.4-1 shall be OPERABLE.

APPLICABILITY: At all times.

ACTIONS

- NOTE -

Separate Condition entry is allowed for each detector.

CONDITION	REQUIRED ACTION	COMPLETION TIME
A. One or more required detection instruments located outside containment inoperable.	- NOTE - Required Action A.1 not required during emergency conditions which prohibit access to the affected zone.	
	A.1 Perform fire watch inspection of affected fire zone.	Once within 1 hour and every hour thereafter
	AND	
	A.2 Restore required detection instrument to OPERABLE status.	14 days

CONDITION	REQUIRED ACTION	COMPLETION TIME
B. One or more required detection instruments located inside containment inoperable.	B.1.1 Perform a fire watch inspection of the affected fire zone.	Once within 1 hour and every 8 hours thereafter
	<u>OR</u>	
	B.1.2 Monitor containment air temperature at a minimum of 16 representative locations as shown in Table TR 3.3.4-2.	Once within 1 hour and every hour thereafter
	<u>AND</u>	
	B.2 Restore required detection instrument to OPERABLE status.	14 days
C. Required Action and associated Completion Time not met.	C.1 Prepare special report and submit to NRC outlining cause of instrument inoperability and plans for restoring to OPERABLE status.	30 days

SURVEILLANCE REQUIREMENTS

SURVEILLANCE		FREQUENCY
TSR 3.3.4.1	Perform a continuity check of nonsupervised circuits between the local alarm panel and the control room for Charcoal Filter 1G.	92 days
TSR 3.3.4.2	Perform a continuity check of supervised circuits associated with detector alarms.	24 months
TSR 3.3.4.3	- NOTE - Verification of RTD detectors inside containment shall include detector continuity and temperature indication in the control room. Perform a TADOT of fire detection instrumentation.	24 months

Table TR 3.3.4-1
Fire Detection Instrumentation

LOCATION	FIRE ZONE	REQUIRED HEAT DETECTORS	REQUIRED SMOKE DETECTORS
1. Containment			
a. Post Accident Charcoal Filter A	Z09, Z10	3[a][b][c]	N/A
b. Post Accident Charcoal Filter B	Z11, Z12	3[a][b][c]	N/A
c. Auxiliary Filter Charcoal Bank A	Z06	1[b][c]	N/A
d. Auxiliary Filter Charcoal Bank B	Z07	1[b][c]	N/A
e. Cable Trays - Basement Elevation	Z08	1[b][d]	N/A
f. Cable Trays - Intermediate Elevation	Z15	2[a][b][d]	N/A
g. Cable Trays - Operating Floor	Z16	1[b][d]	N/A
h. Reactor Coolant Pump (RCP) A - Intermediate Floor	Z13	1[b][d]	N/A
i. RCP B - Intermediate Floor	Z14	1[b][d]	N/A
j. Area Detection - Operating Floor	Z16	N/A	7[a][b]
2. Control Building			
a. Control Room - Area and Cabinet	Z19	1	17[a]
b. Control Room/Turbine Building Wall	S29	4[a]	N/A
c. Air Handling Room	S06	N/A	3[a]
d. Relay Room	Z18, S08	3[a]	20[a]
e. Battery Rooms A and B	pyrotronics area 2 zone 4	N/A	3[a]
3. Diesel Generators (DGs)			
a. DG Room A	S12	2	N/A
b. DG Vault A	Z20	N/A	1

Table TR 3.3.4-1
Fire Detection Instrumentation

LOCATION	FIRE ZONE	REQUIRED HEAT DETECTORS	REQUIRED SMOKE DETECTORS
c. DG Room B	S13	2	N/A
d. DG Vault B	Z21	N/A	1
4. Intermediate Building			
a. Motor Driven Auxiliary (AFW) Pump Area	Z22	N/A	9[a]
b. Turbine Driven AFW Pump and Oil Reservoir	S14	1	N/A
c. Cable Trays - Basement North	S15	N/A	14[a]
d. Purge Filter A - Elevation 315'4"	Z23	N/A	1
e. Purge Filter B - Elevation 315'4"	Z24	N/A	1
5. Screen House			
a. Area Detection - Service Water Pump and Bus Area	Z26	N/A	11[a]
b. Cable Trays - Basement	S17	N/A	4[a]
6. Standby AFW Building	Z25	N/A	8[a]
7. Cable Tunnel	Z05, S05	10[a]	8[a]
8. Auxiliary Building			
a. General Area - Pyrotronics Area 1 Zones 1, 2, 3	-	N/A	8[a]
b. Area Basement - East	Z01	N/A	5[a]
c. Area Basement - West and Residual Heat Removal Pit	Z02	N/A	9[a]
d. Basement Cable Trays - Safety Injection Pumps	S01	N/A	5[a]

Table TR 3.3.4-1
Fire Detection Instrumentation

	LOCATION	FIRE ZONE	REQUIRED HEAT DETECTORS	REQUIRED SMOKE DETECTORS
e.	Penetration Area Cable Trays - Mezzanine	Z03	N/A	2[(a)]
f.	Cable Trays - Electrical Cabinet, Mezzanine Center	S03	N/A	4[(a)]
g.	Cable Trays - Mezzanine East	S04	N/A	4[(a)]
h.	Area - Operating Floor	Z04	N/A	13[(a)]
i.	Charcoal Filter 1G	S02	11[(a)]	N/A

(a) There is one additional detector at each zone which is not required to be OPERABLE per this TR.

(b) This instrument is not required to be OPERABLE during performance of integrated leak rate tests.

(c) Resistance temperature detectors (RTDs) only.

(d) Line type detectors.

Table TR 3.3.4-2
Containment Temperature Monitors

	INSTRUMENT EIN	SYSTEM	LOCATION	READ POINT RANGE
1.	TE-490A/B	RVLIS	Sump	PPCS 0-360°F[a]
2.	TE-491A/B	RVLIS	Basement	PPCS 0-360°F[a]
3.	TE-492A/B	RVLIS	Intermediate	PPCS 0-360°F[a]
4.	TE-6035	Air Temp	Intermediate	PPCS 0-360°F[a]
5.	TE-6036	Air Temp	Intermediate	PPCS 0-360°F[a]
6.	TE-6037	Air Temp	Intermediate	PPCS 0-360°F[a]
7.	TE-6038	Air Temp	Intermediate	PPCS 0-360°F[a]
8.	TE-6045	Air Temp	Operating	PPCS 0-360°F[a]
9.	TE-6031	Air Temp	Basement	PPCS 0-360°F[a]
10.	TC-2139	VENTILA	CNMT Recirc A	MCB 0-250°F[a][b]
11.	TC-2141	VENTILA	CNMT Recirc B	MCB 0-250°F[a][b]
12.	TC-2143	VENTILA	CNMT Recirc C	MCB 0-250°F[a][b]
13.	TC-2145	VENTILA	CNMT Recirc D	MCB 0-250°F[a][b]
14.	TC-2150	CR Shroud	Fan Suction	MCB 0-250°F[b][c]
15.	TC-2151	CR Shroud	Fan Suction	MCB 0-250°F[b][c]
16.	TC-2152	CR Shroud	Fan Suction	MCB 0-250°F[b][c]
17.	TI-436	PRZR SV A	Outlet	MCB 0-400°F[c]
18.	TI-437	PRZR SV B	Outlet	MCB 0-400°F[c]
19.	TI-438	PRZR PORV	Outlet	MCB 0-400°F[c]
20.	TCV-DEW-1	Dew Point	Basement	PPCS 0-300°F[a]
21.	TCV-DEW-2	Dew Point	Intermediate	PPCS 0-300°F[a]

Table TR 3.3.4-2
Containment Temperature Monitors

	INSTRUMENT EIN	SYSTEM	LOCATION	READ POINT RANGE
22.	TCV-DEW-3	Dew Point	Operating	PPCS 0-300°F[(a)]
23.	TCV-DEW-4	Dew Point	Intermediate	PPCS 0-300°F[(a)]
24.	TCV-DEW-5	Dew Point	Intermediate	PPCS 0-300°F[(a)]
25.	TCV-DEW-6	Dew Point	Intermediate	PPCS 0-300°F[(a)]

(a) Designated as first back-up instruments

(b) Located on RK-28B

(c) Designated as second back-up instruments

3.3 INSTRUMENTATION

TR 3.3.5 Low Temperature Overpressure Protection (LTOP) Arming Logic

TR 3.3.5 The LTOP Arming Logic Functions in Table TR 3.3.5-1 shall be OPERABLE.

APPLICABILITY: When associated pressurizer power operated relief valves (PORVs) are required to be OPERABLE by LCO 3.4.12, "LTOP System."

ACTIONS

CONDITION	REQUIRED ACTION	COMPLETION TIME
A. ------------------ - NOTE - Only applicable to Function 1. ------------------ One channel inoperable.	A.1 Initiate action to restore inoperable channel.	Immediately
B. ------------------ - NOTE - Only applicable to Function 1. ------------------ Two channels inoperable.	B.1 Place one channel in trip. <u>OR</u> B.2 Declare associated PORVs inoperable.	Immediately Immediately
C. One or more train(s) inoperable. <u>OR</u> Three channels inoperable.	C.1 Declare associated PORV(s) inoperable.	Immediately

SURVEILLANCE REQUIREMENTS

SURVEILLANCE		FREQUENCY
TSR 3.3.5.1	Perform SR 3.4.12.6.	In accordance with SR 3.4.12.6
TSR 3.3.5.2	Perform SR 3.4.12.8.	In accordance with SR 3.4.12.8
TSR 3.3.5.3	Perform ACTUATION LOGIC TEST.	24 months

Table TR 3.3.5-1
LTOP Arming Logic

FUNCTION	REQUIRED CHANNELS	SURVEILLANCE REQUIREMENTS	TRIP SETPOINT
1. High RCS Pressure (PT-450, PT-451, and PT-452)	3	TSR 3.3.5.1 TSR 3.3.5.2	See PTLR
2. Automatic Actuation Logic and Actuation Relays	2 trains	TSR 3.3.5.3	NA

3.4 REACTOR COOLANT SYSTEM (RCS)

TR 3.4.1 Reactor Vessel Head Vents

TR 3.4.1 Two reactor vessel head vent valves, in each vent flow path, shall be OPERABLE and closed.

APPLICABILITY: MODES 1, 2, and 3.

ACTIONS

CONDITION	REQUIRED ACTION	COMPLETION TIME
A. One or more required reactor vessel head vent valve(s) inoperable.	A.1 Close at least one vent valve in affected flow path(s).	1 hour
	AND	
	A.2 Remove motive power from at least one closed vent valve actuator in affected flow path(s).	1 hour
	AND	
	A.3 Close both vent valves in affected flow path(s).	30 days
	AND	
	A.4 Remove motive power from both closed vent valves in affected flow path(s).	30 days
	AND	
	A.5 Restore at least one vent flow path to OPERABLE status.	30 days
B. One or more required reactor vessel head vent valve(s) open.	B.1 Initiate action to close required vent valve(s).	Immediately

CONDITION	REQUIRED ACTION	COMPLETION TIME
C. Required Actions and associated Completion Time not met.	C.1 Be in MODE 3. AND C.2 Be in MODE 4.	6 hours 12 hours

SURVEILLANCE REQUIREMENTS

SURVEILLANCE		FREQUENCY
TSR 3.4.1.1	Verify the required reactor head vent manual isolation valves are locked open.	18 months
TSR 3.4.1.2	Verify flow through the required reactor vessel head vent path using either liquid or gas.	36 months

3.4 REACTOR COOLANT SYSTEM (RCS)

TR 3.4.2 RCS Chemistry

TR 3.4.2 RCS chemistry shall be maintained within the limits specified in Table TR 3.4.2-1.

APPLICABILITY: According to Table TR 3.4.2-1.

ACTIONS

CONDITION	REQUIRED ACTION	COMPLETION TIME
A. One or more chemistry parameters not within Steady State Limits in MODES 1, 2, 3, and 4.	A.1 Restore chemistry parameter(s) to within Steady State Limits.	24 hours
B. Required Action and associated Completion Time of Condition A not met.	B.1 Be in MODE 3.	6 hours
	AND	
	B.2 Be in MODE 5.	36 hours
C. Fluoride or chloride parameters not within Steady State Limits for > 48 hours in MODES 5 and 6.	C.1 Initiate action to maintain RCS pressure ≤ 500 psig.	Immediately
	AND	
	C.2 - NOTE - Required Action C.2 shall be completed if this Condition is entered.	
	Perform an engineering evaluation and determine RCS remains acceptable for continued operation.	Prior to RCS operation > 200°F or > 500 psig

CONDITION	REQUIRED ACTION	COMPLETION TIME
D. One or more chemistry parameters not within Transient Limits.	D.1 Be in MODE 3	6 hours
	AND	
	D.2 Be in MODE 5 with RCS pressure ≤ 500 psig.	36 hours
	AND	
	D.3	
	- NOTE - Required Action D.3 shall be completed if this Condition is entered.	
	Perform an engineering evaluation and determine RCS remains acceptable for continued operation.	Prior to RCS operation > 200°F or > 500 psig

SURVEILLANCE REQUIREMENTS

SURVEILLANCE		FREQUENCY
TSR 3.4.2.1	Verify RCS chemistry parameter is within limits.	3 times per week and at least once every 3 days
TSR 3.4.2.2	Verify RCS chemistry parameter is within limits.	5 times per week and at least once every 2 days

Table TR 3.4.2-1
RCS Chemistry

PARAMETER	APPLICABLE MODES OR OTHER SPECIFIED CONDITIONS	STEADY-STATE LIMIT (PPM)	TRANSIENT LIMIT (PPM)	SURVEILLANCE REQUIREMENTS
1. Oxygen	1, 2, 3, and 4[(a)]	0.10	1.00	TSR 3.4.2.2
2. Fluoride	1, 2, 3, 4, 5, and 6	0.15	1.50	TSR 3.4.2.1
3. Chloride	1, 2, 3, 4, 5, and 6	0.15	1.50	TSR 3.4.2.1

(a) RCS ≥ 250°F

3.4 REACTOR COOLANT SYSTEM (RCS)

TR 3.4.3 Anticipated Transients Without Scram (ATWS) Mitigation

TR 3.4.3 ATWS Mitigation shall be OPERABLE as follows:

a. Each PORV shall be capable of automatic actuation and each block valve shall be open;

b. Manual rod insertion shall be OPERABLE; and

c. ATWS Mitigation System Actuation Circuitry (AMSAC) shall be OPERABLE.

APPLICABILITY: MODE 1 > 45% RTP.

ACTIONS

CONDITION	REQUIRED ACTION	COMPLETION TIME
A.	A.1 Verify all three trains of preferred auxiliary feedwater (AFW) OPERABLE.	Immediately
- NOTE - Only applicable with manual rod insertion (MRI) OPERABLE.	OR	
One PORV automatic flowpath inoperable.	A.2.1 Verify cycle burnup ≥ 693 MWD/MTU.	Immediately
	AND	
	A.2.2.1 Verify both motor-driven AFW (MDAFW) trains OPERABLE.	Immediately
	OR	
	A.2.2.2 Verify turbine-driven AFW (TDAFW) train OPERABLE.	Immediately
	OR	
	A.2.2.3 Verify one MDAFW train and one TDAFW flowpath OPERABLE.	Immediately

CONDITION	REQUIRED ACTION	COMPLETION TIME
B.	B.1.1 Verify cycle burnup ≥ 2807 MWD/MTU.	Immediately
- NOTE - Only applicable with MRI OPERABLE.	AND	
Both PORV automatic flowpaths inoperable.	B.1.2 Verify all three trains of preferred AFW OPERABLE.	Immediately
	OR	
	B.2.1 Verify cycle burnup ≥ 3026 MWD/MTU.	Immediately
	AND	
	B.2.2.1 Verify both MDAFW trains OPERABLE.	Immediately
	OR	
	B.2.2.2 Verify TDAFW train OPERABLE.	Immediately
	OR	
	B.2.2.3 Verify one MDAFW train and one TDAFW flowpath OPERABLE.	Immediately

CONDITION	REQUIRED ACTION	COMPLETION TIME
C.	C.1.1 Verify cycle burnup ≥ 5067 MWD/MTU.	Immediately
- NOTE - Only applicable with MRI inoperable.	AND	
One PORV automatic flowpath inoperable.	C.1.2 Verify all three trains of preferred AFW OPERABLE.	Immediately
	OR	
	C.2.1 Verify cycle burnup ≥ 5650 MWD/MTU.	Immediately
	AND	
	C.2.2.1 Verify both MDAFW trains OPERABLE.	Immediately
	OR	
	C.2.2.2 Verify TDAFW train OPERABLE.	Immediately
	OR	
	C.2.2.3 Verify one MDAFW train and one TDAFW flowpath OPERABLE.	Immediately

CONDITION	REQUIRED ACTION	COMPLETION TIME
D.	D.1.1 Verify cycle burnup ≥ 7035 MWD/MTU.	Immediately
- NOTE - Only applicable with MRI inoperable.	AND	
Both PORV automatic flowpaths inoperable.	D.1.2 Verify all three trains of preferred AFW OPERABLE.	Immediately
	OR	
	D.2.1 Verify cycle burnup ≥ 7619 MWD/MTU.	Immediately
	AND	
	D.2.2.1 Verify both MDAFW trains OPERABLE.	Immediately
	OR	
	D.2.2.2 Verify TDAFW train OPERABLE.	Immediately
	OR	
	D.2.2.3 Verify one MDAFW train and one TDAFW flowpath OPERABLE.	Immediately

CONDITION	REQUIRED ACTION	COMPLETION TIME
E. Required Actions and associated Completion Time not met. OR MRI inoperable with cycle burnup < 2987 MWD/ MTU. OR MRI inoperable with cycle burnup < 4046 MWD/ MTU and LCO 3.7.5 declared not met. OR AMSAC inoperable.	E.1 Declare ATWS mitigating capability inoperable.	Immediately

SURVEILLANCE REQUIREMENTS

SURVEILLANCE		FREQUENCY
TSR 3.4.3.1	Verify block valves are open.	12 hours
TSR 3.4.3.2	Perform SR 3.1.4.3.	In accordance with SR 3.1.4.3
TSR 3.4.3.3	Perform a COT on each PORV including actuation.	24 months
TSR 3.4.3.4	Perform a CHANNEL CALIBRATION on each PORV automatic actuation logic.	24 months
TSR 3.4.3.5	Perform a CHANNEL CALIBRATION on AMSAC.	18 months
TSR 3.4.3.6	Perform an ACTUATION LOGIC TEST on AMSAC.	18 months

3.5 EMERGENCY CORE COOLING SYSTEMS (ECCS)

TR 3.5 Emergency Core Cooling Systems (ECCS)

There are no technical requirements associated with this Chapter.

3.6 CONTAINMENT SYSTEMS

TR 3.6 Containment Systems

There are no technical requirements associated with this Chapter.

3.7 PLANT SYSTEMS

TR 3.7.1 Fire Suppression Water Sources

TR 3.7.1 Two fire pumps shall be OPERABLE and aligned to the fire suppression header.

APPLICABILITY: At all times.

ACTIONS

CONDITION		REQUIRED ACTION		COMPLETION TIME
A.	One required fire pump inoperable in MODES 1, 2, 3, or 4.	A.1	Restore required pump to OPERABLE status.	7 days
B.	Required Action and associated Completion Time of Condition A not met.	B.1	Start and operate redundant pump continuously.	24 hours
		AND		
		B.2	Prepare special report and submit to NRC outlining cause of pump inoperability and plans for restoring to OPERABLE status.	30 days
C.	One required fire pump inoperable in MODES 5 or 6, or with the reactor defueled.	C.1	Restore required pump to OPERABLE status.	7 days
D.	Required Action and associated Completion Time of Condition C not met.	D.1	Prepare special report and submit to NRC outlining cause of pump inoperability and plans for restoring to OPERABLE status.	30 days

CONDITION		REQUIRED ACTION		COMPLETION TIME
E.	Two fire pumps inoperable. OR Fire suppression header inoperable.	E.1	Establish a backup fire suppression water system.	24 hours
F.	Required Action and associated Completion Time of Condition E not met.	F.1 AND F.2 AND F.3	Be in MODE 3. Be in MODE 5. Prepare special report and submit to NRC outlining cause of fire suppression inoperability and plans for restoring to OPERABLE status.	6 hours 36 hours 30 days

SURVEILLANCE REQUIREMENTS

SURVEILLANCE		FREQUENCY
TSR 3.7.1.1	Operate each fire pump on recirculation flow for ≥ 15 minutes.	31 days
TSR 3.7.1.2	Verify each fire suppression valve in the pump train or header flow path that is not locked, supervised, or otherwise secured in position is in the correct position.	31 days
TSR 3.7.1.3	Verify level of diesel driven fire pump fuel oil tank is ≥ 50%.	31 days
TSR 3.7.1.4	Inspect and test diesel driven fire pump starting batteries.	31 days

SURVEILLANCE		FREQUENCY
TSR 3.7.1.5	Verify diesel driven fire pump fuel oil stored in the day tank is within ASTM D975 recommended limits for Number 2 diesel fuel oil for viscosity, water, and sediment.	92 days
TSR 3.7.1.6	Cycle air operated valve 9227 through one complete cycle.	10 months
TSR 3.7.1.7	- NOTE - 1. Not required to be performed for hydrant isolation valves. 2. Only required to be performed for valves which are testable in MODES 1, 2, 3, and 4. Cycle each valve in the pump or header flowpath through one complete cycle.	12 months
TSR 3.7.1.8	Verify each fire suppression pump starts automatically and sequentially on an actual or simulated actuation signal and produces ≥ 2000 gpm at 210 ft head.	18 months
TSR 3.7.1.9	Verify each automatic fire suppression valve in the pump train or header flow path actuates to its correct position on an actual or simulated actuation signal.	24 months
TSR 3.7.1.10	- NOTE - Only required to be performed for valves which are not testable in MODES 1, 2, 3, and 4. Cycle each valve in the pump or header flowpath through one complete cycle.	18 months
TSR 3.7.1.11	Inspect diesel fire pump engine in accordance with procedures prepared in conjunction with manufacturer's recommendations for the class of service.	18 months
TSR 3.7.1.12	Record static pressure at suppression header test connection with one fire pump operating.	3 years

3.7 PLANT SYSTEMS

TR 3.7.2 Fire Suppression Spray and Sprinkler Systems

TR 3.7.2 The fire suppression spray and sprinkler systems in Tables TR 3.7.2-1 and TR 3.7.2-2 shall be OPERABLE.

APPLICABILITY: When equipment in the area is required to achieve or maintain safe shutdown.

ACTIONS

- NOTE -
Separate Condition entry is allowed for each system.

CONDITION	REQUIRED ACTION	COMPLETION TIME
A. One or more required systems in Table TR 3.7.2-1 inoperable.	A.1 - NOTE - Not required to be performed during emergency conditions that prohibit access to affected room. Establish a continuous fire watch with backup fire suppression equipment.	1 hour
	AND	
	A.2 Restore affected system to OPERABLE status.	14 days
B. Required Action and associated Completion Time of Condition A not met.	B.1 Prepare special report and submit to NRC outlining cause of system inoperability and plans for restoring to OPERABLE status.	30 days

CONDITION	REQUIRED ACTION	COMPLETION TIME
C. One or more required systems in Table TR 3.7.2-2 inoperable.	C.1 - NOTE - Not required to be performed during emergency conditions that prohibit access to affected room.	
	Perform a fire watch inspection of the affected fire zones.	Once within 1 hour and every hour thereafter
	AND	
	C.2 Place backup fire suppression equipment in affected area.	1 hour

SURVEILLANCE REQUIREMENTS

- NOTE -
Not required for systems in Table TR 3.7.2-2.

SURVEILLANCE		FREQUENCY
TSR 3.7.2.1	Verify the manual loss of locking pressure operation of each spray system.	24 months
TSR 3.7.2.2	Verify water flow and system alarm of each sprinkler system using inspector test valves.	12 months
TSR 3.7.2.3	Perform a functional test of each spray system using an actual or simulated signal.	24 months
TSR 3.7.2.4	Verify each valve in the spray flowpath is capable of going to its correct position on an actual or simulated signal.	24 months
TSR 3.7.2.5	Verify integrity of each spray header by a visual external inspection (except S02).	24 months

SURVEILLANCE		FREQUENCY
TSR 3.7.2.6	Verify integrity of S02 spray header by a visual external inspection.	60 months
TSR 3.7.2.7	Verify each spray nozzle is unblocked by a visual external inspection (except S02).	24 months
TSR 3.7.2.8	Verify each S02 spray nozzle is unblocked by a visual external inspection.	60 months
TSR 3.7.2.9	Perform an air flow test through each spray header and nozzle (except S02).	36 months
TSR 3.7.2.10	Perform an air flow test through the S02 spray header and nozzles.	60 months

Table TR 3.7.2-1
Fire Suppression Spray and Sprinkler Systems - Continuous Watch

	LOCATION	TYPE	SYSTEM NUMBER	FIRE SYSTEM ACTUATION
1.	Auxiliary Building Basement Cable Trays - SI Pumps	Sprinkler	S01	Preaction
2.	Auxiliary Building Intermediate Level - 1G Filter	Spray	S02	Automatic
3.	Auxiliary Building Intermediate Level at Cable Tunnel Entrance	Sprinkler	S03	Preaction
4.	Auxiliary Building Intermediate Level Cable Trays - East	Sprinkler	S04	Preaction
5.	Cable Tunnel	Spray	S05	Automatic
6.	Air Handling Room Cable Trays	Spray	S06	Automatic
7.	Relay Room - Southeast	Spray	S09	Manual
8.	Relay Room - West	Spray	S10	Manual
9.	Relay Room - Northeast	Spray	S11	Manual
10.	Diesel Generator (DG) Room A	Sprinkler	S12	Preaction
11.	DG Room B	Sprinkler	S13	Preaction
12.	Turbine Driven Auxiliary Feedwater Pump and Oil Reservoir	Spray	S14	Manual
13.	Intermediate Building East Cable Trays	Sprinkler	S15	Preaction
14.	Screenhouse Basement Cable Trays	Spray	S17	Automatic
15.	Screenhouse Service Water Pump Area	Sprinkler	S18	Automatic
16.	Control Room Turbine Building Wall	Spray	S29	Automatic

Table TR 3.7.2-2
Fire Suppression Spray and Sprinkler Systems - Hourly Watch

	LOCATION	TYPE	SYSTEM NUMBER	FIRE SYSTEM ACTUATION
1.	Main Oil Storage Room	Spray	S16	Automatic
2.	Service Building - Main Floor, Basement, Hot Shop	Sprinkler	S19	Automatic
3.	Transformer #1	Spray	S20	Automatic
4.	Transformer #11	Spray	S21	Automatic
5.	Transformer #12A	Spray	S22	Automatic
6.	Transformer #12B	Spray	S23	Automatic
7.	Turbine Condenser Pit	Spray	S24	Manual
8.	Generator Hydrogen Seal	Spray	S25	Automatic
9.	Turbine Island	Sprinkler	S26	Automatic
10.	Main Turbine Oil Reservoir	Spray	S27	Automatic
11.	Auxiliary Building - East Stairs	Sprinkler	S35	Automatic
12.	Auxiliary Building - West Stairs and Crane Hatch	Sprinkler	S36	Automatic
13.	Contamination Storage Building	Sprinkler	S50	Automatic

3.7 PLANT SYSTEMS

TR 3.7.3 Halon Systems

TR 3.7.3 Halon systems in Table TR 3.7.3-1 shall be OPERABLE.

APPLICABILITY: When equipment in the room is required to achieve or maintain safe shutdown.

ACTIONS

- NOTE -

Separate Condition entry is allowed for each halon system.

CONDITION	REQUIRED ACTION	COMPLETION TIME
A. Required halon system inoperable.	A.1 - NOTE - Not required to be performed during emergency conditions that prohibit access to affected room. Establish a continuous fire watch with backup fire suppression equipment.	1 hour
	AND	
	A.2 Restore affected halon system to OPERABLE status.	14 days
B. Required Action and associated Completion Time not met.	B.1 Prepare special report and submit to NRC outlining cause of halon system inoperability and plans for restoring to OPERABLE status.	30 days

SURVEILLANCE REQUIREMENTS

SURVEILLANCE		FREQUENCY
TSR 3.7.3.1	Verify pressure of each Halon storage tank is ≥ 90% of full charge pressure at 70°F.	24 months
TSR 3.7.3.2	Verify weight of each Halon storage tank is ≥ 95% of full charge weight at 70°F.	24 months
TSR 3.7.3.3	Verify each Halon system actuates on an actual or simulated actuation signal.	24 months
TSR 3.7.3.4	Perform a flow test with gas through each Halon system header and nozzles.	48 months
TSR 3.7.3.5	Verify each Halon system manual initiation system is OPERABLE.	24 months

Table TR 3.7.3-1
Halon Systems

LOCATION		SYSTEM NUMBER	SURVEILLANCE REQUIREMENTS
1.	Relay Room	S08	TSR 3.7.3.1 TSR 3.7.3.2 TSR 3.7.3.3 TSR 3.7.3.4 TSR 3.7.3.5

3.7 PLANT SYSTEMS

TR 3.7.4 Fire Hose Stations

TR 3.7.4 The fire hose stations in Table TR 3.7.4-1 shall be OPERABLE.

APPLICABILITY: At all times.

ACTIONS

- NOTE -
Separate Condition entry is allowed for each station.

CONDITION	REQUIRED ACTION	COMPLETION TIME
A. One or more required hose stations inoperable.	A.1 - NOTE - Not required to be performed for hose stations inside containment. Route a hose to the unprotected area from an OPERABLE hose station.	1 hour
	AND	
	A.2 Return hose station to OPERABLE status.	14 days
B. Required Action and associated Completion Time not met.	B.1 Prepare special report and submit to NRC outlining cause of hose station inoperability and plans for restoring to OPERABLE status.	30 days

SURVEILLANCE REQUIREMENTS

SURVEILLANCE		FREQUENCY
TSR 3.7.4.1	- NOTE - Not applicable to hose stations inside containment. Perform visual inspection of each hose station and record fire water header system pressure.	92 days
TSR 3.7.4.2	- NOTE - Only applicable to hose stations inside containment during MODES 5 and 6 and with the reactor defueled. Perform visual inspection of each hose station and record fire water header system pressure.	Once within 31 days and every 31 days thereafter
TSR 3.7.4.3	Unroll each fire hose for inspection and re-racking, and replace gaskets in the couplings as required.	18 months
TSR 3.7.4.4	Partially open each hose station valve to verify no blockage.	18 months
TSR 3.7.4.5	Pressure test each fire hose to ≥ 50 psig above the maximum working pressure.	3 years

Table TR 3.7.4-1
Fire Hose Stations

HOSE REEL NUMBER	BUILDING LOCATED	FLOOR ELEVATION	PROTECTED LOCATION
2	Turbine	Basement	Battery Room
3	Turbine	Basement	Diesel Generator Rooms
6	Turbine	Intermediate	4160 Bus
10	Turbine	Turbine Deck	Control Room
12	Intermediate	Level 4	West
13	Intermediate	Level 4	East
14	Intermediate	Level 3	East
15	Intermediate	Level 3	West
16	Intermediate	Level 2	West
17	Intermediate	Level 2	East
18	Intermediate	Level 1	East
19	Intermediate	Level 1	West
20	Intermediate	Level 1	South
21	Intermediate	Level 2	Nuclear Sample Room
22	Auxiliary	Operating	West
23	Auxiliary	Operating	Center
24	Auxiliary	Operating	East
25	Auxiliary	Intermediate	East
26	Auxiliary	Intermediate	Center
27	Auxiliary	Intermediate	West
28	Auxiliary	Basement	West
29	Auxiliary	Basement	Center
30	Auxiliary	Basement	East

Table TR 3.7.4-1
Fire Hose Stations

HOSE REEL NUMBER	BUILDING LOCATED	FLOOR ELEVATION	PROTECTED LOCATION
31	Screen House	Main	Fire Pumps
33	Containment	Operating	East
34	Containment	Operating	West
35	Containment	Mezzanine	East
36	Containment	Mezzanine	West
37	Containment	Basement	East
38	Containment	Basement	West

3.7 PLANT SYSTEMS

TR 3.7.5 Fire Barrier Penetration Seals

TR 3.7.5 Fire barrier penetration seal components in Table TR 3.7.5-1 shall be OPERABLE.

APPLICABILITY: At all times.

ACTIONS

- NOTE -

Separate Condition entry is allowed for each building/room.

CONDITION	REQUIRED ACTION	COMPLETION TIME
A. One or more required fire barrier penetration seal components inoperable.	A.1.1 Establish a continuous fire watch on one side of the affected penetration.	1 hour
	OR	
	A.1.2.1 Perform a fire watch inspection of the affected fire zones.	Once within 1 hour and every hour thereafter
	AND	
	A.1.2.2 Verify fire detectors on at least one side of the affected penetration are OPERABLE.	1 hour
	AND	
	A.2 Restore affected penetration to OPERABLE status.	7 days

CONDITION		REQUIRED ACTION		COMPLETION TIME
B.	Required Action and associated Completion Time not met.	B.1	Prepare special report and submit to NRC outlining cause of fire barrier penetration seal inoperability and plans for restoring to OPERABLE status.	30 days

SURVEILLANCE REQUIREMENTS

SURVEILLANCE		FREQUENCY
TSR 3.7.5.1	Verify by visual inspection each fire barrier penetration is OPERABLE.	18 months

Table TR 3.7.5-1
Fire Barrier Penetration Seals

BUILDING/ROOM	SEPARATION FROM	LOCATION IN BLDG/ROOM	FIRE BARRIER COMPONENTS
1. Control Building			
a. Air Handling Room	Turbine Bldg	North Wall	Fire Seals Fire Door F24 Fire Damper AH-44-P Fire Damper AH-39-P Fire Damper AH-53-P
b. Battery Room A	Turbine Bldg	North Wall	Fire Seals Fire Door F25 Fire Damper BA-28-P
c. Battery Room A	Air Handling Room	West Wall	Fire Seals Fire Damper BA-33-P Fire Damper BA-38-P
d. Battery Room B	Turbine Bldg	North Wall	Fire Seals Fire Door F26 Fire Damper BB-37-P
e. Battery Room B	Battery Room A	West Wall	Fire Seals Fire Door S49F Fire Damper BB-46-P Fire Damper BB-47-P
f. Control Room	Relay Room	Floor	Fire Seals
g. Computer (MUX) Room	Transformer Yard	West Wall	Fire Seals
h. Relay Room	Turbine Bldg	North Wall	Fire Seals Fire Door F504
i. Relay Room	TSC Back Closet	East Wall	Fire Seals
j. Relay Room	Transformers	South Wall	Fire Seals
k. Relay Room	Back Stairwell	West Wall	Fire Seals Fire Door F502
2. Diesel Generator (DG) Room A			
a. DG Room A	Oil Storage Room	West Wall	Fire Seals

Table TR 3.7.5-1
Fire Barrier Penetration Seals

BUILDING/ROOM	SEPARATION FROM	LOCATION IN BLDG/ROOM	FIRE BARRIER COMPONENTS
b. DG Room A	Turbine Bldg	South Wall	Fire Seals Fire Door F30
c. DG A Vault	DG B Vault	East Wall	Fire Seals
3. DG Room B			
a. DG Room B	DG Room A	West Wall	Fire Seals
b. DG Room B	Turbine Bldg	South Wall	Fire Seals Fire Door F29
c. DG B Vault	Remaining Vault	Special	Fire Seals
4. Intermediate			
a. Clean Side	Turbine Bldg - Basement	North Wall	Fire Seals Fire Door S37F Fire Door F36
b. Clean Side	Cable Tunnel (Tunnel entrance is a smoke barrier only)	East Wall	Fire Seals
c. Clean Side	Service Bldg Stairwell and Elevator Shaft	West Wall	Fire Seals
d. Clean Side	Turbine Bldg - Intermediate	North Wall	Fire Seals Fire Door S44F
e. Clean Side	Turbine Bldg - Operating	North Wall	Fire Seals
f. Controlled Side	Service Bldg	West Wall	Fire Seals Fire Damper F509 Fire Damper I-27-P

Table TR 3.7.5-1
Fire Barrier Penetration Seals

BUILDING/ROOM	SEPARATION FROM	LOCATION IN BLDG/ROOM	FIRE BARRIER COMPONENTS
g. Controlled Side	Service Bldg - Intermediate	West Wall	Fire Seals Fire Door S46F Fire Door S65F Fire Door F510 Fire Damper I-340-1-P Fire Damper I-340-2-P Fire Damper I-350-P Fire Damper I-402-P
h. Controlled Side	Aux Bldg - Spent Fuel Pool	South Wall	Fire Seals Fire Door F503 Fire Damper I-411-1-P Through I-411-21-P Fire Damper I-317-P
i. Controlled Side	Aux Bldg - Spent Fuel Pool	East Wall	Fire Seals Fire Damper I-318-P
5. Oil Storage Room	DG Room A	East Wall	Fire Seals
6. Auxiliary Building	Service Building	West Wall	Fire Seals

3.7 PLANT SYSTEMS

TR 3.7.6 Yard Fire Loop

TR 3.7.6 The yard hydrant on the southeast corner of the yard fire loop (Hydrant #12) shall be OPERABLE.

APPLICABILITY: At all times.

ACTIONS

CONDITION	REQUIRED ACTION	COMPLETION TIME
A. Yard hydrant inoperable.	A.1 Place 2.5 inch diameter hose in an adjacent OPERABLE hose house of sufficient length to protect the transformers and standby auxiliary feedwater building.	1 hour
	AND	
	A.2 Restore yard hydrant to OPERABLE status.	14 days
B. Required Action and associated Completion Time not met.	B.1 Prepare special report and submit to NRC outlining cause of yard hydrant inoperability and plans for restoring to OPERABLE status.	30 days

SURVEILLANCE REQUIREMENTS

SURVEILLANCE		FREQUENCY
TSR 3.7.6.1	Verify by visual inspection that the yard hydrant hose house on the southeast corner of the yard fire loop contains all required equipment.	31 days
TSR 3.7.6.2	Verify by visual inspection that the hydrant barrel of the yard hydrant on the southeast corner of the yard fire loop is dry and that the hydrant is not damaged.	Once during March, April or May AND Once during September, October, or November
TSR 3.7.6.3	Perform a hose hydrostatic test to ≥ 50 psig above the maximum pressure available at the yard fire hydrant on the southeast corner of the yard fire loop.	12 months
TSR 3.7.6.4	Replace all degraded gaskets in couplings of the hose in the yard hydrant hose house on the southeast corner of the yard fire loop.	12 months

3.7 PLANT SYSTEMS

TR 3.7.7 Spent Fuel Pool (SFP) Cooling System

TR 3.7.7 The SFP cooling system shall be maintained as follows:

a. The SFP water temperature shall be ≤ 150°F; and

b. Two SFP cooling systems shall be OPERABLE, each commensurate with the SFP heat load.

- NOTE -

The SFP heat load and SFP cooling capabilities are determined by Nuclear Engineering Services.

APPLICABILITY: Whenever any irradiated fuel assembly is stored in the SFP.

ACTIONS

CONDITION	REQUIRED ACTION	COMPLETION TIME
A. SFP temperature not within limit.	A.1 Suspend movement of irradiated fuel assemblies from the reactor to the SFP.	Immediately
	AND	
	A.2 Initiate action to restore SFP temperature to within limit.	Immediately
B. One required SFP cooling system inoperable.	B.1 Suspend movement of irradiated fuel assemblies from the reactor to the SFP.	Immediately
	AND	
	B.2 Restore a second SFP cooling system to OPERABLE status.	14 days

CONDITION	REQUIRED ACTION	COMPLETION TIME
C. Both required SFP cooling systems inoperable.	C.1 Perform TSR 3.7.7.1.	Once within 1 hour and every 4 hours thereafter
	AND	
	C.2 Restore one SFP cooling system to OPERABLE status.	Prior to the SFP water temperature exceeding 120°F

SURVEILLANCE REQUIREMENTS

SURVEILLANCE		FREQUENCY
TSR 3.7.7.1	Verify SFP temperature is within limit.	24 Hours
TSR 3.7.7.2	Verify power available to the two OPERABLE SFP cooling systems.	7 days

B 3.7 PLANT SYSTEMS

TRB 3.7.1 Fire Suppression Water Sources

BASES

* To be provided later.

B 3.7 PLANT SYSTEMS

TRB 3.7.2 Fire Suppression Spray and Sprinkler Systems

BASES

* To be provided later.

B 3.7 PLANT SYSTEMS

TRB 3.7.3 Halon Systems

BASES

* To be provided later.

B 3.7 PLANT SYSTEMS

TRB 3.7.4 Fire Hose Stations

BASES

* To be provided later.

B 3.7 PLANT SYSTEMS

TRB 3.7.5 Fire Barrier Penetration Seals

BASES

* To be provided later.

B 3.7 PLANT SYSTEMS

TRB 3.7.6 Yard Fire Loop

BASES

* To be provided later.

B 3.7 PLANT SYSTEMS

TRB 3.7.7 Spent Fuel Pool (SFP) Cooling System

BASES

BACKGROUND

The Spent Fuel Pool (SFP) Cooling System is designed to remove from the SFP the heat generated by stored spent fuel assemblies.

The SFP Cooling System consists of three cooling loops (see Figure TRB 3.7.7-1). The primary loop (loop B) is made up of the SFP Pump B, SFP Heat Exchanger B, and piping. The backup loops include installed loop A with the SFP Pump A, SFP Heat Exchanger A, and piping, and a standby loop with the Skid-Mounted SFP Pump, SFP Standby Heat Exchanger, and hoses. Service water (SW) circulates through the shell while SFP water circulates through the tubes of all three heat exchangers. The SFP Cooling System loop B is sized for 100% of the design SFP heat load. The SFP Cooling System loop A and the standby loop are each capable of removing the normal basis heat load and when operated in parallel can remove more than 100% of the design heat load (Ref. 1). Motor-operated valves provide automatic and remote manual isolation of the SW supply to the heat exchangers associated with the SFP Cooling System loops A and B and the Component Cooling Water Heat Exchangers. These valves close automatically upon coincidence of safety injection and loss of offsite power. Handwheels are provided for manual operation.

The SFP Cooling System is designed to maintain the pool ≤ 120°F during normal refueling conditions and ≤ 150°F during full core discharge operations (Ref. 1). The cooling systems can take a suction from either near the surface of the SFP and/or at a point above the irradiated fuel assemblies, such that a failure of any pipe in the system will not drain the pool to a point where the fuel would be exposed. The cooling system return line to the pool also contains a 0.25 inch vent hole located near the SFP surface level to prevent siphoning. Control board alarms exist with respect to the SFP level and temperature. These features all help to prevent inadvertent draining of the SFP.

APPLICABLE SAFETY ANALYSES

For structural integrity reasons, the pool water temperature is not to exceed 180°F. In order to provide sufficient time to take corrective action in the event of a SFP Cooling System failure, the pool temperature limit is not to exceed 150°F for all modes of operation including a full core discharge. The requirement for two 100% SFP Cooling Systems is based on being able to provide cooling following either a loss of offsite power or an active single failure within the SFP Cooling System.

TR

The SFP water temperature is required to be ≤ 150°F. The specified water temperature provides sufficient margin to the assumptions of the SFP structural integrity. As such, it is the maximum allowed while storing irradiated fuel assemblies within the SFP.

To ensure that the SFP temperature can be maintained within the required limit, two SFP Cooling Systems must be OPERABLE. This requirement provides for 100% backup capability assuming either a loss of offsite power or an active single failure within the SFP Cooling System.

SFP Cooling System loop A and loop B are considered OPERABLE when the respective pump has power available and the respective heat exchanger is capable of providing cooling water with the ability to remove the decay heat load of the irradiated fuel assemblies stored within the SFP. The standby loop is considered OPERABLE when the Skid-Mounted SFP Pump has power connected to a temporary power source, the SFP Standby Heat Exchanger has been staged, and the temporary hoses have been connected and leak checked. During a full core offload the SFP Cooling System loop A and standby loop may be operated in parallel to comprise one of the required OPERABLE systems. Loop A and the standby loop have the ability to utilize fire water for cooling in lieu of SW to provide for increased redundancy. The temporary electrical power source for the standby loop pump may also be varied to provide for increased redundancy.

Also included in the determination of OPERABILITY are all necessary support systems not addressed by this TR (e.g., service water, fire water, electrical). Single active failures are not required to be considered within the support systems for the purpose of this TR; however, the support systems must be capable of performing their support function per the definition of OPERABLE-OPERABILITY in ITS Section 1.1.

The TR is modified by a note. The SFP heat load from the irradiated fuel assemblies stored within the SFP is a variable based on the total number of assemblies stored, the power history of the individual assemblies, and the time since the assemblies were last irradiated. The heat removal capabilities of the individual SFP cooling loops is also a variable based on the temperature and flow rate of the cooling source, SW or fire water. The SFP heat load and the SFP Cooling System heat removal capabilities are determined by Nuclear Engineering Services and provided, as necessary, based on plant conditions.

APPLICABILITY

This TR applies whenever any irradiated fuel assembly is stored in the SFP, to provide sufficient margin to the assumptions of the SFP structural integrity. Specific requirements applicable during a full core discharge are covered by TR 3.9.4.

ACTIONS

A.1 and A.2

If the SFP temperature is not within limit, steps should be taken to preclude the assumptions of the SFP structural integrity from being exceeded. Suspending any operation that would increase SFP decay heat load, such as discharging a fuel assembly from the reactor to the SFP, is a prudent action under this condition. Therefore, actions shall be taken immediately to suspend movement of irradiated fuel assemblies from the core to the SFP.

With the potential for exceeding the assumptions of the SFP structural integrity, corrective actions to restore the SFP temperature to within limit shall be initiated immediately.

B.1 and B.2

With one of the required SFP Cooling Systems inoperable, suspending any operation that would increase SFP decay heat load, such as discharging an irradiated fuel assembly from the reactor to the SFP, is a prudent action under this condition. Therefore, actions shall be taken immediately to suspend movement of irradiated fuel assemblies from the core to the SFP.

With the suspension of fuel discharge into the SFP then a second SFP Cooling System must be restored to OPERABLE status within 14 days. In this condition the remaining OPERABLE SFP Cooling System is adequate to remove the decay heat load. The 14 day Completion Time is adequate to perform typical maintenance activities associated with a SFP Cooling System and takes into account the large heat sink capabilities of the SFP.

C.1 and C.2

If no SFP Cooling System is OPERABLE, there will be no forced cooling of the SFP and as such the SFP temperature must be monitored more frequently until the cooling is restored. This monitoring is accomplished by performing surveillance TSR 3.7.7.1 to verify SFP temperature is within limit. The Completion Time of 1 hour and every 4 hours thereafter is sufficient due to the large heat sink of the SFP and slow heatup rate.

Actions must also be initiated to restore one SFP Cooling System to OPERABLE status prior to the SFP temperature exceeding 120°F. The 120°F is not a safety requirement but is a limit set for normal operation and provides adequate margin to the 150°F limit.

SURVEILLANCE REQUIREMENTS

TSR 3.7.7.1

This TSR verifies that the SFP temperature is within the required limit. The temperature in the SFP must be checked periodically to ensure the SFP structural integrity is met. The 24 hour Frequency is appropriate due to the large volume of water in the pool and the relatively slow heatup rate.

Verification of SFP water temperature is normally accomplished by the use of TIA-635, which also provides a SFP high temperature alarm to alert the operators of an increasing SFP temperature.

TSR 3.7.7.2

Verification that the required pumps are OPERABLE ensures that an additional SFP pump can be placed in operation, if needed, to maintain decay heat removal. Verification is performed by verifying proper breaker alignment and power available to the required pumps. The Frequency of 7 days is considered reasonable in view of other administrative controls available and has been shown to be acceptable by operating experience.

REFERENCES

1. UFSAR, Section 9.1.3.

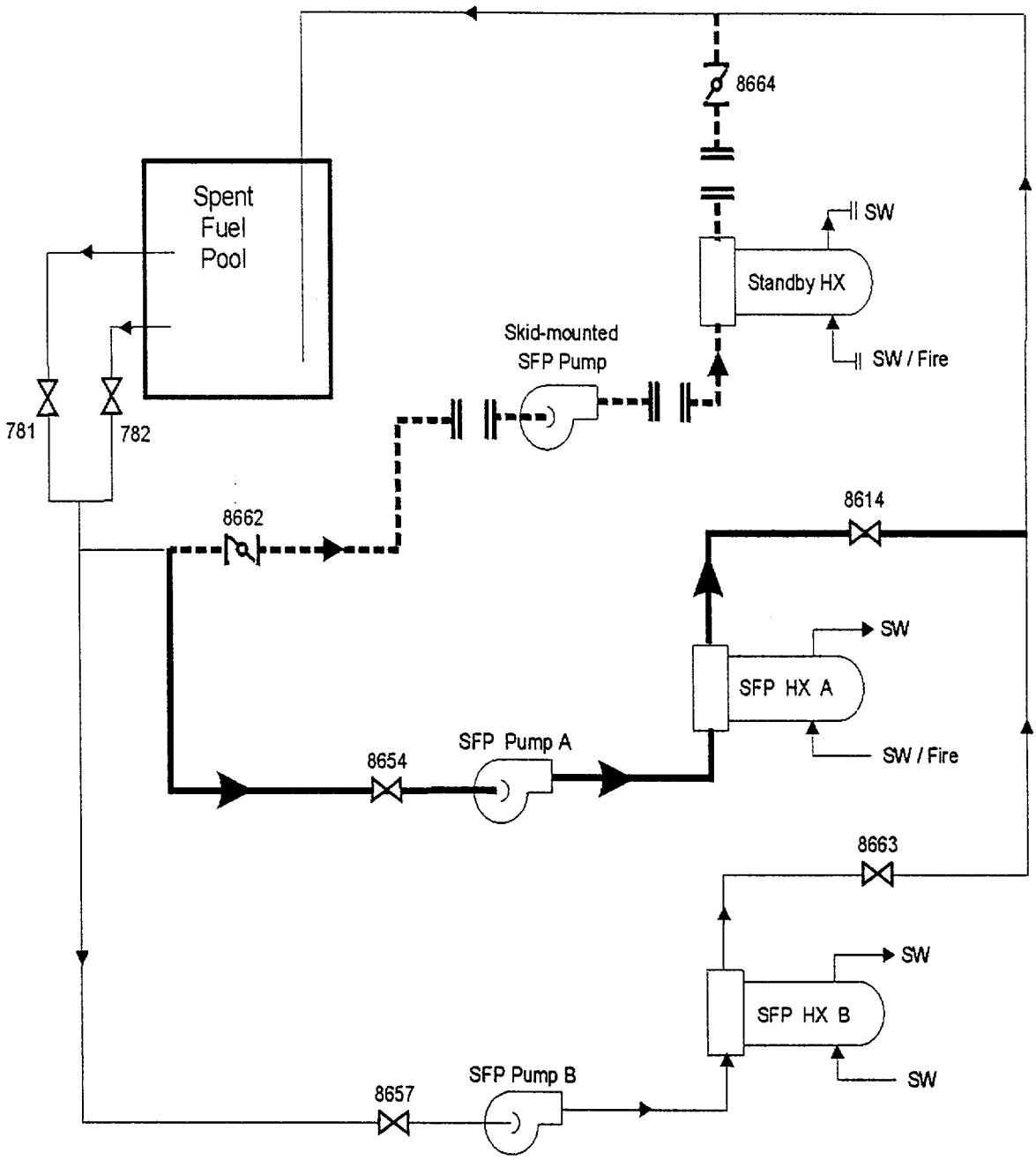

For illustration only

Legend:

- Loop B Flowpath
- Loop A Flowpath
- Standby Loop Flowpath

Figure TRB 3.7.7-1
SFP Cooling System

3.8 ELECTRICAL POWER SYSTEMS

TR 3.8.1 Offsite Power Sources

TR 3.8.1 Two qualified independent offsite power circuits shall be OPERABLE.

APPLICABILITY: MODES 1, 2, and 3.

ACTIONS

CONDITION		REQUIRED ACTION		COMPLETION TIME
A.	One offsite power circuit inoperable.	A.1	Initiate action to verify reliability of OPERABLE offsite power circuit.	Immediately
B.	Two offsite power circuits inoperable.	B.1	Enter LCO 3.8.1.	Immediately

SURVEILLANCE REQUIREMENTS

SURVEILLANCE		FREQUENCY
TSR 3.8.1.1	Verify correct breaker alignment and indicated power availability for each offsite power circuit.	7 days
TSR 3.8.1.2	Perform SR 3.8.1.6 for each offsite power circuit.	In accordance with SR 3.8.1.6

3.8 ELECTRICAL POWER SYSTEMS

TR 3.8.2 Instrument Bus D

TR 3.8.2 Instrument Bus D shall be OPERABLE.

APPLICABILITY: According to Table TR 3.8.2-1

ACTIONS

CONDITION	REQUIRED ACTION	COMPLETION TIME
A. Instrument Bus D inoperable.	A.1 Declare Table TR 3.8.2-1 Function 1 inoperable.	Immediately
	AND	
	A.2 Verify OPERABILITY of remaining Table TR 3.8.2-1 Functions.	Immediately

SURVEILLANCE REQUIREMENTS

SURVEILLANCE		FREQUENCY
TSR 3.8.2.1	Verify correct breaker alignment and voltage to required loads	7 days

Table TR 3.8.2-1
Instrument Bus D Supported Functions

FUNCTION	SUPPORT SYSTEM	Fails to Tripped Condition?	MODE OF APPLICABILITY
1.	LCO 3.9.2, Source Range Audible Count Rate	No	6
2.	LCO Table 3.3.6-1, Functions 3.a, 3.b and 3.c (CREATS Intake Radiation Monitors)	Yes	1,2,3,4,5,6, and Movement of irradiated fuel
3.	LCO Table 3.3.1-1, Function 2 (N-44)	Yes	1,2
4.	LCO Table 3.3.1-1, Function 5 (OTDT Channel 4)	Yes	1,2
5.	LCO Table 3.3.3-2, Functions 5b and 6c (SG A LT-463)	Yes	1,2,3
6.	LCO Table 3.3.3-2, Functions 5b and 6c (SG B LT-471)	Yes	1,2,3
7.	LCO Table 3.3.3-2, Functions 4d and 4e (SG B FT-475)	Yes	1,2,3
8.	LCO Table 3.3.3-1, Function 1 (Pzr Pressure PT-449)	Yes	1,2,3
9.	LCO Table 3.3.3-1, Function 23 (SG A LT-463)	Yes	1,2,3
10.	LCO Table 3.3.3-1, Function 24 (SG B LT-471)	Yes	1,2,3
11.	TR Table 3.3.1-1, Functions 1 and 2 (CREATS Toxic Gas Instrumentation)	Yes	1,2,3,4,5,6

3.9 REFUELING OPERATIONS

TR 3.9.1 Fuel Storage in Spent Fuel Pool (SFP)

TR 3.9.1 Fuel assembly storage in the SFP shall be maintained as follows:

a. Fuel assemblies stored in Region 1 of the SFP which have decayed < 60 days since being irradiated shall be stored in a checkerboard pattern.

b. Each fuel assembly stored in Region 2 of the SFP shall have decayed ≥ 60 days since being irradiated.

APPLICABILITY: Whenever any irradiated fuel assembly is stored in the SFP.

ACTIONS

CONDITION	REQUIRED ACTION	COMPLETION TIME
A. Requirements of the TR not met for either region.	A.1 Initiate action to move the noncomplying fuel assembly to an acceptable storage location.	Immediately

SURVEILLANCE REQUIREMENTS

SURVEILLANCE		FREQUENCY
TSR 3.9.1.1	Verify each fuel assembly which has decayed < 60 days since being irradiated is being stored in a checkerboard pattern.	Once prior to storing fuel assembly in Region 1
TSR 3.9.1.2	Verify each fuel assembly has decayed ≥ 60 days since being irradiated.	Once prior to storing fuel assembly in Region 2

3.9 REFUELING OPERATIONS

TR 3.9.2 Fuel Assembly Movement in Auxiliary Building

TR 3.9.2 During movement of irradiated fuel assemblies, the following shall be met:

a. Radiation levels in the spent fuel pool (SFP) area shall be monitored continuously; and

b. A load in excess of one fuel assembly and its handling tool shall not be stationed or transferred over the storage racks containing spent fuel.

- NOTE -

The load restriction is not applicable for movement of consolidated fuel rod canisters if the spent fuel racks beneath the transported canister only contain fuel which has decayed ≥ 60 days since being irradiated.

APPLICABILITY: During movement of irradiated fuel assemblies in the operating floor area of the Auxiliary Building.

ACTIONS

CONDITION	REQUIRED ACTION	COMPLETION TIME
A. Radiation levels not continuously monitored. OR Load restriction not met.	A.1 Suspend movement of irradiated fuel assemblies.	Immediately

SURVEILLANCE REQUIREMENTS

SURVEILLANCE		FREQUENCY
TSR 3.9.2.1	Verify no load in excess of one fuel assembly and its handling tool is stationed or transferred over the storage racks.	Once prior to moving loads over the storage racks containing spent fuel

SURVEILLANCE		FREQUENCY
TSR 3.9.2.2	Verify radiation monitoring in SFP area is OPERABLE.	24 hours

3.9 REFUELING OPERATIONS

TR 3.9.3 Refueling Manipulator Crane Interlocks

TR 3.9.3 The refueling manipulator crane interlocks shall be OPERABLE.

APPLICABILITY: During refueling operations with fuel in the vessel.

ACTIONS

CONDITION	REQUIRED ACTION	COMPLETION TIME
A. Refueling manipulator crane interlocks inoperable.	A.1 Suspend use of refueling manipulator crane.	Immediately
	OR	
	A.2 Initiate action to administratively control inoperable interlock feature(s).	Immediately

SURVEILLANCE REQUIREMENTS

SURVEILLANCE		FREQUENCY
TSR 3.9.3.1	Verify the refueling manipulator crane interlocks are OPERABLE.	Once prior to refueling operations

3.9 REFUELING OPERATIONS

TR 3.9.4 Full Core Offload for Cycle 27

TR 3.9.4 For the removal of all irradiated fuel assemblies from the reactor to the spent fuel pool (SFP), the following shall be met:

a. Two SFP cooling systems shall be OPERABLE, each commensurate with the SFP heat load; and

b. The combination of the following screenhouse bay water temperature (T) and in-reactor decay time shall be met:

Screenhouse Bay Water Temperature, °F	Minimum In-Reactor Decay Time, hrs.
$T \leq 60$	132
$60 < T \leq 80$	280

- NOTE -

1. The SFP heat load and SFP cooling system capabilities are determined by Nuclear Engineering Services.

2. The combination of screenhouse bay water temperature and minimum in-reactor decay time is cycle/outage specific.

APPLICABILITY: During the complete removal of irradiated fuel assemblies from the reactor to the SFP, and until the reactor has been refueled.

ACTIONS

CONDITION	REQUIRED ACTION	COMPLETION TIME
A. One required SFP cooling system inoperable.	A.1 Suspend movement of irradiated fuel assemblies from the reactor to the SFP.	Immediately
	AND	
	A.2 Initiate action to restore a second SFP cooling system to OPERABLE status.	Immediately

CONDITION		REQUIRED ACTION		COMPLETION TIME
B.	Combination of screenhouse bay water temperature and minimum in-reactor decay time not met.	B.1	Suspend movement of irradiated fuel assemblies from the reactor to the SFP.	Immediately

SURVEILLANCE REQUIREMENTS

SURVEILLANCE		FREQUENCY
TSR 3.9.4.1	Verify two SFP cooling systems are OPERABLE, each commensurate with the SFP heat load associated with the full core offload.	Once prior to moving irradiated fuel assemblies from the reactor to the SFP
TSR 3.9.4.2	Verify combination of the screenhouse bay water temperature and minimum in-reactor decay time met.	Once prior to moving irradiated fuel assemblies from the reactor to the SFP and every 24 hours thereafter

B 3.9 REFUELING OPERATIONS

TRB 3.9.1 Fuel Storage in Spent Fuel Pool (SFP)

BASES

BACKGROUND

The spent fuel pool (SFP) is divided into two separate and distinct regions. Region 1, with 294 storage positions, is designed to accommodate new or spent fuel utilizing a checkerboard arrangement. Lead-in funnels are provided on some cells that are allowed to contain fresh fuel. Region 2, with 1075 storage positions, is designed to accommodate fuel of various initial enrichments which have accumulated minimum burnups within the acceptable domains according to LCO 3.7.13 and a minimum decay time since being irradiated.

In addition to intact fuel assemblies, consolidated fuel canisters can also be stored in Region 1 and Region 2 of the pool. This process involves placing spent fuel containing, at most, all the rods from two standard spent fuel assemblies, which have decayed at least 5 years, into one canister. The canisters are designed to hold 358 fuel rods and can be placed in either Region 1 or Region 2 rack locations. The canisters containing consolidated fuel are considered a heavy load per NUREG-0612 criteria. They may be carried over stored fuel assemblies provided that the spent fuel racks beneath the transported canister contain only spent fuel that has decayed at least 60 days since reactor shutdown.

For each region, the cooling water flow for the hottest spent fuel assembly has been analyzed (Ref. 1). The maximum fuel clad and water exit temperature were calculated with the assumption of maximum decay heat based on a minimum shutdown time of 100 hours for Region 1 fuel assemblies and 60 days for Region 2 fuel assemblies.

APPLICABLE SAFETY ANALYSES

The postulated event in the SFP associated with this TR is a tornado missile impact. Analyses (Ref. 1) have been performed to determine the radiological releases caused by damage to stored spent fuel from the impact of a tornado missile. Since the pool is divided into two regions, it is possible that the hypothetical tornado missile could impact and damage spent fuel stored in either region. Due to the missile diameter and the fuel cell pitch in both regions, the design missile would damage a total of nine fuel storage cells in either region. The assumptions of the analyses performed are that fuel in Region 1 has decayed a minimum time of 100 hours and that freshly off-loaded fuel is stored in a checkerboard pattern, and that the fuel in Region 2 has decayed a minimum of 60 days. Due to the two separate decay times, accidents occurring in either region can have varying radiological consequences, with Region 1 being the most limiting. The worst case configuration

would be five freshly off-loaded assemblies (100 hours) and four decayed assemblies (60 days). The fuel storage requirements of this TR ensure that the release of fission product radioactivity, due to the tornado missile occurring in either Region 1 or Region 2, results in doses that are within the guideline values specified in 10 CFR 100.

TR

This TR limits the consequences of a tornado missile event by limiting the potential fission product radioactivity released from the SFP. The TR requires that any fuel stored in Region 1 that has decayed < 60 days since being irradiated be stored in a checkerboard pattern. This preserves the analysis assumption of no more than five assemblies with < 60 day decay being potentially impacted. Therefore, it is acceptable for empty cells, fuel decayed ≥ 60 days since being irradiated, new fuel, or non-fuel bearing components to make up the alternating cells of the checkerboard pattern. The TR also preserves the assumption of Region 2 containing irradiated fuel which has decayed ≥ 60 days.

APPLICABILITY

This TR applies whenever any fuel assembly is stored in the SFP.

ACTIONS

A.1

When the configuration of fuel assemblies stored in either Region 1 or Region 2 of the SFP is not within the TR requirements, the immediate action is to initiate action to make the necessary fuel assembly movement(s) to bring the configuration into compliance. This compliance can be made by relocating the fuel assembly to a different region or to an acceptable new location within the same region.

SURVEILLANCE REQUIREMENTS

TSR 3.9.1.1 and TSR 3.9.1.2

These TSR require verification by administrative means that the decay time of the fuel assembly since being irradiated and location are in accordance with the TR prior to storage in Region 1 or Region 2. Once a fuel assembly has been verified to be within the requirements, further verifications are no longer required.

REFERENCES

1. R.E. Ginna Nuclear Power Plant Spent Fuel Pool Re-racking Licensing Report, dated February 1997.

B 3.9 REFUELING OPERATIONS

TRB 3.9.2 Fuel Assembly Movement in Auxiliary Building

BASES

* To be provided later.

B 3.9 REFUELING OPERATIONS

TRB 3.9.3 Refueling Manipulator Crane Interlocks

BASES

* To be provided later.

B 3.9 REFUELING OPERATIONS

TRB 3.9.4 Full Core Offload for Cycle 27

BASES

BACKGROUND

The Background section for TRM Bases 3.7.7, "Spent Fuel Pool (SFP) Cooling System" is applicable to these Bases.

APPLICABLE SAFETY ANALYSES

For structural integrity reasons, the pool water temperature is not to exceed 180°F. In order to provide sufficient time to take corrective action in the event of a SFP Cooling System failure, the pool temperature limit is not to exceed 150°F for a full core discharge. The requirement for two 100% SFP Cooling Systems is based on being able to provide cooling following either a loss of offsite power or an active single failure within the SFP Cooling System.

TR

To ensure that the SFP temperature can be maintained within the required limit, two SFP Cooling Systems must be OPERABLE. This requirement provides for 100% backup capability assuming the failure of one system. SFP Cooling System loop A and loop B are considered OPERABLE when the respective pump has power available and the respective heat exchanger is capable of providing cooling water with the ability to remove the decay heat load of the irradiated fuel assemblies stored within the SFP. The standby loop is considered OPERABLE when the skid-mounted SFP pump has power connected to a temporary power source, the SFP standby heat exchanger has been staged, and the temporary hoses have been connected and leak checked. During a full core offload the SFP Cooling System loop A and standby loop may be operated in parallel to comprise one of the required OPERABLE systems. Loop A and the standby loop have the ability to utilize fire water for cooling in lieu of SW to provide for increased redundancy. The temporary electrical power source for the standby loop pump may also be varied to provide for increased redundancy.

Also included in the determination of OPERABILITY are all necessary support systems not addressed by this TR (e.g., service water, fire water, electrical). Single active failures are not required to be considered within the support systems for the purpose of this TR; however, the support systems must be capable of performing their support function per the definition of OPERABLE-OPERABILITY in ITS Section 1.1.

The SFP heat load will increase as the number of irradiated fuel assemblies stored in the SFP increases. In order to maintain the SFP temperature below the limit of 150°F, the irradiated fuel assemblies must be held in the core for a minimum amount of time following reactor shutdown to ensure that the total SFP heat load is less than the heat removal capability of the SFP Cooling System. Since the heat removal capability of the SFP Cooling System is a function of the cooling source, analyses have been performed to establish the required decay time following reactor shutdown (Minimum In-Reactor Decay Time) in relation to screenhouse bay water temperature.

It is possible for the SFP Cooling System loop A and the standby loop by themselves to each comprise a system capable of removing the decay heat of the stored irradiated fuel assemblies stored in the SFP based on time after shutdown and screenhouse bay water temperature. The determination of the combination of screenhouse bay water temperature and time after shutdown for this condition is determined by Nuclear Engineering Services.

The TR is modified by two notes. The first note is associated with the SFP heat load and SFP Cooling System capabilities. The SFP heat load from the irradiated fuel assemblies stored within the SFP is a variable based on the total number of assemblies stored, the power history of the individual assemblies, and the time since the assemblies were last irradiated. The heat removal capabilities of the individual SFP cooling loops is also a variable based on the temperature and flow rate of the cooling source, SW or fire water. The SFP heat load and the SFP Cooling System heat removal capabilities are determined by Nuclear Engineering Services and provided, as necessary, based on plant conditions.

The second note has been provided to emphasize that the listed Minimum In-Reactor Decay Times as a function of screenhouse bay water temperature are only applicable for a specific offload. These values require Nuclear Engineering Services analysis each outage.

APPLICABILITY

This TR applies during any plant outage when it is intended to completely defuel the reactor and specifies the requirements that must be met prior to initiating the offload of irradiated fuel assemblies and up to the point at which the reactor has been refueled. Specific requirements applicable anytime there is an irradiated fuel assembly stored in the SFP are covered by TR 3.7.7, "Spent Fuel Pool (SFP) Cooling System".

ACTIONS

A.1 and A.2

With one of the required SFP Cooling Systems inoperable, suspending any operation that would increase SFP decay heat load, such as discharging an irradiated fuel assembly, is a prudent action under this condition. Therefore, actions shall be taken immediately to suspend movement of irradiated fuel assemblies from the core to the SFP.

If only one SFP Cooling System is OPERABLE, redundancy for SFP cooling is lost. Action must be initiated to restore a second system to OPERABLE status. The immediate Completion Time reflects the importance of maintaining the availability of redundancy for SFP heat removal during the time that there is a high heat load in the SFP. The action to restore must continue until the second SFP Cooling System is restored to OPERABLE status.

B.1

If the screenhouse bay temperature and in-reactor decay time requirement is not met, suspending any operation that would increase SFP decay heat load, such as discharging an irradiated fuel assembly, is a prudent action under this condition. Therefore, actions shall be taken immediately to suspend movement of irradiated fuel assemblies from the core to the SFP. With the screenhouse bay temperature and in-reactor decay time requirements not met, the assumptions of the SFP Cooling System heat removal analyses are invalid and the potential exists for the SFP temperature to exceed the limit required for SFP structural integrity.

SURVEILLANCE REQUIREMENTS

TSR 3.9.4.1

This TSR requires verification prior to commencing a complete core offload of irradiated fuel assemblies that two SFP Cooling Systems are OPERABLE, each of which must be able to meet the SFP heat removal requirement associated with the complete offload. Verification of loop A and loop B includes verifying that the respective pump has power available and the respective heat exchanger is capable of providing cooling water with the ability to remove the decay heat load of the irradiated fuel assemblies planned to be stored within the SFP. Verification of the standby loop includes verifying that the Skid-Mounted SFP Pump has power connected to a temporary power source, the SFP Standby Heat Exchanger has been staged, and the temporary hoses have been connected and leak checked. SFP Cooling System loop A

and standby loop may be operated in parallel to comprise one of the required OPERABLE systems.

TSR 3.9.4.2

This TSR requires verification of the screenhouse bay water temperature (normally performed by using either TT-3001 or TT-2977) and in-reactor decay time of the irradiated fuel assemblies to confirm that the assumptions of the SFP Cooling System heat removal analyses are being met. This surveillance is required prior to commencing a complete core offload of irradiated fuel assemblies every 24 hours thereafter, which is considered reasonable based on operating experience.

REFERENCES

1. UFSAR, Section 9.1.3.

4.0 DESIGN FEATURES

TR 4.0 Design Features

There are no technical requirements associated with this Chapter.

5.0 ADMINISTRATIVE CONTROLS

TR 5.1 Temporary LCO Requirements

This section defines additional administrative restrictions placed on systems, structures, and components (SSCs) which are addressed within the ITS in order to ensure that they remain OPERABLE with respect to their ITS requirements. These are temporary requirements only until the ITS can be modified via a license amendment request, plant modification with a subsequent bases change, etc. Table TR 5.1-1 contains the listing of temporary LCO requirements and all associated background information.

Table TR 5.1-1
Temporary LCO Requirements

Item	Action Report #	Temporary LCO Requirement	Required Actions If Not Met	Effective Dates
5.1.1	97-0783	a. Verify key switches for MOVs 852A and 852B are in "off position" every 31 days.	a. Declare associated ECCS train inoperable per LCO 3.5.2.	6/19/97 until LCO 3.5.2 is changed
5.1.2	97-0894	a. Verify NaOH System tank NaOH solution concentration is ≤ 35% by weight every 184 days.	a. Declare NaOH system inoperable per LCO 3.6.6.	6/19/97 until LCO 3.6.6 is changed.