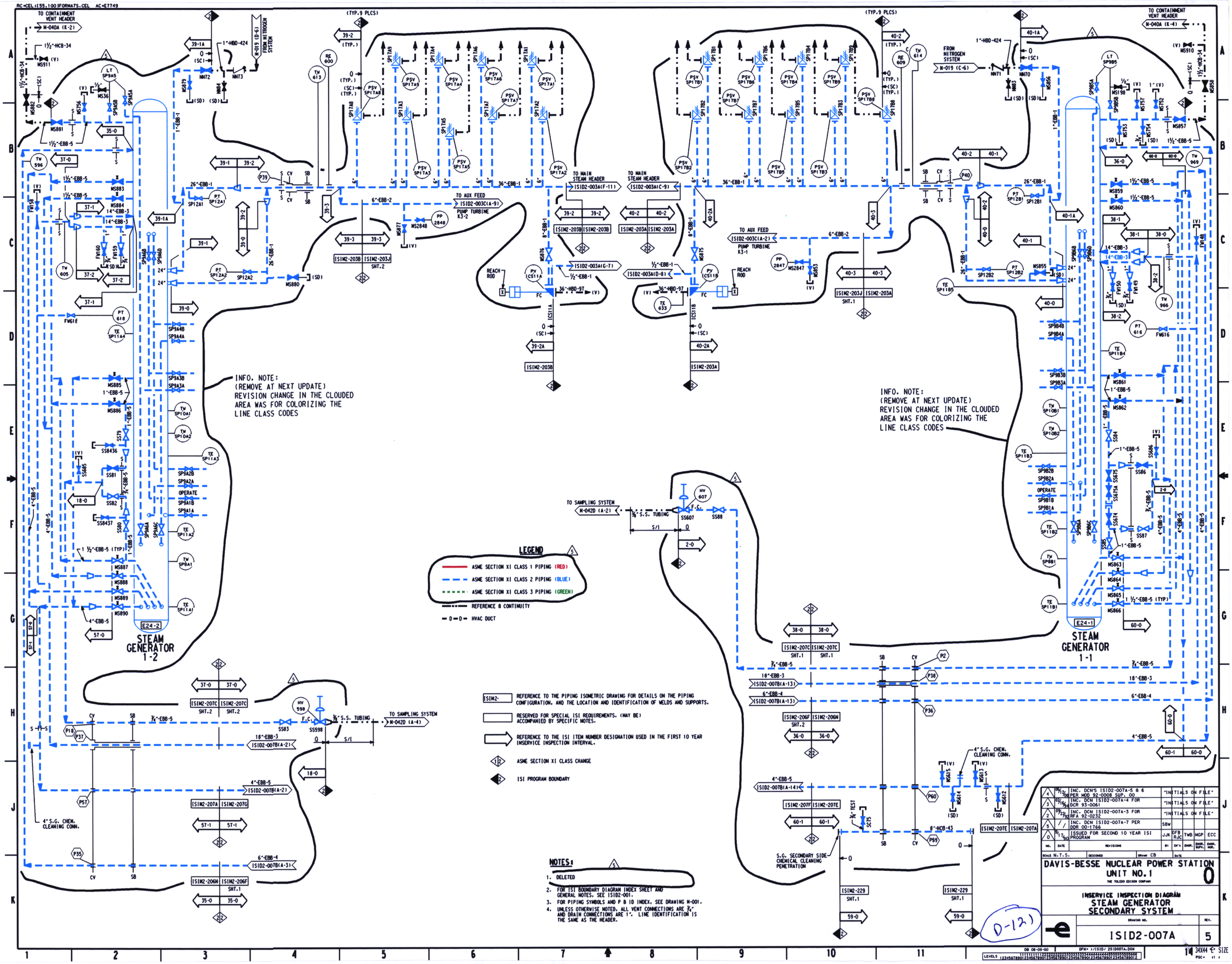

TO CONTAINMENT VENT HEADER
M-040A (K-2)
M-040A (K-4)
FROM NITROGEN SYSTEM
M-019 (D-6)
M-019 (C-6)
TO MAIN STEAM HEADER
ISID2-003A(F-11)
ISID2-003A(C-9)
TO AUX FEED
ISID2-003C(A-9)
PUMP TURBINE K3-2
ISID2-003C(A-2)
PUMP TURBINE K3-1
ISID2-003A(G-7)
ISID2-003A(D-8)
REACH ROD
INFO. NOTE:
(REMOVE AT NEXT UPDATE)
REVISION CHANGE IN THE CLOUDED AREA WAS FOR COLORIZING THE LINE CLASS CODES
TO SAMPLING SYSTEM
M-042D (A-2)
TO SAMPLING SYSTEM
M-042D (A-4)
STEAM GENERATOR 1-2
STEAM GENERATOR 1-1
4" S.G. CHEM. CLEANING CONN.
S.G. SECONDARY SIDE CHEMICAL CLEANING PENETRATION
LEGEND
ASME SECTION XI CLASS 1 PIPING (RED)
ASME SECTION XI CLASS 2 PIPING (BLUE)
ASME SECTION XI CLASS 3 PIPING (GREEN)
REFERENCE 8 CONTINUITY
HVAC DUCT
ISIM2- REFERENCE TO THE PIPING ISOMETRIC DRAWING FOR DETAILS ON THE PIPING CONFIGURATION, AND THE LOCATION AND IDENTIFICATION OF WELDS AND SUPPORTS.
RESERVED FOR SPECIAL ISI REQUIREMENTS. (MAY BE) ACCOMPANIED BY SPECIFIC NOTES.
REFERENCE TO THE ISI ITEM NUMBER DESIGNATION USED IN THE FIRST 10 YEAR INSERVICE INSPECTION INTERVAL.
ASME SECTION XI CLASS CHANGE
ISI PROGRAM BOUNDARY
NOTES:
1. DELETED
2. FOR ISI BOUNDARY DIAGRAM INDEX SHEET AND GENERAL NOTES, SEE ISID2-001.
3. FOR PIPING SYMBOLS AND P & ID INDEX, SEE DRAWING M-001.
4. UNLESS OTHERWISE NOTED, ALL VENT CONNECTIONS ARE 3/4" AND DRAIN CONNECTIONS ARE 1". LINE IDENTIFICATION IS THE SAME AS THE HEADER.
D-121
4 06/12/00 INC. DCN'S ISID2-007A-5 & 6 PER MOD 92-0008 SUP. 00 "INITIALS ON FILE"
3 02/16/94 INC. DCN ISID2-007A-4 FOR DCR 93-0061 "INITIALS ON FILE"
2 09/22/92 INC. DCN ISID2-007A-3 FOR RFA 92-0232 "INITIALS ON FILE"
5 / / INC. DCN ISID2-007A-7 PER DDR 00-1766 SBW
0 9/17/90 ISSUED FOR SECOND 10 YEAR ISI PROGRAM JJK DFB RJC TWB MGP ECC
NO. DATE REVISIONS BY CH'K ENGR. ENGR. SUPV. ENGR. MGR.
SCALE N.T.S. DESIGNED DRAWN CB DATE
DAVIS-BESSE NUCLEAR POWER STATION
UNIT NO.1
THE TOLEDO EDISON COMPANY
0
INSERVICE INSPECTION DIAGRAM
STEAM GENERATOR SECONDARY SYSTEM
DRAWING NO.
ISID2-007A
REV.
5
34X44 "E" SIZE