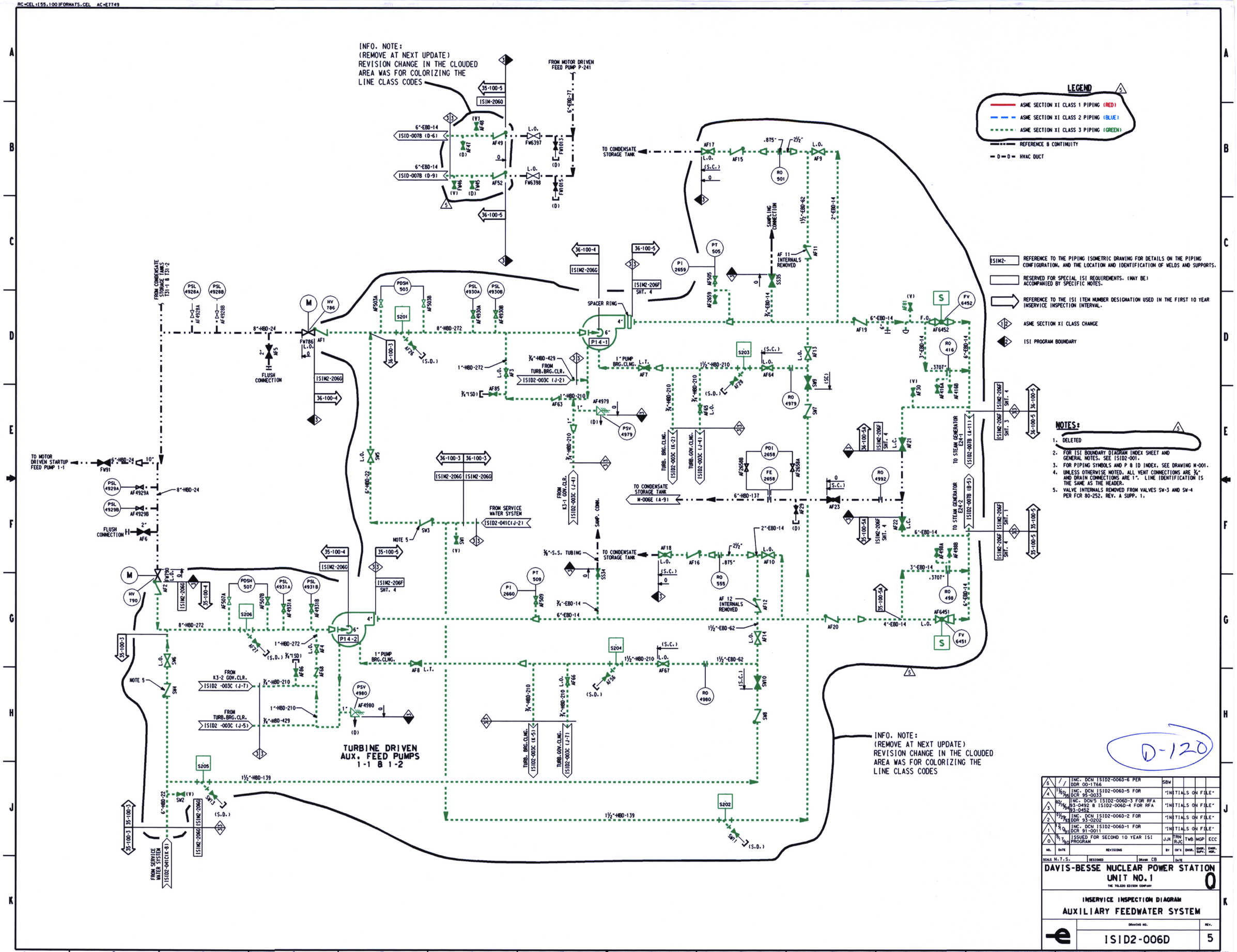

NO.	DATE	REVISIONS	BY	CH'K	ENGR.	ENGR. SUPV.	ENGR. MGR.
5	/ /	INC. DCN ISID2-006D-6 PER DDR 00-1766	SBW				
4	11/07/95	INC. DCN ISID2-006D-5 FOR DCR 95-0033	"INITIALS ON FILE"				
3	02/16/94	INC. DCN'S ISID2-006D-3 FOR RFA 93-0492 & ISID2-006D-4 FOR RFA 93-0452	"INITIALS ON FILE"				
2	01/29/93	INC. DCN ISID2-006D-2 FOR DDR 93-0202	"INITIALS ON FILE"				
1	12/10/91	INC. DCN ISID2-006D-1 FOR DCR 91-0011	"INITIALS ON FILE"				
0	9/17/90	ISSUED FOR SECOND 10 YEAR ISI PROGRAM	JJK	TRN RJC	TWB	MGP	ECC

SCALE N.T.S. DESIGNED DRAWN CB DATE

DAVIS-BESSE NUCLEAR POWER STATION
UNIT NO. 1
THE TOLEDO EDISON COMPANY

0

INSERVICE INSPECTION DIAGRAM
AUXILIARY FEEDWATER SYSTEM

DRAWING NO. ISID2-006D REV. 5

DB 08-09-00 DFN= r/ISID /2SID006D.DGN

14 34X44 "E" SIZE