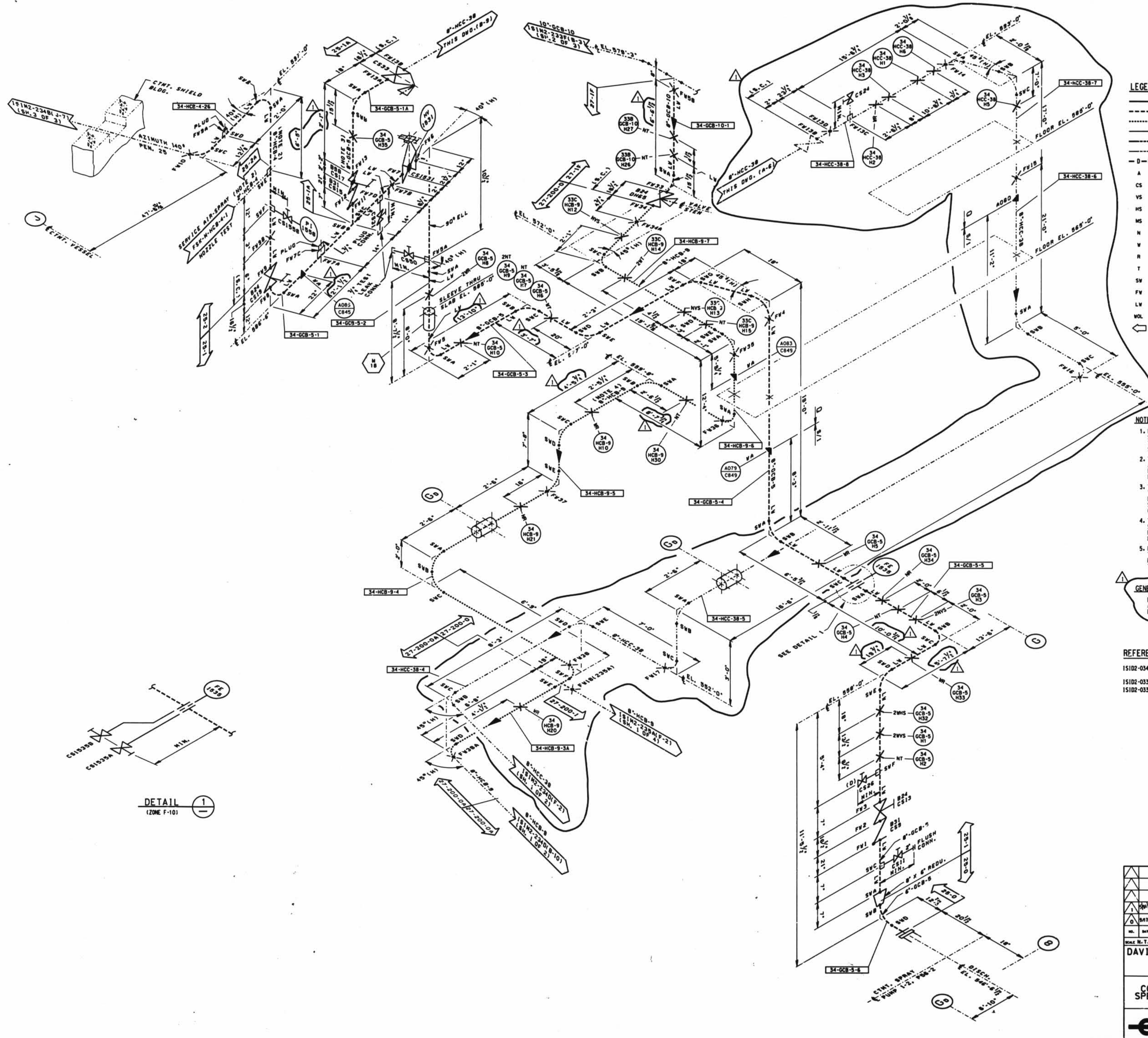

LEGEND

———	ASME SECTION XI CLASS 1 PIPING
- - - -	ASME SECTION XI CLASS 2 PIPING
....	ASME SECTION XI CLASS 3 PIPING
———	NON-ISI NUCLEAR CLASS AND HSC CLASS
—-—-	PRESSURE BOUNDARY EXTENSION
—·—·—	REFERENCE & CONTINUITY
— D — D —	HVAC DUCT
A	ANCHOR
CS	CONSTANT SPRING HANGER
VS	VARIABLE SPRING HANGER
HS	HYDRAULIC SNUBBER
MS	MECHANICAL SNUBBER
N	NON-WELDED SUPPORT ATTACHMENT
W	WELDED INTEGRAL SUPPORT ATTACHMENT
R	RIGID SUPPORT
T	SWAY STRUT
SW	SHOP WELD
FW	FIELD WELD
LW	LONGITUDINAL WELD
WOL	WELDOLET
⇦	ISI ITEM NUMBER DESIGNATION USED IN THE FIRST 10 YEAR INSERVICE INSPECTION INTERVAL.

NOTES:

1. MULTIPLE SWAY STRUTS, SPRING SUPPORTS OR SNUBBERS IN A SINGLE PIPING SUPPORT ARE SHOWN BY A NUMBER BEFORE THE SUPPORT TYPE. (EXAMPLE: 2NHS - TWO HYDRAULIC TYPE SNUBBERS THAT ARE NOT WELDED INTEGRAL TO THE PIPE).
2. THE CONTAINMENT SPRAY LINE 2"-HCB-4 & 8"-HCB-4 WELDS AND SUPPORTS ARE EXEMPT FROM INSERVICE EXAMINATION REQUIREMENTS PER IWC 1220. THE WELDS AND SUPPORTS SHOWN MAY NOT REPRESENT THE ACTUAL AS-BUILT CONDITION.
3. THE SPENT FUEL POOL COOLING LINE 8"-GCB-5 FROM VLV. CS33 TO VLV. CS17 WELDS AND SUPPORTS ARE EXEMPT FROM INSERVICE EXAMINATION REQUIREMENTS PER IWC 1220. THE WELDS AND SUPPORTS SHOWN MAY NOT REPRESENT THE ACTUAL AS-BUILT CONDITION.
4. THE SPENT FUEL POOL COOLING LINE 8"-HCB-9 WELDS AND SUPPORTS ARE EXEMPT FROM INSERVICE EXAMINATION REQUIREMENTS PER IWD 1220. THE WELDS AND SUPPORTS SHOWN MAY NOT REPRESENT THE ACTUAL AS-BUILT CONDITION.
5. PIPING SYSTEMS ON THIS DRAWING WHICH ARE OUTSIDE OF THE ISI BOUNDARY, ARE SHOWN FOR REFERENCE AND CONTINUITY PURPOSES ONLY. THE CONFIGURATION SHOWN MAY NOT REPRESENT THE ACTUAL AS-BUILT CONDITION.

△1 GENERAL NOTE:

DIMENSIONS SHOWN ON THIS DRAWING ARE TO BE USED FOR APPROXIMATE LOCATION ONLY. USE DESIGN DRAWINGS FOR DIMENSIONAL VERIFICATION.

REFERENCE DRAWINGS:

- ISID2-034 EMERGENCY CORE COOLING SYSTEM - CONTAINMENT SPRAY AND CORE FLOODING SYSTEMS
- ISID2-033B DECAY HEAT TRAIN 1
- ISID2-033A HIGH PRESSURE INJECTION

NO.	DATE	REVISIONS	BY	CH'K	ENGR.	ENGR. SUPV.	ENG. MGR.
1	5/91 RB	INC DCN ISIM2-234D-2 FOR FOR DCR 91-0011	JOR	[signature]	[signature]	[signature]	
0	9/17/90	ISSUED FOR SECOND 10 YEAR ISI PROGRAM	CB	EFB	LLC	MGP	ECC

SCALE N.T.S. DESIGNED DRAWN CB DATE

DAVIS-BESSE NUCLEAR POWER STATION UNIT NO.1

THE TOLEDO EDISON COMPANY

Q

INSERVICE INSPECTION ISOMETRIC
CONTAINMENT SPRAY SYSTEM AND SPENT FUEL POOL COOLING SYSTEM
AUXILIARY BUILDING PUMP 1-2 DISCHARGE

DRAWING NO. ISIM2-234D SHEET 2 REV. 1

DB 02-11-92 DFN=F:/ISIM/2IM234D1.DGN 34X44 E SIZE

I CERTIFY THAT THE IMAGE CONTAINED ON THIS FRAME WAS MADE IN THE NORMAL AND REGULAR COURSE OF BUSINESS, ON THE DATE STATED BELOW AND THAT IT IS AN ACCURATE REPRODUCTION OF THE RECORD(S) SUBMITTED TO NUCLEAR RECORDS MANAGEMENT.
DATE 5-22-92 OPERATOR [signature] 30X

D-43