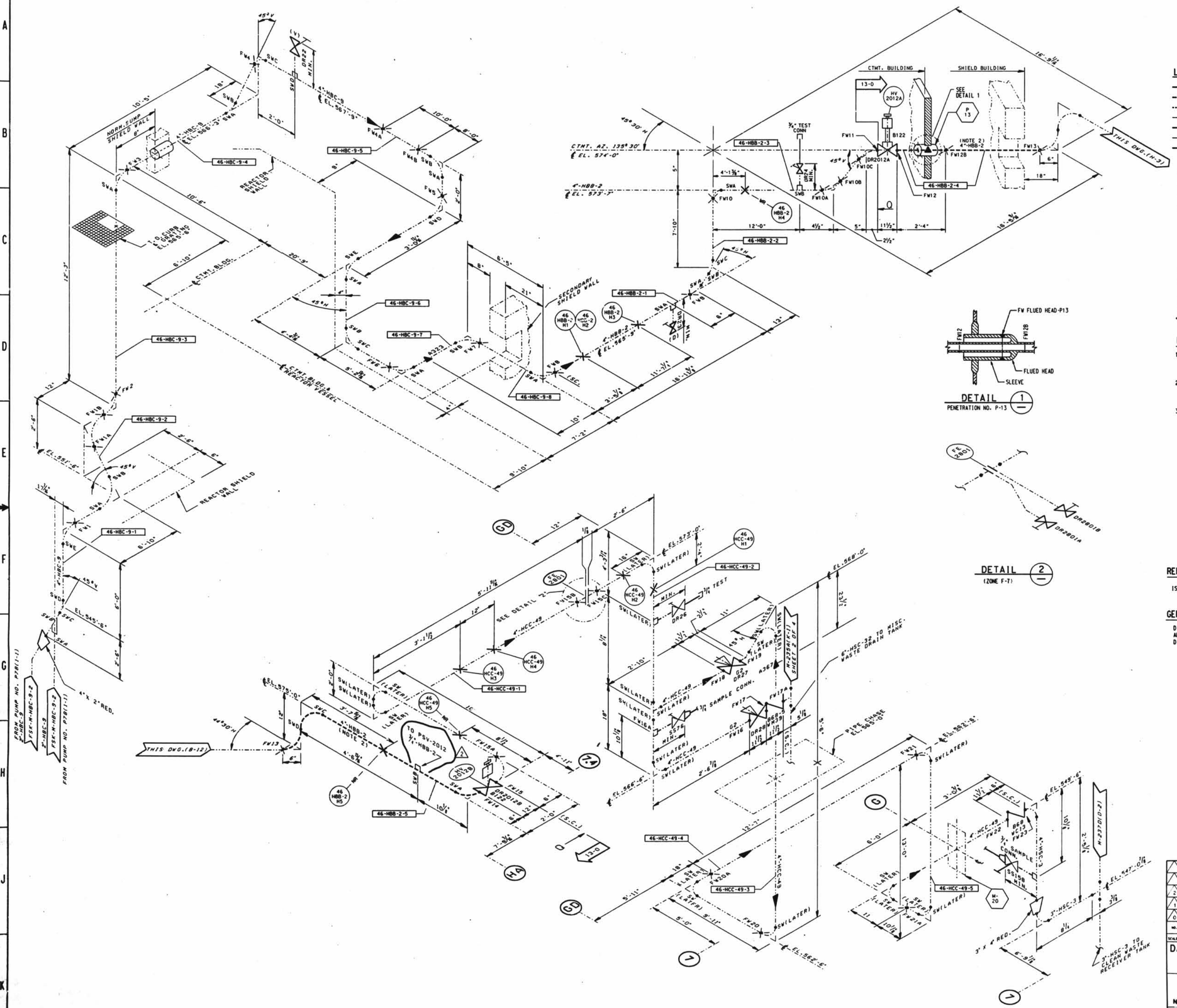

LEGEND

- ASME SECTION XI CLASS 1 PIPING
- ASME SECTION XI CLASS 2 PIPING
- ASME SECTION XI CLASS 3 PIPING
- NON-ISI NUCLEAR CLASS AND HSC CLASS
- PRESSURE BOUNDARY EXTENSION
- REFERENCE & CONTINUITY
- D—D— HVAC DUCT
- A ANCHOR
- CS CONSTANT SPRING HANGER
- VS VARIABLE SPRING HANGER
- HS HYDRAULIC SNUBBER
- MS MECHANICAL SNUBBER
- N NON-WELDED SUPPORT ATTACHMENT
- W WELDED INTEGRAL SUPPORT ATTACHMENT
- R RIGID SUPPORT
- T SWAY STRUT
- SW SHOP WELD
- FW FIELD WELD
- LW LONGITUDINAL WELD
- WOL WELDOLET
- ⇦ ISI ITEM NUMBER DESIGNATION USED IN THE FIRST 10 YEAR INSERVICE INSPECTION INTERVAL.

NOTES:

1. MULTIPLE SWAY STRUTS, SPRING SUPPORTS OR SNUBBERS IN A SINGLE PIPING SUPPORT ARE SHOWN BY A NUMBER BEFORE THE SUPPORT TYPE. (EXAMPLE: 2HS5 - TWO HYDRAULIC TYPE SNUBBERS THAT ARE NOT WELDED INTEGRAL TO THE PIPE).
2. THE LIQUID RADWASTE LINE 4"-HBB-2 WELDS AND SUPPORTS ARE EXEMPT FROM INSERVICE EXAMINATION REQUIREMENTS PER IWC 1220. THE WELDS AND SUPPORTS SHOWN MAY NOT REPRESENT THE ACTUAL AS-BUILT CONDITION.
3. PIPING SYSTEMS ON THIS DRAWING WHICH ARE OUTSIDE OF THE ISI BOUNDARY, ARE SHOWN FOR REFERENCE AND CONTINUITY PURPOSES ONLY. THE CONFIGURATION SHOWN MAY NOT REPRESENT THE ACTUAL AS-BUILT CONDITION.

REFERENCE DRAWINGS:

ISID2-046 STATION DRAINAGE SYSTEMS

GENERAL NOTE:

DIMENSIONS SHOWN ON THIS DRAWING ARE TO BE USED FOR APPROXIMATE LOCATION ONLY. USE DESIGN DRAWINGS FOR DIMENSIONAL VERIFICATION.

NO.	DATE	REVISIONS	BY	CH'K	ENGR.	ENGR. SUPV.	ENG. MGR.
2	7/6/98	INC DCN ISIM2-246A-3 PER MOD 97-0009 SUP. 01	SBW				
1	9/25/92	INC DCN ISIM2-246A-1 FOR DCR 91-0011 & INC DCN ISIM2-246A-2 FOR DCR 91-0104	INITIALS ON FILE				
0	9/17/90	ISSUED FOR SECOND 10 YEAR ISI PROGRAM	CB	EFB	LLC	MGP	ECC

SCALE N.T.S. | DESIGNED | DRAWN CB | DATE

DAVIS-BESSE NUCLEAR POWER STATION
UNIT NO. 1
THE TOLEDO EDISON COMPANY

Q

INSERVICE INSPECTION ISOMETRIC
LIQUID RADWASTE SYSTEM
NORMAL SUMP PUMPS DISCHARGE - CTMT.& AUX. BLDGS.

DRAWING NO. ISIM2-246A | REV. 2

DB 06-30-98 | DFN=F:/ISIM/2IM246A.DSN | 14 34X44 SIZE | PSC= 41 1

LEVELS 1234567890123456789012345678901234567890123456789

THE INFORMATION THAT THE IMAGE CONTAINED ON THIS FRAME WAS MADE IN THE NORMAL APPLICABLE AS COURSE OF BUSINESS ON THE DATE STAMPED HEREON AND THAT IT IS THE BEST COPY AVAILABLE TO THE NUCLEAR RECORDS MANAGEMENT DAVIS-BESSE NPS

DATE 7-6-98 OPERATOR

30X

D-91