FirstEnergy

Davis-Besse Nuclear Power Station
5501 North State Route 2
Oak Harbor, Ohio 43449-9760

Guy G. Campbell
Vice President - Nuclear

419-321-8588
Fax: 419-321-8337

Docket Number 50-346

License Number NPF-3

Serial Number 2672

September 19, 2000

United States Nuclear Regulatory Commission
Document Control Desk
Washington, D. C. 20555-0001

Subject: Third Ten-Year Interval Inservice Inspection Program for Davis-Besse Nuclear Power Station Unit 1

Ladies and Gentlemen:

In accordance with 10 CFR 50.55a(g)(5)(ii), The First Energy Nuclear Operating Company (FENOC) has revised the Davis-Besse Nuclear Power Station Unit 1 (DBNPS) Inservice Inspection (ISI) Program. Enclosed is a copy of this program. The third ten-year interval will begin on September 21, 2000.

The third ten-year interval program is based on Section XI of the 1995 Edition and Addenda through the 1996 Addenda, of the American Society of Mechanical Engineers (ASME) Boiler and Pressure Vessel Code. In accordance with 10 CFR 50.55a(g)(4)(ii), Inservice Inspection of components subject to examination during the Third 10-Year Inspection Interval at the DBNPS will comply with the requirements of the specified Code of record referenced by 10CFR50.55a(b) on the date 12 months prior to the start of the Third 10-Year Inspection Interval.

In accordance with 10 CFR 50.55a(g)(4)(iv), inservice examinations may meet the requirements set forth in subsequent editions and addenda incorporated by reference in 10 CFR 50.55a(b). On September 22, 1999, 10 CFR 50.55a was revised (Federal Register 64FR51370) to reference the 1995 Edition and Addenda through the 1996 Addenda instead of the 1989 Edition. The effective date for this change to 10 CFR 50.55a was November 22, 1999. The 1995 Edition through the 1996 Addenda of ASME Section XI will be the Code Edition used for the Third 10-Year Inspection Interval for the DBNPS.

FENOC has determined that conformance with certain Code requirements is impractical at the DBNPS. Relief requests relating to these specific requirements are included in the enclosed program documentation.

This document does not include pump and valve testing (IWP and IWV) commitments, which will be sent to the Nuclear Regulatory Commission (NRC) under a separate document.

A047

Should you have any questions regarding this request, please contact Mr. David H. Lockwood, Manager - Regulatory Affairs, at (419) 321-8450.

Sincerely Yours,

GMW/s

Attachments

COMMITMENT LIST

The following list identifies those actions committed to by the Davis-Besse Nuclear Power Station in this document. Any other actions discussed in the submittal represent intended or planned actions by Davis-Besse. They are described only as information and are not regulatory commitments. Please notify the Manager - Regulatory Affairs (419-321-8450) at Davis-Besse of any questions regarding this document or associated regulatory commitments.

COMMITMENTS	DUE DATE
None	N/A

DAVIS-BESSE NUCLEAR
POWER STATION
UNIT #1

LOCATION: 5501 North State Route 2
Oak Harbor
Ottawa County
Ohio 43449

OWNERS: FIRST ENERGY CORPORATION
5501 N. ST. ROUTE 2
OAK HARBOR, OHIO 43449

REACTOR SUPPLIER: BABCOCK AND WILCOX COMPANY
LYNCHBURG, VA.

ARCHITECT/ENGINEER: BECHTEL POWER CORPORATION
SAN FRANCISCO, CA.

NRC DOCKET NUMBER:	50-346
FACILITY OPERATING LICENSE:	NPF-3
CAPACITY:	2772 Mwt
COMMERCIAL OPERATION DATE:	NOVEMBER 21, 1977

TABLE OF CONTENTS

	SECTION	PAGE
1.0	INTRODUCTION	6
2.0	CODE APPLICABILITY	8
	Construction Permit/Operating License	8
	Construction Code	8
	Inservice Inspection Code Edition	8
	Inspection Interval	9
	Quality Assurance Program	9
	Inservice Inspection Program Scope	10
3.0	ASME SYSTEMS & EXAMINATION BOUNDARIES	19
	Table 1 - Davis-Besse Unit #1 ASME Code Class Systems	21
4.0	ASME SECTION XI APPLICATION CRITERIA AND CODE COMPLIANCE	24
	ASME Class 1	24
	Table 2 - Code Class 1 Examination Schedule	32
	ASME Class 2	66
	Table 3 - Code Class 2 Examination Schedule	71
	ASME Class 3	108
	Table 4 - Code Class 3 Examination Schedule	110
	ASME Class IWE Containment Examinations	125
	Table 5 - Containment Vessel Examination Schedule	127
	Augmented Examinations	130
5.0	SYSTEM PRESSURE TESTS	132
	Class 1 Components	132
	Class 2 Components	132
	Class 3 Components	132
	Class MC Components	133
	Repairs/Replacements	133
	Visual Examinations	133
	Pressure Test Program	133
	Table 6 - Pressure Test Program	134

	SECTION	PAGE
6.0	NONDESTRUCTIVE EXAMINATIONS	179
	Volumetric Examinations	179
	Surface Examinations	184
	Visual Examinations	184
	Qualification of Nondestructive Examination Personnel	184
7.0	INSERVICE INSPECTION REQUIREMENTS FOR SNUBBERS	185
8.0	INSERVICE INSPECTION DRAWINGS	186
	Inservice Inspection Diagrams	186
	Table 7 - Inservice Inspection Diagrams	186
	Inservice Inspection Isometric Drawings and Inservice Inspection Sketches	188
	Table 8 - Inservice Inspection Drawings	189
	Table 9 - Inservice Inspection Sketches	196
9.0	RELIEF REQUESTS	199
10.0	ULTRASONIC (UT) CALIBRATION BLOCKS	294
	Table 10 - Ultrasonic Calibration Standards	296
11.0	REPAIRS AND REPLACEMENTS	302

10-YEAR INSERVICE INSPECTION PROGRAM PLAN
DAVIS-BESSE NUCLEAR POWER STATION UNIT #1

REVISION CONTROL SHEET

REVISION	DATE	DESCRIPTION	APPROVAL	DATE
0	09/20/00	Initial Issue	DEM	09/07/00

10-YEAR INSERVICE INSPECTION PROGRAM PLAN

DAVIS-BESSE NUCLEAR POWER STATION UNIT #1

REVIEW/APPROVAL

PREPARED BY: C.T. Daft DATE: 9-7-00
Inservice Inspection Engineer

REVIEWED BY: Michael D. Shepherd DATE: 9-7-00
Qualified Safety Reviewer

APPROVED BY: [signature] DATE: 9/7/00
Supervisor, Test/Performance Engineering

APPROVED BY: [signature] DATE: 9/7/00
Manager, Plant Engineering

REVIEWED BY: Thomas G Lupp DATE: 9/12/00
Authorized Nuclear Inservice Inspector

1.0 INTRODUCTION

This Program Plan has been prepared to fulfill the Third Interval 10-Year Inservice Inspection (ISI) requirements for the Davis-Besse Nuclear Power Station Unit 1. This Program Plan has been written to meet the inservice inspection requirements specified by the Code of Federal Regulations, 10CFR50.55a. This Plan has also been expanded to include augmented inservice inspection requirements which comply with commitments made to the regulatory authorities and are contained outside the scope and jurisdiction of the American Society of Mechanical Engineers (ASME) Boiler and Pressure Vessel Code, Section XI.

The scope of the Program Plan includes Class 1, 2, and 3 pressure retaining components and their supports and Class MC components. The boundaries of Class 1, 2, and 3 pressure retaining components and their supports are determined using the criteria of 10CFR50.55a and NRC Regulatory Guide 1.26 (2/76), Quality Group Classifications and Standards for Water-, Steam- , and Radiographic-Waste-Containing Components of Nuclear Power Plants. Class 1, 2, 3, and MC components are examined in accordance with the requirements of Section XI of the ASME Boiler and Pressure Vessel Code, "Rules for Inservice Inspection of Nuclear Power Plant Components", 1995 Edition with the 1996 Addenda, as modified by 10 CFR 50.55a.

The basis of the ISI Code Class 1, 2, and 3 boundary classification encompasses those systems that are safety-related (Q) and provide a specific function in shutting down the reactor or in mitigating the consequences of an accident. The Davis-Besse Nuclear Power Station defines shutting down the reactor per Section 7.4.1 of the Updated Safety Analysis Report (USAR) as that station condition in which the reactor is 1.0 percent subcritical and the reactor coolant system temperature and pressure are in the normal operating range. The Davis-Besse Operating License, Appendix A, Technical Specifications define the above condition (safe shutdown) as Mode 3, Hot Standby. The ISI boundary classification will be applied for inspection purposes only.

Repairs, Replacements and Modifications to systems, components and their supports within the scope of the ISI Program will conform to the rules of ASME Section XI, 1995 Edition, 1996 Addenda.

The Program Plan is subject to revision due to plant modifications or changes in the regulatory requirements. Changes that result in deviations from Code requirements will be affected via request for relief from examination. The Program Plan will be updated every 10 years, plus or minus one year, exclusive of plant outages extending more than six months which may further extend the interval end date.

This document does not include pump and valve testing (IWP and IWV) commitments which will be sent to the Nuclear Regulatory Commission (NRC) under a separate document.

2.0 CODE APPLICABILITY

2.1 Construction Permit/Operating License

The Construction Permit for the Davis-Besse Nuclear Power Station Unit #1 was issued on March 24, 1971. The date of issuance of the operating license for the Davis-Besse Nuclear Power Station Unit #1 by the Nuclear Regulatory Commission (NRC) was April 22, 1977. The Facility operating license number is NPF-3.

2.2 Construction Code

2.1.1 The Nuclear Steam Supply System (NSSS) was furnished by Babcock & Wilcox (B&W) and has two Reactor Coolant loops. The NSSS components were fabricated to the requirements of the ASME Section III, 1968 Edition, 1968 Addenda and the NSSS piping was fabricated to ANSI B31.1-1967. The NSSS was installed to the requirements of ASME Section III, 1971 Edition, Summer 71 Addenda.

2.1.2 The remaining Construction Code Class 1, 2, and 3 components were fabricated and installed to the requirements of ASME Section III, 1971 Edition, Summer 71 Addenda.

2.1.3 The Containment Vessel was fabricated and installed to the requirements of the 1968 Edition including the Summer 1969 Addenda of ASME Section III, Subsection B.

2.3 Inservice Inspection Code Edition

In accordance with 10CFR50.55a(g)(4)(ii), Inservice Inspection of components subject to examination during the Third 10-Year Inspection Interval at Davis-Besse will comply with the requirements of the specified Code of record referenced by 10CFR50.55a(b) on the date 12 months prior to the start of the Third 10-Year Inspection Interval (i.e. September 21, 1999).

On September 21, 1999, 10 CFR 50.55a referenced the 1989 Edition of ASME Section XI. On September 22, 1999, 10 CFR 50.55a was revised (Federal Register 64FR51370) to reference the 1995 Edition and Addenda through the 1996 Addenda. The effective date for this change to 10 CFR 50.55a was November 22, 1999.

In accordance with 10 CFR 50.55a(g)(4)(iv), the inservice examinations may meet the requirements set forth in subsequent editions and addenda incorporated by reference in 10 CFR 50.55a(b). As the September 22, 1999 Federal Register revision to 10 CFR

50.55a references the 1995 Edition through the 1996 Addenda of ASME Section XI, the 1995 Edition through the 1996 Addenda of ASME Section XI will be the Code Edition used for the Third 10-Year Inspection Interval for the Davis-Besse Nuclear Power Station.

2.4 Inspection Interval

The beginning of the First 10-Year Inspection Interval for Davis-Besse Nuclear Power Station Unit #1 was November 21, 1977. Subsequently, extended outages of greater than six months duration occurred during the first inspection interval caused the interval to be extended an additional 34 months as permitted by IWA-2400 of ASME Section XI.

The start of the Second 10-Year Inspection Interval was September 21, 1990.

The start of the Third 10-Year Inspection Interval will be September 21, 2000. The Third 10-Year Inspection Interval is divided into three 40-month inspection periods. The inspection periods are scheduled as follows:

Inspection Period	*Dates*	*Number of Outages*
1st Period	From September 21, 2000 to June 1, 2004. This period was extended to June 1, 2004 in accordance with IWA-2430 (d)(3) of ASME Section XI to coincide with the 14th Refueling Outage which is scheduled for Spring 2004.	2
2nd Period	From June 1, 2004 to May 20, 2007	1
3rd Period	From May 21, 2007 to September 20, 2010	2

2.5 Quality Assurance Program

The First Energy Nuclear Operating Company (FENOC) Quality Assurance Program is applicable to the Inservice Inspection Program.

2.6 Inservice Inspection Program Plan Scope

The Davis-Besse Nuclear Power Station Unit #1 Inservice Inspection Program complies with the requirements of Section XI of the ASME Boiler and Pressure Vessel Code, 1995 Edition through the 1996 Addenda as modified by 10CFR 50.55a, Code Cases endorsed in NRC Regulatory Guide 1.147, or NRC approved relief requests.

2.6.1 10 CFR 50.55a

Modifications to the 1995 Edition and through the 1996 Addenda of ASME Section XI contained in 10 CFR 50.55a and applicable to the Davis-Besse Nuclear Power Station Unit #1 are the following:

1. *10 CFR 50.55a(b)(2)(ii) - Pressure-retaining welds in ASME Code Class 1 piping (applies to Table IWB-2500 and IWB-2500-1 and Category B-J)*

   As the Construction Permit for the Davis-Besse Nuclear Power Station Unit #1 was issued prior to July 1, 1978, the extent of examination for Code Class 1 pipe welds will be determined by the requirements of Table IWB-2500 and Table IWB-2600 Category B-J of the 1974 Edition through the 1975 Addenda of ASME Section XI.

2. *10 CFR 50.55a(b)(2)(iii) - Steam generator tubing (modifies Article IWB-2000)*

   Steam Generator tubing will be examined in accordance with the Davis-Besse Unit #1 Technical Specifications.

3. *10 CFR 50.55a(b)(2)(vi) - Effective edition and addenda of Subsection IWE and Subsection IWL*

   Subsection IWE of the 1995 Edition through the 1996 Addenda will be used to implement containment inservice inspection requirements. Subsection IWL is not applicable to the Davis-Besse Nuclear Power Station Unit #1.

4. *10 CFR 50.55a(b)(2)(ix) - Examination of metal containments and the liners of concrete containments*

   (A) When conditions exist in accessible areas that could indicate the presence of or result in degradation to inaccessible areas, the

following information will be provided in the ISI Summary Report required by IWA-6000:

(1) A description of the type and estimated extent of degradation, and the conditions that led to the degradation;
(2) An evaluation of each area, and the result of the evaluation, and;
(3) A description of necessary corrective actions.

(B) The maximum direct examination distance specified in Table IWA-2210-1 will be extended and the minimum illumination requirements specified in Table IWA-2210-1 will be decreased to levels which will detect the conditions or indications for which the visual examination is performed when performing remote visual examinations.

(C) The examinations specified in Examination Category E-B, Pressure Retaining Welds, and Examination Category E-F, Pressure Retaining Dissimilar Metal Welds, will not be performed.

(D) The following will be used as an alternative to the requirements of IWE-2430:

(1) If the examinations reveal flaws or areas of degradation exceeding the acceptance standards of Table IWE-3410-1, an evaluation will be performed to determine whether additional component examinations are required. For each flaw or area of degradation identified which exceeds acceptance standards, the following will be provided in the ISI Summary Report required by IWA-6000:
- A description of each flaw or area, including the extent of degradation, and the conditions that led to the degradation;
- The acceptability of each flaw or area, and the need for additional examinations to verify that similar degradation does not exist in similar components, and;
- A description of necessary corrective actions.

(2) The number and type of additional examinations to ensure detection of similar degradation in similar components.

(E) The general visual examination required by Subsection IWE will be performed once each period.

5. *10 CFR 50.55a(b)(2)(x) - Quality Assurance*

   The First Energy Nuclear Operating Company (FENOC) Quality Assurance Program is applicable to the Inservice Inspection Program.

6. *10 CFR 50.55a(b)(2)(xi) - Class 1 Piping*

   The requirements of IWB-1220 of the 1989 Edition of ASME Section XI will be applied in lieu of the IWB-1220 requirements of the 1995 Edition through the 1996 Addenda.

7. *10 CFR 50.55a(b)(2)(xiii) - Flaws in Class 3 Piping*

   Code Case N-523-1, "Mechanical Clamping Devices for Class 2 and 3 Piping", may be used for Class 3 piping. When applying Code Case N-523-1, all of its provisions shall be applied.

   Code Case N-513, "Evaluation Criteria for Temporary Acceptance of Flaws in Class 3 Piping", may be used. When applying Code Case N-513 all of its provisions shall be applied subject to the following:

   (A) When implementing Code Case N-513, the specific safety factors in paragraph 4.0 must be satisfied.

   (B) Code Case N-513 may not be applied to:
   - (1) Components other than pipe and tube, such as pumps, valves, expansion joints, and heat exchangers;
   - (2) Leakage through a flange gasket;
   - (3) Threaded connections employing nonstructural seal welds for leakage prevention (through seal weld leakage is not a structural flaw, thread integrity must be maintained); and
   - (4) Degraded socket welds.

8. *10 CFR 50.55a(b)(2)(xiv) - Appendix VIII personnel qualification*

   All personnel qualified for performing ultrasonic examinations in accordance with Appendix VIII shall receive 8 hours of annual hands-on training on specimens that contain cracks. This training must be completed no earlier than 6 months prior to performing ultrasonic examinations at Davis-Besse.

9. *10 CFR 50.55a(b)(2)(xv) - Appendix VIII specimen set and qualification requirements.*

   Davis-Besse participates in the Performance Demonstration Initiative (PDI) Program. PDI qualified personnel and procedures will be used to conduct ultrasonic examinations on welds subject to Appendix VIII requirements. PDI meets the modifications of 10 CFR 50.55a(b)(2)(xv).

10. *10 CFR 50.55a(b)(2)(xvi) - Appendix VIII single side ferritic vessel and piping and stainless steel piping examination.*

    Single sided examinations are qualified through the PDI Program for ferritic piping only. Single sided examinations on ferritic vessels and stainless steel piping will only be performed when qualified through the PDI Program.

11. *10 CFR 50.55a(b)(2)(xvii) - Reconciliation of Quality Requirements.*

    In addition to the reconciliation provisions of IWA-4200, replacement items will be purchased in accordance with First Energy Nuclear Operating Company (FENOC) Quality Assurance Program.

12. *10 CFR 50.55a(b)(3)(v) - Subsection ISTD*

    Subsection ISTD, Inservice Testing of Dynamic Restraints (Snubbers) In Light-Water Reactor Power Plants, of the ASME OM Code 1995 Edition up to and including the 1996 Addenda will be not be used in lieu of the examination and testing requirements for snubbers contained in Section XI, IWF-5200(a) and (b) and IWF-5300(a) and (b). The examination and testing of snubbers will be in accordance with the Davis-Besse Unit #1 Technical Specifications. (See Relief Request RR-A18)

2.6.2 ASME Code Cases

The following table lists those ASME Section XI Code Cases that are planned to be used during the Third 10-Year Inservice Inspection Interval. These Code Cases have either been endorsed in NRC Regulatory Guide 1.147, Revision 12 or their use requested via relief request. Additional Code Cases may be utilized when and as endorsed by later revisions to NRC Regulatory Guide 1.147 without further notification to the NRC.

CODE CASE NO.	*TITLE*
N –307-1	Revised Ultrasonic Examination Volume for Class 1 Bolting, Table IWB-2500-1, Examination Category B-G-1, When the Examinations Are Conducted From the End of the Bolt or Stud or From the Center-Drilled Hole.
N-416-1 (with limitations noted in NRC Regulatory Guide 1.147)	Alternative Pressure Test Requirements for Welded Repairs or Installation of Replacement Items by Welding, Class 1, 2, and 3.
N-460	Alternative Examination Coverage for Class 1 and Class 2 Welds
N-481	Alternative Examination Requirements for Cast Austenitic Pump Casings
N-495	Hydrostatic Testing of Relief Valves
N-498-1 (See Relief Request RR-C1)	Alternative Rules for 10-Year Hydrostatic Pressure Testing for Class 1, 2, and 3 Systems
N-504-1	Alternative Rules for Repair of Class 1, 2, and 3 Austenitic Stainless Steel Piping

CODE CASE NO.	*TITLE*
N-522 (with limitations noted in NRC Regulatory Guide 1.147)	Pressure Testing of Containment Penetration Piping
N-524	Alternative Examination Requirements for Longitudinal Welds in Class 1 and 2 Piping
N-528 (See Relief Request RR-A13)	Purchase, Exchange, or Transfer of Material Between Nuclear Plant Sites
N-537	Location of Ultrasonic Depth-Sizing Flaws
N-566-1 (See Relief Request RR-A10)	Corrective Actions for Leakage Identified at Bolted Connections
N-598 (See Relief Request RR-A11)	Alternative Requirements to Required Percentages of Examination.
N-604 (See Relief Request RR-E5)	Alternative to Bolt Torque or Tension Test Requirements of Table IWE-2500-1, Category E-G, Item E8.20
N-605 (See Relief Request RR-E7)	Alternative to the Requirements of IWE-2500(c) for Augmented Examination of Surface Areas
N-616 (See Relief Request RR-A3)	Alternative Requirements for VT-2 Visual Examination of Classes 1, 2, and 3 Insulated Pressure Retaining Bolted Connections.

CODE CASE NO.	*TITLE*
N-619 (See Relief Request RR-A9)	Alternative Requirements to Nozzle Inner Radius Inspections for Class 1 Pressurizer and Steam Generator Nozzles (Need relief request to use this Code Case)
N-623 (See Relief Request RR-A12)	Deferral of Inspections of Shell-to-Flange and Head-to-Flange Welds of a Reactor Vessel
N-639 (See Relief Request RR-A14)	Alternative Calibration Block Material

2.6.3 NRC Regulatory Guides

The following NRC Regulatory Guides apply.

NUMBER	*TITLE*
1.14	Reactor Coolant Pump Flywheel Integrity - Rev. 1, 8/75 as modified by the Davis-Besse Unit # 1 Technical Specifications
1.26	Quality Group Classifications and Standards for Water-, Steam-, and Radioactive-waste Containing Components of Nuclear Power Plants – Rev. 3, 2/76
1.65	Materials and Inspections for Reactor Vessel Closure Studs (June, 1973)
1.83	Inservice Inspection of Pressurized Water Reactor Steam Generator Tubes – Rev. 1 modified, 7/75
1.147	Inservice Inspection Code Case Acceptability - ASME Section XI, Division 1 (Latest Rev. in effect)

NUMBER	*TITLE*
1.150	Ultrasonic Testing of Reactor Vessel Welds During Preservice and Inservice Inspections - Rev. 1, 2/83

2.6.4 Licensing Commitments

The following USAR commitments apply:

USAR REFERENCE	*APPLICATION*
3.8.2.1.9	Containment Post-Operational Testing and Inspection
5A.5.1.2, 5A.6.2	Reactor Coolant Pump Flywheel
5.2.5	Inservice Inspection Program
6.2.4.2	Containment Penetrations
6.2.4.4	Containment Isolation System -Tests and Inspections
10.4.8.5	Steam Generator Blowdown System

2.6.5 NRC Generic Letters

The following NRC Generic Letters apply:

LETTER NUMBER	*TITLE*
81-01	Qualification of Inspection, Examination, and Testing and Audit Personnel
85-02	Staff Recommended Actions Stemming From NRC Integrated Program for the Resolution of Unresolved Safety Issues Regarding Steam Generator Tube Integrity
87-11	Relaxation in Arbitrary Intermediate Pipe Rupture Requirements (MEB 3-1)
89-09	ASME Section XI Component Replacements
90-05	Guidance for Performing Temporary Non-Code Repair of ASME Code Class 1, 2, and 3 Piping.
97-05	Steam Generator Tube Inspection Techniques

2.6.6 Requests for Relief from Examination

(See Section 8.0 of this document.)

3.0 ASME SYSTEMS & EXAMINATION BOUNDARIES

This section defines those systems designated as ASME Section XI Code Class 1, 2, or 3 and identifies generic inspection requirements for the Third 10-Year Inspection Interval. Several of Davis-Besse's systems or portions of systems are excluded from system and component NDE as allowed by Subarticles IWB-1200, IWC-1200, and IWD-1200. However these systems are not excluded from the pressure testing requirements of the ASME Section XI. When applying the exemptions of IWB-1200, the exemption requirements of the 1989 Edition of Section XI have been applied as required by 10 CFR 50.55a(b)(2)(xi).

Per IWA-1400(a) of the 1995 Edition, 1996 Addenda of Section XI, it is the Owner's responsibility to determine the appropriate Code Classes for each component and to identify the system boundaries subject to inspection. IWA-1400(a), footnote 1, states that classification criteria are specified in 10CFR50.

10 CFR 50.55a(c) provides criteria for the classification of Quality Group A components. Regulatory Guide 1.26, "Quality Group Classifications and Standards for Water, Steam, and Radioactive Waste Containing Components of Nuclear Power Plants", referenced in footnote 9 of 10 CFR 50.55a, provides criteria for the classification of Quality Group B, C, and D components. In general, Quality Group A components are considered ASME Section XI Code Class 1, Quality Group B components are considered ASME Section XI Code Class 2, and Quality Group C components are considered ASME Section XI Code Class 3. Quality Group D components are not included in the Inservice Inspection Program.

The Containment Vessel was designed and Code Stamped as an ASME Section III, Class B, vessel. For the purposes of ISI, it is considered a Class MC component and is inspected under the rules of Subsection IWE.

The ASME Section XI Code Classifications (Class 1, 2, or 3) determine the rules and requirements for inspection and define the Section XI examination boundaries. Because early vintage nuclear plants were designed and constructed before Section III of the ASME Boiler and Pressure Vessel Code was incorporated into 10CFR50.55a, the ASME Section XI Code classifications for ISI may differ from the original design classifications. Therefore, while the ASME Section XI Code classifications determine the rules for repairs and replacements and the component inspection requirements, repairs and replacements are generally performed to meet the specifications of the original design code.

The ASME Section XI Code classification of Davis-Besse Unit #1 systems is summarized in Table 1. The boundaries of these ASME Code class 1, 2, and 3 systems subject to Inservice Inspections are identified on Inservice Inspection Diagram (ISID2) Drawings. A listing of these drawings is contained in Section 8.

TABLE 1
DAVIS-BESSE UNIT #1
ASME CODE CLASS SYSTEMS

SYSTEM (ISID2 #)	SYSTEM DESIGNATOR	ASME CODE CLASS	INSPECTION REQUIREMENTS
Auxiliary Feedwater ISID2-003C ISID2-006D ISID2-007A ISID2-007B	AF	2,3	NDE PRESSURE TESTS
Component Cooling Water ISID2-036A ISID2-036B ISID2-036C ISID2-040D	CC	2, 3	NDE (Class 3 Only) PRESSURE TESTS
Containment Hydrogen Control ISID2-029B ISID2-029C ISID2-029D	CV	2, 3	PRESSURE TESTS
Containment Penetrations ISID2-007A ISID2-010C ISID2-015A ISID2-015D ISID2-019 ISID2-029B ISID2-029E ISID2-030A ISID2-040A ISID2-046	VARIOUS	2	NDE (Portions not exempt per IWC-1222(a) or IWC-1222(c)) PRESSURE TESTS
Containment Spray ISID2-034	CS	2	NDE PRESSURE TESTS

TABLE 1
DAVIS-BESSE UNIT #1
ASME CODE CLASS SYSTEMS

SYSTEM (ISID2 #)	SYSTEM DESIGNATOR	ASME CODE CLASS	INSPECTION REQUIREMENTS
Containment Vessel ISID2-019 ISID2-023	CV	MC	NDE (IWE) PRESSURE TESTS (Appendix J)
Core Flooding ISID2-033B ISID2-034	CF	1, 2	NDE PRESSURE TESTS
Decay Heat and Low Pressure Injection (Including Borated Water) ISID2-030A ISID2-033A ISID2-033B ISID2-033C ISID2-034	DH	1, 2, 3	NDE PRESSURE TESTS
Diesel Oil Storage Tank & Transfer Pumps ISID2-017A	FO	3	NDE PRESSURE TESTS
Emergency Diesel Generators ISID2-017B ISID2-036B	DG	3	NDE PRESSURE TESTS
High Pressure Injection ISID2-030A ISID2-031B ISID2-031C ISID2-033A	HP	1, 2	NDE PRESSURE TESTS

TABLE 1
DAVIS-BESSE UNIT #1
ASME CODE CLASS SYSTEMS

SYSTEM (ISID2 #)	SYSTEM DESIGNATOR	ASME CODE CLASS	INSPECTION REQUIREMENTS
Main Feedwater ISID2-007A ISID2-007B	FW	2	NDE PRESSURE TESTS
Main Steam ISID2-003A ISID2-003C ISID2-007A	MS	2, 3	NDE PRESSURE TESTS
Makeup & Letdown ISID2-030A ISID2-031A ISID2-031B	MU	1, 2	NDE (Class 1 Only) PRESSURE TESTS
Reactor Coolant ISID2-030A	RC	1	NDE PRESSURE TESTS
Service Water Pumps & Piping ISID2-006D ISID2-041A ISID2-041B ISID2-041C	SW	2, 3	NDE PRESSURE TESTS
Spent Fuel Cooling ISID2-033A ISID2-033B ISID2-033C ISID2-035	SF	2, 3	PRESSURE TESTS
Steam Generators ISID2-007A	SG	1, 2	NDE PRESSURE TESTS

4.0 ASME SECTION XI APPLICATION CRITERIA AND CODE COMPLIANCE

4.1 ASME Class 1

The following provides a summary of the application of the ASME Section XI, 1995 Edition through the 1996 Addenda to ASME Class 1 components. The application and distribution of examinations for this interval is based upon Program B as defined by paragraph IWB-2412.

The schedule for the examination of ASME Class 1 components is contained within Table 2.

4.1.1 CATEGORY B-A - PRESSURE RETAINING WELDS IN REACTOR VESSEL

The Reactor Vessel shell, lower head welds and the shell to flange weld will be examined near the end of the inspection interval. Relief Request RR-A12 requests permission to defer the examination of the shell to flange weld to the third period. One third (1/3) of the head to flange weld will be examined each period.

4.1.2 CATEGORY B-B - PRESSURE RETAINING WELDS IN VESSELS OTHER THAN REACTOR VESSELS

Examination Category B-B requires the pressurizer and primary side of steam generators be examined during the inspection interval. Note 1 states that the examinations may be limited to one of a group of vessels with similar function.

STEAM GENERATORS

There are three Category B-B, welds on each steam generator, one lower head circumferential weld and two tubesheet to head welds. These welds on one steam generator will be examined.

PRESSURIZER

Examination Category B-B requires examination of both shell to head welds and one foot of one intersecting longitudinal weld per head. The Pressurizer has 2 shell to head welds and three longitudinal shell to head welds, one to the upper head and two to the lower head. Both shell to head welds will be examined. One foot of the longitudinal weld to upper head and one foot of one of the longitudinal weld to lower head will be examined at the intersection with the circumferential weld.

4.1.3 CATEGORY B-D - FULL PENETRATION WELDED NOZZLES IN VESSELS

Examination Category B-D requires that all vessel nozzles and the nozzle inside radius sections be examined. The Reactor Vessel, Pressurizer, and primary side of the Steam Generators contain nozzles that require examination.

REACTOR VESSEL

The Reactor Vessel contains 8 nozzles, which will be examined from the inside surface at the end of the interval. Deferral of these examinations to the end of the interval is permitted by Note 5 to Examination Category B-D.

PRESSURIZER

The Pressurizer contains 6 nozzles. One nozzle is the manway and is exempt from examination per Note 1 of Examination Category B-D. The remaining 5 nozzles will be examined during the interval. The Inside Radius examinations required by Code Item B3.120 will not be performed as Code Case N-619 states that the Inside Radius examinations required by Code Item B3.120 are not required to be performed. (See Relief Request RR-A9)

STEAM GENERATORS

Each Steam Generator contains 3 nozzles, one inlet and two outlet. The nozzles for both steam generators will be examined during the interval. The Inside Radius examinations required by Code Item B3.140 will not

be performed as Code Case N-619 states that the Inside Radius examinations required by Code Item B3.140 are not required to be performed. (See Relief Request RR-A9)

4.1.4 CATEGORY B-F - PRESSURE RETAINING DISSIMILAR METAL WELDS IN VESSEL NOZZLES

All Reactor Vessel and Pressurizer Nozzle to Safe-end welds will be examined during the inspection interval. The Steam Generators have no dissimilar nozzle to safe end welds. Code Item B5.10, Reactor Vessel NPS 4 or Larger Nozzle-to-Safe End Butt Welds, requires both a volumetric and surface examination of the weld. The two Reactor Vessel Nozzle to Core Flood Piping Safe End Welds in Code Item B5.10 are not readily accessible for examination from the outside surface. Therefore, these welds will only receive a volumetric examination. (See Relief Request RR-A1).

4.1.5 CATEGORY B-G-1 - PRESSURE RETAINING BOLTING, GREATER THAN 2" IN DIAMETER

Only the Reactor Vessel, the Pressurizer Manway, and Reactor Coolant Pumps Casings contain bolting greater than 2" inches in diameter. All Reactor Vessel and Pressurizer bolting greater than 2 inches in diameter will examined during the interval. Examination Category B-G-1 Note 3 limits the examinations to components selected under Examination Categories B-B, B-J, B-L-2, and B-M-2. Examination Category B-L-2 Note 1 limits the examination to at least one pump in each group of pumps performing similar functions. Therefore, only the bolting on one Reactor Coolant Pump Casing will be examined. The Pressurizer and Reactor Coolant Pump flange surfaces will be examined only if the connection is disassembled.

4.1.6 CATEGORY B-G-2 - PRESSURE RETAINING BOLTING 2" AND LESS IN DIAMETER

Pressurizer Heater bolting, Steam Generator Manway and Hand Hole bolting, Flange bolting in the Reactor Coolant System piping, and valve bolting in the Core Flood, Decay Heat, and Reactor Coolant systems will be examined during the interval.

Steam Generator Manway and Hand Hole bolting examinations are limited to bolting in one steam generator as Note 2 limits examinations to components selected for examination under Examination Category B-B. Examination Category B-B Note 1 permits examination be limited to one vessel among the group of vessels performing a similar function.

Examination Category B-G-2 Note 2 also limits valve bolting examination to components selected for examination under Code Categories B-M-2. Code Category B-M-2 requires examination of valves exceeding NPS 4 and Note 3 limits examination to one valve in each group of same size, constructional design, manufacturing method, and that perform similar functions in the system.

4.1.7 CATEGORY B-J - PRESSURE RETAINING WELDS IN PIPING

10 CFR 50.55a(b)(2)(ii) states that if a plant application for construction permit was docketed prior to July 1, 1978, the extent of examination for Class 1 piping welds may be determined by the requirements of Table IWB-2500 and Table IWB-2600, Category B-J from the 1974 Edition with the Summer 1975 Addenda of Section XI. The 1974 Edition of the ASME Code, Table IWB-2500-1, for Category B-J welds, states that "The examinations performed during each inspection interval shall cover all of the area of 25% of the circumferential joints including the adjoining 1 ft sections of longitudinal joints and 25% of the pipe branch connection joints".

The requirements of the ASME Code, 1995 Edition, 1996 Addenda will be used for the examination of Category B-J welds, except that the ASME Code, 1974 Edition, Summer 75 Addenda, will be used in lieu of the requirements of Note 1 of Examination Category B-J in the 1995 Edition, 1996 Addenda. The weld selection criteria will include all dissimilar metal welds as well as additional circumferential piping welds to equal 25% of the total number of circumferential piping welds. Longitudinal welds are examined as described in Code Case N-524.

Branch connection welds Nominal Pipe Size (NPS) 4" or larger require a volumetric and surface examination. Only the Surge Line and the Decay Heat Line connections are NPS 4" or larger. The remaining branch connections have an inlet less than NPS 4". However, should these branch connections fail, a breach in the piping would be greater than NPS 4. Therefore, a volumetric and surface examination of 25%

of the total number of branch connection welds will be examined. The volumetric examination of the branch connections with an inlet less than NPS 4" will be augmented.

The Reactor Vessel to Pipe welds are not readily accessible from the outside surface of the piping. Therefore, the required surface examination will not be performed. An alternative ultrasonic examination technique, which examines the outside surface area from the inside of the pipe, will be used to examine these welds. (See Relief Request RR-A1).

10 CFR 50.55a(g)(4)(iii) states that licensees may, but are not required to, perform the surface examinations of the High Pressure Safety Injection Systems specified in Table IWB-2500-1, Examination Category B-J, Item Numbers B9.20, B9.21, and B9.22. In lieu of the requirements of Item Numbers B9.20 and B9.21, 25% of the High Pressure Injection circumferential welds will receive an augmented volumetric and surface examination. This will include the dissimilar metal welds in the High Pressure Injection System.

4.1.8 CATEGORY B-K - WELDED ATTACHMENTS FOR VESSELS, PIPING, PUMPS, AND VALVES

Examination Category B-K Note 4 states that, for multiple vessels of similar design, function, and service only one welded attachment of only one of the multiple vessels shall be selected for examination.

REACTOR VESSEL

The Reactor Vessel has no welded attachments with the exception of the lifting lugs on the Reactor Vessel Closure Head. As these lifting lugs do not provide any component support, they do not require examination per Note 1 of this examination category.

STEAM GENERATORS

Each Steam Generator has a transition ring to support skirt weld. This weld on one Steam Generator will be examined during the inspection interval.

PRESSURIZER

The Pressurizer has one integral attachment with 8 lugs welded to the Pressurizer Shell. One of these lugs will be examined during the inspection interval. The Pressurizer also has lifting lugs attached to the Pressurizer Head. As these lifting lugs do not provide any component support, they do not require examination per Note 1 of this examination category.

PIPING, PUMPS, and VALVES

Examination Category B-K Note 5 states that for piping, pumps, and valves, a sample 10% of the welded attachments associated with the component supports selected for examination under IWF-2510 shall be examined. Ten percent (10%) of the total number of Class 1 piping attachment welds will be examined during the inspection interval. There are no Class 1 pump or valve welded attachments.

4.1.9 CATEGORY B-L-1 AND B-L-2 - PRESSURE RETAINING WELDS IN PUMP CASINGS, AND PUMP CASINGS

The Reactor Coolant Pumps are the only Code Class 1 pumps installed at Davis-Besse. Examination Category B-L-1 requires volumetric examination on pump casing welds. Code Case N-481 will be used in lieu of the examination requirements of this Code Category.

Examination Category B-L-2 requires examination of the internal surfaces of the pump casing. As permitted by Note 2, this examination will only be performed if a Reactor Coolant Pump is disassembled for maintenance, repair, or volumetric examination.

4.1.10 CATEGORY B-M-1 AND B-M-2 - PRESSURE RETAINING WELDS IN VALVE BODIES, AND VALVE BODIES

There are no Examination Category B-M-1 welds in valves installed at Davis-Besse.

There are a total of ten valves that fall into Examination Category B-M-2. Valves DH11/DH12, DH21/DH23, CF30/CF31/CF28/CF29 and DH76/DH77 are considered groups of valves as defined by Note 3 of examination Category B-M-1/B-M-2. One valve per grouping of

valves will be examined over the interval when disassembled for routine maintenance, repair, or volumetric examination.

4.1.11 CATEGORY B-N-1 - INTERIOR OF REACTOR VESSEL

The interior surface of the Reactor Vessel will be examined each inspection period.

4.1.12 CATEGORY B-N-2 - WELDED CORE SUPPORT STRUCTURES AND INTERIOR ATTACHMENTS TO REACTOR VESSELS

These examinations will be conducted during the third period to coincide with the 10-year inspection of the reactor vessel.

4.1.13 CATEGORY B-N-3 - REMOVABLE CORE SUPPORT STRUCTURES

These examinations will be conducted during the third period to coincide with the 10-year inspection of the reactor vessel.

4.1.14 CATEGORY B-O - PRESSURE RETAINING WELDS IN CONTROL ROD HOUSINGS

Examination Category B-O requires volumetric or surface examination of 10 % of peripheral control rod drive (CRDM) housings during the inspection interval. Ten percent (10%) of CRDM housings equates to 3 CRDM's. Each CRDM has 4 welds. Three CRDM's will be examined during the inspection interval as the welds are made accessible by disassembly of the CRDM's, and may not be the same as those examined during previous inspection intervals.

4.1.15 CATEGORY B-P - ALL PRESSURE TESTING COMPONENTS

Section 5 describes the Pressure Test Program.

4.1.16 CATEGORY B-Q - STEAM GENERATOR TUBING

Steam Generator Tubing will be examined as required by the Davis-Besse Unit #1 Technical Specifications. The examinations will be conducted in accordance with the provisions of Appendix IV and Section V, Article 8, Appendix II of the 1995 Edition, 1996 Addenda of ASME Section XI and will meet NEI-97-06, Steam Generator Program Guidelines, requirements.

The bases for Technical Specifications 4.4.5 require sleeved tube examinations be compared to baseline sleeve examination data.

4.1.17 CATEGORY F-A - SUPPORTS

For multiple components of similar design, function, and service, the supports of only one of the multiple components will be examined. The supports on the Reactor Vessel, Pressurizer, one Steam Generator, and one Reactor Coolant Pump will be examined.

Twenty-five percent (25%) of Class 1 piping supports not exempted by IWF-1230 will be examined during the inspection interval. The sample size will be proportional to the total number of non-exempt supports of each type and function within each system.

The examination and testing of snubbers (pin to pin only) will be performed in accordance with Section 7.

CODE CLASS 1 EXAMINATION SCHEDULE
Table 2

Code Class: 1
System: CORE FLOODING SYSTEM
Code Category: B-G-2

Code Item	ASME Item Description	Quantity of Total Components	Components Selected	%	Examinations Required		1 # Exams	1 % Schd	2 # Exams	2 % Schd	3 # Exams	3 % Schd
B07.070	VALVES-BOLTS, STUDS, AND NUTS	4	1	25	**VOL**	**0**	0	0	0	0	0	0
					SUR	**0**	0	0	0	0	0	0
					VIS	**1**	0	0	0	0	1	100
					TOTAL	**1**	**0**	**0**	**0**	**0**	**1**	**100**
	Total for Category B-G-2	4	1	25	**TOTAL**	1	0	0	0	0	1	100

Note:
1. Examination is limited to components selected under Code Category B-M-2.

CODE CLASS 1 EXAMINATION SCHEDULE
Table 2

Code Class: 1
System: CORE FLOODING SYSTEM
Code Category: B-J

Code Item	ASME Item Description	Quantity of Total Components	Components Selected	%	Examinations Required		1 # Exams	1 % Schd	2 # Exams	2 % Schd	3 # Exams	3 % Schd
B09.011	CIRCUMFERENTIAL PIPE WELDS >= 4 IN. NOMINAL PIPE SIZE	25	7	28	**VOL**	**7**	3	43	1	14	3	43
					SUR	**7**	3	43	1	14	3	43
					VIS	**0**	0	0	0	0	0	0
					TOTAL	**14**	**6**	**43**	**2**	**14**	**6**	**43**
	Total for Category B-J	25	7	28	**TOTAL**	14	6	43	2	14	6	43

Note:
1. Welds are selected for examination utilizing ASME Section XI, 1974 Edition, Summer 1975 Addenda.

CODE CLASS 1 EXAMINATION SCHEDULE
Table 2

Code Class: 1
System: CORE FLOODING SYSTEM
Code Category: B-K

Code Item	ASME Item Description	Quantity of Total Components	Components Selected	%	Examinations Required		1 # Exams	1 % Schd	2 # Exams	2 % Schd	3 # Exams	3 % Schd
B10.020	PIPING-WELDED ATTACHMENTS	5	1	20	**VOL**	**0**	0	0	0	0	0	0
					SUR	**1**	0	0	0	0	1	100
					VIS	**0**	0	0	0	0	0	0
					TOTAL	**1**	**0**	**0**	**0**	**0**	**1**	**100**
	Total for Category B-K	5	1	20	**TOTAL**	1	0	0	0	0	1	100

CODE CLASS 1 EXAMINATION SCHEDULE
Table 2

Code Class: 1
System: CORE FLOODING SYSTEM
Code Category: B-M-2

Code Item	ASME Item Description	Quantity of Total Components	Components Selected	%	Examinations Required		1 # Exams	1 % Schd	2 # Exams	2 % Schd	3 # Exams	3 % Schd
B12.050	VALVES-VALVE BODIES EXCEEDING 4 INCHES NOMINAL PIPE SIZE	4	0	0	**VOL**	**0**	0	0	0	0	0	0
					SUR	**0**	0	0	0	0	0	0
					VIS	**0**	0	0	0	0	0	0
					TOTAL	**0**	**0**	**0**	**0**	**0**	**0**	**0**
	Total for Category B-M-2	4	0	0	**TOTAL**	0	0	0	0	0	0	0

Note:
1. The valve body internal surfaces will be examined only if the valve is disassembled for maintenance.

CODE CLASS 1 EXAMINATION SCHEDULE
Table 2

Code Class: 1
System: CORE FLOODING SYSTEM
Code Category: F-A

Code Item	ASME Item Description	Quantity of Total Components	Components Selected	%	Examinations Required		1 # Exams	1 % Schd	2 # Exams	2 % Schd	3 # Exams	3 % Schd
F01.010	CLASS 1 PIPING SUPPORTS	7	2	29	VOL	0	0	0	0	0	0	0
					SUR	0	0	0	0	0	0	0
					VIS	2	0	0	0	0	2	100
					TOTAL	2	0	0	0	0	2	100
	Total for Category F-A	7	2	29	TOTAL	2	0	0	0	0	2	100
Total for System	**CORE FLOODING SYSTEM**	45	11	24	TOTAL	18	6	33	2	11	10	56

CODE CLASS 1 EXAMINATION SCHEDULE
Table 2

Code Class: 1
System: DECAY HEAT & LOW PRESSURE INJECTION
Code Category: B-G-2

Code Item	ASME Item Description	Quantity of Total Components	Components Selected	%	Examinations Required		1 # Exams	1 % Schd	2 # Exams	2 % Schd	3 # Exams	3 % Schd
B07.070	VALVES-BOLTS, STUDS, AND NUTS	8	3	38	**VOL**	**0**	0	0	0	0	0	0
					SUR	**0**	0	0	0	0	0	0
					VIS	**3**	2	67	0	0	1	33
					TOTAL	**3**	**2**	**67**	**0**	**0**	**1**	**33**
	Total for Category B-G-2	8	3	38	**TOTAL**	3	2	67	0	0	1	33

1. Examination is limited to components selected under Code Category B-M-2.

CODE CLASS 1 EXAMINATION SCHEDULE
Table 2

Code Class: 1
System: DECAY HEAT & LOW PRESSURE INJECTION
Code Category: B-J

Code Item	ASME Item Description	Quantity of Total Components	Components Selected	%	Examinations Required		1 # Exams	1 % Schd	2 # Exams	2 % Schd	3 # Exams	3 % Schd
B09.011	CIRCUMFERENTIAL PIPE WELDS >= 4 IN. NOMINAL PIPE SIZE	26	7	27	VOL	7	2	29	1	14	4	57
					SUR	7	2	29	1	14	4	57
					VIS	0	0	0	0	0	0	0
					TOTAL	14	4	29	2	14	8	57
	Total for Category B-J	26	7	27	TOTAL	14	4	29	2	14	8	57

Note:
1. Welds are selected for examination utilizing ASME Section XI, 1974 Edition, Summer 1975 Addenda.

CODE CLASS 1 EXAMINATION SCHEDULE
Table 2

Code Class: 1
System: DECAY HEAT & LOW PRESSURE INJECTION
Code Category: B-K

Code Item	ASME Item Description	Quantity of Total Components	Components Selected	%	Examinations Required		1 # Exams	1 % Schd	2 # Exams	2 % Schd	3 # Exams	3 % Schd
B10.020	PIPING-WELDED ATTACHMENTS	5	1	20	VOL	0	0	0	0	0	0	0
					SUR	1	1	100	0	0	0	0
					VIS	0	0	0	0	0	0	0
					TOTAL	1	1	100	0	0	0	0
	Total for Category B-K	5	1	20	TOTAL	1	1	100	0	0	0	0

CODE CLASS 1 EXAMINATION SCHEDULE
Table 2

Code Class: 1
System: DECAY HEAT & LOW PRESSURE INJECTION
Code Category: B-M-2

Code Item	ASME Item Description	Quantity of Total Components	Components Selected	%	Examinations Required		1 # Exams	1 % Schd	2 # Exams	2 % Schd	3 # Exams	3 % Schd
B12.050	VALVES-VALVE BODIES EXCEEDING 4 INCHES NOMINAL PIPE SIZE	6	0	0	VOL	0	0	0	0	0	0	0
					SUR	0	0	0	0	0	0	0
					VIS	0	0	0	0	0	0	0
					TOTAL	0	0	0	0	0	0	0
	Total for Category B-M-2	6	0	0	TOTAL	0	0	0	0	0	0	0

Note:
1. The valve body internal surfaces will be examined only if the valve is disassembled for maintenance.

CODE CLASS 1 EXAMINATION SCHEDULE
Table 2

Code Class: 1
System: DECAY HEAT & LOW PRESSURE INJECTION
Code Category: F-A

Code Item	ASME Item Description	Quantity of Total Components	Components Selected	%	Examinations Required		1 # Exams	1 % Schd	2 # Exams	2 % Schd	3 # Exams	3 % Schd
F01.010	CLASS 1 PIPING SUPPORTS	10	3	30	VOL	0	0	0	0	0	0	0
					SUR	0	0	0	0	0	0	0
					VIS	3	1	33	1	33	1	33
					TOTAL	3	1	33	1	33	1	33
	Total for Category F-A	10	3	30	TOTAL	3	1	33	1	33	1	33
Total for System	**DECAY HEAT & LOW PRESSURE INJECTION**	55	14	25	TOTAL	21	8	38	3	14	10	48

CODE CLASS 1 EXAMINATION SCHEDULE
Table 2

Code Class: 1
System: HIGH PRESSURE INJECTION - EMERGENCY CORE
Code Category: B-G-2

Code Item	ASME Item Description	Quantity of Total Components	Components Selected	%	Examinations Required		1 # Exams	1 % Schd	2 # Exams	2 % Schd	3 # Exams	3 % Schd
B07.070	VALVES-BOLTS, STUDS, AND NUTS	8	0	0	VOL	0	0	0	0	0	0	0
					SUR	0	0	0	0	0	0	0
					VIS	0	0	0	0	0	0	0
					TOTAL	0	0	0	0	0	0	0
	Total for Category B-G-2	8	0	0	TOTAL	0	0	0	0	0	0	0

Note:
1. No components are selected for examination as none of the valves require examination under Code Category B-M-2.

CODE CLASS 1 EXAMINATION SCHEDULE
Table 2

Code Class: 1
System: HIGH PRESSURE INJECTION - EMERGENCY CORE
Code Category: B-J

Code Item	ASME Item Description	Quantity of Total Components	Components Selected	%	Examinations Required		1 # Exams	1 % Schd	2 # Exams	2 % Schd	3 # Exams	3 % Schd
B09.021	CIRCUMFERENTIAL PIPE WELDS < 4 IN. NOMINAL PIPE SIZE	16	4	25	**VOL**	**4**	1	25	2	50	1	25
					SUR	**4**	1	25	2	50	1	25
					VIS	**0**	0	0	0	0	0	0
					TOTAL	**8**	**2**	**25**	**4**	**50**	**2**	**25**
	Total for Category B-J	16	4	25	**TOTAL**	8	2	25	4	50	2	25
Total for System	**HIGH PRESSURE INJECTION - EMERGENCY CORE COOLING**	24	4	17	**TOTAL**	8	2	25	4	50	2	25

Note:
1. Welds are selected for examination utilizing ASME Section XI, 1974 Edition, Summer 1975 Addenda.
2. An augmented volumetric and surface examination will be performed on the High Pressure Injection welds.

CODE CLASS 1 EXAMINATION SCHEDULE
Table 2

Code Class: 1
System: MAKEUP & PURIFICATION
Code Category: B-G-2

Code Item	ASME Item Description	Quantity of Total Components	Components Selected	%	Examinations Required		1 # Exams	1 % Schd	2 # Exams	2 % Schd	3 # Exams	3 % Schd
B07.070	VALVES-BOLTS, STUDS, AND NUTS	3	0	0	VOL	0	0	0	0	0	0	0
					SUR	0	0	0	0	0	0	0
					VIS	0	0	0	0	0	0	0
					TOTAL	0	0	0	0	0	0	0
	Total for Category B-G-2	3	0	0	TOTAL	0	0	0	0	0	0	0

Note:
1. No components are selected for examination as none of the valves require examination under Code Category B-M-2.

CODE CLASS 1 EXAMINATION SCHEDULE
Table 2

Code Class: 1
System: MAKEUP & PURIFICATION
Code Category: B-J

Code Item	ASME Item Description	Quantity of Total Components	Components Selected	%	Examinations Required		1 # Exams	1 % Schd	2 # Exams	2 % Schd	3 # Exams	3 % Schd
B09.021	CIRCUMFERENTIAL PIPE WELDS < 4 IN. NOMINAL PIPE SIZE	36	9	25	**VOL**	**0**	0	0	0	0	0	0
					SUR	**9**	4	44	2	22	3	33
					VIS	**0**	0	0	0	0	0	0
					TOTAL	**9**	**4**	**44**	**2**	**22**	**3**	**33**
	Total for Category B-J	36	9	25	**TOTAL**	9	4	44	2	22	3	33

Note:
1. Welds are selected for examination utilizing ASME Section XI, 1974 Edition, Summer 1975 Addenda.

CODE CLASS 1 EXAMINATION SCHEDULE
Table 2

Code Class: 1
System: MAKEUP & PURIFICATION
Code Category: B-K

Code Item	ASME Item Description	Quantity of Total Components	Components Selected	%	Examinations Required		1 # Exams	1 % Schd	2 # Exams	2 % Schd	3 # Exams	3 % Schd
B10.020	PIPING-WELDED ATTACHMENTS	3	0	0	VOL	0	0	0	0	0	0	0
					SUR	0	0	0	0	0	0	0
					VIS	0	0	0	0	0	0	0
					TOTAL	0	0	0	0	0	0	0
	Total for Category B-K	3	0	0	TOTAL	0	0	0	0	0	0	0

CODE CLASS 1 EXAMINATION SCHEDULE
Table 2

Code Class: 1
System: MAKEUP & PURIFICATION
Code Category: F-A

Code Item	ASME Item Description	Quantity of Total Components	Components Selected	%	Examinations Required		1 # Exams	1 % Schd	2 # Exams	2 % Schd	3 # Exams	3 % Schd
F01.010	CLASS 1 PIPING SUPPORTS	11	3	27	VOL	0	0	0	0	0	0	0
					SUR	0	0	0	0	0	0	0
					VIS	3	2	67	0	0	1	33
					TOTAL	3	2	67	0	0	1	33
	Total for Category F-A	11	3	27	TOTAL	3	2	67	0	0	1	33
Total for System	**MAKEUP & PURIFICATION**	53	12	23	TOTAL	12	6	50	2	17	4	33

CODE CLASS 1 EXAMINATION SCHEDULE
Table 2

Code Class: 1
System: REACTOR COOLANT SYSTEM
Code Category: B-A

Code Item	ASME Item Description	Quantity of Total Components	Components Selected	%	Examinations Required		1 # Exams	1 % Schd	2 # Exams	2 % Schd	3 # Exams	3 % Schd
B01.011	CIRCUMFERENTIAL SHELL WELDS	3	3	100	VOL	3	0	0	0	0	3	100
					SUR	0	0	0	0	0	0	0
					VIS	0	0	0	0	0	0	0
					TOTAL	3	0	0	0	0	3	100
Note: 1. The examinations are deferred to the end of the interval.												
B01.021	CIRCUMFERENTIAL HEAD WELDS	1	1	100	VOL	1	0	0	0	0	1	100
					SUR	0	0	0	0	0	0	0
					VIS	0	0	0	0	0	0	0
					TOTAL	1	0	0	0	0	1	100
Note: 1. The examinations are deferred to the end of the interval.												
B01.030	SHELL-TO-FLANGE WELD	1	1	100	VOL	1	0	0	0	0	1	100
					SUR	0	0	0	0	0	0	0
					VIS	0	0	0	0	0	0	0
					TOTAL	1	0	0	0	0	1	100
Note: 1. Relief Request RR-A12 is applicable.												
B01.040	HEAD-TO-FLANGE WELD	1	1	100	VOL	3	1	33	1	33	1	33
					SUR	3	1	33	1	33	1	33
					VIS	0	0	0	0	0	0	0
					TOTAL	6	2	33	2	33	2	33
Note: 1. On third (1/3) of the head-to-flange weld will be examined each period.												
	Total for Category B-A	6	6	100	TOTAL	11	2	18	2	18	7	64

CODE CLASS 1 EXAMINATION SCHEDULE
Table 2

Code Class: 1
System: REACTOR COOLANT SYSTEM
Code Category: B-B

Code Item	ASME Item Description	Quantity of Total Components	Components Selected	%	Examinations Required		1 # Exams	1 % Schd	2 # Exams	2 % Schd	3 # Exams	3 % Schd
B02.011	PRESSURIZER-CIRCUMFERENTIAL SHELL-TO-HEAD WELDS	2	2	100	VOL	2	0	0	1	50	1	50
					SUR	0	0	0	0	0	0	0
					VIS	0	0	0	0	0	0	0
					TOTAL	2	0	0	1	50	1	50
B02.012	PRESSURIZER-LONGITUDINAL SHELL-TO-HEAD WELDS	3	2	67	VOL	2	0	0	1	50	1	50
					SUR	0	0	0	0	0	0	0
					VIS	0	0	0	0	0	0	0
					TOTAL	2	0	0	1	50	1	50
B02.031	STEAM GENERATORS (PRIMARY SIDE)-CIRCUMFERENTIAL HEAD WELDS	2	1	50	VOL	1	1	100	0	0	0	0
					SUR	0	0	0	0	0	0	0
					VIS	0	0	0	0	0	0	0
					TOTAL	1	1	100	0	0	0	0
B02.040	STEAM GENERATORS (PRIMARY SIDE)-TUBESHEET-TO-HEAD WELD	4	2	50	VOL	2	1	50	0	0	1	50
					SUR	0	0	0	0	0	0	0
					VIS	0	0	0	0	0	0	0
					TOTAL	2	1	50	0	0	1	50
	Total for Category B-B	11	7	64	TOTAL	7	2	29	2	29	3	43

Note:
1. Examination is limited to one longitudinal weld per head.

Note:
1. The selection criteria is based on two steam generators.

Note:
1. The selection criterial is based on two steam generators.

CODE CLASS 1 EXAMINATION SCHEDULE
Table 2

Code Class: 1
System: REACTOR COOLANT SYSTEM
Code Category: B-D

Code Item	ASME Item Description	Quantity of Total Components	Components Selected	%	Examinations Required		1 # Exams	1 % Schd	2 # Exams	2 % Schd	3 # Exams	3 % Schd
B03.090	REACTOR VESSEL-NOZZLE-TO-VESSEL WELDS	8	8	100	VOL	8	0	0	0	0	8	100
					SUR	0	0	0	0	0	0	0
					VIS	0	0	0	0	0	0	0
					TOTAL	8	0	0	0	0	8	100
B03.100	REACTOR VESSEL-NOZZLE INSIDE RADIUS SECTION	8	8	100	VOL	8	0	0	0	0	8	100
					SUR	0	0	0	0	0	0	0
					VIS	0	0	0	0	0	0	0
					TOTAL	8	0	0	0	0	8	100
B03.110	PRESSURIZER-NOZZLE-TO-VESSEL WELDS	6	5	83	VOL	5	2	40	1	20	2	40
					SUR	0	0	0	0	0	0	0
					VIS	0	0	0	0	0	0	0
					TOTAL	5	2	40	1	20	2	40
B03.120	PRESSURIZER-NOZZLE INSIDE RADIUS SECTION	6	5	83	VOL	5	2	40	1	20	2	40
					SUR	0	0	0	0	0	0	0
					VIS	0	0	0	0	0	0	0
					TOTAL	5	2	40	1	20	2	40

Note:
1. The examinations are deferred to the end of the interval.

Note:
1. The examinations are deferred to the end of the interval.

Note:
1. The Pressurizer manway is excluded from examination.

Note:
1. Inside Radius examinations are not required per Code Case N-619. See Relief Request RR-A9.

CODE CLASS 1 EXAMINATION SCHEDULE
Table 2

Code Class: 1
System: REACTOR COOLANT SYSTEM
Code Category: B-D

Code Item	ASME Item Description	Quantity of Total Components	Components Selected	%	Examinations Required		1 # Exams	1 % Schd	2 # Exams	2 % Schd	3 # Exams	3 % Schd
B03.130	STEAM GENERATORS (PRIMARY SIDE)-NOZZLE-TO-VESSEL WELDS	6	6	100	**VOL**	**6**	3	50	1	17	2	33
					SUR	**0**	0	0	0	0	0	0
					VIS	**0**	0	0	0	0	0	0
					TOTAL	**6**	**3**	**50**	**1**	**17**	**2**	**33**
B03.140	STEAM GENERATORS (PRIMARY SIDE)-NOZZLE INSIDE RADIUS SECTION	6	6	100	**VOL**	**6**	3	50	1	17	2	33
					SUR	**0**	0	0	0	0	0	0
					VIS	**0**	0	0	0	0	0	0
					TOTAL	**6**	**3**	**50**	**1**	**17**	**2**	**33**
	Total for Category B-D	40	38	95	**TOTAL**	38	10	26	4	11	24	63

Note:
1. Inside Radius examinations are not required per Code Case N-619. See Relief Request RR-A9.

CODE CLASS 1 EXAMINATION SCHEDULE
Table 2

Code Class: 1
System: REACTOR COOLANT SYSTEM
Code Category: B-F

Code Item	ASME Item Description	Quantity of Total Components	Components Selected	%	Examinations Required		1 # Exams	1 % Schd	2 # Exams	2 % Schd	3 # Exams	3 % Schd
B05.010	REACTOR VESSEL-NOZZLE-TO-SAFE END BUTT WELDS >= 4 INCHES NOMINAL PIPE SIZE	2	2	100	VOL	2	0	0	0	0	2	100
					SUR	0	0	0	0	0	0	0
					VIS	0	0	0	0	0	0	0
					TOTAL	2	0	0	0	0	2	100
B05.040	PRESSURIZER-NOZZLE-TO-SAFE END BUTT WELDS >= 4 INCHES NOMINAL PIPE SIZE	2	2	100	VOL	2	1	50	0	0	1	50
					SUR	2	1	50	0	0	1	50
					VIS	0	0	0	0	0	0	0
					TOTAL	4	2	50	0	0	2	50
B05.050	PRESSURIZER-NOZZLE-TO-SAFE END BUTT WELDS < 4 INCHES NOMINAL PIPE SIZE	3	3	100	VOL	0	0	0	0	0	0	0
					SUR	3	1	33	1	33	1	33
					VIS	0	0	0	0	0	0	0
					TOTAL	3	1	33	1	33	1	33
	Total for Category B-F	7	7	100	TOTAL	9	3	33	1	11	5	56

Note:
1. The safe end welds are not accessible from the outside surface. Therefore, no surface examination will be performed. See Relief Request RR-A1.

CODE CLASS 1 EXAMINATION SCHEDULE
Table 2

Code Class: 1
System: REACTOR COOLANT SYSTEM
Code Category: B-G-1

Code Item	ASME Item Description	Quantity of Total Components	Components Selected	%	Examinations Required		1 # Exams	1 % Schd	2 # Exams	2 % Schd	3 # Exams	3 % Schd
B06.010	REACTOR VESSEL-CLOSURE HEAD NUTS	60	60	100	VOL	0	0	0	0	0	0	0
					SUR	0	0	0	0	0	0	0
					VIS	60	24	40	12	20	24	40
					TOTAL	60	24	40	12	20	24	40
B06.030	REACTOR VESSEL-CLOSURE STUDS, WHEN REMOVED	60	60	100	VOL	60	24	40	12	20	24	40
					SUR	60	24	40	12	20	24	40
					VIS	0	0	0	0	0	0	0
					TOTAL	120	48	40	24	20	48	40
B06.040	REACTOR VESSEL-THREADS IN FLANGE	1	1	100	VOL	2	1	50	0	0	1	50
					SUR	0	0	0	0	0	0	0
					VIS	0	0	0	0	0	0	0
					TOTAL	2	1	50	0	0	1	50
B06.050	REACTOR VESSEL-CLOSURE WASHERS, BUSHINGS	62	62	100	VOL	0	0	0	0	0	0	0
					SUR	0	0	0	0	0	0	0
					VIS	62	26	42	12	19	24	39
					TOTAL	62	26	42	12	19	24	39

Note:
1. The B06.020 examinations may be performed in lieu of the B06.030 examinations if the reactor vessels studs are not removed.

Note:
1. 50% of the Threads in the Flange will be examined during the first period. The remainder will be examined in the third period.

CODE CLASS 1 EXAMINATION SCHEDULE
Table 2

Code Class: 1
System: REACTOR COOLANT SYSTEM
Code Category: B-G-1

Code Item	ASME Item Description	Quantity of Total Components	Components Selected	%	Examinations Required		1 # Exams	1 % Schd	2 # Exams	2 % Schd	3 # Exams	3 % Schd
B06.060	PRESSURIZER-BOLTS AND STUDS	12	12	100	VOL	12	4	33	4	33	4	33
					SUR	0	0	0	0	0	0	0
					VIS	0	0	0	0	0	0	0
					TOTAL	12	4	33	4	33	4	33
B06.070	PRESSURIZER-FLANGE SURFACE, WHEN CONNECTION DISASSEMBLED	1	0	0	VOL	0	0	0	0	0	0	0
					SUR	0	0	0	0	0	0	0
					VIS	0	0	0	0	0	0	0
					TOTAL	0	0	0	0	0	0	0
B06.080	PRESSURIZER-NUTS, BUSHINGS, AND WASHERS	12	12	100	VOL	0	0	0	0	0	0	0
					SUR	0	0	0	0	0	0	0
					VIS	12	4	33	4	33	4	33
					TOTAL	12	4	33	4	33	4	33
B06.180	PUMPS-BOLTS AND STUDS	64	16	25	VOL	16	8	50	0	0	8	50
					SUR	0	0	0	0	0	0	0
					VIS	0	0	0	0	0	0	0
					TOTAL	16	8	50	0	0	8	50

Note:
1. The flange surface examination will be performed only if the surface is exposed as a result of maintenance.

Note:
1. Examination is limited to one Reactor Coolant Puump.

CODE CLASS 1 EXAMINATION SCHEDULE
Table 2

Code Class: 1
System: REACTOR COOLANT SYSTEM
Code Category: B-G-1

Code Item	ASME Item Description	Quantity of Total Components	Components Selected	%	Examinations Required		1 # Exams	1 % Schd	2 # Exams	2 % Schd	3 # Exams	3 % Schd
B06.190	PUMPS-FLANGE SURFACE, WHEN CONNECTION DISASSEMBLED	4	0	0	**VOL**	**0**	0	0	0	0	0	0
					SUR	**0**	0	0	0	0	0	0
					VIS	**0**	0	0	0	0	0	0
					TOTAL	**0**	**0**	**0**	**0**	**0**	**0**	**0**

Note:
1. The flange surface examination will be performed only if the surface is exposed as a result of maintenance.

B06.200	PUMPS-NUTS, BUSHINGS, AND WASHERS	64	16	25	**VOL**	**0**	0	0	0	0	0	0
					SUR	**0**	0	0	0	0	0	0
					VIS	**16**	8	50	0	0	8	50
					TOTAL	**16**	**8**	**50**	**0**	**0**	**8**	**50**

Note:
1. Examination is limited to one Reactor Coolant Puump.

	Total for Category B-G-1	340	239	70	**TOTAL**	300	123	41	56	19	121	40

CODE CLASS 1 EXAMINATION SCHEDULE
Table 2

Code Class: 1
System: REACTOR COOLANT SYSTEM
Code Category: B-G-2

Code Item	ASME Item Description	Quantity of Total Components	Components Selected	%	Examinations Required		1 # Exams	1 % Schd	2 # Exams	2 % Schd	3 # Exams	3 % Schd
B07.020	PRESSURIZER-BOLTS, STUDS, AND NUTS	3	3	100	VOL	0	0	0	0	0	0	0
					SUR	0	0	0	0	0	0	0
					VIS	3	1	33	1	33	1	33
					TOTAL	3	1	33	1	33	1	33
B07.030	STEAM GENERATORS-BOLTS, STUDS, AND NUTS	7	4	57	VOL	0	0	0	0	0	0	0
					SUR	0	0	0	0	0	0	0
					VIS	4	2	50	0	0	2	50
					TOTAL	4	2	50	0	0	2	50
B07.050	PIPING-BOLTS, STUDS, AND NUTS	10	10	100	VOL	0	0	0	0	0	0	0
					SUR	0	0	0	0	0	0	0
					VIS	10	4	40	2	20	4	40
					TOTAL	10	4	40	2	20	4	40
B07.070	VALVES-BOLTS, STUDS, AND NUTS	14	0	0	VOL	0	0	0	0	0	0	0
					SUR	0	0	0	0	0	0	0
					VIS	0	0	0	0	0	0	0
					TOTAL	0	0	0	0	0	0	0
	Total for Category B-G-2	34	17	50	TOTAL	17	7	41	3	18	7	41

Note:
1. Examination is limited to one Steam Generator.

Note:
1. No components are selected for examination as none of the valves require examination under Code Category B-M-2.

CODE CLASS 1 EXAMINATION SCHEDULE
Table 2

Code Class: 1
System: REACTOR COOLANT SYSTEM
Code Category: B-J

Code Item	ASME Item Description	Quantity of Total Components	Components Selected	%	Examinations Required		1 # Exams	1 % Schd	2 # Exams	2 % Schd	3 # Exams	3 % Schd
B09.011	CIRCUMFERENTIAL PIPE WELDS >= 4 IN. NOMINAL PIPE SIZE	85	25	29	VOL	25	9	36	3	12	13	52
					SUR	19	9	47	3	16	7	37
					VIS	0	0	0	0	0	0	0
					TOTAL	44	18	41	6	14	20	45

Note:
1. Welds are selected for examination utilizing ASME Section XI, 1974 Edition, Summer 1975 Addenda.
2. The Reactor Vessel Nozzle to Pipe welds are not accessible from the outside surface. Therefore, no surface examination will be performed. See Relief Request RR-A1.

B09.021	CIRCUMFERENTIAL PIPE WELDS < 4 IN. NOMINAL PIPE SIZE	121	31	26	VOL	4	1	25	1	25	2	50
					SUR	31	9	29	8	26	14	45
					VIS	0	0	0	0	0	0	0
					TOTAL	35	10	29	9	26	16	46

1. Welds are selected for examination utilizing ASME Section XI, 1974 Edition, Summer 1975 Addenda.
2. An augmented volumetric and surface examination will be performed on the High Pressure Injection welds.

B09.031	BRANCH CONNECTION WELDS >= 4 IN. NOMINAL PIPE SIZE	2	2	100	VOL	2	1	50	1	50	0	0
					SUR	2	1	50	1	50	0	0
					VIS	0	0	0	0	0	0	0
					TOTAL	4	2	50	2	50	0	0

Note:
1. Welds are selected for examination utilizing ASME Section XI, 1974 Edition, Summer 1975 Addenda.

B09.032	BRANCH CONNECTION WELDS < 4 IN. NOMINAL PIPE SIZE	30	6	20	VOL	6	3	50	2	33	1	17
					SUR	6	3	50	2	33	1	17
					VIS	0	0	0	0	0	0	0
					TOTAL	12	6	50	4	33	2	17

Note:
1. Welds are selected for examination utilizing ASME Section XI, 1974 Edition, Summer 1975 Addenda.
2. Volumetric Examination is an Augmented Examination.

CODE CLASS 1 EXAMINATION SCHEDULE
Table 2

Code Class: 1
System: REACTOR COOLANT SYSTEM
Code Category: B-J

Code Item	ASME Item Description	Quantity of Total Components	Components Selected	%	Examinations Required		1 # Exams	1 % Schd	2 # Exams	2 % Schd	3 # Exams	3 % Schd
B09.040	SOCKET WELDS	44	11	25	**VOL**	**0**	0	0	0	0	0	0
					SUR	**11**	4	36	3	27	4	36
					VIS	**0**	0	0	0	0	0	0
					TOTAL	**11**	**4**	**36**	**3**	**27**	**4**	**36**
	Total for Category B-J	282	75	27	**TOTAL**	106	40	38	24	23	42	40

Note:
1. Welds are selected for examination utilizing ASME Section XI, 1974 Edition, Summer 1975 Addenda.

CODE CLASS 1 EXAMINATION SCHEDULE
Table 2

Code Class: 1
System: REACTOR COOLANT SYSTEM
Code Category: B-K

Code Item	ASME Item Description	Quantity of Total Components	Components Selected	%	Examinations Required		1 # Exams	1 % Schd	2 # Exams	2 % Schd	3 # Exams	3 % Schd
B10.010	PRESSURE VESSELS-WELDED ATTACHMENTS	5	2	40	VOL	1	0	0	0	0	1	100
					SUR	1	0	0	1	100	0	0
					VIS	0	0	0	0	0	0	0
					TOTAL	2	0	0	1	50	1	50
B10.020	PIPING-WELDED ATTACHMENTS	5	1	20	VOL	0	0	0	0	0	0	0
					SUR	1	0	0	1	100	0	0
					VIS	0	0	0	0	0	0	0
					TOTAL	1	0	0	1	100	0	0
	Total for Category B-K	10	3	30	TOTAL	3	0	0	2	67	1	33

Note:
1. When a vessel support has more than one welded attachment, only one welded attachment is examined.
2. Examination is limited to one Steam Generator.
3. Lifting Lugs welded to vessels are exempt from examination.

CODE CLASS 1 EXAMINATION SCHEDULE
Table 2

Code Class: 1
System: REACTOR COOLANT SYSTEM
Code Category: B-L-1

Code Item	ASME Item Description	Quantity of Total Components	Components Selected	%	Examinations Required		1 # Exams	1 % Schd	2 # Exams	2 % Schd	3 # Exams	3 % Schd
B12.010	PUMPS-PUMP CASING WELDS	4	4	100	**VOL**	**0**	0	0	0	0	0	0
					SUR	**0**	0	0	0	0	0	0
					VIS	**4**	0	0	0	0	4	100
					TOTAL	**4**	**0**	**0**	**0**	**0**	**4**	**100**
	Total for Category B-L-1	4	4	100	**TOTAL**	5	0	0	0	0	5	100

Note:
1. Code Case N-481 will be applied.

CODE CLASS 1 EXAMINATION SCHEDULE
Table 2

Code Class: 1
System: REACTOR COOLANT SYSTEM
Code Category: B-L-2

Code Item	ASME Item Description	Quantity of Total Components	Components Selected	%	Examinations Required		1 # Exams	1 % Schd	2 # Exams	2 % Schd	3 # Exams	3 % Schd
B12.020	PUMPS-PUMP CASINGS	4	0	0	VOL	0	0	0	0	0	0	0
					SUR	0	0	0	0	0	0	0
					VIS	0	0	0	0	0	0	0
					TOTAL	0	0	0	0	0	0	0
	Total for Category B-L-2	4	0	0	TOTAL	0	0	0	0	0	0	0

Note:
1. The pump casing internal surfaces will be examined only if the pump is disassembled for maintenance.

CODE CLASS 1 EXAMINATION SCHEDULE
Table 2

Code Class: 1
System: REACTOR COOLANT SYSTEM
Code Category: B-N-1

Code Item	ASME Item Description	Quantity of Total Components	Components Selected	%	Examinations Required		1 # Exams	1 % Schd	2 # Exams	2 % Schd	3 # Exams	3 % Schd
B13.010	REACTOR VESSEL-VESSEL INTERIOR	1	1	100	**VOL**	**0**	0	0	0	0	0	0
					SUR	**0**	0	0	0	0	0	0
					VIS	**3**	1	33	1	33	1	33
					TOTAL	**3**	**1**	**33**	**1**	**33**	**1**	**33**
	Total for Category B-N-1	1	1	100	**TOTAL**	3	1	33	1	33	1	33

Note:
1. Per the Code Category B-N-1 frequency of examinations, the accessible regions will be examined each period.

CODE CLASS 1 EXAMINATION SCHEDULE
Table 2

Code Class: 1
System: REACTOR COOLANT SYSTEM
Code Category: B-N-2

Code Item	ASME Item Description	Quantity of Total Components	Components Selected	%	Examinations Required		1 # Exams	1 % Schd	2 # Exams	2 % Schd	3 # Exams	3 % Schd
B13.060	REACTOR VESSEL (PWR)-INTERIOR ATTACHMENTS BEYOND BELTLINE REGION	12	12	100	**VOL**	**0**	0	0	0	0	0	0
					SUR	**0**	0	0	0	0	0	0
					VIS	**12**	0	0	0	0	12	100
					TOTAL	**12**	**0**	**0**	**0**	**0**	**12**	**100**
Total for Category	**B-N-2**	12	12	100	**TOTAL**	12	0	0	0	0	12	100

Note:
1. The examinations are deferred to the end of the interval.

CODE CLASS 1 EXAMINATION SCHEDULE
Table 2

Code Class: 1
System: REACTOR COOLANT SYSTEM
Code Category: B-N-3

Code Item	ASME Item Description	Quantity of Total Components	Components Selected	%	Examinations Required		1 # Exams	1 % Schd	2 # Exams	2 % Schd	3 # Exams	3 % Schd
B13.070	REACTOR VESSEL (PWR)-CORE SUPPORT STRUCTURE	1	1	100	**VOL**	**0**	0	0	0	0	0	0
					SUR	**0**	0	0	0	0	0	0
					VIS	**1**	0	0	0	0	1	100
					TOTAL	**1**	**0**	**0**	**0**	**0**	**1**	**100**
	Total for Category B-N-3	1	1	100	**TOTAL**	1	0	0	0	0	1	100

Note:
1. The examinations are deferred to the end of the interval.

CODE CLASS 1 EXAMINATION SCHEDULE
Table 2

Code Class: 1
System: REACTOR COOLANT SYSTEM
Code Category: B-O

Code Item	ASME Item Description	Quantity of Total Components	Components Selected	%	Examinations Required		1 # Exams	1 % Schd	2 # Exams	2 % Schd	3 # Exams	3 % Schd
B14.010	REACTOR VESSEL-WELDS IN CONTROL ROD DRIVE HOUSINGS	253	12	5	**VOL**	**0**	0	0	0	0	0	0
					SUR	**12**	1	8	1	8	10	83
					VIS	**0**	0	0	0	0	0	0
					TOTAL	**12**	**1**	**8**	**1**	**8**	**10**	**83**
	Total for Category B-O	253	12	5	**TOTAL**	12	1	8	1	8	10	83

Note:
1. Ten percent (10%) of the peripheral welds are selected which corresponds to 5% of the total. Welds selected may not be the same as those selected in the previous intervals.
2. Examinations will be performed on 3 motor tubes as the welds are made accessible by disassembly of the CRD mechanisms.
3. The examinations may be deferred to the end of the interval.

CODE CLASS 1 EXAMINATION SCHEDULE
Table 2

Code Class: 1
System: REACTOR COOLANT SYSTEM
Code Category: F-A

Code Item	ASME Item Description	Quantity of Total Components	Components Selected	%	Examinations Required		1 # Exams	1 % Schd	2 # Exams	2 % Schd	3 # Exams	3 % Schd
F01.010	CLASS 1 PIPING SUPPORTS	70	19	27	VOL	0	0	0	0	0	0	0
					SUR	0	0	0	0	0	0	0
					VIS	19	8	42	4	21	7	37
					TOTAL	19	8	42	4	21	7	37
F01.040	SUPPORTS OTHER THAN PIPING SUPPORTS	17	9	53	VOL	0	0	0	0	0	0	0
					SUR	0	0	0	0	0	0	0
					VIS	9	3	33	2	22	4	44
					TOTAL	9	3	33	2	22	4	44
	Total for Category F-A	87	28	32	TOTAL	28	11	39	6	21	11	39
Total for System	**REACTOR COOLANT SYSTEM**	1092	450	41	TOTAL	552	200	36	102	18	250	45

Note:
1. For multiple components within a system of similar design, function, and service, the supports of only one of the multiple components are required to be examined.

4.2 ASME Class 2

The following provides a summary of the application of the ASME Section XI, 1995 Edition through the 1996 Addenda to ASME Class 2 components. The application and distribution of examinations for this interval is based upon Program B as defined by Paragraph IWC-2412.

The schedule for the examination of ASME Class 2 components is contained within Table 3.

4.2.1 CATEGORY C-A - PRESSURE RETAINING WELDS IN PRESSURE VESSELS

This Examination Category applies to the Steam Generators and Decay Heat Coolers. The Core Flood Tanks are exempt from examination per IWC-1221(c). Note 2 in Table IWC-2500-1, Category C-A only requires examination of welds at gross structural discontinuities, such as, junctions between different thickness, shell to flange welds, cylindrical shell to conical shell junctions, and head to shell welds. Note 3 states that in the case of multiple vessels of similar design, size, and service, the required examinations may be limited to one vessel or distributed among the vessels.

DECAY HEAT COOLERS

Each Decay Heat Cooler has one shell-to-head weld and one shell-to-flange weld. These welds on one Decay Heat Cooler will be examined during the inspection interval. Relief Request RR-B1 is applicable to the shell-to-flange weld.

STEAM GENERATORS

Each Steam Generator has 6 circumferential shell welds and 2 tubsheet-to-shell welds. Of the 6 circumferential shell welds, two are shell-to-shell welds that do not require examination per Note 2. The 4 shell-to-nozzle belt welds and the 2 tubesheet-to-shell welds distributed between both Steam Generators will be examined during the inspection interval.

4.2.2 CATEGORY C-B - PRESSURE RETAINING NOZZLE WELDS IN VESSELS

This Examination Category applies to the Steam Generators and Decay Heat Coolers. The Core Flood Tanks are exempt from examination per IWC-1221(c). Note 1 in Table IWC-2500-1, Category C-B, excludes manways and handholes. Note 4 allows that in the case of multiple vessels of similar design, size, and service, the required examinations may be limited to one vessel or distributed among the vessels.

DECAY HEAT COOLERS

Each Decay Heat Cooler has an inlet and outlet nozzle. Each nozzle has a nozzle-to-reinforcing plate weld and a reinforcing plate-to-shell weld. The nozzle-to-shell weld is inaccessible from the inside surface. The nozzle-to-reinforcing plate and the reinforcing plate-to-shell weld for both the inlet and outlet nozzles for one Decay Heat Cooler will be examined during the inspection interval. Each inspection period the telltale hole in the reinforcing plate on one Decay Heat Cooler will be examined during its system leakage test.

STEAM GENERATORS

Each Steam Generator has 3 nozzles-to-shell welds consisting of 2 Main Steam Outlet Nozzle-to-Shell welds and one Auxiliary Feedwater Nozzle-to-Shell weld. Three (3) nozzle-to-shell welds on one steam generator will be examined during the inspection interval. The Inside Radius Sections for the two Main Steam Outlet Nozzles on one Steam Generator will be examined. The Auxiliary Feedwater Nozzle Inside Radius Section does not require examination as the nozzle is 6 inches in diameter and therefore does not require examination per Figure IWC-2500-4.

4.2.3 CATEGORY C-C - WELDED ATTACHMENTS FOR VESSELS, PIPING, PUMPS, AND VALVES

Examination Category C-C Note 4 states that, for multiple vessels of similar design, function, and service only one welded attachment of only one of the multiple vessels shall be selected for examination. Each Steam Generator has eight (8) attachment welds where the Main Feedwater Header attaches to the Steam Generator Shell. One attachment weld on one Steam Generator will be examined during the inspection interval.

Examination Category C-C Note 5 states that for piping, pumps, and valves, a sample 10% of the welded attachments associated with the component supports selected for examination under IWF-2510 shall be examined. Ten percent (10%) of the total number of Class 2 piping attachment welds will be examined during the inspection interval. There are no Class 2 pump or valve welded attachments.

4.2.4 CATEGORY C-D - PRESSURE RETAINING BOLTING GREATER THAN 2" IN DIAMETER

The two High Pressure Injection Pumps have bolting greater than 2 inches in diameter. Note 2 states that the examination of bolting for vessels, pumps, and valves may be conducted on one vessel, one pump, one valve among a group of vessels, pumps, and valves in each system required to be examined and which are similar in design, size, function, and service. The bolting on one High Pressure Injection Pump will be examined during the inspection interval. There is no other Class 2 bolting greater than 2 inches in diameter.

4.2.5 CATEGORY C-F-1- PRESSURE RETAINING WELDS IN AUSTENITIC STAINLESS STEEL OR HIGH ALLOY PIPING

The selection criteria specified in Table IWC-2500-1, Category C-F-1, Item C5.10 requires that circumferential piping welds ≥ 3/8" nominal wall thickness for piping > 4" NPS receive volumetric and surface examination. The table does not require any examination on piping > 4" NPS if the nominal wall thickness is < 3/8" (.375"). Applying this criteria to the Containment Spray and Decay Heat Systems results in 100% of the Containment Spray System circumferential welds and approximately 90% of the Decay Heat System circumferential welds not being subjected to any examinations due to the wall thickness of the piping being less than 3/8". Similarly, Item C5.20, which applies to the High Pressure Injection System, requires that circumferential piping welds ≥ 1/5" nominal wall thickness for piping ≥ 2" NPS and ≤ 4" NPS receive a volumetric and surface examination. The table does not require any examination for piping < 1/5" nominal wall thickness for piping ≥ 2" NPS and ≤ 4" NPS. Applying this criteria to the High Pressure Injection System results in approximately 40% of the High Pressure Injection circumferential welds not being subjected to any examinations due to the wall thickness of the piping being less than 1/5". Relief Request RR-B2 requests relief to not exempt the "thin

wall" (i.e. <3/8" for piping > 4" NPS and <1/5" for piping ≥ 2" NPS and ≤ 4" NPS) piping from the NDE requirements.

Relief Request RR-B2 states that Emergency Core Cooling System (ECCS) piping ≥ 1/5" nominal wall thickness and not exempted from examination by IWC-1221 will receive volumetric and surface examinations. Piping with a nominal wall thickness < 1/5" and not exempted from examination by IWC-1221, will receive surface examinations.

Seven and one half percent (7.5%), but not less than 28 welds, of the welds not exempted by IWC-1221 will be examined in accordance with the above criteria during the inspection interval.

4.2.6 CATEGORY C-F-2 - PRESSURE RETAINING WELDS IN CARBON OR LOW ALLOY STEEL PIPING

The selection criteria specified in Table IWC-2500-1, Category C-F-2, Item C5.50 requires that piping welds ≥ 3/8" nominal wall thickness for piping > 4" NPS receive volumetric and surface examination. The table does not require any examination on piping > 4" NPS if the nominal wall thickness is < 3/8".

The Containment Vacuum Relief System, the Containment Vessel Leak Test Line, the Chemical Cleaning Line, and the Service Water System contain piping > NPS 4" with a wall thickness less than 3/8". These welds will not be examined but will be applied to the total C-F-2 weld count.

The Main Steam supply to the Auxiliary Feedwater Pumps contains piping >NPS 4" with a wall thickness less than 3/8". Relief Request RR-B2 requests relief to not exempt the Main Steam to Auxiliary Feedwater piping from NDE requirements. These Main Steam to Auxiliary Feedwater Pump welds will receive a volumetric and surface examination.

Seven and one half percent (7.5%), but not less than 28 welds, of the welds not exempted by IWC-1222 will be examined in accordance with the above criteria during the inspection interval.

4.2.7 CATEGORY C-G - PRESSURE RETAINING WELDS IN PUMPS AND VALVES

Each of the two High Pressure Injection Pumps has 3 casing welds, one in the shell and one each on the inlet and outlet nozzles. Note 1 states that in case of multiple pumps or valves of similar design, size, function, and service in a system, the examination of only one pump and valve among each group of multiple pumps and valves is required. The casing welds on one High Pressure Injection Pump will be examined during the inspection interval.

Each of the two Atmospheric Vent Valves has 4 welds. Note 1 states that in case of multiple pumps or valves of similar design, size, function, and service in a system, the examination of only one pump and valve among each group of multiple pumps and valves is required. The casing welds on one Atmospheric Vent Valve will be examined during the inspection interval.

4.2.8 CATEGORY C-H - ALL PRESSURE RETAINING COMPONENTS

Section 5 describes the Pressure Test Program.

4.2.9 CATEGORY F-A - SUPPORTS

For multiple components within a system of similar design, function, and service, the supports of only one of the multiple components will be examined.

Fifteen percent (15%) of Class 2 piping supports not exempted by IWF-1230 will be examined during the inspection interval. The sample size will be proportional to the total number on non-exempt supports of each type and function within each system.

The examination and testing of snubbers (pin to pin only) will be performed in accordance with Section 7.

CODE CLASS 2 EXAMINATION SCHEDULE
Table 3

Code Class: 2
System: AUX FEEDPUMP & PIPING
Code Category: C-C

Code Item	ASME Item Description	Quantity of Total Components	Components Selected	%	Examinations Required		1 # Exams	1 % Schd	2 # Exams	2 % Schd	3 # Exams	3 % Schd
C03.020	PIPING-WELDED ATTACHMENTS	9	1	11	VOL	0	0	0	0	0	0	0
					SUR	1	1	100	0	0	0	0
					VIS	0	0	0	0	0	0	0
					TOTAL	1	1	100	0	0	0	0
	Total for Category C-C	9	1	11	TOTAL	1	1	100	0	0	0	0

CODE CLASS 2 EXAMINATION SCHEDULE
Table 3

Code Class: 2
System: AUX FEEDPUMP & PIPING
Code Category: C-F-2

Code Item	ASME Item Description	Quantity of Total Components	Components Selected	%	Examinations Required		1 # Exams	1 % Schd	2 # Exams	2 % Schd	3 # Exams	3 % Schd
C05.051	CIRCUMFERENTIAL PIPE WELDS >= 3/8 IN. NOMINAL WALL THICKNESS FOR PIPING >NPS 4	69	6	9	VOL	6	2	33	2	33	2	33
					SUR	6	2	33	2	33	2	33
					VIS	0	0	0	0	0	0	0
					TOTAL	12	4	33	4	33	4	33
	Total for Category C-F-2	69	6	9	TOTAL	12	4	33	4	33	4	33

CODE CLASS 2 EXAMINATION SCHEDULE
Table 3

Code Class: 2
System: AUX FEEDPUMP & PIPING
Code Category: F-A

Code Item	ASME Item Description	Quantity of Total Components	Components Selected	%	Examinations Required		1 # Exams	1 % Schd	2 # Exams	2 % Schd	3 # Exams	3 % Schd
F01.020	CLASS 2 PIPING SUPPORTS	20	3	15	VOL	0	0	0	0	0	0	0
					SUR	0	0	0	0	0	0	0
					VIS	3	1	33	1	33	1	33
					TOTAL	3	1	33	1	33	1	33
	Total for Category F-A	20	3	15	TOTAL	3	1	33	1	33	1	33
	Total for System AUX FEEDPUMP & PIPING	98	10	10	TOTAL	16	6	38	5	31	5	31

CODE CLASS 2 EXAMINATION SCHEDULE
Table 3

Code Class: 2
System: BWST - BORATED WATER
Code Category: C-F-1

Code Item	ASME Item Description	Quantity of Total Components	Components Selected	%	Examinations Required		1 # Exams	1 % Schd	2 # Exams	2 % Schd	3 # Exams	3 % Schd
C05.11B	CIRCUMFERENTIAL PIPE WELD <= 1/5 IN. NOMINAL WALL THICKNESS FOR PIPING > NPS 4	7	0	0	VOL	0	0	0	0	0	0	0
					SUR	0	0	0	0	0	0	0
					VIS	0	0	0	0	0	0	0
					TOTAL	0	0	0	0	0	0	0
	Total for Category C-F-1	7	0	0	TOTAL	0	0	0	0	0	0	0

Note:
1. Non-exempt piping >NPS 4 with a pipe wall thickness less than 1/5 inches is given a "B" designation in the Code Item Number.
2. Welds with a piping wall thickness less than that requiring examination by Table IWC-2500-1 are scheduled per Relief Request RR-B2.
3. Welds in the Borated Water System are included in the total weld count in the Decay Heat System.

CODE CLASS 2 EXAMINATION SCHEDULE
Table 3

Code Class: 2
System: BWST - BORATED WATER
Code Category: F-A

Code Item	ASME Item Description	Quantity of Total Components	Components Selected	%	Examinations Required		1 # Exams	1 % Schd	2 # Exams	2 % Schd	3 # Exams	3 % Schd
F01.020	CLASS 2 PIPING SUPPORTS	1	0	0	VOL	0	0	0	0	0	0	0
					SUR	0	0	0	0	0	0	0
					VIS	0	0	0	0	0	0	0
					TOTAL	0	0	0	0	0	0	0
	Total for Category F-A	1	0	0	TOTAL	0	0	0	0	0	0	0
	Total for System BWST - BORATED WATER	8	0	0	TOTAL	0	0	0	0	0	0	0

CODE CLASS 2 EXAMINATION SCHEDULE
Table 3

Code Class: 2
System: CONTAINMENT PURGE
Code Category: C-F-2

Code Item	ASME Item Description	Quantity of Total Components	Components Selected	%	Examinations Required		1 # Exams	1 % Schd	2 # Exams	2 % Schd	3 # Exams	3 % Schd
C05.051	CIRCUMFERENTIAL PIPE WELDS >= 3/8 IN. NOMINAL WALL THICKNESS FOR PIPING >NPS 4	4	0	0	VOL	0	0	0	0	0	0	0
					SUR	0	0	0	0	0	0	0
					VIS	0	0	0	0	0	0	0
					TOTAL	0	0	0	0	0	0	0
Total for Category	**C-F-2**	4	0	0	TOTAL	0	0	0	0	0	0	0
Total for System	**CONTAINMENT PURGE**	4	0	0	TOTAL	0	0	0	0	0	0	0

CODE CLASS 2 EXAMINATION SCHEDULE
Table 3

Code Class: 2
System: CONTAINMENT SPRAY SYSTEM
Code Category: C-C

Code Item	ASME Item Description	Quantity of Total Components	Components Selected	%	Examinations Required		1 # Exams	1 % Schd	2 # Exams	2 % Schd	3 # Exams	3 % Schd
C03.020	PIPING-WELDED ATTACHMENTS	23	3	13	VOL	0	0	0	0	0	0	0
					SUR	3	1	33	0	0	2	67
					VIS	0	0	0	0	0	0	0
					TOTAL	3	1	33	0	0	2	67
	Total for Category C-C	23	3	13	TOTAL	3	1	33	0	0	2	67

CODE CLASS 2 EXAMINATION SCHEDULE
Table 3

Code Class: 2
System: CONTAINMENT SPRAY SYSTEM
Code Category: C-F-1

Code Item	ASME Item Description	Quantity of Total Components	Components Selected	%	Examinations Required		1 # Exams	1 % Schd	2 # Exams	2 % Schd	3 # Exams	3 % Schd
C05.11A	CIRCUMFERENTIAL PIPE WELD < 3/8 IN. & > 1/5 IN. NOMINAL WALL THICKNESS FOR PIPING > NPS 4	88	7	8	**VOL**	**7**	2	29	2	29	3	43
					SUR	**7**	2	29	2	29	3	43
					VIS	**0**	0	0	0	0	0	0
					TOTAL	**14**	**4**	**29**	**4**	**29**	**6**	**43**

Note:
1. Non-exempt piping >NPS 4 with a pipe wall thickness less than 3/8 inches, but greater than 1/5 inches, is given an "A" designation in the Code Item Number.
2. Welds with a piping wall thickness less than that requiring examination by Table IWC-2500-1 are scheduled per Relief Request RR-B2.

C05.11B	CIRCUMFERENTIAL PIPE WELD <= 1/5 IN. NOMINAL WALL THICKNESS FOR PIPING > NPS 4	12	1	8	**VOL**	**0**	0	0	0	0	0	0
					SUR	**1**	1	100	0	0	0	0
					VIS	**0**	0	0	0	0	0	0
					TOTAL	**1**	**1**	**100**	**0**	**0**	**0**	**0**

1. Non-exempt piping >NPS 4 with a pipe wall thickness less than 1/5 inches is given a "B" designation in the Code Item Number.
2. Welds with a piping wall thickness less than that requiring examination by Table IWC-2500-1 are scheduled per Relief Request RR-B2.

Total for Category	**C-F-1**	100	8	8	**TOTAL**	15	5	33	4	27	6	40

CODE CLASS 2 EXAMINATION SCHEDULE
Table 3

Code Class: 2
System: CONTAINMENT SPRAY SYSTEM
Code Category: F-A

Code Item	ASME Item Description	Quantity of Total Components	Components Selected	%	Examinations Required		1 # Exams	1 % Schd	2 # Exams	2 % Schd	3 # Exams	3 % Schd
F01.020	CLASS 2 PIPING SUPPORTS	41	6	15	VOL	0	0	0	0	0	0	0
					SUR	0	0	0	0	0	0	0
					VIS	6	2	33	1	17	3	50
					TOTAL	6	2	33	1	17	3	50
F01.040	SUPPORTS OTHER THAN PIPING SUPPORTS	2	1	50	VOL	0	0	0	0	0	0	0
					SUR	0	0	0	0	0	0	0
					VIS	1	0	0	1	100	0	0
					TOTAL	1	0	0	1	100	0	0
Total for Category	**F-A**	43	7	16	TOTAL	7	2	29	2	29	3	43
Total for System	**CONTAINMENT SPRAY SYSTEM**	166	18	11	TOTAL	25	8	32	6	24	11	44

1. For multiple components within a system of similar design, function, and service, the supports of only one of the multiple components are required to be examined.

CODE CLASS 2 EXAMINATION SCHEDULE
Table 3

Code Class: 2
System: CONTAINMENT VACUUM RELIEF SYSTEM
Code Category: C-F-2

Code Item	ASME Item Description	Quantity of Total Components	Components Selected	%	Examinations Required		1 # Exams	1 % Schd	2 # Exams	2 % Schd	3 # Exams	3 % Schd
C05.51A	CIRCUMFERENTIAL PIPE WELDS < 3/8 IN. NOMINAL WALL THICKNESS FOR PIPING > NPS 4	10	0	0	VOL	0	0	0	0	0	0	0
					SUR	0	0	0	0	0	0	0
					VIS	0	0	0	0	0	0	0
					TOTAL	0	0	0	0	0	0	0

Note:
1. Non-exempt piping >NPS 4 with a pipe wall thickness less than 3/8 inches, but greater than 1/5 inches, is given an "A" designation in the Code Item Number.
2. Welds do not require examination per Table IWC-2500-1. However, these welds are included in the total C-F-2 weld count.

Total for Category	**C-F-2**	10	0	0	**TOTAL**	0	0	0	0	0	0	0
Total for System	**CONTAINMENT VACUUM RELIEF SYSTEM**	10	0	0	**TOTAL**	0	0	0	0	0	0	0

CODE CLASS 2 EXAMINATION SCHEDULE
Table 3

Code Class: 2
System: CONTAINMENT VESSEL & PENETRATIONS
Code Category: C-F-2

Code Item	ASME Item Description	Quantity of Total Components	Components Selected	%	Examinations Required		1 # Exams	1 % Schd	2 # Exams	2 % Schd	3 # Exams	3 % Schd
C05.51A	CIRCUMFERENTIAL PIPE WELDS < 3/8 IN. NOMINAL WALL THICKNESS FOR PIPING > NPS 4	12	0	0	**VOL**	**0**	0	0	0	0	0	0
					SUR	**0**	0	0	0	0	0	0
					VIS	**0**	0	0	0	0	0	0
					TOTAL	**0**	**0**	**0**	**0**	**0**	**0**	**0**

Note:
1. Non-exempt piping >NPS 4 with a pipe wall thickness less than 3/8 inches, but greater than 1/5 inches, is given an "A" designation in the Code Item Number.
2. Welds do not require examination per Table IWC-2500-1. However, these welds are included in the total C-F-2 weld count.

Total for Category C-F-2	12	0	0	**TOTAL**	0	0	0	0	0	0	0

CODE CLASS 2 EXAMINATION SCHEDULE
Table 3

Code Class: 2
System: CONTAINMENT VESSEL & PENETRATIONS
Code Category: F-A

Code Item	ASME Item Description	Quantity of Total Components	Components Selected	%	Examinations Required		1 # Exams	1 % Schd	2 # Exams	2 % Schd	3 # Exams	3 % Schd
F01.020	CLASS 2 PIPING SUPPORTS	2	0	0	VOL	0	0	0	0	0	0	0
					SUR	0	0	0	0	0	0	0
					VIS	0	0	0	0	0	0	0
					TOTAL	0	0	0	0	0	0	0
	Total for Category F-A	2	0	0	TOTAL	0	0	0	0	0	0	0
	Total for System CONTAINMENT VESSEL & PENETRATIONS	14	0	0	TOTAL	0	0	0	0	0	0	0

CODE CLASS 2 EXAMINATION SCHEDULE
Table 3

Code Class: 2
System: DECAY HEAT & LOW PRESSURE INJECTION
Code Category: C-A

Code Item	ASME Item Description	Quantity of Total Components	Components Selected	%	Examinations Required		1 # Exams	1 % Schd	2 # Exams	2 % Schd	3 # Exams	3 % Schd
C01.010	SHELL CIRCUMFERENTIAL WELDS	2	1	50	VOL	1	0	0	0	0	1	100
					SUR	0	0	0	0	0	0	0
					VIS	0	0	0	0	0	0	0
					TOTAL	1	0	0	0	0	1	100

Note:
1. Relief Request RR-B1 is applicable.
1. Examination is limited to one Decay Heat Cooler.

C01.020	HEAD CIRCUMFERENTIAL WELDS	2	1	50	VOL	1	0	0	1	100	0	0
					SUR	0	0	0	0	0	0	0
					VIS	0	0	0	0	0	0	0
					TOTAL	1	0	0	1	100	0	0

Note:
1. Examination is limited to one Decay Heat Cooler.

	Total for Category C-A	4	2	50	TOTAL	2	0	0	1	50	1	50

CODE CLASS 2 EXAMINATION SCHEDULE
Table 3

Code Class: 2
System: DECAY HEAT & LOW PRESSURE INJECTION
Code Category: C-B

Code Item	ASME Item Description	Quantity of Total Components	Components Selected	%	Examinations Required		1 # Exams	1 % Schd	2 # Exams	2 % Schd	3 # Exams	3 % Schd
C02.031	REINFORCING PLATE WELDS TO NOZZLE AND VESSEL > 1/2 IN. NOMINAL THICKNESS	8	4	50	VOL	0	0	0	0	0	0	0
					SUR	4	1	25	1	25	2	50
					VIS	0	0	0	0	0	0	0
					TOTAL	4	1	25	1	25	2	50
C02.033	NOZZLE-TO-SHELL (OR HEAD) WELDS WHEN INSIDE OF WELD IS INACCESSIBLE > 1/2 IN. NOMINAL THICKNESS	4	2	50	VOL	0	0	0	0	0	0	0
					SUR	0	0	0	0	0	0	0
					VIS	6	2	33	2	33	2	33
					TOTAL	6	2	33	2	33	2	33
	Total for Category C-B	12	6	50	TOTAL	10	3	30	3	30	4	40

Note:
1. Examination is limited to one Decay Heat Cooler.

Note:
1. Per the Code Category C-B frequency of examination requirements, the telltale hole will be examined each period during pressure testing.
2. Examination is limited to one Decay Heat Cooler.

CODE CLASS 2 EXAMINATION SCHEDULE
Table 3

Code Class: 2
System: DECAY HEAT & LOW PRESSURE INJECTION
Code Category: C-C

Code Item	ASME Item Description	Quantity of Total Components	Components Selected	%	Examinations Required		1 # Exams	1 % Schd	2 # Exams	2 % Schd	3 # Exams	3 % Schd
C03.020	PIPING-WELDED ATTACHMENTS	97	10	10	VOL	0	0	0	0	0	0	0
					SUR	10	4	40	2	20	4	40
					VIS	0	0	0	0	0	0	0
					TOTAL	10	4	40	2	20	4	40
	Total for Category C-C	97	10	10	TOTAL	10	4	40	2	20	4	40

CODE CLASS 2 EXAMINATION SCHEDULE
Table 3

Code Class: 2
System: DECAY HEAT & LOW PRESSURE INJECTION
Code Category: C-F-1

Code Item	ASME Item Description	Quantity of Total Components	Components Selected	%	Examinations Required		1 # Exams	1 % Schd	2 # Exams	2 % Schd	3 # Exams	3 % Schd
C05.011	CIRCUMFERENTIAL PIPE WELDS >= 3/8 IN. NOMINAL WALL THICKNESS	42	4	10	VOL	4	1	25	1	25	2	50
					SUR	4	1	25	1	25	2	50
					VIS	0	0	0	0	0	0	0
					TOTAL	8	2	25	2	25	4	50
C05.041	CIRCUMFERENTIAL PIPE BRANCH CONNECTION WELDS => 2 IN. NOMINAL BRANCH PIPE SIZE	12	1	8	VOL	0	0	0	0	0	0	0
					SUR	1	0	0	1	100	0	0
					VIS	0	0	0	0	0	0	0
					TOTAL	1	0	0	1	100	0	0
C05.11A	CIRCUMFERENTIAL PIPE WELD < 3/8 IN. & > 1/5 IN. NOMINAL WALL THICKNESS FOR PIPING > NPS 4	284	21	7	VOL	21	8	38	4	19	9	43
					SUR	21	8	38	4	19	9	43
					VIS	0	0	0	0	0	0	0
					TOTAL	42	16	38	8	19	18	43

Note:
1. Non-exempt piping >NPS 4 with a pipe wall thickness less than 3/8 inches, but greater than 1/5 inches, is given an "A" designation in the Code Item Number.
2. Welds with a piping wall thickness less than that requiring examination by Table IWC-2500-1 are scheduled per Relief Request RR-B2.

C05.11B	CIRCUMFERENTIAL PIPE WELD <= 1/5 IN. NOMINAL WALL THICKNESS FOR PIPING > NPS 4	115	9	8	VOL	0	0	0	0	0	0	0
					SUR	9	4	44	2	22	3	33
					VIS	0	0	0	0	0	0	0
					TOTAL	9	4	44	2	22	3	33

Note:
1. Non-exempt piping >NPS 4 with a pipe wall thickness less than 1/5 inches is given a "B" designation in the Code Item Number.
2. Welds with a piping wall thickness less than that requiring examination by Table IWC-2500-1 are scheduled per Relief Request RR-B2.
3. Welds in the Borated Water System are included in the total weld count in the Decay Heat System.

CODE CLASS 2 EXAMINATION SCHEDULE
Table 3

Code Class: 2
System: DECAY HEAT & LOW PRESSURE INJECTION
Code Category: C-F-1

Code Item	ASME Item Description	Quantity of Total Components	Components Selected	%	Examinations Required		1 # Exams	1 % Schd	2 # Exams	2 % Schd	3 # Exams	3 % Schd
C05.21A	CIRCUMFERENTIAL PIPE WELD < 1/5 IN. NOMINAL WALL THICKNESS FOR PIPING >= NPS 2 AND <= NPS 4	21	2	10	**VOL**	**0**	0	0	0	0	0	0
					SUR	**2**	1	50	0	0	1	50
					VIS	**0**	0	0	0	0	0	0
					TOTAL	**2**	**1**	**50**	**0**	**0**	**1**	**50**

Note:
1. Non-exempt piping >=NPS 2 and <=NPS4 with a pipe wall thickness less than 1/5 inches is given an "A" designation in the Code Item Number.
2. Welds with a piping wall thickness less than that requiring examination by Table IWC-2500-1 are scheduled per Relief Request RR-B2.

Total for Category	**C-F-1**	474	37	8	**TOTAL**	62	23	37	13	21	26	42

CODE CLASS 2 EXAMINATION SCHEDULE
Table 3

Code Class: 2
System: DECAY HEAT & LOW PRESSURE INJECTION
Code Category: F-A

Code Item	ASME Item Description	Quantity of Total Components	Components Selected	%	Examinations Required		1 # Exams	1 % Schd	2 # Exams	2 % Schd	3 # Exams	3 % Schd
F01.020	CLASS 2 PIPING SUPPORTS	185	29	16	VOL	0	0	0	0	0	0	0
					SUR	0	0	0	0	0	0	0
					VIS	29	12	41	6	21	11	38
					TOTAL	29	12	41	6	21	11	38
F01.040	SUPPORTS OTHER THAN PIPING SUPPORTS	2	1	50	VOL	0	0	0	0	0	0	0
					SUR	0	0	0	0	0	0	0
					VIS	1	1	100	0	0	0	0
					TOTAL	1	1	100	0	0	0	0
Total for Category	**F-A**	187	30	16	TOTAL	30	13	43	6	20	11	37
Total for System	**DECAY HEAT & LOW PRESSURE INJECTION**	774	85	11	TOTAL	114	43	38	25	22	46	40

Note:
1. For multiple components within a system of similar design, function, and service, the supports of only one of the multiple components are required to be examined.

CODE CLASS 2 EXAMINATION SCHEDULE
Table 3

Code Class: 2
System: HIGH PRESSURE INJECTION - EMERGENCY CORE
Code Category: C-C

Code Item	ASME Item Description	Quantity of Total Components	Components Selected	%	Examinations Required		1 # Exams	1 % Schd	2 # Exams	2 % Schd	3 # Exams	3 % Schd
C03.020	PIPING-WELDED ATTACHMENTS	64	7	11	VOL	0	0	0	0	0	0	0
					SUR	7	2	29	2	29	3	43
					VIS	0	0	0	0	0	0	0
					TOTAL	7	2	29	2	29	3	43
C03.030	PUMPS-WELDED ATTACHMENTS	12	3	25	VOL	0	0	0	0	0	0	0
					SUR	3	0	0	2	67	1	33
					VIS	0	0	0	0	0	0	0
					TOTAL	3	0	0	2	67	1	33
	Total for Category C-C	76	10	13	TOTAL	10	2	20	4	40	4	40

CODE CLASS 2 EXAMINATION SCHEDULE
Table 3

Code Class: 2
System: HIGH PRESSURE INJECTION - EMERGENCY CORE
Code Category: C-D

Code Item	ASME Item Description	Quantity of Total Components	Components Selected	%	Examinations Required		1 # Exams	1 % Schd	2 # Exams	2 % Schd	3 # Exams	3 % Schd
C04.030	PUMPS-BOLTS AND STUDS	40	20	50	**VOL**	**20**	8	40	4	20	8	40
					SUR	**0**	0	0	0	0	0	0
					VIS	**0**	0	0	0	0	0	0
					TOTAL	**20**	**8**	**40**	**4**	**20**	**8**	**40**
	Total for Category C-D	40	20	50	**TOTAL**	20	8	40	4	20	8	40

CODE CLASS 2 EXAMINATION SCHEDULE
Table 3

Code Class: 2
System: HIGH PRESSURE INJECTION - EMERGENCY CORE
Code Category: C-F-1

Code Item	ASME Item Description	Quantity of Total Components	Components Selected	%	Examinations Required		1 # Exams	1 % Schd	2 # Exams	2 % Schd	3 # Exams	3 % Schd
C05.021	CIRCUMFERENTIAL PIPE WELDS > 1/5 IN. NOMINAL WALL THICKNESS	293	22	8	VOL	22	9	41	4	18	9	41
					SUR	22	9	41	4	18	9	41
					VIS	0	0	0	0	0	0	0
					TOTAL	44	18	41	8	18	18	41
C05.030	SOCKET WELDS	15	1	7	VOL	0	0	0	0	0	0	0
					SUR	1	0	0	1	100	0	0
					VIS	0	0	0	0	0	0	0
					TOTAL	1	0	0	1	100	0	0
C05.041	CIRCUMFERENTIAL PIPE BRANCH CONNECTION WELDS => 2 IN. NOMINAL BRANCH PIPE SIZE	6	1	17	VOL	0	0	0	0	0	0	0
					SUR	1	0	0	0	0	1	100
					VIS	0	0	0	0	0	0	0
					TOTAL	1	0	0	0	0	1	100
C05.11B	CIRCUMFERENTIAL PIPE WELD <= 1/5 IN. NOMINAL WALL THICKNESS FOR PIPING > NPS 4	32	3	9	VOL	0	0	0	0	0	0	0
					SUR	3	0	0	1	33	2	67
					VIS	0	0	0	0	0	0	0
					TOTAL	3	0	0	1	33	2	67

Note:
1. Non-exempt piping >NPS 4 with a pipe wall thickness less than 1/5 inches is given a "B" designation in the Code Item Number.
2. Welds with a piping wall thickness less than that requiring examination by Table IWC-2500-1 are scheduled per Relief Request RR-B2.

CODE CLASS 2 EXAMINATION SCHEDULE
Table 3

Code Class: 2
System: HIGH PRESSURE INJECTION - EMERGENCY CORE
Code Category: C-F-1

Code Item	ASME Item Description	Quantity of Total Components	Components Selected	%	Examinations Required		1 # Exams	1 % Schd	2 # Exams	2 % Schd	3 # Exams	3 % Schd
C05.21A	CIRCUMFERENTIAL PIPE WELD < 1/5 IN. NOMINAL WALL THICKNESS FOR PIPING >= NPS 2 AND <= NPS 4	142	11	8	VOL	0	0	0	0	0	0	0
					SUR	11	5	45	2	18	4	36
					VIS	0	0	0	0	0	0	0
					TOTAL	11	5	45	2	18	4	36
	Total for Category C-F-1	488	38	8	TOTAL	60	23	38	12	20	25	42

Note:
1. Non-exempt piping >=NPS 2 and <=NPS4 with a pipe wall thickness less than 1/5 inches is given an "A" designation in the Code Item Number.
2. Welds with a piping wall thickness less than that requiring examination by Table IWC-2500-1 are scheduled per Relief Request RR-B2.

CODE CLASS 2 EXAMINATION SCHEDULE
Table 3

Code Class: 2
System: HIGH PRESSURE INJECTION - EMERGENCY CORE
Code Category: C-G

Code Item	ASME Item Description	Quantity of Total Components	Components Selected	%	Examinations Required		1 # Exams	1 % Schd	2 # Exams	2 % Schd	3 # Exams	3 % Schd
C06.010	PUMPS-PUMP CASING WELDS	6	3	50	**VOL**	**0**	0	0	0	0	0	0
					SUR	**3**	0	0	2	67	1	33
					VIS	**0**	0	0	0	0	0	0
					TOTAL	**3**	**0**	**0**	**2**	**67**	**1**	**33**
	Total for Category C-G	6	3	50	**TOTAL**	3	0	0	2	67	1	33

CODE CLASS 2 EXAMINATION SCHEDULE
Table 3

Code Class: 2
System: HIGH PRESSURE INJECTION - EMERGENCY CORE
Code Category: F-A

Code Item	ASME Item Description	Quantity of Total Components	Components Selected	%	Examinations Required		1 # Exams	1 % Schd	2 # Exams	2 % Schd	3 # Exams	3 % Schd
F01.020	CLASS 2 PIPING SUPPORTS	142	22	15	VOL	0	0	0	0	0	0	0
					SUR	0	0	0	0	0	0	0
					VIS	22	10	45	4	18	8	36
					TOTAL	22	10	45	4	18	8	36
F01.040	SUPPORTS OTHER THAN PIPING SUPPORTS	2	1	50	VOL	0	0	0	0	0	0	0
					SUR	0	0	0	0	0	0	0
					VIS	1	0	0	0	0	1	100
					TOTAL	1	0	0	0	0	1	100
Total for Category	**F-A**	144	23	16	TOTAL	23	10	43	4	17	9	39
Total for System	**HIGH PRESSURE INJECTION - EMERGENCY CORE COOLING**	754	94	12	TOTAL	116	43	37	26	22	47	41

Note:
1. For multiple components within a system of similar design, function, and service, the supports of only one of the multiple components are required to be examined.

CODE CLASS 2 EXAMINATION SCHEDULE
Table 3

Code Class: 2
System: MAIN FW PUMP & PIPING & FW BOOSTER PUMPS
Code Category: C-C

Code Item	ASME Item Description	Quantity of Total Components	Components Selected	%	Examinations Required		1 # Exams	1 % Schd	2 # Exams	2 % Schd	3 # Exams	3 % Schd
C03.020	PIPING-WELDED ATTACHMENTS	26	3	12	VOL	0	0	0	0	0	0	0
					SUR	3	1	33	0	0	2	67
					VIS	0	0	0	0	0	0	0
					TOTAL	3	1	33	0	0	2	67
	Total for Category C-C	26	3	12	TOTAL	3	1	33	0	0	2	67

CODE CLASS 2 EXAMINATION SCHEDULE
Table 3

Code Class: 2
System: MAIN FW PUMP & PIPING & FW BOOSTER PUMPS
Code Category: C-F-2

Code Item	ASME Item Description	Quantity of Total Components	Components Selected	%	Examinations Required		1 # Exams	1 % Schd	2 # Exams	2 % Schd	3 # Exams	3 % Schd
C05.051	CIRCUMFERENTIAL PIPE WELDS >= 3/8 IN. NOMINAL WALL THICKNESS FOR PIPING >NPS 4	77	6	8	**VOL**	**6**	2	33	1	17	3	50
					SUR	**6**	2	33	1	17	3	50
					VIS	**0**	0	0	0	0	0	0
					TOTAL	**12**	**4**	**33**	**2**	**17**	**6**	**50**
	Total for Category C-F-2	77	6	8	**TOTAL**	12	4	33	2	17	6	50

CODE CLASS 2 EXAMINATION SCHEDULE
Table 3

Code Class: 2
System: MAIN FW PUMP & PIPING & FW BOOSTER PUMPS
Code Category: F-A

Code Item	ASME Item Description	Quantity of Total Components	Components Selected	%	Examinations Required		1 # Exams	1 % Schd	2 # Exams	2 % Schd	3 # Exams	3 % Schd
F01.020	CLASS 2 PIPING SUPPORTS	41	6	15	VOL	0	0	0	0	0	0	0
					SUR	0	0	0	0	0	0	0
					VIS	6	3	50	0	0	3	50
					TOTAL	6	3	50	0	0	3	50
Total for Category	**F-A**	41	6	15	TOTAL	6	3	50	0	0	3	50
Total for System	**MAIN FW PUMP & PIPING & FW BOOSTER PUMPS**	144	15	10	TOTAL	21	8	38	2	10	11	52

CODE CLASS 2 EXAMINATION SCHEDULE
Table 3

Code Class: 2
System: MAIN STEAM SYSTEM
Code Category: C-C

Code Item	ASME Item Description	Quantity of Total Components	Components Selected	%	Examinations Required		1 # Exams	1 % Schd	2 # Exams	2 % Schd	3 # Exams	3 % Schd
C03.020	PIPING-WELDED ATTACHMENTS	37	4	11	VOL	0	0	0	0	0	0	0
					SUR	4	2	50	2	50	0	0
					VIS	0	0	0	0	0	0	0
					TOTAL	4	2	50	2	50	0	0
	Total for Category C-C	37	4	11	TOTAL	4	2	50	2	50	0	0

CODE CLASS 2 EXAMINATION SCHEDULE
Table 3

Code Class: 2
System: MAIN STEAM SYSTEM
Code Category: C-F-2

Code Item	ASME Item Description	Quantity of Total Components	Components Selected	%	Examinations Required		1 # Exams	1 % Schd	2 # Exams	2 % Schd	3 # Exams	3 % Schd
C05.051	CIRCUMFERENTIAL PIPE WELDS >= 3/8 IN. NOMINAL WALL THICKNESS FOR PIPING >NPS 4	99	8	8	**VOL**	**8**	4	50	1	12	3	38
					SUR	**8**	4	50	1	12	3	38
					VIS	**0**	0	0	0	0	0	0
					TOTAL	**16**	**8**	**50**	**2**	**12**	**6**	**38**
C05.081	CIRCUMFERENTIAL WELD IN PIPE BRANCH CONNECTIONS OF BRANCH PIPING >= NPS 2	24	2	8	**VOL**	**0**	0	0	0	0	0	0
					SUR	**2**	1	50	0	0	1	50
					VIS	**0**	0	0	0	0	0	0
					TOTAL	**2**	**1**	**50**	**0**	**0**	**1**	**50**
C05.51A	CIRCUMFERENTIAL PIPE WELDS < 3/8 IN. NOMINAL WALL THICKNESS FOR PIPING > NPS 4	80	10	12	**VOL**	**10**	4	40	2	20	4	40
					SUR	**10**	4	40	2	20	4	40
					VIS	**0**	0	0	0	0	0	0
					TOTAL	**20**	**8**	**40**	**4**	**20**	**8**	**40**
	Total for Category C-F-2	203	20	10	**TOTAL**	38	17	45	6	16	15	39

Note:
1. Non-exempt piping >NPS 4 with a pipe wall thickness less than 3/8 inches, but greater than 1.5 inches, is given an "A" designation in the Code Item Number.
2. Welds with a piping wall thickness less than that requiring examination by Table IWC-2500-1 are scheduled per Relief Request RR-B2.

CODE CLASS 2 EXAMINATION SCHEDULE
Table 3

Code Class: 2
System: MAIN STEAM SYSTEM
Code Category: C-G

Code Item	ASME Item Description	Quantity of Total Components	Components Selected	%	Examinations Required		1 # Exams	1 % Schd	2 # Exams	2 % Schd	3 # Exams	3 % Schd
C06.020	VALVES-VALVE BODY WELDS	8	4	50	**VOL**	**0**	0	0	0	0	0	0
					SUR	**4**	2	50	0	0	2	50
					VIS	**0**	0	0	0	0	0	0
					TOTAL	**4**	**2**	**50**	**0**	**0**	**2**	**50**
	Total for Category C-G	8	4	50	**TOTAL**	4	2	50	0	0	2	50

CODE CLASS 2 EXAMINATION SCHEDULE
Table 3

Code Class: 2
System: MAIN STEAM SYSTEM
Code Category: F-A

Code Item	ASME Item Description	Quantity of Total Components	Components Selected	%	Examinations Required		1 # Exams	1 % Schd	2 # Exams	2 % Schd	3 # Exams	3 % Schd
F01.020	CLASS 2 PIPING SUPPORTS	80	13	16	**VOL**	**0**	0	0	0	0	0	0
					SUR	**0**	0	0	0	0	0	0
					VIS	**13**	5	38	3	23	5	38
					TOTAL	**13**	**5**	**38**	**3**	**23**	**5**	**38**
	Total for Category F-A	80	13	16	**TOTAL**	13	5	38	3	23	5	38
	Total for System MAIN STEAM SYSTEM	328	41	12	**TOTAL**	59	26	44	11	19	22	37

CODE CLASS 2 EXAMINATION SCHEDULE
Table 3

Code Class: 2
System: SERVICE WATER PUMPS & PIPING
Code Category: C-C

Code Item	ASME Item Description	Quantity of Total Components	Components Selected	%	Examinations Required		1 # Exams	1 % Schd	2 # Exams	2 % Schd	3 # Exams	3 % Schd
C03.020	PIPING-WELDED ATTACHMENTS	4	0	0	VOL	0	0	0	0	0	0	0
					SUR	0	0	0	0	0	0	0
					VIS	0	0	0	0	0	0	0
					TOTAL	0	0	0	0	0	0	0
	Total for Category C-C	4	0	0	TOTAL	0	0	0	0	0	0	0

CODE CLASS 2 EXAMINATION SCHEDULE
Table 3

Code Class: 2
System: SERVICE WATER PUMPS & PIPING
Code Category: C-F-2

Code Item	ASME Item Description	Quantity of Total Components	Components Selected	%	Examinations Required		1 # Exams	1 % Schd	2 # Exams	2 % Schd	3 # Exams	3 % Schd
C05.51A	CIRCUMFERENTIAL PIPE WELDS < 3/8 IN. NOMINAL WALL THICKNESS FOR PIPING > NPS 4	32	0	0	VOL	0	0	0	0	0	0	0
					SUR	0	0	0	0	0	0	0
					VIS	0	0	0	0	0	0	0
					TOTAL	0	0	0	0	0	0	0

Note:
1. Non-exempt piping >NPS 4 with a pipe wall thickness less than 3/8 inches, but greater than 1/5 inches, is given an "A" designation in the Code Item Number.
2. Welds do not require examination per Table IWC-2500-1. However, these welds are included in the total C-F-2 weld count.

Total for Category C-F-2	32	0	0	**TOTAL**	0	0	0	0	0	0	0

CODE CLASS 2 EXAMINATION SCHEDULE
Table 3

Code Class: 2
System: SERVICE WATER PUMPS & PIPING
Code Category: F-A

Code Item	ASME Item Description	Quantity of Total Components	Components Selected	%	Examinations Required		1 # Exams	1 % Schd	2 # Exams	2 % Schd	3 # Exams	3 % Schd
F01.020	CLASS 2 PIPING SUPPORTS	8	2	25	VOL	0	0	0	0	0	0	0
					SUR	0	0	0	0	0	0	0
					VIS	2	0	0	1	50	1	50
					TOTAL	2	0	0	1	50	1	50
Total for Category	**F-A**	8	2	25	TOTAL	2	0	0	1	50	1	50
Total for System	**SERVICE WATER PUMPS & PIPING**	44	2	5	TOTAL	2	0	0	1	50	1	50

CODE CLASS 2 EXAMINATION SCHEDULE
Table 3

Code Class: 2
System: STEAM GENERATORS
Code Category: C-A

Code Item	ASME Item Description	Quantity of Total Components	Components Selected	%	Examinations Required		1 # Exams	1 % Schd	2 # Exams	2 % Schd	3 # Exams	3 % Schd
C01.010	SHELL CIRCUMFERENTIAL WELDS	12	4	33	**VOL**	**4**	1	25	1	25	2	50
					SUR	**0**	0	0	0	0	0	0
					VIS	**0**	0	0	0	0	0	0
					TOTAL	**4**	**1**	**25**	**1**	**25**	**2**	**50**

Note:
1. Examination is limited to one Steam Generator.

C01.030	TUBESHEET-TO-SHELL WELD	4	2	50	**VOL**	**2**	1	50	0	0	1	50
					SUR	**0**	0	0	0	0	0	0
					VIS	**0**	0	0	0	0	0	0
					TOTAL	**2**	**1**	**50**	**0**	**0**	**1**	**50**

Note:
1. Examination is limited to one Steam Generator.

	Total for Category C-A	16	6	38	**TOTAL**	6	2	33	1	17	3	50

CODE CLASS 2 EXAMINATION SCHEDULE
Table 3

Code Class: 2
System: STEAM GENERATORS
Code Category: C-B

Code Item	ASME Item Description	Quantity of Total Components	Components Selected	%	Examinations Required		1 # Exams	1 % Schd	2 # Exams	2 % Schd	3 # Exams	3 % Schd
C02.021	NOZZLE-TO-SHELL (OR HEAD) WELD > 1/2 IN. NOMINAL THICKNESS WITHOUT REINFORCING PLATE	6	3	50	**VOL**	**3**	1	33	1	33	1	33
					SUR	**3**	1	33	1	33	1	33
					VIS	**0**	0	0	0	0	0	0
					TOTAL	**6**	**2**	**33**	**2**	**33**	**2**	**33**
C02.022	NOZZLE INSIDE RADIUS SECTION > 1/2 IN. NOMINAL THICKNESS WITHOUT REINFORCING PLATE	6	2	33	**VOL**	**2**	1	50	0	0	1	50
					SUR	**0**	0	0	0	0	0	0
					VIS	**0**	0	0	0	0	0	0
					TOTAL	**2**	**1**	**50**	**0**	**0**	**1**	**50**
	Total for Category C-B	12	5	42	**TOTAL**	8	3	38	2	25	3	38

Note:
1. Examination is limited to one Steam Generator.

Note:
1. Examination is limited to one Steam Generator.

CODE CLASS 2 EXAMINATION SCHEDULE
Table 3

Code Class: 2
System: STEAM GENERATORS
Code Category: C-C

Code Item	ASME Item Description	Quantity of Total Components	Components Selected	%	Examinations Required		1 # Exams	1 % Schd	2 # Exams	2 % Schd	3 # Exams	3 % Schd
C03.010	PRESSURE VESSELS-WELDED ATTACHMENTS	16	1	6	**VOL**	**0**	0	0	0	0	0	0
					SUR	**1**	1	100	0	0	0	0
					VIS	**0**	0	0	0	0	0	0
					TOTAL	**1**	**1**	**100**	**0**	**0**	**0**	**0**

Note:
1. For multiple vessels within a system of similar design, function, and service, only one welded attachment of only one of the multiple vesselsare required to be examined.

Total for Category	**C-C**	16	1	6	**TOTAL**	1	1	100	0	0	0	0
Total for System	**STEAM GENERATORS**	44	12	27	**TOTAL**	15	6	40	3	20	6	40

4.3 ASME Class 3

The following provides a summary of the application of the ASME Section XI, 1995 Edition through the 1996 Addenda to ASME Class 3 components. The application and distribution of examinations for this interval is based upon Program B as defined by Paragraph IWD-2412.

IWD-1220 of ASME Section XI, 1995 Edition through the 1996 Addenda exempts piping NPS 4" and smaller from examination, except for the Auxiliary Feedwater System. In the Auxiliary Feedwater System, piping NPS 1 and smaller and vessels, pumps, and valves and their connections in piping NPS 1 and smaller are exempted from examination.

The schedule for the examination of ASME Class 3 components is contained within Table 4.

4.3.1 CATEGORY D-A - WELDED ATTACHMENTS FOR VESSELS, PIPING, PUMPS, AND VALVES

Examination Category D-A Note 3 states that, for multiple vessels of similar design, function, and service, the welded attachments of only one of the multiple vessels shall be selected for examination. The attachment welds on vessels and at least one vessel of multiple vessels not exempted per IWF-1220 will be examined during the inspection interval.

Examination Category D-A Note 3 states that for piping, pumps, and valves, a sample 10% of the welded attachments shall be examined. Ten percent (10%) of the total number of Class 3 piping attachment welds will be examined during the inspection interval. There are no Class 3 pump or valve welded attachments.

Examination Category D-A Note 3 states that all welded attachments selected for examination shall be those most subject to corrosion as determined by the Owner. This note is not applied to the selection criteria. Instead the welded attachments in all systems are included in the selection population.

4.3.2 CATEGORY D-B - ALL PRESSURE RETAINING COMPONENTS

Section 5 describes the Pressure Test Program.

4.3.3 CATEGORY F-A - SUPPORTS

For multiple components within a system of similar design, function, and service, the supports of only one of the multiple components will be examined.

Ten percent (10%) of Class 3 piping supports not exempted by IWF-1230 will be examined during the inspection interval. The sample size will be proportional to the total number of non-exempt supports of each type and function within each system.

The examination and testing of snubbers (pin to pin only) will be performed in accordance with the Section 7.

CODE CLASS 3 EXAMINATION SCHEDULE
Table 4

Code Class: 3
System: AUX FEEDPUMP & PIPING
Code Category: D-A

Code Item	ASME Item Description	Quantity of Total Components	Components Selected	%	Examinations Required		1 # Exams	1 % Schd	2 # Exams	2 % Schd	3 # Exams	3 % Schd
D01.020	PIPING - WELDED ATTACHMENTS	32	5	16	VOL	0	0	0	0	0	0	0
					SUR	0	0	0	0	0	0	0
					VIS	5	1	20	1	20	3	60
					TOTAL	5	1	20	1	20	3	60
	Total for Category D-A	32	5	16	TOTAL	5	1	20	1	20	3	60

CODE CLASS 3 EXAMINATION SCHEDULE
Table 4

Code Class: 3
System: AUX FEEDPUMP & PIPING
Code Category: F-A

Code Item	ASME Item Description	Quantity of Total Components	Components Selected	%	Examinations Required		1 # Exams	1 % Schd	2 # Exams	2 % Schd	3 # Exams	3 % Schd
F01.030	CLASS 3 PIPING SUPPORTS	108	13	12	VOL	0	0	0	0	0	0	0
					SUR	0	0	0	0	0	0	0
					VIS	13	5	38	3	23	5	38
					TOTAL	13	5	38	3	23	5	38
F01.040	SUPPORTS OTHER THAN PIPING SUPPORTS	2	1	50	VOL	0	0	0	0	0	0	0
					SUR	0	0	0	0	0	0	0
					VIS	1	0	0	0	0	1	100
					TOTAL	1	0	0	0	0	1	100
Total for Category	**F-A**	110	14	13	TOTAL	14	5	36	3	21	6	43
Total for System	**AUX FEEDPUMP & PIPING**	142	19	13	TOTAL	19	6	32	4	21	9	47

Note:
1. For multiple components within a system of similar design, function, and service, the supports of only one of the multiple components are required to be examined.

CODE CLASS 3 EXAMINATION SCHEDULE
Table 4

Code Class: 3
System: CCW - COMMON TO ALL TRAINS
Code Category: D-A

Code Item	ASME Item Description	Quantity of Total Components	Components Selected	%	Examinations Required		1 # Exams	1 % Schd	2 # Exams	2 % Schd	3 # Exams	3 % Schd
D01.010	PRESSURE VESSELS - WELDED ATTACHMENTS	4	2	50	**VOL**	**0**	0	0	0	0	0	0
					SUR	**0**	0	0	0	0	0	0
					VIS	**2**	1	50	0	0	1	50
					TOTAL	**2**	**1**	**50**	**0**	**0**	**1**	**50**
D01.020	PIPING - WELDED ATTACHMENTS	129	14	11	**VOL**	**0**	0	0	0	0	0	0
					SUR	**0**	0	0	0	0	0	0
					VIS	**14**	7	50	2	14	5	36
					TOTAL	**14**	**7**	**50**	**2**	**14**	**5**	**36**
	Total for Category D-A	133	16	12	**TOTAL**	16	8	50	2	12	6	38

Note:
1. For multiple vessels within a system of similar design, function, and service, only one welded attachment of only one of the multiple vesselsare required to be examined.

CODE CLASS 3 EXAMINATION SCHEDULE
Table 4

Code Class: 3
System: CCW - COMMON TO ALL TRAINS
Code Category: F-A

Code Item	ASME Item Description	Quantity of Total Components	Components Selected	%	Examinations Required		1 # Exams	1 % Schd	2 # Exams	2 % Schd	3 # Exams	3 % Schd
F01.030	CLASS 3 PIPING SUPPORTS	211	21	10	VOL	0	0	0	0	0	0	0
					SUR	0	0	0	0	0	0	0
					VIS	21	9	43	4	19	8	38
					TOTAL	21	9	43	4	19	8	38
F01.040	SUPPORTS OTHER THAN PIPING SUPPORTS	7	3	43	VOL	0	0	0	0	0	0	0
					SUR	0	0	0	0	0	0	0
					VIS	3	1	33	0	0	2	67
					TOTAL	3	1	33	0	0	2	67
Total for Category	**F-A**	218	24	11	TOTAL	24	10	42	4	17	10	42
Total for System	**CCW - COMMON TO ALL TRAINS**	351	40	11	TOTAL	40	18	45	6	15	16	40

Note:
1. For multiple components within a system of similar design, function, and service, the supports of only one of the multiple components are required to be examined.

CODE CLASS 3 EXAMINATION SCHEDULE
Table 4

Code Class: 3
System: DECAY HEAT & LOW PRESSURE INJECTION
Code Category: D-A

Code Item	ASME Item Description	Quantity of Total Components	Components Selected	%	Examinations Required		1 # Exams	1 % Schd	2 # Exams	2 % Schd	3 # Exams	3 % Schd
D01.010	PRESSURE VESSELS - WELDED ATTACHMENTS	2	1	50	**VOL**	**0**	0	0	0	0	0	0
					SUR	**0**	0	0	0	0	0	0
					VIS	**1**	0	0	1	100	0	0
					TOTAL	**1**	**0**	**0**	**1**	**100**	**0**	**0**
	Total for Category D-A	2	1	50	**TOTAL**	1	0	0	1	100	0	0

Note:
1. For multiple vessels within a system of similar design, function, and service, only one welded attachment of only one of the multiple vesselsare required to be examined.

CODE CLASS 3 EXAMINATION SCHEDULE
Table 4

Code Class: 3
System: DECAY HEAT & LOW PRESSURE INJECTION
Code Category: F-A

Code Item	ASME Item Description	Quantity of Total Components	Components Selected	%	Examinations Required		1 # Exams	1 % Schd	2 # Exams	2 % Schd	3 # Exams	3 % Schd
F01.040	SUPPORTS OTHER THAN PIPING SUPPORTS	2	1	50	VOL	0	0	0	0	0	0	0
					SUR	0	0	0	0	0	0	0
					VIS	1	0	0	1	100	0	0
					TOTAL	1	0	0	1	100	0	0

Note:
1. For multiple components within a system of similar design, function, and service, the supports of only one of the multiple components are required to be examined.

Total for Category	**F-A**	2	1	50	**TOTAL**	1	0	0	1	100	0	0
Total for System	**DECAY HEAT & LOW PRESSURE INJECTION**	4	2	50	**TOTAL**	2	0	0	2	100	0	0

CODE CLASS 3 EXAMINATION SCHEDULE
Table 4

Code Class: 3
System: DIESEL GENERATORS & AUXILIARIES
Code Category: D-A

Code Item	ASME Item Description	Quantity of Total Components	Components Selected	%	Examinations Required		1 # Exams	1 % Schd	2 # Exams	2 % Schd	3 # Exams	3 % Schd
D01.010	PRESSURE VESSELS - WELDED ATTACHMENTS	6	2	33	VOL	0	0	0	0	0	0	0
					SUR	0	0	0	0	0	0	0
					VIS	2	1	50	1	50	0	0
					TOTAL	2	1	50	1	50	0	0
D01.020	PIPING - WELDED ATTACHMENTS	12	1	8	VOL	0	0	0	0	0	0	0
					SUR	0	0	0	0	0	0	0
					VIS	1	1	100	0	0	0	0
					TOTAL	1	1	100	0	0	0	0
	Total for Category D-A	18	3	17	TOTAL	3	2	67	1	33	0	0

Note:
1. For multiple vessels within a system of similar design, function, and service, only one welded attachment of only one of the multiple vesselsare required to be examined.

CODE CLASS 3 EXAMINATION SCHEDULE
Table 4

Code Class: 3
System: DIESEL GENERATORS & AUXILIARIES
Code Category: F-A

Code Item	ASME Item Description	Quantity of Total Components	Components Selected	%	Examinations Required		1 # Exams	1 % Schd	2 # Exams	2 % Schd	3 # Exams	3 % Schd
F01.030	CLASS 3 PIPING SUPPORTS	24	3	12	VOL	0	0	0	0	0	0	0
					SUR	0	0	0	0	0	0	0
					VIS	3	1	33	1	33	1	33
					TOTAL	3	1	33	1	33	1	33
F01.040	SUPPORTS OTHER THAN PIPING SUPPORTS	6	2	33	VOL	0	0	0	0	0	0	0
					SUR	0	0	0	0	0	0	0
					VIS	2	1	50	1	50	0	0
					TOTAL	2	1	50	1	50	0	0
Total for Category	**F-A**	30	5	17	TOTAL	5	2	40	2	40	1	20
Total for System	**DIESEL GENERATORS & AUXILIARIES**	48	8	17	TOTAL	8	4	50	3	38	1	12

Note:
1. For multiple components within a system of similar design, function, and service, the supports of only one of the multiple components are required to be examined.

CODE CLASS 3 EXAMINATION SCHEDULE
Table 4

Code Class: 3
System: DIESEL OIL STORAGE TANK & TRANSFER PUMPS
Code Category: D-A

Code Item	ASME Item Description	Quantity of Total Components	Components Selected	%	Examinations Required		1 # Exams	1 % Schd	2 # Exams	2 % Schd	3 # Exams	3 % Schd
D01.010	PRESSURE VESSELS - WELDED ATTACHMENTS	2	1	50	VOL	0	0	0	0	0	0	0
					SUR	0	0	0	0	0	0	0
					VIS	1	0	0	0	0	1	100
					TOTAL	1	0	0	0	0	1	100
	Total for Category D-A	2	1	50	TOTAL	1	0	0	0	0	1	100

Note:
1. For multiple vessels within a system of similar design, function, and service, only one welded attachment of only one of the multiple vesselsare required to be examined.

CODE CLASS 3 EXAMINATION SCHEDULE
Table 4

Code Class: 3
System: DIESEL OIL STORAGE TANK & TRANSFER PUMPS
Code Category: F-A

Code Item	ASME Item Description	Quantity of Total Components	Components Selected	%	Examinations Required		1 # Exams	1 % Schd	2 # Exams	2 % Schd	3 # Exams	3 % Schd
F01.040	SUPPORTS OTHER THAN PIPING SUPPORTS	2	1	50	**VOL**	**0**	0	0	0	0	0	0
					SUR	**0**	0	0	0	0	0	0
					VIS	**1**	0	0	0	0	1	100
					TOTAL	**1**	**0**	**0**	**0**	**0**	**1**	**100**

Note:
1. For multiple components within a system of similar design, function, and service, the supports of only one of the multiple components are required to be examined.

Total for Category	**F-A**	2	1	50	**TOTAL**	1	0	0	0	0	1	100
Total for System	**DIESEL OIL STORAGE TANK & TRANSFER PUMPS**	4	2	50	**TOTAL**	2	0	0	0	0	2	100

CODE CLASS 3 EXAMINATION SCHEDULE
Table 4

Code Class: 3
System: ECCS ROOM COOLER COILS (SW SIDE)
Code Category: F-A

Code Item	ASME Item Description	Quantity of Total Components	Components Selected	%	Examinations Required		1 # Exams	1 % Schd	2 # Exams	2 % Schd	3 # Exams	3 % Schd
F01.030	CLASS 3 PIPING SUPPORTS	2	0	0	VOL	0	0	0	0	0	0	0
					SUR	0	0	0	0	0	0	0
					VIS	0	0	0	0	0	0	0
					TOTAL	0	0	0	0	0	0	0
	Total for Category F-A	2	0	0	TOTAL	0	0	0	0	0	0	0
	Total for System ECCS ROOM COOLER COILS (SW SIDE)	2	0	0	TOTAL	0	0	0	0	0	0	0

CODE CLASS 3 EXAMINATION SCHEDULE
Table 4

Code Class: 3
System: MAIN STEAM SYSTEM
Code Category: D-A

Code Item	ASME Item Description	Quantity of Total Components	Components Selected	%	Examinations Required		1 # Exams	1 % Schd	2 # Exams	2 % Schd	3 # Exams	3 % Schd
D01.020	PIPING - WELDED ATTACHMENTS	90	11	12	**VOL**	**0**	0	0	0	0	0	0
					SUR	**0**	0	0	0	0	0	0
					VIS	**11**	4	36	4	36	3	27
					TOTAL	**11**	**4**	**36**	**4**	**36**	**3**	**27**
	Total for Category D-A	90	11	12	**TOTAL**	11	4	36	4	36	3	27

CODE CLASS 3 EXAMINATION SCHEDULE
Table 4

Code Class: 3
System: MAIN STEAM SYSTEM
Code Category: F-A

Code Item	ASME Item Description	Quantity of Total Components	Components Selected	%	Examinations Required		1 # Exams	1 % Schd	2 # Exams	2 % Schd	3 # Exams	3 % Schd
F01.030	CLASS 3 PIPING SUPPORTS	178	18	10	VOL	0	0	0	0	0	0	0
					SUR	0	0	0	0	0	0	0
					VIS	18	6	33	4	22	8	44
					TOTAL	18	6	33	4	22	8	44
	Total for Category F-A	178	18	10	TOTAL	18	6	33	4	22	8	44
	Total for System MAIN STEAM SYSTEM	268	29	11	TOTAL	29	10	34	8	28	11	38

CODE CLASS 3 EXAMINATION SCHEDULE
Table 4

Code Class: 3
System: SERVICE WATER PUMPS & PIPING
Code Category: D-A

Code Item	ASME Item Description	Quantity of Total Components	Components Selected	%	Examinations Required		1 # Exams	1 % Schd	2 # Exams	2 % Schd	3 # Exams	3 % Schd
D01.010	PRESSURE VESSELS - WELDED ATTACHMENTS	3	1	33	VOL	0	0	0	0	0	0	0
					SUR	0	0	0	0	0	0	0
					VIS	1	0	0	0	0	1	100
					TOTAL	1	0	0	0	0	1	100
D01.020	PIPING - WELDED ATTACHMENTS	198	21	11	VOL	0	0	0	0	0	0	0
					SUR	0	0	0	0	0	0	0
					VIS	21	9	43	4	19	8	38
					TOTAL	21	9	43	4	19	8	38
	Total for Category D-A	201	22	11	TOTAL	22	9	41	4	18	9	41

Note:
1. For multiple vessels within a system of similar design, function, and service, only one welded attachment of only one of the multiple vesselsare required to be examined.

CODE CLASS 3 EXAMINATION SCHEDULE
Table 4

Code Class: 3
System: SERVICE WATER PUMPS & PIPING
Code Category: F-A

Code Item	ASME Item Description	Quantity of Total Components	Components Selected	%	Examinations Required		1 # Exams	1 % Schd	2 # Exams	2 % Schd	3 # Exams	3 % Schd
F01.030	CLASS 3 PIPING SUPPORTS	359	36	10	VOL	0	0	0	0	0	0	0
					SUR	0	0	0	0	0	0	0
					VIS	36	15	42	6	17	15	42
					TOTAL	36	15	42	6	17	15	42
F01.040	SUPPORTS OTHER THAN PIPING SUPPORTS	3	1	33	VOL	0	0	0	0	0	0	0
					SUR	0	0	0	0	0	0	0
					VIS	1	0	0	0	0	1	100
					TOTAL	1	0	0	0	0	1	100
Total for Category	**F-A**	362	37	10	TOTAL	37	15	41	6	16	16	43
Total for System	**SERVICE WATER PUMPS & PIPING**	563	59	10	TOTAL	59	24	41	10	17	25	42

Note:
1. For multiple components within a system of similar design, function, and service, the supports of only one of the multiple components are required to be examined.

4.4 ASME Class IWE Containment Examinations

The following provides a summary of the application of the ASME Section XI, 1995 Edition through the 1996 Addenda to the Containment Vessel. The application and distribution of examinations for this interval is based upon Program B as defined by Paragraph IWE-2412.

The schedule for the examination of the Containment Vessel contained within Table 5.

4.4.1 CATEGORY E-A - CONTAINMENT SURFACES

A General Visual Examination of the inside surface of the Containment Vessel will be examined each inspection period as required by 10 CFR 50.55a(b)(2)(ix). A VT-3 examination of the inside surface of the Containment Vessel will be performed at the end of the inspection interval.

4.4.2 CATEGORY E-B - PRESSURE RETAINING WELDS

No examinations are scheduled in this examination category as 10 CFR 50.55a(b)(2)(ix) states these examinations are optional.

4.4.3 CATEGORY E-C - CONTAINMENT SURFACES REQUIRING AUGMENTED EXAMINATION

No areas requiring augmented examinations have been identified at Davis-Besse.

4.4.4 CATEGORY E-D - SEALS, GASKETS, AND MOISTURE BARRIERS

Seals and gaskets will not be examined as discussed in Relief Request RR-E1. There are no moisture barriers installed at Davis-Besse.

4.4.5 CATEGORY E-F - PRESSURE RETAINING DISSIMILAR METAL WELDS

No examinations are scheduled in this examination category as 10 CFR 50.55a(b)(2)(ix) states these examinations are optional.

4.4.6 CATEGORY E-G - PRESSURE RETAINING BOLTING

All pressure retaining bolting will be examined during the inspection interval. Bolted connections will not be torque tested as discussed in Relief Request RR-E6.

4.4.7 CATEGORY E-P - ALL PRESSURE RETAINING COMPONENTS

All tests of pressure retaining components will meet the requirements of 10 CFR 50 Appendix J.

CONTAINMENT VESSEL EXAMINATION SCHEDULE
TABLE 5

Code Class: E
System: CONTAINMENT VESSEL
Code Category: E-A

Code Item	ASME Item Description	Quantity of Total Components	Components Selected	%	Examinations Required		1 # Exams	1 % Schd	2 # Exams	2 % Schd	3 # Exams	3 % Schd
E01.011	ACCESSIBLE SURFACE AREAS (NOT INCLUDING SUBMERGED OR INSULATED AREAS)	1	1	100	**VOL**	**0**	0	0	0	0	0	0
					SUR	**0**	0	0	0	0	0	0
					VIS	**3**	1	33	1	33	1	33
					TOTAL	**3**	**1**	**33**	**1**	**33**	**1**	**33**
E01.012	ACCESSIBLE SURFACE AREAS (INCLUDING SUBMERGED OR INSULATED SURFACES)	1	1	100	**VOL**	**0**	0	0	0	0	0	0
					SUR	**0**	0	0	0	0	0	0
					VIS	**1**	0	0	0	0	1	100
					TOTAL	**1**	**0**	**0**	**0**	**0**	**1**	**100**
	Total for Category E-A	2	2	100	**TOTAL**	4	1	25	1	25	2	50

Note:
1. General Visual Examination is from the inside surface.

Note:
1. Examination is scheduled in the 3rd period of the interval per Table IWE-2500-1.
2. Examination is from the inside surface.

CONTAINMENT VESSEL EXAMINATION SCHEDULE
TABLE 5

Code Class: E
System: CONTAINMENT VESSEL
Code Category: E-D

Code Item	ASME Item Description	Quantity of Total Components	Components Selected	%	Examinations Required		1 # Exams	1 % Schd	2 # Exams	2 % Schd	3 # Exams	3 % Schd
E05.010	SEALS	106	0	0	VOL	0	0	0	0	0	0	0
					SUR	0	0	0	0	0	0	0
					VIS	0	0	0	0	0	0	0
					TOTAL	0	0	0	0	0	0	0

Note:
1. Relief Request RR-E1 is applicable.

E05.020	GASKETS	9	0	0	VOL	0	0	0	0	0	0	0
					SUR	0	0	0	0	0	0	0
					VIS	0	0	0	0	0	0	0
					TOTAL	0	0	0	0	0	0	0

Note:
1. Relief Request RR-E1 is applicable.

	Total for Category E-D	115	0	0	TOTAL	0	0	0	0	0	0	0

CONTAINMENT VESSEL EXAMINATION SCHEDULE
TABLE 5

Code Class: E
System: CONTAINMENT VESSEL
Code Category: E-G

Code Item	ASME Item Description	Quantity of Total Components	Components Selected	%	Examinations Required		1 # Exams	1 % Schd	2 # Exams	2 % Schd	3 # Exams	3 % Schd
E08.010	BOLTED CONNECTIONS	57	57	100	**VOL**	**0**	0	0	0	0	0	0
					SUR	**0**	0	0	0	0	0	0
					VIS	**57**	21	37	10	18	26	46
					TOTAL	**57**	**21**	**37**	**10**	**18**	**26**	**46**

Note:
1. Electrical penetration modules are considered bushings and will be examined only when the connection is disassembled.

E08.020	BOLTED CONNECTIONS - TENSION	57	0	0	**VOL**	**0**	0	0	0	0	0	0
					SUR	**0**	0	0	0	0	0	0
					VIS	**0**	0	0	0	0	0	0
					TOTAL	**0**	**0**	**0**	**0**	**0**	**0**	**0**

Note:
1. The Equipment Hatch Bolting is not subjected to bolt torque testing as the bolted connections are disassembled and reassembled each outage.
2. Relief Request RR-E6 is applicable.

Total for Category	**E-G**	114	57	50	**TOTAL**	49	21	43	10	20	18	37
Total for System	**CONTAINMENT VESSEL**	231	59	26	**TOTAL**	61	22	36	11	18	28	46

4.5 AUGMENTED EXAMINATIONS

In addition to the requirements specified in Section XI, Davis-Besse Nuclear Power Station Unit #1 has committed to meet the following examination requirements.

4.5.1 Reactor Coolant Pump Flywheels

The Reactor Coolant Pump Flywheels will be examined in accordance with the Davis-Besse Unit #1 Technical Specification 4.4.10.1.

4.5.2 High Pressure Injection HP 59 Nozzle Inspection

An enhanced ultrasonic examination of the nozzle region of the High Pressure Injection HP 59 nozzle to the Reactor Coolant System Cold Leg will be examined at or near the end of the inspection interval. This examination is described in Letter Serial Number 1802.

4.5.3 Examination of Thin Wall Piping

ASME Class 2 piping not exempt per the requirements of IWC-1200 will receive nondestructive examinations as described in Relief Request RR-B2.

4.5.4 Internal Auxiliary Feedwater Header

The secured internal auxiliary feedwater header, header to shroud attachment welds, and the external header thermal sleeves will be visually examined during the third period of the inspection interval as required by Davis-Besse Unit #1 Technical Specification 4.4.5.8.

4.5.5 High Pressure Injection Class 1 Piping

10 CFR 50.55a(g)(4)(iii) states that licensees may, but are not required to, perform the surface examinations of the High Pressure Safety Injection Systems specified in Table IWB-2500-1, Examination Category B-J, Item Numbers B9.20, B9.21, and B9.22. In lieu of the requirements of Item Numbers B9.20 and B9.21, 25% of the High Pressure Injection circumferential welds will receive an augmented volumetric and surface examination. This will include the dissimilar metal welds in the High Pressure Injection System.

4.5.6 Decay Heat Pipe to Valve Welds

Relief Request RR-A6 provides an alternative to performing pressure testing of the piping between valve DH 11 and DH 12. The piping welds to DH 11 and DH 12 will be subjected to a surface examination and a volumetric examination during each Inservice Inspection Interval. The volumetric examination is a limited examination as the valve taper prevents ultrasonic scanning from the valve side.

5.0 SYSTEM PRESSURE TESTS

5.1 Class 1 Components

A system leakage test will be performed following each refueling outage with the Reactor Coolant System at full temperature and pressure. Valves will be positioned in their normal position for the plant condition. The examination boundary will extend to and include the second closed valve at the boundary extremity.

At or near the end of the inspection interval, the pressurized boundary will be extended to include the second closed valve with the exception of piping NPS 1 inch and less (See Relief Request RR-A7) and the piping between valves DH 11 and DH 12 (See Relief Request RR-A6).

5.2 Class 2 Components

A system leakage test will be performed on Class 2 systems each inspection period with the system at its normal operating pressure. The examination boundary will extend to the first normally closed valve (including a safety or safety relief valve) or valve capable of automatic closure. Portions of piping which are open ended will not be examined.

Code Case N-522 will be applied to piping that penetrates the containment vessel when the piping and isolation valves that are part of the containment system are Class 2 but the balance of the piping system is outside the scope of ASME Section XI. The test pressure will be the peak calculated containment pressure. Should any leakage occur, the containment isolation valves and the piping between the containment isolation valves will be examined for through-wall leakage through the pressure boundary. These additional requirements are in accordance with NRC Regulatory Guide 1.147 for the use of this code case.

5.3 Class 3 Components

A system leakage test will be performed on Class 3 systems each inspection period with the system at its normal operating pressure. The examination boundary will extend to the first normally closed valve (including a safety or safety relief valve) or valve capable of automatic closure. Portions of piping which are open ended will not be examined.

At or near the end of the inspection interval or during the same inspection period as performed in the Second 10-Year Inspection Interval, a system hydrostatic test will be

performed. This test will be performed in accordance with the requirements of Code Case N-498-1 (See Relief Request RR-C1). The system will be at its normal operating pressure or pressure developed during a test to verify system operability. The examination boundary will extend to the first normally closed valve (including a safety or safety relief valve) or valve capable of automatic closure. Portions of piping which are open ended will not be examined.

5.4 Class MC Components

All tests of pressure retaining components will meet the requirements of 10 CFR 50 Appendix J.

5.5 Repairs/Replacements

In lieu of the hydrostatic pressure test required by IWA-4000 for welded repairs or installation of replacement items by welding, the test requirements of Code Case N-416-1 will be utilized. In addition to the requirements of this code case, a surface examination of the root (pass) layer of butt and socket welds of the pressure retaining boundary of Class 3 components will be performed when the surface examination method is used in accordance with the 1992 Edition of ASME Section III. These additional requirements are in accordance with NRC Regulatory Guide 1.147 for the use of this code case.

5.6 Visual Examinations

During the system leakage tests and hydrostatic tests of Class 1, 2, and 3 systems, an examination in accordance with the requirements of IWA-5240 will be performed.

IWA-5242 requires that insulation be removed from pressure retaining bolting during the VT-2 examination of systems borated for the purpose of controlling reactivity. For Class 1, systems, insulation will not be removed from bolted connections during the pressure test (See Relief Request RR-A3).

When evidence of leakage is detected, the corrective actions of IWA-5250 will be invoked. When leakage is detected at a bolted connection, the requirements of Code Case N-566-1 will be implemented (See Relief Request RR-A10).

5.7 Pressure Test Program

The pressure test program for Class 1, 2, and 3 systems is contained in Table 6.

Pressure Test Zone	Scheduled Period For Test Type 1	2	3	Zone Description	Boundary Definition for Exam by VT-2	System Statistcs
AF01	L	L	H	**AFP 1-1 SUCTION**	AF1 TO AF3, SW5, SS35, AF9, AF19 (INCLUDING S201, P14-1)	DESIGN TEMP (°F) : 305 DESIGN PRESS (PSIG) 150 PSV PSIG ASME XI HYDRO (PSIG) 188
Drawing(s):	M-006D					
Line No.:	HBD-272, EBD-14			ASME XI Class: 3		
SUS:	050-03			Category: D-B		
Notes:	N/A			Code Items: D2.30 D2.40 D2.50 D2.60 D2.70 D2.80		
AF02	L	L	H	**AFP 1-1 & 1-2 DISCHARGE TO SG 1-1 & 1-2**	AF19 TO AF21, AF75, AF74, AF49, AF32, AF599, AF52, AF34, AF608 (INCLUDING AF6452, AF39, AF72, AF3870, AF3869, AF73, AF43, RO416, FE6456, FE6457,FE4630, FE4631)	DESIGN TEMP (°F) : 300 DESIGN PRESS (PSIG) 1350 PSV PSIG ASME XI HYDRO (PSIG) 1688
Drawing(s):	M-006D M-007B					
Line No.:	EBD-14			ASME XI Class: 3 2		
SUS:	050-03			Category: C-H D-B		
Notes:	N/A			Code Items: C7.30 C7.50 C7.70 D2.30 D2.70 D2.80		
AF03	L	L	H	**AFP 1-1 MINI-RECIRC LINES**	AF9 TO SW9, AF64, AF17 (INCLUDING AF15, AF11, AF13, RO501, RO4979)	DESIGN TEMP (°F) : 300 DESIGN PRESS (PSIG) 1350 PSV PSIG ASME XI HYDRO (PSIG) 1688
Drawing(s):	M-006D					
Line No.:	EBD-14, EBD-62			ASME XI Class: 3		
SUS:	050-03			Category: D-B		
Notes:	N/A			Code Items: D2.30 D2.40 D2.70 D2.80		
AF04	L	L	H	**AFP 1-1 COOLING LINES**	AF64 TO AF3, AF4979* (INCLUDING PUMP BRG CLNG AND TURB GOV CLNG, TURB BRG CLNG, E194-1, AF65, AF63, AF7, S203)	DESIGN TEMP (°F) : 100 DESIGN PRESS (PSIG) 75 PSV PSIG 60 ASME XI HYDRO (PSIG) 66
Drawing(s):	M-006D M-003C					
Line No.:	HBD-210, HBD-429			ASME XI Class: 3		
SUS:	050-03			Category: D-B		
Notes:	N/A			Code Items: D2.30 D2.40 D2.50 D2.60 D2.70 D2.80		
AF05	L	L	H	**AFP 1-2 SUCTION**	AF2 TO SW6, AF4, SS34, AF10, AF20 (INCLUDING P14-2, S206)	DESIGN TEMP (°F) : 305 DESIGN PRESS (PSIG) 150 PSV PSIG ASME XI HYDRO (PSIG) 188
Drawing(s):	M-006D					
Line No.:	HBD-272, EBD-14			ASME XI Class: 3		
SUS:	050-03			Category: D-B		
Notes:	N/A			Code Items: D2.30 D2.40 D2.50 D2.60 D2.70 D2.80		

Pressure Test Zone	Scheduled Period For Test Type 1	2	3	Zone Description	Boundary Definition for Exam by VT-2	System Statistcs
AF06	L	L	H	**AFP 1-2 DISCHARGE**	AF20 TO AF22, AF74, AF75 (INCLUDING AF3872, AF3871, AF6451, RO498)	DESIGN TEMP (°F) : 300 DESIGN PRESS (PSIG) 1350 PSV PSIG ASME XI HYDRO (PSIG) 1688
Drawing(s):	M-006D M-007B					
Line No.:	EBD-14			ASME XI Class: 3		
SUS:	050-03			Category: D-B		
Notes:	N/A			Code Items: D2.30 D2.40 D2.70 D2.80		
AF07	L	L	H	**AFP 1-2 MINI-RECIRC LINES**	AF10 TO AF18, SW10, AF67 (INCLUDING AF16, AF12, AF14, RO555, RO4980)	DESIGN TEMP (°F) : 300 DESIGN PRESS (PSIG) 1350 PSV PSIG ASME XI HYDRO (PSIG) 1688
Drawing(s):	M-006D					
Line No.:	EBD-14, EBD-62			ASME XI Class: 3		
SUS:	050-03			Category: D-B		
Notes:	N/A			Code Items: D2.30 D2.40 D2.70 D2.80		
AF08	L	L	H	**AFP 1-2 COOLING LINES**	AF67 TO AF4, AF4980* (INCLUDING PUMP BRG CLNG AND TURB GOV CLNG, TURB BRG CLNG, E194-2, AF66, AF68, AF8, S204)	DESIGN TEMP (°F) : 100 DESIGN PRESS (PSIG) 75 PSV PSIG 60 ASME XI HYDRO (PSIG) 66
Drawing(s):	M-006D M-003C					
Line No.:	HBD-210, HBD-429			ASME XI Class: 3		
SUS:	050-03			Category: D-B		
Notes:	N/A			Code Items: D2.30 D2.40 D2.50 D2.60 D2.70 D2.80		
CC01	H	L	L	**CCW SURGE TANK**	T12 TO NN153, CC119, CC120, CC118, WM30, WM29, CC124, CC123, DW3, PW2, CC1643, CC3602, SS105, SS106 (INCLUDING , CC1412)	DESIGN TEMP (°F) : 200 DESIGN PRESS (PSIG) 100 PSV PSIG 5 ASME XI HYDRO (PSIG) 6
Drawing(s):	M-036A					
Line No.:	HBC-29, HBC-75, HBC-56, HBC-28, HBC-57, HBC-55			ASME XI Class: 3		
SUS:	016-04			Category: D-B		
Notes:	N/A			Code Items: D2.10 D2.20 D2.30 D2.40 D2.70 D2.80		
CC02	H	L	L	**PRIMARY AND DEMINERALIZED WATER TO CCW SURGE TK**	PW2 TO DW3, DW2643, PW19 (INCLUDING DW6)	DESIGN TEMP (°F) : 200 DESIGN PRESS (PSIG) 150 PSV PSIG ASME XI HYDRO (PSIG) 165
Drawing(s):	M-036A					
Line No.:	HBC-57			ASME XI Class: 3		
SUS:	016-04			Category: D-B		
Notes:	N/A			Code Items: D2.30 D2.40 D2.70 D2.80		

Pressure Test Zone	Scheduled Period For Test Type 1	2	3	Zone Description	Boundary Definition for Exam by VT-2	System Statistcs
CC03	L	L	H	**CCW CTMT HEADER**	CC92 TO CC5098, CC5097, CC656, CC657, CC108, CC228, CC227, CC230, CC229, CC231, CC232, CC233, CC234, CC3953*, CC1409, CC1410, CC207, CC208 (INCLUDINGCC1411B, CC93, CC1411A, CC1411C, CC11203, CC97, CC98, CC1407A, CC1407B, CC1407C, FE1405, TW1406, TW1406A) (CTMT P3, CTMT P4)	DESIGN TEMP (°F) : 200 DESIGN PRESS (PSIG) 150 PSV PSIG 150 ASME XI HYDRO (PSIG) 165
Drawing(s):	M-036C M-036B M-040D					
Line No.:	HBB-1, HBB-4, HBB-5, HBB-6, HBB-3, HBB-13, HBB-12, HBC-40			ASME XI Class: 2 3 D-B		
SUS:	016-04			Category: C-H		
Notes:	N/A			Code Items: C7.30 C7.50 C7.70 D2.30 D2.70 D2.80		
CC04	L	L	L	**CCW CTMT P12**	CC1567B TO CC1567A, CC1568 (CTMT P12)	DESIGN TEMP (°F) : 200 DESIGN PRESS (PSIG) 150 PSV PSIG ASME XI HYDRO (PSIG) 165
Drawing(s):	M-036C					
Line No.:	HCB-40			ASME XI Class: 2		
SUS:	016-04			Category: C-H		
Notes:	1			Code Items: C7.30 C7.70		
CC05	L	L	H	**CCW FROM CRD COOLING**	CC627 TO CC108	DESIGN TEMP (°F) : 200 DESIGN PRESS (PSIG) 150 PSV PSIG ASME XI HYDRO (PSIG) 165
Drawing(s):	M-036C					
Line No.:	HBB-13			ASME XI Class: 3		
SUS:	016-04			Category: D-B		
Notes:	N/A			Code Items: D2.30 D2.40 D2.70 D2.80		
CC06	L	L	H	**CCW TO RCP 1-1-1**	CC227 TO CC231, CC183, CC4100 (INCLUDING CC180, UPPER BRG OIL CLR, CC184, FE4136, CC181, MTR ENCLOSURE AIR COOLER, CC185, FE4135, CC182, LWR BRG OILCLR, CC186, FE4134, FE4133)	DESIGN TEMP (°F) : 200 DESIGN PRESS (PSIG) 150 PSV PSIG ASME XI HYDRO (PSIG) 165
Drawing(s):	M-040D M-040C					
Line No.:	HBB-4, HBB-3			ASME XI Class: 3		
SUS:	016-04			Category: D-B		
Notes:	N/A			Code Items: D2.30 D2.40 D2.70 D2.80		
CC07	L	L	H	**CCW TO RCP 1-1-1 SEAL CLR**	CC183 TO CC4100 (INCLUDING SEAL CLR, TW4108)	DESIGN TEMP (°F) : 600 DESIGN PRESS (PSIG) 2500 PSV PSIG ASME XI HYDRO (PSIG)
Drawing(s):	M-040D M-040C					
Line No.:	CCB-27, CCB-28			ASME XI Class: 3		
SUS:	016-04			Category: D-B		
Notes:	N/A			Code Items: D2.30 D2.40 D2.70 D2.80		

Pressure Test Zone	Scheduled Period For Test Type 1	2	3	Zone Description	Boundary Definition for Exam by VT-2	System Statistcs
CC08	L	L	H	**CCW TO RCP 1-1-2**	CC228 TO CC232, CC283, CC4200 (INCLUDING CC280, UPPER BRG OIL CLR, CC284, FE4236, CC281, MTR ENCLOSURE AIR CLR, CC285, FE4235, CC282, LWR BRG OIL CLR,CC286, FE4234,FE4233)	DESIGN TEMP (°F) : 200 DESIGN PRESS (PSIG) 150 PSV PSIG ASME XI HYDRO (PSIG) 165
Drawing(s):	M-040D M-040C					
Line No.:	HBB-4, HBB-3			ASME XI Class: 3		
SUS:	016-04			Category: D-B		
Notes:	N/A			Code Items: D2.30 D2.40 D2.70 D2.80		
CC09	L	L	H	**CCW TO RCP 1-1-2 SEAL CLR**	CC283 TO CC4200 (INCLUDING SEAL CLR, TW4208)	DESIGN TEMP (°F) : 600 DESIGN PRESS (PSIG) 2500 PSV PSIG ASME XI HYDRO (PSIG)
Drawing(s):	M-040D M-040C					
Line No.:	CCB-27, CCB-28			ASME XI Class: 3		
SUS:	016-04			Category: D-B		
Notes:	N/A			Code Items: D2.30 D2.40 D2.70 D2.80		
CC10	L	L	H	**CCW TO RCP 1-2-1**	CC229 TO CC233, CC383, CC4300 (INCLUDING CC380, UPPER BRG OIL CLR, CC384, FE4336, CC381, MTR ENCLOSURE OIL CLR, CC385, FE4335, CC382, LWR BRG OIL CLR,CC386, FE4334, FE4333)	DESIGN TEMP (°F) : 200 DESIGN PRESS (PSIG) 150 PSV PSIG ASME XI HYDRO (PSIG) 165
Drawing(s):	M-040D M-040C					
Line No.:	HBB-4, HBB-3			ASME XI Class: 3		
SUS:	016-04			Category: D-B		
Notes:	N/A			Code Items: D2.30 D2.40 D2.70 D2.80		
CC11	L	L	H	**CCW TO RCP 1-2-1 SEAL CLR**	CC383 TO CC4300, (INCLUDING SEAL CLR, TW4308)	DESIGN TEMP (°F) : 600 DESIGN PRESS (PSIG) 2500 PSV PSIG ASME XI HYDRO (PSIG)
Drawing(s):	M-040D M-040C					
Line No.:	CCB-27, CCB-28			ASME XI Class: 3		
SUS:	016-04			Category: D-B		
Notes:	N/A			Code Items: D2.30 D2.40 D2.70 D2.80		
CC12	L	L	H	**CCW TO RCP 1-2-2**	CC230 TO CC234, CC483, CC4400 (INCLUDING CC480, UPPER BRG OIL CLR, CC484, FE4436, CC481, MTR ENCLOSURE OIL CLR, CC485, FE4435, CC482, LWR BRG OIL CLR,CC486, FE4434, FE4433)	DESIGN TEMP (°F) : 200 DESIGN PRESS (PSIG) 150 PSV PSIG ASME XI HYDRO (PSIG) 165
Drawing(s):	M-040D M-040C					
Line No.:	HBB-4, HBB-3			ASME XI Class: 3		
SUS:	016-04			Category: D-B		
Notes:	N/A			Code Items: D2.30 D2.40 D2.70 D2.80		

Pressure Test Zone	Scheduled Period For Test Type 1	2	3	Zone Description	Boundary Definition for Exam by VT-2	System Statistcs
CC13	L	L	H	**CCW TO RCP 1-2-2 SEAL CLR**	CC483 TO CC4400 (INCLUDING SEAL CLR, TW4408)	DESIGN TEMP (°F) : 600 DESIGN PRESS (PSIG) 2500 PSV PSIG ASME XI HYDRO (PSIG)
Drawing(s):	M-040C M-040D					
Line No.:	CCB-27, CCB-28			ASME XI Class: 3		
SUS:	016-04			Category: D-B		
Notes:	N/A			Code Items: D2.30 D2.40 D2.70 D2.80		
CC14	H	L	L	**CCW PUMP 1-1 AND H/X**	CC1 TO CC32, CC8, CC14, S-036-3 (INCLUDING CC17, P43-1, FE1422, CC23, TW1421, TW1489, TW1788, TW1483, TW1483A, TW1424, E22-1)	DESIGN TEMP (°F) : 200 DESIGN PRESS (PSIG) 150 PSV PSIG ASME XI HYDRO (PSIG) 165
Drawing(s):	M-036A					
Line No.:	HBC-23, HBC-1, HBC-2			ASME XI Class: 3		
SUS:	016-04			Category: D-B		
Notes:	N/A			Code Items: D2.30 D2.40 D2.50 D2.60 D2.70 D2.80		
CC15	H	L	L	**CCW LINE 1**	CC32 TO CC35, CC5095, CC4, CC1, CC121, CC123, CC240, CC244, SW233, CC652, CC653, CC661, CC662, CC243, CC156, CC162, CC239, CC5097, CC2645,(INCLUDING CC175, CORROSION TEST COUPON PIPING, CC165, E27-1, TW1468, CC171, CC531, CC1467, CC172, TW1648, CC532, CC248, CC530, RO3979)	DESIGN TEMP (°F) : 200 DESIGN PRESS (PSIG) 150 PSV PSIG ASME XI HYDRO (PSIG) 165
Drawing(s):	M-036A M-036B					
Line No.:	HBC-2, HBC-23, HBC-27, HBC-28, HBC-76, HBC-50, HBC-25, HBC-26, HBC-35			ASME XI Class: 3		
SUS:	016-04			Category: D-B		
Notes:	N/A			Code Items: D2.30 D2.40 D2.70 D2.80		
CC16	H	L	L	**CCW LINE 1 TO EDG JACKET C.W. H/X**	CC156 TO CC162 (INCLUDING E10-1, FE1473, TW1472, CC161, CC1471)	DESIGN TEMP (°F) : 200 DESIGN PRESS (PSIG) 150 PSV PSIG ASME XI HYDRO (PSIG) 165
Drawing(s):	M-036B					
Line No.:	HBC-26, HBC-27			ASME XI Class: 3		
SUS:	016-04			Category: D-B		
Notes:	N/A			Code Items: D2.30 D2.40 D2.70 D2.80		
CC17	H	L	L	**CCW TO CTMT GAS ANALYZER SYSTEM H/X 1**	CC237 TO CC239, CC243, CC241, CC11048* (INCLUDING CC274, CC275, E197-1)	DESIGN TEMP (°F) : 200 DESIGN PRESS (PSIG) 150 PSV PSIG 125 ASME XI HYDRO (PSIG) 138
Drawing(s):	M-036B					
Line No.:	HBC-2, HBC-76			ASME XI Class: 3		
SUS:	016-04			Category: D-B		
Notes:	N/A			Code Items: D2.30 D2.40 D2.70 D2.80		

Pressure Test Zone	Scheduled Period For Test Type 1	2	3	Zone Description	Boundary Definition for Exam by VT-2	System Statistcs
CC18	L	H	L	**ECCS COOLING LINES TRAIN 1**	CC653 TO CC127, CC661, CC255, CC655, CC659 (INCLUDING CC258, CC256, P37-1 PUMP GEAR & PUMP LO COOLERS (E188-1, E202-1), TW1463, FE2190, CC129, CC271,CC132, CC251, E198-1 FOR P58-1, CC252, CC136, CC131, CC147, CC148, P42-1 BRG HOUSING CLG, CC135, CC152, CC151)	DESIGN TEMP (°F) : 200 DESIGN PRESS (PSIG) 150 PSV PSIG ASME XI HYDRO (PSIG) 165
Drawing(s):	M-036B					
Line No.:	HBC-2, HCB-25, HBC-94, HBC-33, HBC-4			ASME XI Class: 3		
SUS:	016-04			Category: D-B		
Notes:	N/A			Code Items: D2.30 D2.40 D2.50 D2.60 D2.70 D2.80		
CC19	H	L	L	**CCW PUMP 1-2 AND H/X**	CC3 TO CC10, CC16, CC34, S-036-4 (INCLUDING P43-2, CC19, FE1432, TW1431, E22-2, CC25, TW1490, TW1794, TW1435, TW1435A, TW1434)	DESIGN TEMP (°F) : 200 DESIGN PRESS (PSIG) 150 PSV PSIG ASME XI HYDRO (PSIG) 165
Drawing(s):	M-036A					
Line No.:	HBC-2, HBC-23, HBC-1			ASME XI Class: 3		
SUS:	016-04			Category: D-B		
Notes:	N/A			Code Items: D2.30 D2.40 D2.50 D2.60 D2.70 D2.80		
CC20	H	L	L	**CCW LINE 2**	CC34 TO CC38, CC5096, CC655, CC654, CC237, CC241, CC660, CC659, CC124, CC3, CC7, CC122, SW232, CC238, CC242, CC155, CC160, CC5098,CC2649, (INCLUDING CC67, CORROSION TEST COUPON PIPING, CC613, CC166, RO3980, E27-2, CC91, CC173, CC1469, CC174, TW1649, CC533, CC549, TW1470)	DESIGN TEMP (°F) : 200 DESIGN PRESS (PSIG) 150 PSV PSIG ASME XI HYDRO (PSIG) 165
Drawing(s):	M-036A M-036B					
Line No.:	HBC-2, HBC-23, HBC-27, HBC-28, HBC-76, HBC-50, HBC-25, HBC-26, HBC-35			ASME XI Class: 3		
SUS:	016-04			Category: D-B		
Notes:	N/A			Code Items: D2.30 D2.40 D2.70 D2.80		
CC21	H	L	L	**CCW LINE 2 TO EDG JACKET C.W. H/X**	CC155 TO CC160 (INCLUDING E10-2, FE1476, TW1475, CC159, CC1474)	DESIGN TEMP (°F) : 200 DESIGN PRESS (PSIG) 150 PSV PSIG ASME XI HYDRO (PSIG) 165
Drawing(s):	M-036B					
Line No.:	HBC-26, HBC-27			ASME XI Class: 3		
SUS:	016-04			Category: D-B		
Notes:	N/A			Code Items: D2.30 D2.40 D2.70 D2.80		
CC22	H	L	L	**CCW TO CTMT GAS ANALYZER SYSTEM H/X 2**	CC238 TO CC240, CC242, CC244, CC11047* (INCLUDING E197-2, CC278, CC277)	DESIGN TEMP (°F) : 200 DESIGN PRESS (PSIG) 150 PSV PSIG 125 ASME XI HYDRO (PSIG) 138
Drawing(s):	M-036B					
Line No.:	HBC-2, HBC-76			ASME XI Class: 3		
SUS:	016-04			Category: D-B		
Notes:	N/A			Code Items: D2.30 D2.40 D2.70 D2.80		

Pressure Test Zone	Scheduled Period For Test Type 1	2	3	Zone Description	Boundary Definition for Exam by VT-2	System Statistcs
CC23	L	H	L	**CCW TO ECCS COOLING LINE 2**	CC654 TO CC128, CC259, CC660, CC662, CC652 (INCLUDING CC149, CC266, CC263, P37-2 PUMP GEAR & LO CLRS (E188-2, E202-2), FE2191, TW1464, CC130, CC272,P42-2 BRG HOUSING CLG, CC150, CC154, CC153, CC138, CC137, CC254, E198-2 FOR P58-2, CC253, CC133, CC134)	DESIGN TEMP (°F) : 200 DESIGN PRESS (PSIG) 150 PSV PSIG ASME XI HYDRO (PSIG) 165
Drawing(s):	M-036B					
Line No.:	HBC-2, HBC-25, HBC-94, HBC-33, HBC-4			ASME XI Class: 3		
SUS:	016-04			Category: D-B		
Notes:	N/A			Code Items: D2.30 D2.40 D2.50 D2.60 D2.70 D2.80		
CC24	H	L	L	**CCW PUMP 1-3 AND H/X**	CC4 TO CC7 TO CC9, CC15, CC35, CC38, S-036-5 (INCLUDING CC5, CC6, CC2, P43-3, CC18, FE1427, TW1426, E22-3, CC24, TW1789, TW3765, TW1484B, TW1484A,TW1429, CC33, CC36, TW1484, CC37)	DESIGN TEMP (°F) : 200 DESIGN PRESS (PSIG) 150 PSV PSIG ASME XI HYDRO (PSIG) 165
Drawing(s):	M-036A					
Line No.:	HBC-23, HBC-1, HBC-2			ASME XI Class: 3		
SUS:	016-04			Category: D-B		
Notes:	N/A			Code Items: D2.30 D2.40 D2.50 D2.60 D2.70 D2.80		
CC25	H	L	L	**CCW TO NON-ESSENTIAL HEADER**	CC5095 TO CC5096, CC116, CC1495, CC43, CC1460, CC1338, CC1328, CC92 (INCLUDING CC41, CC125)	DESIGN TEMP (°F) : 200 DESIGN PRESS (PSIG) 150 PSV PSIG ASME XI HYDRO (PSIG) 165
Drawing(s):	M-036A M-036C					
Line No.:	HCB-2, HCB-39			ASME XI Class: 3		
SUS:	016-04			Category: D-B		
Notes:	N/A			Code Items: D2.30 D2.40 D2.70 D2.80		
CF01	L	L	L	**CORE FLOOD TANK 1-1**	CFT 1-1 (T9-1) TO CF7B*, CF20, CF1B, CF5B, CF2B, CF16 (INCLUDING CF104, CF54, CF18, CF103)	DESIGN TEMP (°F) : 300 DESIGN PRESS (PSIG) 700 PSV PSIG 700 ASME XI HYDRO (PSIG) 875
Drawing(s):	M-034					
Line No.:	FCB-9, FCB-1, FCB-3, FCB-2, FCB-4			ASME XI Class: 2		
SUS:	051-01			Category: C-H		
Notes:	N/A			Code Items: C7.10 C7.30 C7.70		
CF02	L	L	L	**CORE FLOOD TANK 1-2**	CFT 1-2 (T9-2) TO CF7A*, CF1A, CF19, CF15, CF5A, CF2A (INCLUDING CF55, CF101, CF17, CF100)	DESIGN TEMP (°F) : 300 DESIGN PRESS (PSIG) 700 PSV PSIG 700 ASME XI HYDRO (PSIG) 875
Drawing(s):	M-034					
Line No.:	FCB-9, FCB-1, FCB-2, FCB-3, FCB-4			ASME XI Class: 2		
SUS:	051-01			Category: C-H		
Notes:	N/A			Code Items: C7.10 C7.30 C7.70		

Pressure Test Zone		Scheduled Period For Test Type 1	2	3	Zone Description	Boundary Definition for Exam by VT-2	System Statistcs
CF03		L	L	L	**COMMON CFT VENT LINE (CTMT P47B)**	CF1542 TO CF5A, CF5B (CTMT P47B)	DESIGN TEMP (°F) : 300 DESIGN PRESS (PSIG) 700 PSV PSIG ASME XI HYDRO (PSIG) 875
Drawing(s):	M-034						
Line No.:	FCB-9				ASME XI Class: 2		
SUS:	051-01				Category: C-H		
Notes:	1, 2, 3				Code Items: C7.30 C7.70		
CF04		L	L	L	**CFT 1-2 FILL LINE (CTMT P44A)**	CF1541 TO CF15, (CTMT P44A)	DESIGN TEMP (°F) : 300 DESIGN PRESS (PSIG) 700 PSV PSIG ASME XI HYDRO (PSIG) 875
Drawing(s):	M-034						
Line No.:	FCB-1				ASME XI Class: 2		
SUS:	051-01				Category: C-H		
Notes:	1, 3				Code Items: C7.30 C7.70		
CF05		L	L	L	**COMMON CFT BLEED LINE (CTMT P47A)**	CF1545 TO CF2A, CF2B, CF2C (CTMT P47A)	DESIGN TEMP (°F) : 300 DESIGN PRESS (PSIG) 700 PSV PSIG ASME XI HYDRO (PSIG) 875
Drawing(s):	M-034						
Line No.:	FCB-3				ASME XI Class: 2		
SUS:	051-01				Category: C-H		
Notes:	1, 3				Code Items: C7.30 C7.70		
CF06		L	L	L	**CFT 1-1 FILL LINE (CTMT P71C)**	CF1544 TO CF16 (CTMT P71C)	DESIGN TEMP (°F) : 300 DESIGN PRESS (PSIG) 700 PSV PSIG ASME XI HYDRO (PSIG) 875
Drawing(s):	M-034						
Line No.:	FCB-1				ASME XI Class: 2		
SUS:	051-01				Category: C-H		
Notes:	1, 3				Code Items: C7.30 C7.70		
CF07		L	L	L	**CFT 1-1 DISCHARGE TO RCS**	CF1B TO CF29, CF37	DESIGN TEMP (°F) : 300 DESIGN PRESS (PSIG) 2500 PSV PSIG ASME XI HYDRO (PSIG)
Drawing(s):	M-034 M-033B						
Line No.:	CCB-5				ASME XI Class: 2		
SUS:	051-01				Category: C-H		
Notes:	N/A				Code Items: C7.30 C7.70		

Pressure Test Zone	Scheduled Period For Test Type 1	2	3	Zone Description	Boundary Definition for Exam by VT-2	System Statistcs
CF08	L	L	L	**CFT 1-2 DISCHARGE TO RCS**	CF1A TO CF28, CF45	DESIGN TEMP (°F) : 300 DESIGN PRESS (PSIG) 2500 PSV PSIG ASME XI HYDRO (PSIG)
Drawing(s): M-034 M-033B						
Line No.: CCB-5				ASME XI Class: 2		
SUS: 051-01				Category: C-H		
Notes: N/A				Code Items: C7.30 C7.70		
CF09	L	L	LB	**CF AND DH TRAIN 1 INJECTION LINES TO R/X VESSEL**	CF29 TO CF31, CF39, DH77 (INCLUDING CF38)	DESIGN TEMP (°F) : 650 DESIGN PRESS (PSIG) 2500 PSV PSIG ASME XI HYDRO (PSIG) 2200
Drawing(s): M-033B						
Line No.: CCA-6				ASME XI Class: 1		
SUS: 051-01				Category: B-P		
Notes: 4				Code Items: B15.50 B15.70		
CF10	L	L	LB	**CF AND DH TRAIN 2 INJECTION LINES TO R/X VESSEL**	CF28 TO CF30, CF47, DH76 (INCLUDING CF46)	DESIGN TEMP (°F) : 650 DESIGN PRESS (PSIG) 2500 PSV PSIG ASME XI HYDRO (PSIG) 2200
Drawing(s): M-033B						
Line No.: CCA-6				ASME XI Class: 1		
SUS: 051-01				Category: B-P		
Notes: 4				Code Items: B15.50 B15.70		
CS01	L	L	L	**CS PUMP 1-1 SUCTION**	CS2 TO CS14, CS12, CS4 (INCLUDING CS10 AND P56-1)	DESIGN TEMP (°F) : 300 DESIGN PRESS (PSIG) 75 PSV PSIG ASME XI HYDRO (PSIG) 94
Drawing(s): M-034						
Line No.: HCB-3, GCB-5				ASME XI Class: 2		
SUS: 061-01				Category: C-H		
Notes: N/A				Code Items: C7.30 C7.50 C7.70		
CS02	L	L	L	**CS PUMP 1-1 DISCHARGE**	CS14 TO CS36, CS20 (INCLUDING CS1530, CS16, CS18, CS1547A/B)	DESIGN TEMP (°F) : 300 DESIGN PRESS (PSIG) 300 PSV PSIG ASME XI HYDRO (PSIG) 375
Drawing(s): M-034						
Line No.: GCB-5				ASME XI Class: 2		
SUS: 061-01				Category: C-H		
Notes: N/A				Code Items: C7.30 C7.70		

Pressure Test Zone	Scheduled Period For Test Type 1	2	3	Zone Description	Boundary Definition for Exam by VT-2	System Statistcs
CS03	--	--	--	**LOWER CTMT SPRAY RING HEADER**	CS20 TO SA533, LOWER CTMT SPRAY RING HEADER (CTMT P26)	DESIGN TEMP (°F) : 300 DESIGN PRESS (PSIG) 200 PSV PSIG ASME XI HYDRO (PSIG)
Drawing(s): M-034						
Line No.: HCB-4, HCB-8				ASME XI Class: 2		
SUS: 061-01				Category: C-H		
Notes: 5				Code Items: C7.30 C7.70		
CS04	L	L	L	**CS PUMP 1-2 SUCTION**	CS1 TO CS13, CS3, CS11 (INCLUDING CS9 AND P56-2)	DESIGN TEMP (°F) : 300 DESIGN PRESS (PSIG) 75 PSV PSIG ASME XI HYDRO (PSIG) 94
Drawing(s): M-034						
Line No.: HCB-3, GCB-5				ASME XI Class: 2		
SUS: 061-01				Category: C-H		
Notes: N/A				Code Items: C7.30 C7.50 C7.70		
CS05	L	L	L	**CS PUMP 1-2 DISCHARGE**	CS13 TO CS33, CS19 (INCLUDING CS1531, CS15, CS17, CS1535A/B)	DESIGN TEMP (°F) : 300 DESIGN PRESS (PSIG) 300 PSV PSIG ASME XI HYDRO (PSIG) 375
Drawing(s): M-034						
Line No.: GCB-5				ASME XI Class: 2		
SUS: 061-01				Category: C-H		
Notes: N/A				Code Items: C7.30 C7.70		
CS06	--	--	--	**UPPER CTMT SPRAY RING HEADER**	CS19 TO SA532, UPPER CTMT SPRAY RING HEADER (CTMT P25)	DESIGN TEMP (°F) : 300 DESIGN PRESS (PSIG) 200 PSV PSIG ASME XI HYDRO (PSIG)
Drawing(s): M-034						
Line No.: HCB-4, HCB-8				ASME XI Class: 2		
SUS: 061-01				Category: C-H		
Notes: 5				Code Items: C7.30 C7.70		
CV01	L	L	L	**CTMT VESSEL LEAK TEST LINE (CTMT P17)**	FLANGE OUTSIDE CTMT TO FLANGE INSIDE CTMT (INCLUDING CV343) (CTMT P17)	DESIGN TEMP (°F) : 264 DESIGN PRESS (PSIG) 45 PSV PSIG ASME XI HYDRO (PSIG) 57
Drawing(s): M-029B						
Line No.: HCB-49, HBB-20				ASME XI Class: 2		
SUS: 060-03				Category: C-H		
Notes: 1, 2, 3				Code Items: C7.30 C7.70		

Pressure Test Zone		Scheduled Period For Test Type 1	2	3	Zone Description	Boundary Definition for Exam by VT-2	System Statistcs
CV02		L	L	L	**H2 AND AIRBORNE RADIATION SAMPLE LINES FROM (CTMT P71B)**	CV5011A TO CV5010A (CTMT P71B)	DESIGN TEMP (°F) : 264 DESIGN PRESS (PSIG) 50 PSV PSIG ASME XI HYDRO (PSIG) 63
Drawing(s):	M-029B				ASME XI Class: 2		
Line No.:	HCB-38				Category: C-H		
SUS:	060-03				Code Items: C7.30 C7.70		
Notes:	2, 3						
CV03		L	L	L	**H2 AND AIRBORNE RADIATION SAMPLE LINES FROM (CTMT P68B)**	CV5010B TO CV5011B (CTMT P68B)	DESIGN TEMP (°F) : 264 DESIGN PRESS (PSIG) 50 PSV PSIG ASME XI HYDRO (PSIG) 63
Drawing(s):	M-029B				ASME XI Class: 2		
Line No.:	HCB-38				Category: C-H		
SUS:	060-03				Code Items: C7.30 C7.70		
Notes:	2, 3						
CV04		L	L	L	**H2 AND AIRBORNE RADIATION SAMPLE LINES FROM (CTMT P73B)**	CV5011C TO CV5010C (CTMT P73B)	DESIGN TEMP (°F) : 264 DESIGN PRESS (PSIG) 50 PSV PSIG ASME XI HYDRO (PSIG) 63
Drawing(s):	M-029B				ASME XI Class: 2		
Line No.:	HCB-38				Category: C-H		
SUS:	060-03				Code Items: C7.30 C7.70		
Notes:	2, 3						
CV05		L	L	L	**H2 AND AIRBORNE RADIATION SAMPLE LINES FROM (CTMT P74B)**	CV5010D TO CV5011D (CTMT P74B)	DESIGN TEMP (°F) : 264 DESIGN PRESS (PSIG) 50 PSV PSIG ASME XI HYDRO (PSIG) 63
Drawing(s):	M-029B				ASME XI Class: 2		
Line No.:	HCB-38				Category: C-H		
SUS:	060-03				Code Items: C7.30 C7.70		
Notes:	2, 3						
CV06		L	L	L	**H2 AND AIRBORNE RADIATION SAMPLE LINES RETURN (CTMT P42B)**	CV5010E TO CV315 (INCLUDING CV124) (CTMT P42B)	DESIGN TEMP (°F) : 264 DESIGN PRESS (PSIG) 50 PSV PSIG ASME XI HYDRO (PSIG) 63
Drawing(s):	M-029B				ASME XI Class: 2		
Line No.:	HCB-39				Category: C-H		
SUS:	060-02				Code Items: C7.30 C7.70		
Notes:	2, 3						

Pressure Test Zone		Scheduled Period For Test Type 1	2	3	Zone Description	Boundary Definition for Exam by VT-2	System Statistcs
CV07		L	L	L	**H2 AND AIRBORNE RADIATION SAMPLE LINES RETURN (CTMT P43B)**	CV5011E TO CV313 (INCLUDING CV125) (CTMT P43B)	DESIGN TEMP (°F) : 264 DESIGN PRESS (PSIG) 50 PSV PSIG ASME XI HYDRO (PSIG) 63
Drawing(s):	M-029B						
Line No.:	HCB-39				ASME XI Class: 2		
SUS:	060-02				Category: C-H		
Notes:	2, 3				Code Items: C7.30 C7.70		
CV08		L	L	L	**CTMT PURGE EXHAUST (CTMT P34)**	CV5008 TO CV5007 (CTMT P34)	DESIGN TEMP (°F) : 264 DESIGN PRESS (PSIG) 45 PSV PSIG ASME XI HYDRO (PSIG) 57
Drawing(s):	M-029E						
Line No.:	HBB-18				ASME XI Class: 2		
SUS:	060-02				Category: C-H		
Notes:	1, 2, 3, 6				Code Items: C7.30 C7.70		
CV09		L	L	L	**CTMT PURGE SUPPLY (CTMT P33)**	CV5005 TO CV5006 (CTMT P33)	DESIGN TEMP (°F) : 264 DESIGN PRESS (PSIG) 45 PSV PSIG ASME XI HYDRO (PSIG) 57
Drawing(s):	M-029E						
Line No.:	HBB-17				ASME XI Class: 2		
SUS:	060-02				Category: C-H		
Notes:	1, 2, 3, 6				Code Items: C7.30 C7.70		
CV10		L	L	L	**H2 DILUTION SYSTEM EXHAUST (CTMT P51)**	CV5037 TO CTMT (INCLUDING CV5038) (CTMT P51)	DESIGN TEMP (°F) : 264 DESIGN PRESS (PSIG) 45 PSV PSIG ASME XI HYDRO (PSIG) 57
Drawing(s):	M-029D						
Line No.:	HBB-16				ASME XI Class: 2		
SUS:	060-02				Category: C-H		
Notes:	2, 3				Code Items: C7.30 C7.70		
CV11		L	L	L	**H2 DILUTION SUPPLY TRAIN 1 (CTMT P67)**	CV5090 TO CV210 (CTMT P67)	DESIGN TEMP (°F) : 264 DESIGN PRESS (PSIG) 45 PSV PSIG ASME XI HYDRO (PSIG) 57
Drawing(s):	M-029D						
Line No.:	HBB-15				ASME XI Class: 2		
SUS:	060-02				Category: C-H		
Notes:	2, 3				Code Items: C7.30 C7.70		

Pressure Test Zone		Scheduled Period For Test Type 1	2	3	Zone Description	Boundary Definition for Exam by VT-2	System Statistcs
CV12		L	L	L	**H2 DILUTION SUPPLY TRAIN 2 (CTMT P69)**	CV5065 TO CV209 (CTMT P69)	DESIGN TEMP (°F) : 264 DESIGN PRESS (PSIG) 45 PSV PSIG ASME XI HYDRO (PSIG) 57
Drawing(s):	M-029D						
Line No.:	HBB-15				ASME XI Class: 2		
SUS:	060-02				Category: C-H		
Notes:	2, 3				Code Items: C7.30 C7.70		
CV13		L	L	H	**H2 DILUTION BLOWER 1-1 DISCHARGE**	C62-1 TO CV3877*, CV5090, CV151, SW334 (INCLUDING SEPARATOR S404-1, CV186, RO4813A, RO4813B, RO4813C, RO4813D)	DESIGN TEMP (°F) : 150 DESIGN PRESS (PSIG) 18 PSV PSIG ASME XI HYDRO (PSIG) 28
Drawing(s):	M-029D						
Line No.:	HBC-73, HBC-35				ASME XI Class: 3		
SUS:	060-02				Category: D-B		
Notes:	2				Code Items: D2.30 D2.40 D2.50 D2.60 D2.70 D2.80		
CV14		--	--	--	**H2 DILUTION BLOWER 1-1 SUCTION**	8 IN. AIR INTAKE & SCREEN (INCLUDING VALVE CV117, MUFFLER, C62-1) TO C62-1	DESIGN TEMP (°F) : 150 DESIGN PRESS (PSIG) 18 PSV PSIG ASME XI HYDRO (PSIG)
Drawing(s):	M-029D						
Line No.:	HBC-73				ASME XI Class: 3		
SUS:	060-02				Category: D-B		
Notes:	7				Code Items: D2.30 D2.40 D2.70 D2.80		
CV15		L	L	H	**H2 DILUTION BLOWER 1-2 DISCHARGE**	C62-2 TO CV3876*, CV5065, CV136, SW330 (INCLUDING SEPARATOR S404-2, CV187, RO4814B, RO4814A, RO4814C, RO4814D)	DESIGN TEMP (°F) : 150 DESIGN PRESS (PSIG) 18 PSV PSIG ASME XI HYDRO (PSIG) 28
Drawing(s):	M-029D						
Line No.:	HBC-73, HBC-44				ASME XI Class: 3		
SUS:	060-02				Category: D-B		
Notes:	2				Code Items: D2.30 D2.40 D2.50 D2.60 D2.70 D2.80		
CV16		--	--	--	**H2 DILUTION BLOWER 1-2 SUCTION**	8 IN. AIR INTAKE TO C62-2 (INCLUDING C62-2 MUFFLER, CV191, CV135)	DESIGN TEMP (°F) : 150 DESIGN PRESS (PSIG) 18 PSV PSIG ASME XI HYDRO (PSIG) 20
Drawing(s):	M-029D						
Line No.:	HBC-73				ASME XI Class: 3		
SUS:	060-02				Category: D-B		
Notes:	7				Code Items: D2.30 D2.40 D2.70 D2.80		

Pressure Test Zone		Scheduled Period For Test Type 1	2	3	Zone Description	Boundary Definition for Exam by VT-2	System Statistcs
CV17		L	H	L	**EMERGENCY VENT SYSTEM FAN & FILTER UNITS**	CV5037 TO CV138, CV152, CV61 (INCLUDING CV60, DEMISTER, FILTER F60, RO5063, TW4858B, TW4859, TW4858A)	DESIGN TEMP (°F) : 150 DESIGN PRESS (PSIG) 18 PSV PSIG ASME XI HYDRO (PSIG) 20
Drawing(s):	M-029D				ASME XI Class: 3		
Line No.:	HBC-74				Category: D-B		
SUS:	060-02				Code Items: D2.30 D2.40 D2.70 D2.80		
Notes:	2						
CV18		--	--	--	**EMERGENCY VENT TO STATION VENT**	CV61 TO STATION VENT DUCT WORK	DESIGN TEMP (°F) : DESIGN PRESS (PSIG) PSV PSIG ASME XI HYDRO (PSIG)
Drawing(s):	M-029D				ASME XI Class: 3		
Line No.:	HBC-74				Category: D-B		
SUS:	060-02				Code Items: D2.30 D2.40 D2.70 D2.80		
Notes:	7						
CV19		L	L	H	**POST ACCIDENT SAMPLING**	CV5011A TO CV5011C, CV82, CV355, CV330, CV332, CV121, CV3032, CV5010E, CV80, CV357, CV145, CV 150 CV430C (INCLUDING CV544,CV104, CV103, CV543, CV106, CV122,CV338, CV333, CV331, CV430B, CV430, CV430A, T-216)	DESIGN TEMP (°F) : 264 DESIGN PRESS (PSIG) 50 PSV PSIG ASME XI HYDRO (PSIG) 63
Drawing(s):	M-029B M-029C						
Line No.:	HCB-38, HCB-39				ASME XI Class: 3		
SUS:	060-02				Category: D-B		
Notes:	2				Code Items: D2.30 D2.40 D2.70 D2.80		
CV20		L	L	H	**POST ACCIDENT SAMPLING**	CV5010B TO CV81, CV356, CV5010D, CV83, CV354, (INCLUDING CV540, CV76, CV75, CV539, CV203)	DESIGN TEMP (°F) : 264 DESIGN PRESS (PSIG) 50 PSV PSIG ASME XI HYDRO (PSIG) 63
Drawing(s):	M-029B M-029C						
Line No.:	HCB-38, HCB-39				ASME XI Class: 3		
SUS:	060-02				Category: D-B		
Notes:	2				Code Items: D2.30 D2.40 D2.70 D2.80		
CV21		L	L	H	**POST ACCIDENT SAMPLE LINES**	CV5011E TO CV335, CV336, CV204, CV3010 (INCLUDING CV341, CV339, CV340, CV205)	DESIGN TEMP (°F) : 264 DESIGN PRESS (PSIG) 50 PSV PSIG ASME XI HYDRO (PSIG) 63
Drawing(s):	M-029B M-029C						
Line No.:	HCB-39				ASME XI Class: 3		
SUS:	060-02				Category: D-B		
Notes:	2				Code Items: D2.30 D2.40 D2.70 D2.80		

Pressure Test Zone		Scheduled Period For Test Type 1	2	3	Zone Description	Boundary Definition for Exam by VT-2	System Statistcs
CV22		L	L	L	**CTMT VACUUM BKR (CTMT P8A)**	(CTMT P8A) CTMT ATMOS. TO CV5080 (INCLUDING CV5070)	DESIGN TEMP (°F) : 264 DESIGN PRESS (PSIG) 45 PSV PSIG ASME XI HYDRO (PSIG) 57
Drawing(s):	M-029B						
Line No.:	HBB-19				ASME XI Class: 2		
SUS:	060-02				Category: C-H		
Notes:	1, 2, 3				Code Items: C7.30 C7.70		
CV23		L	L	L	**CTMT VACUUM BKR (CTMT P8B)**	(CTMT P8B) CTMT ATMOS. TO CV5081 (INCLUDING CV5071)	DESIGN TEMP (°F) : 264 DESIGN PRESS (PSIG) 45 PSV PSIG ASME XI HYDRO (PSIG) 57
Drawing(s):	M-029B						
Line No.:	HBB-19				ASME XI Class: 2		
SUS:	060-02				Category: C-H		
Notes:	1, 2, 3				Code Items: C7.30 C7.70		
CV24		L	L	L	**CTMT VACUUM BKR (CTMT P8C)**	(CTMT P8C) CTMT ATMOS. TO CV5082 (INCLUDING CV5072)	DESIGN TEMP (°F) : 264 DESIGN PRESS (PSIG) 45 PSV PSIG ASME XI HYDRO (PSIG) 57
Drawing(s):	M-029B						
Line No.:	HBB-19				ASME XI Class: 2		
SUS:	060-02				Category: C-H		
Notes:	1, 2, 3				Code Items: C7.30 C7.70		
CV25		L	L	L	**CTMT VACUUM BKR (CTMT P8D)**	(CTMT P8D) CTMT ATMOS. TO CV5083 (INCLUDING CV5073)	DESIGN TEMP (°F) : 264 DESIGN PRESS (PSIG) 45 PSV PSIG ASME XI HYDRO (PSIG) 57
Drawing(s):	M-029B						
Line No.:	HBB-19				ASME XI Class: 2		
SUS:	060-02				Category: C-H		
Notes:	1, 2, 3				Code Items: C7.30 C7.70		
CV26		L	L	L	**CTMT VACUUM BKR (CTMT P8E)**	(CTMT P8E) CTMT ATMOS. TO CV5084 (INCLUDING CV5074)	DESIGN TEMP (°F) : 264 DESIGN PRESS (PSIG) 45 PSV PSIG ASME XI HYDRO (PSIG) 57
Drawing(s):	M-029B						
Line No.:	HBB-19				ASME XI Class: 2		
SUS:	060-02				Category: C-H		
Notes:	1, 2, 3				Code Items: C7.30 C7.70		

Pressure Test Zone		Scheduled Period For Test Type 1	2	3	Zone Description	Boundary Definition for Exam by VT-2	System Statistcs
CV27		L	L	L	**CTMT VACUUM BKR (CTMT P8F)**	(CTMT P8F) CTMT ATMOS. TO CV5085 (INCLUDING CV5075)	DESIGN TEMP (°F) : 264 DESIGN PRESS (PSIG) 45 PSV PSIG ASME XI HYDRO (PSIG) 57
Drawing(s):	M-029B						
Line No.:	HBB-19				ASME XI Class: 2		
SUS:	060-02				Category: C-H		
Notes:	1, 2, 3				Code Items: C7.30 C7.70		
CV28		L	L	L	**CTMT VACUUM BKR (CTMT P8G)**	(CTMT P8G) CTMT ATMOS. TO CV5086 (INCLUDING CV5076)	DESIGN TEMP (°F) : 264 DESIGN PRESS (PSIG) 45 PSV PSIG ASME XI HYDRO (PSIG) 57
Drawing(s):	M-029B						
Line No.:	HBB-19				ASME XI Class: 2		
SUS:	060-02				Category: C-H		
Notes:	1, 2, 3				Code Items: C7.30 C7.70		
CV29		L	L	L	**CTMT VACUUM BKR (CTMT P8H)**	(CTMT P8H) CTMT ATMOS. TO CV5087 (INCLUDING CV5077)	DESIGN TEMP (°F) : 264 DESIGN PRESS (PSIG) 45 PSV PSIG ASME XI HYDRO (PSIG) 57
Drawing(s):	M-029B						
Line No.:	HBB-19				ASME XI Class: 2		
SUS:	060-02				Category: C-H		
Notes:	1, 2, 3				Code Items: C7.30 C7.70		
CV30		L	L	L	**CTMT VACUUM BKR (CTMT P8I)**	(CTMT P8I) CTMT ATMOS. TO CV5088 (INCLUDING CV5078)	DESIGN TEMP (°F) : 264 DESIGN PRESS (PSIG) 45 PSV PSIG ASME XI HYDRO (PSIG) 57
Drawing(s):	M-029B						
Line No.:	HBB-19				ASME XI Class: 2		
SUS:	060-02				Category: C-H		
Notes:	1, 2, 3				Code Items: C7.30 C7.70		
CV31		L	L	L	**CTMT VACUUM BKR (CTMT P8J)**	(CTMT P8J) CTMT ATMOS. TO CV5089 (INCLUDING CV5079)	DESIGN TEMP (°F) : 264 DESIGN PRESS (PSIG) 45 PSV PSIG ASME XI HYDRO (PSIG) 57
Drawing(s):	M-029B						
Line No.:	HBB-19				ASME XI Class: 2		
SUS:	060-02				Category: C-H		
Notes:	1, 2, 3				Code Items: C7.30 C7.70		

Pressure Test Zone		Scheduled Period For Test Type 1	2	3	Zone Description	Boundary Definition for Exam by VT-2	System Statistcs
CV32		--	--	--	**CTMT INSTRUMENTATION**	(CTMT P73C) CTMT ATMOS. TO ANNULUS ATMOS. (INCLUDING CV645B, CV645A, CV645C)	DESIGN TEMP (°F) : 264 DESIGN PRESS (PSIG) 45 PSV PSIG ASME XI HYDRO (PSIG)
Drawing(s):	M-029B						
Line No.:	HCB-46				ASME XI Class: 2		
SUS:	060-02				Category: C-H		
Notes:	8				Code Items: C7.30 C7.70		
CV33		--	--	--	**CTMT INSTRUMENTATION**	(CTMT P73A) CTMT ATMOS. TO CV2002B	DESIGN TEMP (°F) : 264 DESIGN PRESS (PSIG) 45 PSV PSIG ASME XI HYDRO (PSIG)
Drawing(s):	M-029B						
Line No.:	HCB-47				ASME XI Class: 2		
SUS:	060-02				Category: C-H		
Notes:	8				Code Items: C7.30 C7.70		
CV34		--	--	--	**CTMT INSTRUMENTATION**	(CTMT P74A) CTMT ATMOS. TO CV2003B	DESIGN TEMP (°F) : 264 DESIGN PRESS (PSIG) 45 PSV PSIG ASME XI HYDRO (PSIG)
Drawing(s):	M-029B						
Line No.:	HCB-47				ASME XI Class: 2		
SUS:	060-02				Category: C-H		
Notes:	8				Code Items: C7.30 C7.70		
CV35		--	--	--	**CTMT INSTRUMENTATION**	(CTMT P71A) CTMT ATMOS. TO CV2000B	DESIGN TEMP (°F) : 264 DESIGN PRESS (PSIG) 45 PSV PSIG ASME XI HYDRO (PSIG)
Drawing(s):	M-029B						
Line No.:	HCB-47				ASME XI Class: 2		
SUS:	060-02				Category: C-H		
Notes:	8				Code Items: C7.30 C7.70		
CV36		--	--	--	**CTMT INSTRUMENTATION**	(CTMT P72A) CTMT ATMOS. TO CV2001B	DESIGN TEMP (°F) : 264 DESIGN PRESS (PSIG) 45 PSV PSIG ASME XI HYDRO (PSIG)
Drawing(s):	M-029B						
Line No.:	HCB-47				ASME XI Class: 2		
SUS:	060-02				Category: C-H		
Notes:	8				Code Items: C7.30 C7.70		

Pressure Test Zone		Scheduled Period For Test Type 1	2	3	Zone Description	Boundary Definition for Exam by VT-2	System Statistcs
CV37		--	--	--	**CTMT INSTRUMENTATION**	(CTMT P72C) CTMT ATMOS. TO ANNULUS ATMOS., CV310, CV624B (INCLUDING CV624A, CV624C)	DESIGN TEMP (°F) : 264 DESIGN PRESS (PSIG) 45 PSV PSIG ASME XI HYDRO (PSIG)
Drawing(s):	M-029B						
Line No.:	HCB-46				ASME XI Class: 2		
SUS:	060-02				Category: C-H		
Notes:	8				Code Items: C7.30 C7.70		
CV38		--	--	--	**CTMT INSTRUMENTATION**	CV5011B TO CTMT ATMOS.	DESIGN TEMP (°F) : 264 DESIGN PRESS (PSIG) 45 PSV PSIG ASME XI HYDRO (PSIG)
Drawing(s):	M-029B						
Line No.:	HBC-46				ASME XI Class: 2		
SUS:	060-02				Category: C-H		
Notes:	7				Code Items: C7.30 C7.70		
CV39		--	--	--	**CTMT INSTRUMENTATION**	CV5010A TO CTMT ATMOS.	DESIGN TEMP (°F) : 264 DESIGN PRESS (PSIG) 45 PSV PSIG ASME XI HYDRO (PSIG)
Drawing(s):	M-029B						
Line No.:	HBC-46				ASME XI Class: 2		
SUS:	060-02				Category: C-H		
Notes:	7				Code Items: C7.30 C7.70		
CV40		--	--	--	**CTMT INSTRUMENTATION**	CV313 TO CTMT ATMOS.	DESIGN TEMP (°F) : 264 DESIGN PRESS (PSIG) 45 PSV PSIG ASME XI HYDRO (PSIG)
Drawing(s):	M-029B						
Line No.:	HBC-46				ASME XI Class: 2		
SUS:	060-02				Category: C-H		
Notes:	7				Code Items: C7.30 C7.70		
CV41		--	--	--	**CTMT INSTRUMENTATION**	CV5011D TO CTMT ATMOS.	DESIGN TEMP (°F) : 264 DESIGN PRESS (PSIG) 45 PSV PSIG ASME XI HYDRO (PSIG)
Drawing(s):	M-029B						
Line No.:	HBC-46				ASME XI Class: 2		
SUS:	060-02				Category: C-H		
Notes:	7				Code Items: C7.30 C7.70		

Pressure Test Zone		Scheduled Period For Test Type 1	2	3	Zone Description	Boundary Definition for Exam by VT-2	System Statistcs
CV42		--	--	--	**CTMT INSTRUMENTATION**	CV5010C TO CTMT ATMOS.	DESIGN TEMP (°F) : 264 DESIGN PRESS (PSIG) 45 PSV PSIG ASME XI HYDRO (PSIG)
Drawing(s):	M-029B						
Line No.:	HBC-46				ASME XI Class: 2		
SUS:	060-02				Category: C-H		
Notes:	7				Code Items: C7.30 C7.70		
DA01		L	L	H	**EMERGENCY DIESEL GENERATOR STARTING AIR RECEIVER 1-1-1**	EMER DIESEL GEN STARTING AIR RECEIVER (T86-1) TO DA1135*, DA24, DA3783, DA70, DA72, SKID K5-1 (INCLUDING DA30, DA26, DA4)	DESIGN TEMP (°F) : 150 DESIGN PRESS (PSIG) 260 PSV PSIG 275 ASME XI HYDRO (PSIG) 303
Drawing(s):	M-017B						
Line No.:	HBC-84, HBC-79, HBD-453, HBC-60, HBC-59				ASME XI Class: 3		
SUS:	024-01				Category: D-B		
Notes:	2, 9				Code Items: D2.10 D2.20 D2.30 D2.40 D2.70 D2.80		
DA02		L	L	H	**EMER DIESEL GENERATOR STARTING AIR RECEIVER 1-1-2**	EMER DIESEL GEN STARTING AIR RECEIVER (T86-2) TO DA1138*, DA38, DA3784, DA79, DA81, SKID K5-1 (INCLUDING DA44, DA40, DA6)	DESIGN TEMP (°F) : 150 DESIGN PRESS (PSIG) 260 PSV PSIG 275 ASME XI HYDRO (PSIG) 303
Drawing(s):	M-017B						
Line No.:	HBC-84, HBC-79, HBD-453, HBC-60, HBC-59				ASME XI Class: 3		
SUS:	024-01				Category: D-B		
Notes:	2, 9				Code Items: D2.10 D2.20 D2.30 D2.40 D2.70 D2.80		
DA03		--	--	--	**DIESEL GENERATOR AIR INTAKE AND EXHAUST K5-1**	AIR INTAKE FILTER TO K5-1; AND K5-1 TO EXHAUST	DESIGN TEMP (°F) : DESIGN PRESS (PSIG) PSV PSIG ASME XI HYDRO (PSIG)
Drawing(s):	M-017B						
Line No.:	HBD-358, HBD-359				ASME XI Class: 3		
SUS:	024-01				Category: D-B		
Notes:	7, 9				Code Items: D2.30 D2.40 D2.70 D2.80		
DA04		H	L	L	**EMER DIESEL GENERATOR STARTING AIR RECEIVER 1-2-1**	EMER DIESEL GEN STARTING AIR RECEIVER (T86-3) TO DA1141*, DA25, DA3785, DA89, SKID K5-2 (INCLUDING DA31, DA27, DA5)	DESIGN TEMP (°F) : 150 DESIGN PRESS (PSIG) 260 PSV PSIG 275 ASME XI HYDRO (PSIG) 303
Drawing(s):	M-017B						
Line No.:	HBC-84, HBC-79, HBD-453, HBC-60, HBC-59				ASME XI Class: 3		
SUS:	024-01				Category: D-B		
Notes:	2, 9				Code Items: D2.10 D2.20 D2.30 D2.40 D2.70 D2.80		

Pressure Test Zone	Scheduled Period For Test Type 1	2	3	Zone Description	Boundary Definition for Exam by VT-2	System Statistcs
DA05	L	H	L	**EMER DIESEL GENERATOR STARTING AIR RECEIVER 1-2-2**	EMER DIESEL GEN STARTING AIR RECEIVER (T86-4) TO DA39, DA1144*, DA3786, DA90, SKID K5-2 (INCLUDING DA45, DA41, DA7)	DESIGN TEMP (°F) : 150 DESIGN PRESS (PSIG) 260 PSV PSIG 275 ASME XI HYDRO (PSIG) 303
Drawing(s):	M-017B			ASME XI Class: 3		
Line No.:	HBC-84, HBC-79, HBD-453, HBC-60, HBC-59					
SUS:	024-01			Category: D-B		
Notes:	2, 9			Code Items: D2.10 D2.20 D2.30 D2.40 D2.70 D2.80		
DA06	--	--	--	**DIESEL GENERATOR AIR INTAKE AND EXHAUST K5-2**	AIR INTAKE FILTER TO K5-2; AND K5-2 TO EXHAUST	DESIGN TEMP (°F) : DESIGN PRESS (PSIG) PSV PSIG ASME XI HYDRO (PSIG)
Drawing(s):	M-017B			ASME XI Class: 3		
Line No.:	HBD-358, HBD-359					
SUS:	024-01			Category: D-B		
Notes:	7, 9			Code Items: D2.30 D2.40 D2.70 D2.80		
DH01	L	L	L	**BWST SUPPLY TO ECCS**	LINE HCB-2 FROM BWST DISCHARGE TO DH79	DESIGN TEMP (°F) : DESIGN PRESS (PSIG) PSV PSIG ASME XI HYDRO (PSIG)
Drawing(s):	M-033A					
Line No.:	HCB-2			ASME XI Class: 2		
SUS:	049-02			Category: C-H		
Notes:	N/A			Code Items: C7.30 C7.70		
DH02	L	L	L	**BWST COMMON SUPPLY TO ECCS TRAINS 1 & 2 SUCTION**	DH79 TO DH7B, DH7A, SS13, BW7	DESIGN TEMP (°F) : 150 DESIGN PRESS (PSIG) 75 PSV PSIG ASME XI HYDRO (PSIG) 83
Drawing(s):	M-033A					
Line No.:	HCB-2, HCB-5			ASME XI Class: 2		
SUS:	049-02			Category: C-H		
Notes:	N/A			Code Items: C7.30 C7.70		
DH03	L	L	L	**BWST SUPPLY TO ECCS #1 SUCTION**	DH7B TO HP10, DH130, CS2, DH2733, DH1508* (INCLUDING DH81, DH129) TO EMERGENCY SUMP RECIRCULATION LINE GUARDPIPE AT P31.	DESIGN TEMP (°F) : 300 DESIGN PRESS (PSIG) 75 PSV PSIG 75 ASME XI HYDRO (PSIG) 94
Drawing(s):	M-033A M-033B M-034					
Line No.:	HCB-2, HCB-3, HCB-1			ASME XI Class: 2		
SUS:	049-02			Category: C-H		
Notes:	N/A			Code Items: C7.30 C7.70		

Pressure Test Zone	Scheduled Period For Test Type 1	2	3	Zone Description	Boundary Definition for Exam by VT-2	System Statistcs
DH04	L	L	L	**RCS SUPPLY TO DHP 1-1 SUCTION**	DH23 TO DH11, DH4849*, DH29, DH31, DH33, DH35, DH2733, DH55, DH45, DH41, DH26, DH1518, DH1518A, DH37, DH4909A, DH4909B (INCLUDING DH10, DH1517, DH1517A, P42-1, DH43, FE4909, TWDH8B) (CTMT P29).	DESIGN TEMP (°F) : 350 DESIGN PRESS (PSIG) 300 PSV PSIG 320 ASME XI HYDRO (PSIG) 400
Drawing(s):	M-033B M-033C					
Line No.:	GCB-7, GCB-3, GCB-8, GCB-1			ASME XI Class: 2		
SUS:	049-02			Category: C-H		
Notes:	N/A			Code Items: C7.30 C7.50 C7.70		
DH05	L	L	L	**DHP 1-1 DISCHARGE**	DH45 TO DH55, DH830, DH125, DH47, DH53, DH61, DH64, DH1529*, DH66, DH77 (INCLUDING DH831, DH128, DH127, DH13B, DH14B, E27-1, RO1505, TWDH4B, FEDH2B,DH1B, DH CLR 1 Saddle tell-tails 1/C02.033.2663.1 & 1/C02.033.2664) (CTMT P28).	DESIGN TEMP (°F) : 350 DESIGN PRESS (PSIG) 450 PSV PSIG 450 ASME XI HYDRO (PSIG) 400
Drawing(s):	M-033B M-033C					
Line No.:	GCB-3, GCB-1, GCB-10, GCB-2, CCB-6			ASME XI Class: 2		
SUS:	049-02			Category: C-B C-H		
Notes:	11, 12			Code Items: C2.33 C7.30 C7.70		
DH06	L	L	L	**DHP 1-1 SAMPLE SOURCE**	DH41 TO DH172, DH4633 (INCLUDING DH59)	DESIGN TEMP (°F) : 350 DESIGN PRESS (PSIG) 450 PSV PSIG ASME XI HYDRO (PSIG) 563
Drawing(s):	M-033B M-042C					
Line No.:	GCB-6, GCB-1			ASME XI Class: 2		
SUS:	049-02			Category: C-H		
Notes:	N/A			Code Items: C7.30 C7.70		
DH07	L	L	L	**BWST SUPPLY TO ECCS #2 SUCTION**	DH7A TO HP11, DH131, CS1, DH2734, DH1509* (INCLUDING DH82, DH132) TO EMERGENCY SUMP RECIRCULATION LINE GUARDPIPE AT CTMT P30	DESIGN TEMP (°F) : 300 DESIGN PRESS (PSIG) 75 PSV PSIG 75 ASME XI HYDRO (PSIG) 94
Drawing(s):	M-033A M-033C M-034					
Line No.:	HCB-1, HCB-3, HCB-2			ASME XI Class: 2		
SUS:	049-02			Category: C-H		
Notes:	N/A			Code Items: C7.30 C7.70		
DH08	L	L	L	**RCS SUPPLY TO DHP 1-2**	DH2734 TO DH26, DH1518, DH28, DH30, DH32, DH34, DH36, DH54, DH44, DH40 (INCLUDING DH42, P42-2, FE4908, TWDH8A)	DESIGN TEMP (°F) : 350 DESIGN PRESS (PSIG) 300 PSV PSIG ASME XI HYDRO (PSIG) 375
Drawing(s):	M-033C					
Line No.:	GCB-8, GCB-7, GCB-3, GCB-1			ASME XI Class: 2		
SUS:	049-02			Category: C-H		
Notes:	N/A			Code Items: C7.30 C7.50 C7.70		

Pressure Test Zone	Scheduled Period For Test Type 1	2	3	Zone Description	Boundary Definition for Exam by VT-2	System Statistcs
DH09	L	L	L	**DHP 1-2 DISCHARGE**	DH44 TO DH54, DH200, DH830, DH125, DH62, DH1550*, DH65, DH76, DH63, DH52, DH46,(INCLUDING DH13A, DH178, DH14A, E27-2, RO1515, TWDH4A, FEDH2A,DH1A, DH126) (CTMT P27)	DESIGN TEMP (°F) : 350 DESIGN PRESS (PSIG) 450 PSV PSIG 450 ASME XI HYDRO (PSIG) 563
Drawing(s):	M-033C M-033B					
Line No.:	GCB-10, GCB-3, GCB-1, GCB-2, CCB-6			ASME XI Class: 2		
SUS:	049-02			Category: C-H		
Notes:	11			Code Items: C7.30 C7.70		
DH10	L	L	L	**DHP 1-2 SAMPLE SOURCE**	DH40 TO DH171, DH4636 (INCLUDING DH60)	DESIGN TEMP (°F) : 350 DESIGN PRESS (PSIG) 450 PSV PSIG ASME XI HYDRO (PSIG) 563
Drawing(s):	M-033C M-042C					
Line No.:	GCB-1, GCB-6			ASME XI Class: 2		
SUS:	049-02			Category: C-H		
Notes:	N/A			Code Items: C7.30 C7.70		
DH11	L	L	L	**DH PRESSURIZER SPRAY LINE (CTMT P74C)**	DH2736 TO DH2735 (CTMT P74C)	DESIGN TEMP (°F) : 350 DESIGN PRESS (PSIG) 2000 PSV PSIG 236 ASME XI HYDRO (PSIG) 260
Drawing(s):	M-033B					
Line No.:	CCB-10			ASME XI Class: 2		
SUS:	049-02			Category: C-H		
Notes:	N/A			Code Items: C7.30 C7.70		
DH12	L	L	L	**REFUEL CANAL FILL (CTMT P49)**	DH87 TO DH88, (CTMT P49)	DESIGN TEMP (°F) : 150 DESIGN PRESS (PSIG) 150 PSV PSIG ASME XI HYDRO (PSIG) 165
Drawing(s):	M-033B					
Line No.:	HCB-11, HCB-36			ASME XI Class: 2		
SUS:	049-02			Category: C-H		
Notes:	1, 3			Code Items: C7.30 C7.70		
DH13	L	L	H	**BWST RECIRC LINES FROM DH**	DH83 TO DH66, DH67, DH68, DH69, DH65, DH2761*	DESIGN TEMP (°F) : 200 DESIGN PRESS (PSIG) 200 PSV PSIG 236 ASME XI HYDRO (PSIG) 260
Drawing(s):	M-033 M-033A					
Line No.:	HCB-9			ASME XI Class: 3		
SUS:	049-02			Category: D-B		
Notes:	N/A			Code Items: D2.30 D2.40 D2.70 D2.80		

Pressure Test Zone		Scheduled Period For Test Type 1	2	3	Zone Description	Boundary Definition for Exam by VT-2	System Statistcs
DH14		L	L	LB	**RCS TO DHP SUCTION (NORMAL)**	DH11 TO DH12, DH20 (INCLUDING DH24, DH49)	DESIGN TEMP (°F) : 650 DESIGN PRESS (PSIG) 2500 PSV PSIG ASME XI HYDRO (PSIG) 2371
Drawing(s):	M-033B						
Line No.:	CCA-4				ASME XI Class: 1		
SUS:	049-02				Category: B-P		
Notes:	13, 14				Code Items: B15.50 B15.70		
DH15		L	L	LB	**RCS TO DHP SUCTION (BYPASS)**	DH21 TO DH23	DESIGN TEMP (°F) : 650 DESIGN PRESS (PSIG) 2500 PSV PSIG ASME XI HYDRO (PSIG) 2371
Drawing(s):	M-033B						
Line No.:	CCA-4				ASME XI Class: 1		
SUS:	049-02				Category: B-P		
Notes:	4				Code Items: B15.50 B15.70		
DH16		L	L	LB	**PRESSURIZER SPRAY LINE**	DH2735 TO RC51 (INCLUDING DH159)	DESIGN TEMP (°F) : 650 DESIGN PRESS (PSIG) 2500 PSV PSIG 2500 ASME XI HYDRO (PSIG) 2200
Drawing(s):	M-030A M-033B						
Line No.:	CCA-7				ASME XI Class: 1		
SUS:	049-02				Category: B-P		
Notes:	4				Code Items: B15.50 B15.70		
DH17		L	L	L	**GUARD PIPE FOR DH9A, ECCS #2 SUCTION LINE**	DH153, TELL-TAIL DRAIN FOR GUARD PIPE AROUND DH9A	DESIGN TEMP (°F) : 300 DESIGN PRESS (PSIG) 38 PSV PSIG 40 ASME XI HYDRO (PSIG) 40
Drawing(s):	M-033A						
Line No.:	HCB-1				ASME XI Class: 2		
SUS:	049-02				Category: C-H		
Notes:	10				Code Items: C7.30 C7.70		
DH18		L	L	L	**GUARD PIPE FOR DH9B, ECCS #1 SUCTION LINE**	DH152, TELL-TAIL DRAIN FOR GUARD PIPE AROUND DH9B	DESIGN TEMP (°F) : 300 DESIGN PRESS (PSIG) 38 PSV PSIG 40 ASME XI HYDRO (PSIG) 40
Drawing(s):	M-033B						
Line No.:	HCB-1				ASME XI Class: 2		
SUS:	049-02				Category: C-H		
Notes:	10				Code Items: C7.30 C7.70		

Pressure Test Zone		Scheduled Period For Test Type 1	2	3	Zone Description	Boundary Definition for Exam by VT-2	System Statistcs
DO01		FL	FL	FL	**EMER DIESEL GENERATOR F.O. STRG TK 1-1 TRANSFER LINE**	BUIRED TRANSFER LINE FROM T153-1 TO DO83	DESIGN TEMP (°F) : 100 DESIGN PRESS (PSIG) 20 PSV PSIG ASME XI HYDRO (PSIG) 35
Drawing(s):	M-017A						
Line No.:	HBC-86				ASME XI Class: 3		
SUS:	026-02				Category: D-B		
Notes:	9, 15				Code Items: D2.30 D2.40 D2.70 D2.80		
DO02		FL	FL	FL	**EMER DIESEL GENERATOR F.O. STRG TK 1-1 DISCHARGE ELBOW**	T153-1 TRANSFER PUMP DISCHARGE ELBOW FLANGE (BURIED)	DESIGN TEMP (°F) : 100 DESIGN PRESS (PSIG) 20 PSV PSIG 0 ASME XI HYDRO (PSIG) 35
Drawing(s):	M-017A						
Line No.:	HBC-86				ASME XI Class: 3		
SUS:	026-02				Category: D-B		
Notes:	9, 15				Code Items: D2.30 D2.40 D2.70 D2.80		
DO03		--	--	--	**EMER DIESEL GENERATOR F.O. STRG TK 1-1**	T153-1 TO DO81, AND OTHER APPURTENANCES	DESIGN TEMP (°F) : DESIGN PRESS (PSIG) 0 PSV PSIG 0 ASME XI HYDRO (PSIG) 0
Drawing(s):	M-017A						
Line No.:	HBC-87, HBC-88				ASME XI Class: 3		
SUS:	026-02				Category: D-B		
Notes:	7, 9, 16				Code Items: D2.10 D2.20 D2.30 D2.40 D2.50 D2.60 D2.70		
DO04		L	L	H	**EMER DIESEL GENERATOR DAY TANK 1-1 TO EMER DIESEL GENERATOR 1-1**	T46-1 TO DO83, DO21, DO55, OTHER APPURTENANCES DO100, K5-1 SKID, AND HBC-63 RETURN FROM K5-1 (INCLUDING DO49, DO40, DO41)	DESIGN TEMP (°F) : 100 DESIGN PRESS (PSIG) 20 PSV PSIG 0 ASME XI HYDRO (PSIG) 0
Drawing(s):	M-017A						
Line No.:	HBC-53, HBC-54, HBC-86, HBC-63				ASME XI Class: 3		
SUS:	026-02				Category: D-B		
Notes:	9, 17				Code Items: D2.10 D2.20 D2.30 D2.40 D2.70 D2.80		
DO05		FL	FL	FL	**EMER DIESEL GENERATOR F.O. STRG TK 1-2 TRANSFER LINE**	BUIRED TRANSFER LINE FROM T153-2 TO DO84	DESIGN TEMP (°F) : 100 DESIGN PRESS (PSIG) 20 PSV PSIG 0 ASME XI HYDRO (PSIG) 35
Drawing(s):	M-017A						
Line No.:	HBC-86				ASME XI Class: 3		
SUS:	026-02				Category: D-B		
Notes:	9, 15				Code Items: D2.30 D2.40 D2.70 D2.80		

Pressure Test Zone		Scheduled Period For Test Type 1	2	3	Zone Description	Boundary Definition for Exam by VT-2	System Statistcs
DO06		FL	FL	FL	**EMER DIESEL GENERATOR F.O. STRG TK 1-2 DISCHARGE ELBOW**	T153-2 TRANSFER PUMP DISCHARGE ELBOW FLANGE (BURIED)	DESIGN TEMP (°F) : DESIGN PRESS (PSIG) 0 PSV PSIG 0 ASME XI HYDRO (PSIG) 35
Drawing(s):	M-017A						
Line No.:	HBC-86				ASME XI Class: 3		
SUS:	026-02				Category: D-B		
Notes:	15				Code Items: D2.30 D2.40 D2.70 D2.80		
DO07		--	--	--	**EMER DIESEL GENERATOR F.O. STRG TK 1-2**	T153-2 TO DO82, AND OTHER APPURTENANCES	DESIGN TEMP (°F) : 100 DESIGN PRESS (PSIG) 0 PSV PSIG 0 ASME XI HYDRO (PSIG) 0
Drawing(s):	M-017A						
Line No.:	HBC-87, HBC-88				ASME XI Class: 3		
SUS:	026-02				Category: D-B		
Notes:	7, 9, 16				Code Items: D2.30 D2.40 D2.50 D2.60 D2.70 D2.80 D2.10		
DO08		L	L	H	**EMER DIESEL GENERATOR DAY TANK 1-2 TO EMER DIESEL GENERATOR 1-2**	T46-2 TO DO84, DO22, DO54, OTHER APPURTENANCES DO101, SKID K5-2, AND HBC-53 RETURN FROM K5-2 (INCLUDING DO53, DO57, DO58)	DESIGN TEMP (°F) : 110 DESIGN PRESS (PSIG) 15 PSV PSIG ASME XI HYDRO (PSIG) 0
Drawing(s):	M-017A						
Line No.:	HBC-53, HBC-54, HBC-86, HBC-63				ASME XI Class: 3		
SUS:	026-02				Category: D-B		
Notes:	9, 17				Code Items: D2.10 D2.20 D2.30 D2.40 D2.70 D2.80		
DR01		L	L	L	**STATION DRAINAGE (CTMT P13)**	DR2012A TO DR2012B, DR2012 (CTMT P13)	DESIGN TEMP (°F) : 210 DESIGN PRESS (PSIG) 40 PSV PSIG ASME XI HYDRO (PSIG) 50
Drawing(s):	M-046						
Line No.:	HBB-2				ASME XI Class: 2		
SUS:	020-10				Category: C-H		
Notes:	1, 3				Code Items: C7.30 C7.70		
DW01		L	L	L	**DEMINERALIZED WATER SUPPLY TO CTMT (CTMT P21)**	DW6831B TO DW6831A (CTMT P21)	DESIGN TEMP (°F) : 150 DESIGN PRESS (PSIG) 150 PSV PSIG ASME XI HYDRO (PSIG) 165
Drawing(s):	M-010C						
Line No.:	HCB-23				ASME XI Class: 2		
SUS:	037-02				Category: C-H		
Notes:	1				Code Items: C7.30 C7.70 C7.70		

Pressure Test Zone	Scheduled Period For Test Type 1	2	3	Zone Description	Boundary Definition for Exam by VT-2	System Statistcs
HP01	L	L	L	**HPI PUMP 1-1 SUCTION**	HP10 TO HP24, DH64, MU6405, HP1510*, HP14, HP20, HP39 (INCLUDING P58-1 AND HP12, HP22, HP32, ROHP6B)	DESIGN TEMP (°F) : 350 DESIGN PRESS (PSIG) 450 PSV PSIG 450 ASME XI HYDRO (PSIG) 563
Drawing(s):	M-033A M-033B M-031C					
Line No.:	GCB-4, GCB-2, GCB-11, CCB-2, CCB-11, CCB-12			ASME XI Class: 2		
SUS:	052-01			Category: C-H		
Notes:	N/A			Code Items: C7.30 C7.50 C7.70		
HP02	L	L	L	**HPI PUMP 1-1 RETURN TO BWST**	HP39 TO BW26 AND BWST (T10) (INCLUDING FEHP4B)	DESIGN TEMP (°F) : DESIGN PRESS (PSIG) PSV PSIG ASME XI HYDRO (PSIG)
Drawing(s):	M-033A					
Line No.:	HCC-21			ASME XI Class: 2		
SUS:	052-01			Category: C-H		
Notes:	N/A			Code Items: C7.10 C7.30 C7.70		
HP03	L	L	L	**HPI PUMP 1-1 DISCHARGE**	HP24 TO HP26, HP2C, HP2D (INCLUDING FEHP3C, FEHP3D)	DESIGN TEMP (°F) : 200 DESIGN PRESS (PSIG) 2600 PSV PSIG ASME XI HYDRO (PSIG) 2860
Drawing(s):	M-033A					
Line No.:	CCB-2, CCB-18			ASME XI Class: 2		
SUS:	052-01			Category: C-H		
Notes:	N/A			Code Items: C7.30 C7.70		
HP04	L	L	L	**HPI PUMP 1-1 AND MU INJ TO RCS (CTMT P50)**	HP2C TO MU6421, HP48 (INCLUDING MU800), (CTMT P50)	DESIGN TEMP (°F) : 650 DESIGN PRESS (PSIG) 2500 PSV PSIG ASME XI HYDRO (PSIG) 3125
Drawing(s):	M-033A M-031C					
Line No.:	CCB-2, CCB-3			ASME XI Class: 2		
SUS:	052-01			Category: C-H		
Notes:	N/A			Code Items: C7.30 C7.70		
HP05	L	L	L	**HPI PUMP 1-1 INJ TO RCS (CTMT P22)**	HP2D TO HP49, (CTMT P22)	DESIGN TEMP (°F) : 650 DESIGN PRESS (PSIG) 2500 PSV PSIG ASME XI HYDRO (PSIG) 3125
Drawing(s):	M-033A					
Line No.:	CCB-2			ASME XI Class: 2		
SUS:	052-01			Category: C-H		
Notes:	N/A			Code Items: C7.30 C7.70		

Pressure Test Zone	Scheduled Period For Test Type 1	2	3	Zone Description	Boundary Definition for Exam by VT-2	System Statistcs
HP06	L	L	L	**HPI PUMP 1-2 SUCTION**	HP11 TO HP25, DH63, MU3971, HP1511*, HP1556, HP35, HP15, HP21 (INCLUDING HP13, HP23, HP31, ROHP6A AND P58-2)	DESIGN TEMP (°F) : 350 DESIGN PRESS (PSIG) 450 PSV PSIG 450 ASME XI HYDRO (PSIG) 563
Drawing(s):	M-033A M-033B M-031C					
Line No.:	GCB-4, GCB-2, GCB-11, CCB-2, CCB-11, CCB-12			ASME XI Class: 2		
SUS:	052-01			Category: C-H		
Notes:	N/A			Code Items: C7.30 C7.50 C7.70		
HP07	L	L	L	**HPI PUMP 1-2 RETURN TO BWST**	HP35 TO SS159, BWST (INCLUDING HP33, FEHP4)	DESIGN TEMP (°F) : DESIGN PRESS (PSIG) PSV PSIG ASME XI HYDRO (PSIG)
Drawing(s):	M-033A					
Line No.:	HCC-91			ASME XI Class: 2		
SUS:	052-01			Category: C-H		
Notes:	N/A			Code Items: C7.30 C7.70		
HP08	L	L	L	**HPI PUMP 1-2 DISCHARGE**	HP25 TO HP27, HP2A, HP2B, DH2736, DH200 (INCLUDING FEHP3B, FEHP3A, HP209, HP210, DH100, DH100A, DH202, DH202A, DH201, FE4999, DH4999B, DH4999A, DH4999F, DH4999E)	DESIGN TEMP (°F) : 200 DESIGN PRESS (PSIG) 2600 PSV PSIG ASME XI HYDRO (PSIG) 2860
Drawing(s):	M-033A					
Line No.:	CCB-2			ASME XI Class: 2		
SUS:	052-01			Category: C-H		
Notes:	N/A			Code Items: C7.30 C7.70		
HP09	L	L	L	**HPI PUMP 1-2 INJ TO RCS (CTMT P19)**	HP2A TO HP57, (CTMT P19)	DESIGN TEMP (°F) : 650 DESIGN PRESS (PSIG) 2500 PSV PSIG ASME XI HYDRO (PSIG) 3125
Drawing(s):	M-033A					
Line No.:	CCB-2			ASME XI Class: 2		
SUS:	052-01			Category: C-H		
Notes:	N/A			Code Items: C7.30 C7.70		
HP10	L	L	L	**HPI PUMP 1-2 AND MU INJ TO RCS (CTMT P20)**	HP2B TO HP56, MU6422 (INCLUDING MU169), (CTMT P20)	DESIGN TEMP (°F) : 650 DESIGN PRESS (PSIG) 2500 PSV PSIG ASME XI HYDRO (PSIG) 3125
Drawing(s):	M-033A M-031C					
Line No.:	CCB-2, CCB-3			ASME XI Class: 2		
SUS:	052-01			Category: C-H		
Notes:	N/A			Code Items: C7.30 C7.70		

Pressure Test Zone		Scheduled Period For Test Type 1	2	3	Zone Description	Boundary Definition for Exam by VT-2	System Statistcs
IA01		L	L	L	**INSTRUMENT AIR (CTMT P43A)**	IA2011 TO IA501, (CTMT P43A)	DESIGN TEMP (°F) : 150 DESIGN PRESS (PSIG) 150 PSV PSIG ASME XI HYDRO (PSIG) 165
Drawing(s):	M-015A						
Line No.:	HBB-10				ASME XI Class: 2		
SUS:	018-01				Category: C-H		
Notes:	1, 2				Code Items: C7.30 C7.70		
MS01		L	L	H	**MS LINES OUTSIDE SHIELD BLDG (TRAIN 1)**	MS101 TO MS101-1, MS920, MS921, MS922, MS923, MS394, ICS11B, SP17B2, SP17B1, SP17B7, SP17B6, SP17B5, SP17B4, SP17B3, SP17B9, SP17B8, SHIELDBLDG, MS106, MS727, MS728, MS5889B (INCLUDING MS703, MS875, TW614, MS107A, MS735) AND TO THE INLET AND BYPASS VALVES OF STEAM TRAPS ST39,ST132, ST131, ST137, ST134. ALSO SEPARATE LINES FROM SHIELD BLDG TO SS607 (INCLUDING SS88), AF608, FW612, (INCLUDING MS743), MS611.	DESIGN TEMP (°F) : DESIGN PRESS (PSIG) 1050 PSV PSIG 1050 ASME XI HYDRO (PSIG) 1313
Drawing(s):	M-007B M-003C M-003A M-007A						
Line No.:	EBB-2, EBD-19, EBB-1, EBB-3, EBB-4, EBB-5				ASME XI Class: 2 3 D-B		
SUS:	083-01				Category: C-H		
Notes:	N/A				Code Items: C7.30 C7.50 C7.70 D2.30 D2.70 D2.80		
MS02		L	L	L	**OTSG 1-1 AND MS LINES INSIDE SHIELD BLDG (TRAIN1)**	OTSG 1-1 (E24-1) TO MS857, NN70, SHIELD BLDG FOR PENETRATIONS P40, P2, P38, P36, P60, (INCLUDING MS859, MS860, MS861, MS862, SS84, SS86, SS87,SS85, MS863, MS864, MS865, MS866, TW966, TW969, TWSP8B1, TWSP10B1, TWSP10B2, 4-INCH CHEMICAL CLEANING CONNECTION.)	DESIGN TEMP (°F) : DESIGN PRESS (PSIG) 1050 PSV PSIG 1050 ASME XI HYDRO (PSIG) 1313
Drawing(s):	M-007A						
Line No.:	EBB-1, EBB-3, EBB-4, EBB-5				ASME XI Class: 2		
SUS:	083-01				Category: C-H		
Notes:	N/A				Code Items: C7.10 C7.30 C7.70		
MS03		L	L	H	**MS LINE 1 TO AFW 1-2**	MS107 TO MS727, AND MS5889B TO ICS38D (INCLUDING MS31, TW2562), AND TO THE INLET AND BYPASS VALVE OF STEAM TRAP ST151.	DESIGN TEMP (°F) : DESIGN PRESS (PSIG) 1050 PSV PSIG 1050 ASME XI HYDRO (PSIG) 1313
Drawing(s):	M-003C						
Line No.:	EBD-19				ASME XI Class: 3		
SUS:	083-01				Category: D-B		
Notes:	N/A				Code Items: D2.30 D2.40 D2.70 D2.80		
MS04		L	L	H	**MS LINES OUTSIDE SHIELD BLDG (TRAIN 2)**	MS100 TO MS100-1, MS914, MS918, MS915, MS919, MS375, ICS11A, SP17A2, SP17A1, SP17A7, SP17A6, SP17A5, SP17A4, SP17A3, SP17A9, SP17A8, SHIELDBLDG, MS107, MS726, AS274, MS733, MS5889A, (INCLUDING MS700, MS876, TW613, MS106A, MS734), AND TO THE INLET AND BYPASS VALVES FOR STEAM TRAPSST125, ST121, ST139, ST90, ST138, ST133. ALSO SEPARATE LINES FROM SHIELD BLDG TO SS598 (INCLUDING SS83), AF599, FW601 (INCLUDING MS741),MS603.	DESIGN TEMP (°F) : DESIGN PRESS (PSIG) 1050 PSV PSIG 1050 ASME XI HYDRO (PSIG) 1313
Drawing(s):	M-007B M-003C M-003A M-007A						
Line No.:	EBB-2, EBD-19, EBB-1, EBB-3, EBB-4, EBB-5				ASME XI Class: 2 3 D-B		
SUS:	083-01				Category: C-H		
Notes:	N/A				Code Items: C7.30 C7.50 C7.70 D2.30 D2.70 D2.80		

Pressure Test Zone	Scheduled Period For Test Type 1	2	3	Zone Description	Boundary Definition for Exam by VT-2	System Statistcs
MS05 Drawing(s): M-007A Line No.: EBB-1, EBB-3, EBB-4, EBB-5 SUS: 083-01 Notes: N/A	L	L	L	**OTSG 1-2 AND MS LINES INSIDE SHIELD BLDG (TRAIN 2)** ASME XI Class: 2 Category: C-H Code Items: C7.10 C7.30 C7.70	OTSG 1-2 (E24-2) TO MS881, NN72, SHIELD BLDG FOR PENETRATIONS P39, P18, P37, P57, P35, (INCLUDING MS883, MS884, MS885, MS886, SS79, SS81, SS82,SS80, MS887, MS888, MS889, MS890, TW605, TW596, TWSP8A1, TWSP10A1, TWSP10A2, 4-INCH SG CHEMICAL CLEANING CONNECTION).	DESIGN TEMP (°F) : DESIGN PRESS (PSIG) 1050 PSV PSIG 1050 ASME XI HYDRO (PSIG) 1313
MS06 Drawing(s): M-003C Line No.: EBD-19 SUS: 083-01 Notes: N/A	L	L	H	**MS LINE 2 TO AFW 1-1** ASME XI Class: 3 Category: D-B Code Items: D2.30 D2.40 D2.70 D2.80	MS106 TO MS726, AND MS5889A TO ICS38C (INCLUDING MS123, TW2560), AND TO THE INLET AND BYPASS VALVE OF STEAM TRAP ST149.	DESIGN TEMP (°F) : DESIGN PRESS (PSIG) 1050 PSV PSIG 1050 ASME XI HYDRO (PSIG) 1313
MS07 Drawing(s): M-007A Line No.: HCB-43 SUS: 083-01 Notes: 1, 2	L	L	L	**SG CHEM CLEANING (CTMT P59)** ASME XI Class: 2 Category: C-H Code Items: C7.30 C7.70	8"-HCB-43 OUTSIDE FLG TO INSIDE FLG ON CTMT P59	DESIGN TEMP (°F) : 120 DESIGN PRESS (PSIG) 45 PSV PSIG ASME XI HYDRO (PSIG) 50
MS08 Drawing(s): M-003C Line No.: HBC-91 SUS: 083-01 Notes: 18	FL	FL	FL	**AFPT 1-1 EXHAUST LINE TO ATMOS** ASME XI Class: 3 Category: D-B Code Items: D2.30 D2.40 D2.50 D2.60 D2.70 D2.80	AFPT 1-1 (K3-1) TO ICS38C, MS3691*, MS750, MS748, MS53, MS54, ATMOS. (INCLUDING TW2549)	DESIGN TEMP (°F) : 285 DESIGN PRESS (PSIG) 50 PSV PSIG 30 ASME XI HYDRO (PSIG)
MS09 Drawing(s): M-003C Line No.: HBC-91 SUS: 083-01 Notes: 18	FL	FL	FL	**AFPT 1-2 EXHAUST LINE TO ATMOS** ASME XI Class: 3 Category: D-B Code Items: D2.30 D2.40 D2.50 D2.60 D2.70 D2.80	AFPT 1-2 (K3-2) TO ICS38D, MS3692*, MS751, MS749, MS51, MS52, ATMOS. (INCLUDING TW2559)	DESIGN TEMP (°F) : 285 DESIGN PRESS (PSIG) 50 PSV PSIG 30 ASME XI HYDRO (PSIG)

Pressure Test Zone	Scheduled Period For Test Type 1	2	3	Zone Description	Boundary Definition for Exam by VT-2	System Statistcs
MU01 Drawing(s): M-031A Line No.: CCB-21 SUS: 065-01 Notes: 1	L	L	L	**MAKEUP (CTMT P14) FROM LETDOWN COOLERS** ASME XI Class: 2 Category: C-H Code Items: C7.30 C7.70	MU2A TO MU3, (CTMT P14)	DESIGN TEMP (°F) : 600 DESIGN PRESS (PSIG) 2500 PSV PSIG ASME XI HYDRO (PSIG) 3125
MU02 Drawing(s): M-031B Line No.: CCB-14 SUS: 065-01 Notes: 1	L	L	L	**MAKEUP (CTMT P54) FROM SEAL INJ FILTERS TO RCP 1-1** ASME XI Class: 2 Category: C-H Code Items: C7.30 C7.70	MU66C TO MU244, (CTMT P54)	DESIGN TEMP (°F) : 200 DESIGN PRESS (PSIG) 3050 PSV PSIG ASME XI HYDRO (PSIG) 3355
MU03 Drawing(s): M-031B Line No.: CCB-14 SUS: 065-01 Notes: 1	L	L	L	**MAKEUP (CTMT P55) FROM SEAL INJ FILTERS TO RCP 1-2** ASME XI Class: 2 Category: C-H Code Items: C7.30 C7.70	MU66D TO MU245, (CTMT P55)	DESIGN TEMP (°F) : 200 DESIGN PRESS (PSIG) 3050 PSV PSIG ASME XI HYDRO (PSIG) 3355
MU04 Drawing(s): M-031B Line No.: CCB-14 SUS: 065-01 Notes: 1	L	L	L	**MAKEUP (CTMT P52) FROM SEAL INJ FILTERS TO RCP 2-1** ASME XI Class: 2 Category: C-H Code Items: C7.30 C7.70	MU66A TO MU242, (CTMT P52)	DESIGN TEMP (°F) : 200 DESIGN PRESS (PSIG) 3050 PSV PSIG ASME XI HYDRO (PSIG) 3355
MU05 Drawing(s): M-031B Line No.: CCB-14 SUS: 065-01 Notes: 1	L	L	L	**MAKEUP (CTMT P53) FROM SEAL INJ FILTERS TO RCP 2-2** ASME XI Class: 2 Category: C-H Code Items: C7.30 C7.70	MU66B TO MU243, (CTMT P53)	DESIGN TEMP (°F) : 200 DESIGN PRESS (PSIG) 3050 PSV PSIG ASME XI HYDRO (PSIG) 3355

Pressure Test Zone		Scheduled Period For Test Type 1	2	3	Zone Description	Boundary Definition for Exam by VT-2	System Statistcs
MU06		L	L	L	**MAKEUP (CTMT P56) FROM RCP SEAL CLG TO MAKEUP**	MU59A TO MU59B, MU59C, MU59D, MU38, (INCLUDING MU256, MU260, MU257, MU261, MU254, MU258, MU255, MU259, MU263, MU262, MU264, MU265, FEMU60A, FEMU60B,FEMU60C, FEMU60D) (CTMT P56)	DESIGN TEMP (°F) : 300 DESIGN PRESS (PSIG) 2500 PSV PSIG ASME XI HYDRO (PSIG) 3125
Drawing(s):	M-031B						
Line No.:	CCB-20				ASME XI Class: 2		
SUS:	065-01				Category: C-H		
Notes:	1				Code Items: C7.30 C7.70		
NN01		L	L	L	**NITROGEN SUPPLY (CTMT P44B)**	NN236 TO NN58, (CTMT P44B)	DESIGN TEMP (°F) : 200 DESIGN PRESS (PSIG) 150 PSV PSIG ASME XI HYDRO (PSIG) 165
Drawing(s):	M-019						
Line No.:	HBB-14				ASME XI Class: 2		
SUS:	074-01				Category: C-H		
Notes:	1, 2				Code Items: C7.30 C7.70		
RC01		L	L	LB	**PRIMARY REACTOR COOLANT SYSTEM CLASS 1 PIPE FOR LEAKAGE TEST**	REACTOR VESSEL (T1), RCP 1-1-1 (P36-1), RCP 1-1-2 (P36-2), RCP 1-2-1 (P36-3), RCP 1-2-2 (P36-4), OTSG 1-1 (E24-1), OTSG 1-2 (E24-2), PRESSURIZER (T2)TO VALVES RC5004, NN69, RC4608B, RC5001, NN68, RC4610B, RC56, RC2A, RC13B, RC13A, RC200, NN64, RC240A, RC51, RC29, RC31, RC35, RC217A, DH20, DH12,DH21, RC39, RC37, RC41, MU1A, MU1B, HP57, HP56, HP48, HP49, RC221, RC214B, RC774, CF30, CF31, (INCLUDING HP59, HP58, HP50, HP51, MU2B, MU72,MU64, MU73, RC36, RC38, RC40, RC214A, RC42, RC43, RC5003, RC4608A, RC217, RC34, RC48, RC262, RC49, RC2, RC50, RC10, RC11, RC55, RC239A, RC170A,RC170, RC4632, RC260, RC33, RC32, RC30, RC239B, RC45, RC5000, RC4610A, RC44, TWRC4B2, TWRC4B1, TWRC4B3, TWRC4B4, TWRC3B, TWRC3B1, TWRC3B3,TWRC3A, TWRC3A1, TWRC3A3, TWRC4A2, TWRC15, TWRC4A4, TWRC4A1, TWRC4A3, FERC1A, FERC1B, RO5890, RO4640	DESIGN TEMP (°F) : 650 DESIGN PRESS (PSIG) 2500 PSV PSIG 2500 ASME XI HYDRO (PSIG) 2200
Drawing(s):	M-030A M-033A M-033B M-040A M-031A						
Line No.:	CCA-6, CCA-2, CCA-23, CCA-20, CCA-19, CCA-18, CCA-4, CCA-7, CCA-8, CCA-11, CCA-22, CCA-10, CCA-13, CCA-14, CCA-21				ASME XI Class: 1		
SUS:	064-02				Category: B-P		
Notes:	4				Code Items: B15.10 B15.20 B15.30 B15.50 B15.60 B15.70		
RC02		O/L	O/L	O/L	**REACTOR VESSEL GASKET TEST LINE**	TELL-TAIL DRIN LINE FROM VESSEL TO RC46 AND RC47	DESIGN TEMP (°F) : 650 DESIGN PRESS (PSIG) 2500 PSV PSIG ASME XI HYDRO (PSIG)
Drawing(s):	M-030A						
Line No.:	CCA-3				ASME XI Class: 1		
SUS:	064-02				Category: B-P		
Notes:	19				Code Items: B15.50 B15.70		

Pressure Test Zone	Scheduled Period For Test Type 1	2	3	Zone Description	Boundary Definition for Exam by VT-2	System Statistcs
RC03	L	L	L	**SAMPLE FROM RCS, (CTMT P1)**	RC240B TO RC240A, (CTMT P1)	DESIGN TEMP (°F) : 670 DESIGN PRESS (PSIG) 2500 PSV PSIG ASME XI HYDRO (PSIG) 3125
Drawing(s): M-030A Line No.: CCB-17 SUS: 064-02 Notes: 1				ASME XI Class: 2 Category: C-H Code Items: C7.30 C7.70		
RC04	L	L	L	**FROM RCP SEAL CAVITIES TO GAS RADWASTE, (CTMT P16)**	RC1719A TO RC1719B, (CTMT P16)	DESIGN TEMP (°F) : 350 DESIGN PRESS (PSIG) 150 PSV PSIG ASME XI HYDRO (PSIG) 188
Drawing(s): M-040A Line No.: HCB-33 SUS: 064-02 Notes: 1, 2				ASME XI Class: 2 Category: C-H Code Items: C7.30 C7.70		
RC05	L	L	L	**PRESSURIZER QUENCH TANK TO CIRC PUMP (CTMT P48)**	RC229B TO RC229A, RC229C (CTMT P48)	DESIGN TEMP (°F) : 350 DESIGN PRESS (PSIG) 100 PSV PSIG ASME XI HYDRO (PSIG) 125
Drawing(s): M-040A Line No.: HCB-22 SUS: 064-02 Notes: 1, 20				ASME XI Class: 2 Category: C-H Code Items: C7.30 C7.70		
RC06	L	L	L	**QUENCH TANK PUMP TO QUENCH TANK, (CTMT P41)**	RC232 TO RC113, (CTMT P41)	DESIGN TEMP (°F) : 350 DESIGN PRESS (PSIG) 100 PSV PSIG ASME XI HYDRO (PSIG) 125
Drawing(s): M-040A Line No.: HCB-7 SUS: 064-02 Notes: 1				ASME XI Class: 2 Category: C-H Code Items: C7.30 C7.70		
RC07	L	L	L	**DRAINS TO RC DRAIN TANK, (CTMT P32)**	RC1773B TO RC1773A, (CTMT P32)	DESIGN TEMP (°F) : 300 DESIGN PRESS (PSIG) 165 PSV PSIG ASME XI HYDRO (PSIG) 207
Drawing(s): M-040A Line No.: HCB-32 SUS: 064-02 Notes: 1, 20				ASME XI Class: 2 Category: C-H Code Items: C7.30 C7.70		

Pressure Test Zone		Scheduled Period For Test Type 1	2	3	Zone Description	Boundary Definition for Exam by VT-2	System Statistcs
RC08		L	L	L	**VAPOR SPACE OF QUENCH TANK TO SAMPLE SYSTEM, (CTMT P68A)**	SS235A TO SS235B, (CTMT P68A)	DESIGN TEMP (°F) : 350 DESIGN PRESS (PSIG) 100 PSV PSIG ASME XI HYDRO (PSIG) 125
Drawing(s):	M-040A						
Line No.:	HCB-26				ASME XI Class: 2		
SUS:	064-02				Category: C-H		
Notes:	1, 2				Code Items: C7.30 C7.70		
RC09		O/L	O/L	O/L	**RCP 1-1-1 GASKET DRAIN**	RCP 1-1-1 GASKET TO RC304	DESIGN TEMP (°F) : 650 DESIGN PRESS (PSIG) 2500 PSV PSIG ASME XI HYDRO (PSIG)
Drawing(s):	M-040D						
Line No.:	CCB-22				ASME XI Class: 2		
SUS:	064-02				Category: C-H		
Notes:	19				Code Items: C7.30 C7.70		
RC10		O/L	O/L	O/L	**RCP 1-1-2 GASKET DRAIN**	RCP 1-1-2 GASKET TO RC404	DESIGN TEMP (°F) : 650 DESIGN PRESS (PSIG) 2500 PSV PSIG ASME XI HYDRO (PSIG)
Drawing(s):	M-040D						
Line No.:	CCB-22				ASME XI Class: 2		
SUS:	064-02				Category: C-H		
Notes:	19				Code Items: C7.30 C7.70		
RC11		O/L	O/L	O/L	**RCP 1-2-1 GASKET DRAIN**	RCP 1-2-1 GASKET TO RC504	DESIGN TEMP (°F) : 650 DESIGN PRESS (PSIG) 2500 PSV PSIG ASME XI HYDRO (PSIG)
Drawing(s):	M-040D						
Line No.:	CCB-22				ASME XI Class: 2		
SUS:	064-02				Category: C-H		
Notes:	19				Code Items: C7.30 C7.70		
RC12		O/L	O/L	O/L	**RCP 1-2-2 GASKET DRAIN**	RCP 1-2-2 GASKET TO RC604	DESIGN TEMP (°F) : 650 DESIGN PRESS (PSIG) 2500 PSV PSIG ASME XI HYDRO (PSIG)
Drawing(s):	M-040D						
Line No.:	CCB-22				ASME XI Class: 2		
SUS:	064-02				Category: C-H		
Notes:	19				Code Items: C7.30 C7.70		

Pressure Test Zone		Scheduled Period For Test Type 1	2	3	Zone Description	Boundary Definition for Exam by VT-2	System Statistcs
SA01		L	L	L	**STATION AIR (CTMT P42A)**	SA2010 TO SA502, (CTMT P42A)	DESIGN TEMP (°F) : 150 DESIGN PRESS (PSIG) 150 PSV PSIG ASME XI HYDRO (PSIG) 165
Drawing(s):	M-015D						
Line No.:	HBB-9				ASME XI Class: 2		
SUS:	018-01				Category: C-H		
Notes:	1, 2				Code Items: C7.30 C7.70		
SF01		L	L	L	**FUEL TRANSFER TUBE 1-1 (CTMT P23)**	SF2 THRU FUEL TRANSFER TUBE 1-1 TO FLG (CTMT P24)	DESIGN TEMP (°F) : 120 DESIGN PRESS (PSIG) 40 PSV PSIG ASME XI HYDRO (PSIG) 44
Drawing(s):	M-035						
Line No.:	HCB-50, HCB-48				ASME XI Class: 2		
SUS:	067-02				Category: C-H		
Notes:	1, 3				Code Items: C7.30 C7.70		
SF02		L	L	L	**FUEL TRANSFER TUBE 1-2 (CTMT P24)**	SF1 THRU FUEL TRANSFER TUBE 1-2 TO FLG (CTMT P23)	DESIGN TEMP (°F) : 120 DESIGN PRESS (PSIG) 40 PSV PSIG ASME XI HYDRO (PSIG) 44
Drawing(s):	M-035						
Line No.:	HCB-50, HCB-48				ASME XI Class: 2		
SUS:	067-02				Category: C-H		
Notes:	1, 3				Code Items: C7.30 C7.70		
SF03		L	L	H	**SFP TO DH SYSTEM & SUCTION OF SFP PUMPS**	SF3 TO SF4, SF6, DH30, DH31 (INCLUDING SF115)	DESIGN TEMP (°F) : 200 DESIGN PRESS (PSIG) 75 PSV PSIG ASME XI HYDRO (PSIG) 83
Drawing(s):	M-035 M-033B M-033C						
Line No.:	HCB-5, HCB-25, HCB-24				ASME XI Class: 3		
SUS:	067-01				Category: D-B		
Notes:	N/A				Code Items: D2.30 D2.40 D2.70 D2.80		
SF04		L	L	L	**OPEN-ENDED FROM SFP TO SFP PUMP SUCTION LINE**	10"-HCB-6 FROM SF3 TO SFP	DESIGN TEMP (°F) : 200 DESIGN PRESS (PSIG) 75 PSV PSIG ASME XI HYDRO (PSIG)
Drawing(s):	M-035						
Line No.:	HCB-6				ASME XI Class: 3		
SUS:	070-01				Category: D-B		
Notes:	18				Code Items: D2.30 D2.40 D2.70 D2.80		

Pressure Test Zone		Scheduled Period For Test Type 1	2	3	Zone Description	Boundary Definition for Exam by VT-2	System Statistcs
SF05		L	L	L	**OPEN-ENDED SFP DRAIN PIPE SUMP TO SUCTION SFP PUMP LINE**	4"-HCC-29 FROM SF4 TO SFP	DESIGN TEMP (°F) : 200 DESIGN PRESS (PSIG) 15 PSV PSIG ASME XI HYDRO (PSIG)
Drawing(s):	M-035						
Line No.:	HCC-29				ASME XI Class: 3		
SUS:	070-01				Category: D-B		
Notes:	18				Code Items: D2.30 D2.40 D2.70 D2.80		
SF06		L	L	L	**SFP RETURN LINE, OPEN-ENDED**	DH69 TO SF47 TO SFP	DESIGN TEMP (°F) : 200 DESIGN PRESS (PSIG) 27 PSV PSIG ASME XI HYDRO (PSIG)
Drawing(s):	M-033A M-035						
Line No.:	HCB-9, HCB-10				ASME XI Class: 3		
SUS:	070-01				Category: D-B		
Notes:	18				Code Items: D2.30 D2.40 D2.70 D2.80		
SW01		L	L	H	**SWP 1-1 DISCHARGE**	P3-1 TO SW1379, SW17 (INCLUDING F15-1)	DESIGN TEMP (°F) : 140 DESIGN PRESS (PSIG) 150 PSV PSIG ASME XI HYDRO (PSIG) 90
Drawing(s):	M-041A						
Line No.:	HBC-34				ASME XI Class: 3		
SUS:	011-01				Category: D-B		
Notes:	N/A				Code Items: D2.30 D2.40 D2.50 D2.60 D2.70 D2.80		
SW02		H	L	L	**SERVICE WATER TRAIN 1**	SW17 TO SW23, SW3962, SW1399, SW14, SW30, SW34, SW6391 (INCLUDING SW20, TW1500)	DESIGN TEMP (°F) : 140 DESIGN PRESS (PSIG) 150 PSV PSIG 129 ASME XI HYDRO (PSIG) 142
Drawing(s):	M-041A M-041B						
Line No.:	HBC-34, HBC-43				ASME XI Class: 3		
SUS:	011-01				Category: D-B		
Notes:	N/A				Code Items: D2.30 D2.40 D2.70 D2.80		
SW03		H	L	L	**SERVICE WATER TO CCW H/X 1-1**	SW34 TO SW36 (INCLUDING TW2066, TW1360, E22-1, SW1424)	DESIGN TEMP (°F) : 175 DESIGN PRESS (PSIG) 120 PSV PSIG ASME XI HYDRO (PSIG) 132
Drawing(s):	M-041B						
Line No.:	HBC-43, HBC-42, HBC-38				ASME XI Class: 3		
SUS:	011-01				Category: D-B		
Notes:	N/A				Code Items: D2.30 D2.40 D2.70 D2.80		

Pressure Test Zone	Scheduled Period For Test Type 1	2	3	Zone Description	Boundary Definition for Exam by VT-2	System Statistcs
SW04	H	L	L	**SW TRAIN 1 SUPPLY TO ECCS ROOM COOLER COILS**	SW14 TO SW60, SW234, SW137, SW86, SW94, SW102, SW110, SW118, SW371, SW243, SW383, SW1382, SW1366 (INCLUDING SW85, SW101, SW109, SW117, SW370,SW382, SW58, SW256, SW260, FE11104, FE11106, FE11109)	DESIGN TEMP (°F) : 175 DESIGN PRESS (PSIG) 150 PSV PSIG ASME XI HYDRO (PSIG) 165
Drawing(s):	M-041B M-041C					
Line No.:	HBC-34, HBC-42, HBC-35, HBC-44			ASME XI Class: 3		
SUS:	011-01			Category: D-B		
Notes:	N/A			Code Items: D2.30 D2.40 D2.70 D2.80		
SW05	H	L	L	**SW TO CONTROL RM EMER COND. UNIT 1-1**	SW137 TO SW135, SW223 (INCLUDING S33-1, TW4921, FE9809, SW5896, SW136, TW2924, SW2927)	DESIGN TEMP (°F) : 175 DESIGN PRESS (PSIG) 150 PSV PSIG ASME XI HYDRO (PSIG) 165
Drawing(s):	M-041B					
Line No.:	HBC-34, HBC-70			ASME XI Class: 3		
SUS:	011-01			Category: D-B		
Notes:	N/A			Code Items: D2.30 D2.40 D2.70 D2.80		
SW06	H	L	L	**SW TRAIN 1 RETURN**	SW135 TO SW43, SW36, SW39 (INCLUDING FE11210)	DESIGN TEMP (°F) : 175 DESIGN PRESS (PSIG) 150 PSV PSIG ASME XI HYDRO (PSIG) 165
Drawing(s):	M-041B					
Line No.:	HBC-70, HBC-42			ASME XI Class: 3		
SUS:	011-01			Category: D-B		
Notes:	N/A			Code Items: D2.30 D2.40 D2.70 D2.80		
SW07	L	L	L	**SW TO CAC 1-1**	SW1366 TO SW1356, (CTMT P5, P9) (INCLUDING SW64, SW65, SW66, SW67, SW1389, E37-1)	DESIGN TEMP (°F) : 264 DESIGN PRESS (PSIG) 150 PSV PSIG 150 ASME XI HYDRO (PSIG) 188
Drawing(s):	M-041C					
Line No.:	HBB-7, HBC-46, HBC-47, HBB-11			ASME XI Class: 2		
SUS:	011-01			Category: C-H		
Notes:	N/A			Code Items: C7.30 C7.70		
SW08	H	L	L	**SW SUPPLY TO AFW**	SW1382 TO SW5, SW9 (INCLUDING SW3, S202, SW7)	DESIGN TEMP (°F) : 140 DESIGN PRESS (PSIG) 150 PSV PSIG ASME XI HYDRO (PSIG) 165
Drawing(s):	M-006D M-041C					
Line No.:	HBD-22, HBC-139			ASME XI Class: 3		
SUS:	011-01			Category: D-B		
Notes:	N/A			Code Items: D2.30 D2.40 D2.70 D2.80		

Pressure Test Zone		Scheduled Period For Test Type 1	2	3	Zone Description	Boundary Definition for Exam by VT-2	System Statistcs
SW09		H	L	L	**SW FEED TO H2 DILUTION BLWR 1-1**	SW383 TO SW381, SW385, SW5067 (INCLUDING SW384)	DESIGN TEMP (°F) : 140 DESIGN PRESS (PSIG) 150 PSV PSIG ASME XI HYDRO (PSIG) 165
Drawing(s):	M-041C						
Line No.:	HBC-35				ASME XI Class: 3		
SUS:	011-01				Category: D-B		
Notes:	N/A				Code Items: D2.30 D2.40 D2.70 D2.80		
SW10		H	L	L	**SW TO H2 DILUTION BLOWER 1-1**	SW5067, SW385 TO SW334 (INCLUDING SW386, SW327)	DESIGN TEMP (°F) : 140 DESIGN PRESS (PSIG) 150 PSV PSIG ASME XI HYDRO (PSIG) 165
Drawing(s):	M-O41C M-029D						
Line No.:	HBC-35				ASME XI Class: 3		
SUS:	011-01				Category: D-B		
Notes:	N/A				Code Items: D2.30 D2.40 D2.70 D2.80		
SW11		L	L	H	**SWP 1-2 DISCHARGE**	P3-2 TO SW18, SW1380 (INCLUDING F15-2)	DESIGN TEMP (°F) : 140 DESIGN PRESS (PSIG) 150 PSV PSIG ASME XI HYDRO (PSIG) 90
Drawing(s):	M-041A						
Line No.:	HBC-34				ASME XI Class: 3		
SUS:	011-01				Category: D-B		
Notes:	N/A				Code Items: D2.30 D2.40 D2.50 D2.60 D2.70 D2.80		
SW12		H	L	L	**SW TRAIN 2**	SW18 TO SW3963, SW1395, SW32, SW35, SW15, SW25 (INCLUDING SW21, TW1501)	DESIGN TEMP (°F) : 140 DESIGN PRESS (PSIG) 150 PSV PSIG 129 ASME XI HYDRO (PSIG) 142
Drawing(s):	M-041A M-041B						
Line No.:	HBC-34, HBC-35, HBC-43				ASME XI Class: 3		
SUS:	011-01				Category: D-B		
Notes:	N/A				Code Items: D2.30 D2.40 D2.70 D2.80		
SW13		H	L	L	**SW TO CCW H/X 1-2**	SW35 TO SW38 (INCLUDING TW2193, E22-2, TW1361, SW1434)	DESIGN TEMP (°F) : 175 DESIGN PRESS (PSIG) 120 PSV PSIG ASME XI HYDRO (PSIG) 132
Drawing(s):	M-041B						
Line No.:	HBC-43, HBC-42, HBC-38				ASME XI Class: 3		
SUS:	011-01				Category: D-B		
Notes:	N/A				Code Items: D2.30 D2.40 D2.70 D2.80		

Pressure Test Zone	Scheduled Period For Test Type 1	2	3	Zone Description	Boundary Definition for Exam by VT-2	System Statistcs
SW14	H	L	L	**SW TRAIN 2 SUPPLY TO ECCS ROOM COOLER COILS**	SW15, SW84, SW133, SW92, SW100, SW108, SW116, SW373, SW236, SW1383, SW381, SW62, SW1367 (INCLUDING SW83, SW91, SW99, SW107, SW115, SW59,SW380, SW257, SW261, FE11105, FE11107, FE11108)	DESIGN TEMP (°F) : 175 DESIGN PRESS (PSIG) 150 PSV PSIG ASME XI HYDRO (PSIG) 165
Drawing(s):	M-041C M-036A M-041B					
Line No.:	HBC-34, HBC-35, HBC-70, HBC-42			ASME XI Class: 3		
SUS:	011-01			Category: D-B		
Notes:	N/A			Code Items: D2.30 D2.40 D2.70 D2.80		
SW15	H	L	L	**SW TO CONTROL RM EMER. COND. UNIT 1-2**	SW133 TO SW131, SW224 (INCLUDING TW4922, S33-2, FE9808, SW5897, SW132, SW2928, TW2909)	DESIGN TEMP (°F) : 175 DESIGN PRESS (PSIG) 150 PSV PSIG ASME XI HYDRO (PSIG) 165
Drawing(s):	M-041B					
Line No.:	HBC-34, HBC-70			ASME XI Class: 3		
SUS:	011-03			Category: D-B		
Notes:	N/A			Code Items: D2.30 D2.40 D2.70 D2.80		
SW16	H	L	L	**SW TRAIN 2 RETURN**	SW131 TO SW44, SW41, SW38 (INCLUDING SW130, FE11211)	DESIGN TEMP (°F) : 175 DESIGN PRESS (PSIG) 150 PSV PSIG ASME XI HYDRO (PSIG) 165
Drawing(s):	M-041B					
Line No.:	HBC-70, HBC-42			ASME XI Class: 3		
SUS:	011-03			Category: D-B		
Notes:	N/A			Code Items: D2.30 D2.40 D2.70 D2.80		
SW17	L	L	L	**SW TO CAC 1-2**	SW1367 TO SW1357, (CTMT P7, P11) (INCLUDING SW72, SW73, SW74, SW1390, SW75, E37-2)	DESIGN TEMP (°F) : 264 DESIGN PRESS (PSIG) 150 PSV PSIG 150 ASME XI HYDRO (PSIG) 188
Drawing(s):	M-041C					
Line No.:	HBB-7, HBC-46, HBC-47, HBB-11			ASME XI Class: 2		
SUS:	011-01			Category: C-H		
Notes:	N/A			Code Items: C7.30 C7.70		
SW18	H	L	L	**SW SUPPLY TO AFW**	SW1383 TO SW10, SW6 (INCLUDING SW4, S205, SW8)	DESIGN TEMP (°F) : 140 DESIGN PRESS (PSIG) 150 PSV PSIG ASME XI HYDRO (PSIG) 165
Drawing(s):	M-041C M-006D					
Line No.:	HBD-22, HBD-139			ASME XI Class: 3		
SUS:	011-01			Category: D-B		
Notes:	N/A			Code Items: D2.30 D2.40 D2.70 D2.80		

Pressure Test Zone		Scheduled Period For Test Type 1	2	3	Zone Description	Boundary Definition for Exam by VT-2	System Statistcs
SW19		H	L	L	**SW FEED TO H2 DILUTION BLWR 1-2**	SW371 TO SW373, SW375, SW5068 (INCLUDING SW374)	DESIGN TEMP (°F) : 140 DESIGN PRESS (PSIG) 150 PSV PSIG ASME XI HYDRO (PSIG) 165
Drawing(s):	M-041B						
Line No.:	HBC-44				ASME XI Class: 3		
SUS:	011-01				Category: D-B		
Notes:	N/A				Code Items: D2.30 D2.40 D2.70 D2.80		
SW20		H	L	L	**SW SUPPLY TO H2 DILUTION BLWR 1-2**	SW5068, SW375 TO SW330 (INCLUDING SW376, SW328)	DESIGN TEMP (°F) : 140 DESIGN PRESS (PSIG) 150 PSV PSIG ASME XI HYDRO (PSIG) 165
Drawing(s):	M-041B M-029D						
Line No.:	HBC-44				ASME XI Class: 3		
SUS:	011-01				Category: D-B		
Notes:	N/A				Code Items: D2.30 D2.40 D2.70 D2.80		
SW21		L	L	H	**SWP 1-3 DISCHARGE**	P3-3 TO SW19, SW1381 (INCLUDING F15-3)	DESIGN TEMP (°F) : 140 DESIGN PRESS (PSIG) 150 PSV PSIG ASME XI HYDRO (PSIG) 90
Drawing(s):	M-041A						
Line No.:	HBC-34				ASME XI Class: 3		
SUS:	011-01				Category: D-B		
Notes:	N/A				Code Items: D2.30 D2.40 D2.50 D2.60 D2.70 D2.80		
SW22		H	L	L	**SW TRAIN 3**	SW19 TO SW23, SW25, SW401 (INCLUDING SW400, SW22, SW24)	DESIGN TEMP (°F) : 140 DESIGN PRESS (PSIG) 150 PSV PSIG ASME XI HYDRO (PSIG) 165
Drawing(s):	M-041A						
Line No.:	HBC-34				ASME XI Class: 3		
SUS:	011-01				Category: D-B		
Notes:	N/A				Code Items: D2.30 D2.40 D2.70 D2.80		
SW23		H	L	L	**SW TO CCW H/X 1-3**	SW30 TO SW32, SW39, SW41 (INCLUDING SW31, SW33, E22-3, TW2194, TW1362, SW1429, SW37, SW40, SW42)	DESIGN TEMP (°F) : 175 DESIGN PRESS (PSIG) 120 PSV PSIG ASME XI HYDRO (PSIG) 132
Drawing(s):	M-041B						
Line No.:	HBC-34, HBC-38, HBC-43, HBC-42				ASME XI Class: 3		
SUS:	011-01				Category: D-B		
Notes:	N/A				Code Items: D2.30 D2.40 D2.70 D2.80		

Pressure Test Zone	Scheduled Period For Test Type 1	2	3	Zone Description	Boundary Definition for Exam by VT-2	System Statistcs
SW24	L	L	L	**SW TO CAC 1-3**	SW1368 TO SW1358, (CTMT P6, P10) (INCLUDING SW68, SW70, SW71, SW69, SW1391, E37-3)	DESIGN TEMP (°F) : 264 DESIGN PRESS (PSIG) 150 PSV PSIG 150 ASME XI HYDRO (PSIG) 188
Drawing(s): M-041C						
Line No.: HBB-7, HBC-46, HBC-47, HBB-11				ASME XI Class: 2		
SUS: 011-01				Category: C-H		
Notes: N/A				Code Items: C7.30 C7.70		
SW25	H	L	L	**SW TRAIN 1/2 TO CAC 1-3**	SW60 TO SW62, SW1368 (INCLUDING SW61, SW63)	DESIGN TEMP (°F) : 140 DESIGN PRESS (PSIG) 150 PSV PSIG ASME XI HYDRO (PSIG) 165
Drawing(s): M-041C						
Line No.: HBC-35				ASME XI Class: 3		
SUS: 011-01				Category: D-B		
Notes: N/A				Code Items: D2.30 D2.40 D2.70 D2.80		
SW26	H	L	L	**SW TO ECCS ROOM COOLER COIL 1-1**	SW86 TO SW84, SW90, SW89 (INCLUDING E42-1, SW87, TW1502)	DESIGN TEMP (°F) : 150 DESIGN PRESS (PSIG) 150 PSV PSIG ASME XI HYDRO (PSIG) 165
Drawing(s): M-041B						
Line No.: HBC-44, HBC-45				ASME XI Class: 3		
SUS: 011-01				Category: D-B		
Notes: N/A				Code Items: D2.30 D2.40 D2.70 D2.80		
SW27	H	L	L	**SW TO ECCS ROOM COOLER COIL 1-2**	SW102 TO SW100, SW106, SW105 (INCLUDING SW103, E42-2, TW1521)	DESIGN TEMP (°F) : 150 DESIGN PRESS (PSIG) 150 PSV PSIG ASME XI HYDRO (PSIG) 165
Drawing(s): M-041B						
Line No.: HBC-44, HBC-45				ASME XI Class: 3		
SUS: 011-01				Category: D-B		
Notes: N/A				Code Items: D2.30 D2.40 D2.70 D2.80		
SW28	H	L	L	**SW TO ECCS ROOM COOLER COIL 1-3**	SW94 TO SW92, SW98, SW97 (INCLUDING SW95, E42-3, TW1539)	DESIGN TEMP (°F) : 150 DESIGN PRESS (PSIG) 150 PSV PSIG ASME XI HYDRO (PSIG) 165
Drawing(s): M-041B						
Line No.: HBC-44, HBC-45				ASME XI Class: 3		
SUS: 011-01				Category: D-B		
Notes: N/A				Code Items: D2.30 D2.40 D2.70 D2.80		

Pressure Test Zone	Scheduled Period For Test Type 1	2	3	Zone Description	Boundary Definition for Exam by VT-2	System Statistcs
SW29	H	L	L	**SW TO ECCS ROOM COOLER COIL 1-4**	SW110 TO SW108, SW114, SW113 (INCLUDING SW111, TW1527, E42-4)	DESIGN TEMP (°F) : 150 DESIGN PRESS (PSIG) 150 PSV PSIG ASME XI HYDRO (PSIG) 165
Drawing(s): M-041B						
Line No.: HBC-44, HBC-45				ASME XI Class: 3		
SUS: 011-01				Category: D-B		
Notes: N/A				Code Items: D2.30 D2.40 D2.70 D2.80		
SW30	H	L	L	**SW TO ECCS ROOM COOLER COIL 1-5**	SW118 TO SW116, SW122, SW121 (INCLUDING SW119, TW1536, E42-5)	DESIGN TEMP (°F) : 150 DESIGN PRESS (PSIG) 150 PSV PSIG ASME XI HYDRO (PSIG) 165
Drawing(s): M-041B						
Line No.: HBC-44, HBC-45				ASME XI Class: 3		
SUS: 011-01				Category: D-B		
Notes: N/A				Code Items: D2.30 D2.40 D2.70 D2.80		
SW31	H	L	L	**SW RETURN FROM ECCS COILS**	SW122 TO SW114, SW106, SW98, SW90, SW121, SW113, SW105, SW97, SW89, SW82, SW242, SW326, SW77 (INCLUDING SW329, TW1386, SW258, SW259)	DESIGN TEMP (°F) : 200 DESIGN PRESS (PSIG) 150 PSV PSIG ASME XI HYDRO (PSIG) 165
Drawing(s): M-041B						
Line No.: HBC-45, HBC-37				ASME XI Class: 3		
SUS: 011-01				Category: D-B		
Notes: N/A				Code Items: D2.30 D2.40 D2.70 D2.80		
SW32	H	L	L	**SW RETURN FROM CAC 1-1**	SW1356 TO SW77	DESIGN TEMP (°F) : 200 DESIGN PRESS (PSIG) 150 PSV PSIG ASME XI HYDRO (PSIG) 165
Drawing(s): M-041C						
Line No.: HBC-37				ASME XI Class: 3		
SUS: 011-01				Category: D-B		
Notes: N/A				Code Items: D2.30 D2.40 D2.70 D2.80		
SW33	H	L	L	**SW RETURN FROM CAC 1-3**	SW1358 TO SW326, SW332 (INCLUDING SW325, SW331, TW1388)	DESIGN TEMP (°F) : 200 DESIGN PRESS (PSIG) 150 PSV PSIG ASME XI HYDRO (PSIG) 165
Drawing(s): M-041C						
Line No.: HBC-37				ASME XI Class: 3		
SUS: 011-01				Category: D-B		
Notes: N/A				Code Items: D2.30 D2.40 D2.70 D2.80		

Pressure Test Zone		Scheduled Period For Test Type 1	2	3	Zone Description	Boundary Definition for Exam by VT-2	System Statistcs
SW34		H	L	L	**SW RETURN FROM CAC 1-2**	SW332 TO SW1357, SW335 (INCLUDING TW1387, SW81)	DESIGN TEMP (°F) : 200 DESIGN PRESS (PSIG) 150 PSV PSIG ASME XI HYDRO (PSIG) 165
Drawing(s):	M-041C						
Line No.:	HBC-37				ASME XI Class: 3		
SUS:	011-01				Category: D-B		
Notes:	N/A				Code Items: D2.30 D2.40 D2.70 D2.80		
SW35		H	L	L	**SW RETURN HEADER**	SW44 TO SW43, SW335, SW82, SW57, SW2932, SW2931, INTAKE FOREBAY, INTAKE STRUCTURE, SW3962, SW3963 (INCLUDING SW78, TW2798, SW2930, SW2929, SW253, SW252)	DESIGN TEMP (°F) : 200 DESIGN PRESS (PSIG) 50 PSV PSIG ASME XI HYDRO (PSIG) 55
Drawing(s):	M-041B M-041C						
Line No.:	HBC-36				ASME XI Class: 3		
SUS:	011-01				Category: D-B		
Notes:	N/A				Code Items: D2.30 D2.40 D2.70 D2.80		

Pressure Test Program Table Nomenclature and Note Descriptions

The following abbreviation have been used in the ISI Program Table:

- L — Leakage System Test
- FL — Flow Test
- LB — Leakage System Test, to outer boundary valve
- O/L — Leakage collection system/Leakage System Test

The following are program note descriptions:

No.	Program Note Description
1.	Appendix J testing is conducted as an alternative to system leakage test when the piping and valves that are part of the containment system are Class 2 but the balance of the piping system is outside the scope of Section XI. NRC granted and approved the use of Code Case N-522, with provisions, as an acceptable test in lieu of system leakage testing.
2.	Pneumatic test may be performed in lieu of a System Leakage Test per IWA-5211(c).
3.	The System Leakage Test may be performed in conjunction with the 10CFR50 Appendix J Local Leak Rate Test (LLRT) when the test zone is pressurized to 38 psig (Design Basis Accident Pressure).
4.	Test Zones DH015, DH016, CF009, and CF010 will be VT-2 examined during the Reactor Coolant System Leakage Test every refueling. At the end of this inspection interval the system leakage test shall extend to the zones which encompasses the pressure retaining boundary. These test zones are to be pressurized to reflect Pa (nominal operating pressure corresponding with 100% reactor power), which is 2155 psig.
5.	Per IWC 5222(b) the Containment Spray ring headers are open ended discharge piping, being exempt from System Leakage Testing.
6.	VT-2 visual examination of containment penetrations P33 and P34 (Containment Purge) shall be per Relief Request RR-B4.
7.	Pressure testing of open ended Class 2 and 3 systems are exempted in accordance with IWC-5222(b) and IWD-5240(b), Boundaries. ASME Code Inquiry XI 98-13 added clarification, stating Class 2 and Class 3 open-ended portions of systems are exempted from pressure testing and associated VT-2 visual examinations.
8.	Per IWA-5222 and IWC-5222(b) lines are open-ended discharge/supply sample lines and are exempt from pressure tests. These lines will be tested in accordance with the requirements of 10CFR50 Appendix J, Type A test once every ten years.

No.	Program Note Description
9.	The Diesel Generator Auxiliary Systems, and Diesel Generator Fuel Oil Systems are included in the ASME XI Pressure Test Program per Regulatory Guide 1.26 recommendations.
10.	Containment penetrations P30 and P31 (Emergency Sump to Decay Heat Pump suction line) are enclosed in an annulus. In accordance with IWA-5244(a), Buried Components, evidence of leakage is obtained via low point drain on each guard pipe. Acceptable rate of leakage from each guard pipe tell-tail drain is 500 milliliters per two year period.
11.	Containment penetrations P27 and P28, line CCB-6, have a design pressure and temperature of 2500 psig and 350°F. These lines are protected by pressure safety valves DH1550 and DH1529 with a setpoint of 450 psig. Therefore, a hydrostatic test pressure required for a repair or replacement for these components shall be 563 psig.
12.	DH cooler saddle tell-tail visual examinations are required per the Weld, Bolt, and Component ISI Program.
13	Test Zones DH014 is tested in accordance with RR-A6 at the end of the inspection interval. This Class 1 system leakage test extends to the pressure-retaining boundaries which are DH11 and DH12. Because DH 11 pressure locking modification prevented pressurization of this boundary, relief request RR-A6 was written.
14.	The non-isolable Reactor Coolant System piping located in the Decay Heat Pit will be inspected through the porthole during the System Leakage Tests.
15.	Test Zones DO001A and DO003A are non-isolable buried components. Flow from the transfer pumps discharge flange to the day tank isolation valve will be verified by the performance of a flow test in accordance with IWA-5244(b)2. Any above ground piping shall be examined during this flow test.
16.	Test Zone DO001C and DO003C are considered open-ended components, being exempt from pressure testing, Refer to per ASME Inquiry XI 98-13 and IWD-5240. The Fuel Oil Storage Tanks and associated attached components are buried and vented to atmosphere. Because the EDG Fuel Oil Storage tanks are buried, no external VT-2 surface examinations can be performed. However, the tanks are drained, cleaned and internally inspected at atmospheric pressure as required per their respective preventive maintenance schedule. Any system integrity failure would be obvious by direct observed of fuel oil level decrease. This is considered a zero flow test in accordance with IWD-5222(e). Operators monitor the Fuel Oil Storage Tank levels daily to meet Technical Specification action statements, which ensures operability.

No.	Program Note Description
17.	The System Leakage Test for zones DO002 and DO004 will be performed with a minimum of 4000 gallons in the day tanks (T46-1, T46-2). Test zones DO002 and DO004 will consist of the day tanks, and all piping to and from the day tanks to the first normally closed valve. The flow path from the day tanks to the Emergency Diesel Generators will be included in the day tank test since the valves are locked open.
18.	The lines are open ended discharge piping, being outside the boundaries in accordance with IWD-5240(b). However, this line will be walked down and examined in accordance with IWD-5222(e) and confirmation of adequate flow verified.
19.	The Reactor Vessel gasket line for RC 46, (Test Zone RC002) and RCPs gasket drain lines (RC009, RC010, RC011, and RC012) are leakage collection systems and will be examined for operability per IWA-5243 and inspected during the RCS System Leakage tests.
20.	Containment penetrations P48 and P32 (Test Zones RC005 and RC007) are partially buried. In accordance with IWA-5244(a), Buried Components, Appendix J maximum allowable leakage rate shall meets the IWA 5244(a) requirement for the Owner established acceptable rate of flow.

6.0 NONDESTRUCTIVE EXAMINATIONS

Subarticle IWA-1400 of Section XI requires the development and preparation of written examination procedures necessary for the conduct of nondestructive examinations associated with Inservice Inspection operations. Written procedures for the performance of visual, surface, and volumetric examinations conducted at Davis-Besse Nuclear Power Station Unit #1 may be either Davis-Besse procedures or those of an outside NDE agency which have been reviewed and approved by Davis-Besse prior to implementation or use.

Methods, techniques, and procedures for inservice inspection are titled visual, surface, and volumetric. Each term describes a general method permitting a selection of different techniques and procedures restricted to that method to accommodate varying degrees of materials, accessibility, and radiation levels. References to ASME Section XI or to ASME Section V are to the 1995 Edition through the 1996 Addenda of these Codes.

6.1 Volumetric Examinations

6.1.1 Radiographic Examinations - Radiographic examinations will be conducted in accordance with Article 2 of ASME Section V.

6.1.2 Eddy Current Examinations - Eddy Current examinations will be conducted in accordance with Appendix IV of ASME Section XI and Article 8, Appendix II of ASME Section V.

6.1.3 Ultrasonic Examinations - Ultrasonic Examinations (UT) of ASME Section XI pressure boundary components will be conducted to either ASME Section XI, Appendix VIII or ASME Section V, Article 4 as discussed below.

6.1.3.1 ASME Section XI Appendix VIII

Ultrasonic Examinations (UT) of the Reactor Vessel, welds in piping, and bolts and studs will be examined in accordance with Appendix VIII to ASME Section XI.

10CFR 50.55a requires implementation of Appendix VIII, "Performance Demonstration for Ultrasonic Examination Systems", to ASME Section XI, 1995 Edition through the 1996 Addenda with modifications as stated in 10 CFR 50.55a(b)(2)(xiv, xv and xvi). Appendix VIII provides requirements for performance demonstration for ultrasonic examination procedures, equipment, and personnel

used to detect and size flaws. Implementation of Appendix VIII is according to the following schedule as defined in 10 CFR 50.55a(b)(6)(C):

COMPONENT	*SUPPLEMENT*	*REQUIRED IMPLEMENTATION DATE*
Piping and Bolting	1, 2, 3, and 8	May 22, 2000
RPV	4 and 6	November 22, 2000
Overlay	11	November 22, 2001
Nozzle	5 and 7	November 22, 2002
Dissimilar metal welds	10	November 22, 2002
Combined Qualifications	12 & 13	November 22, 2002

6.1.3.2 Performance Demonstration Initiative Program

The Performance Demonstration Initiative (PDI) is an organization formed of all U.S. nuclear utilities, to provide an efficient, cost-effective, and technically sound implementation of ultrasonic examination performance demonstration requirements. The Electric Power Research Institute (EPRI) NDE Center is the Performance Demonstration Administrator (PDA) for the program. The PDI Program Description Revision 1, Change 1 meets or exceeds the requirements of the 10 CFR 50.55a with the exception of the following three issues which affect Davis-Besse.

a) Piping Examinations conducted from the Inside Surface

Appendix VIII does not address piping examinations performed from the inside surface. No procedures or personnel are currently qualified by PDI to perform examinations from the inside surface.

The Reactor Vessel Nozzle to Pipe welds are examined from the inside surface during the 10-Year examination of the Reactor Vessel. Access to these welds is not available from the outside surfaces. It is expected that this issue will be resolved prior to the next scheduled examination of the Reactor Vessel.

b) RPV Length Sizing Tolerance

Paragraph 2.4.1 in the summary of comments issued with the Federal Register endorsing Appendix VIII stated that the PDI requirements are directly contained in paragraph 10 CFR 50.55a(b)(xv). However, the Final Rule inadvertently omits the length sizing qualification criteria of 0.75 inch RMSE used to qualify all examiners. The NRC has indicated that this was an oversight and that it will be corrected in a future revision of the Final Rule.

c) Single Side Access

Due to component configurations, access to examine a weld from both sides of the weld may not be available. 10 CFR 50.55a(b)(2)(xv)(A), 10 CFR 50.55a(b)(2)(xv) G and 10 CFR 50.55a(b)(2)(xvi) define requirements for coverage and qualification demonstration for examination performed from a single side. These requirements affect both piping and Reactor Vessel examinations.

Coverage credit will be taken for single side exams on ferritic piping. For austenitic stainless steel piping, current technology is not capable of reliably detecting or sizing flaws on the far side of an austenitic weld for configurations common to nuclear applications in the United States. Relief Request RR-A15 addresses the examination of austenitic stainless steel piping form one side.

All Reactor Vessel circumferential shell welds will be examined from both sides.

6.1.3.3 The PDI Program will be applied to similar metal piping welds, dissimilar metal piping welds, Reactor Vessel welds, Reactor Vessel nozzles, and bolting as described below.

a) ***Similar Metal Piping Welds*** - Appendix VIII, Supplements 2, 3, and 12 are applicable to all Class 1 and 2 austenitic and ferritic welds included in the Third 10-Year Inservice Inspection Program.

b) ***Dissimilar Metal Piping Welds*** - Appendix VIII Supplement 10 & 12 is applicable to all dissimilar metal piping welds included in the Third 10-Year Inservice Inspection Program. The PDI program does not presently have qualification procedures for this type of weld. The examination of dissimilar metal welds included in the Third 10-Year Inservice Inspection Interval will be deferred until the PDI qualifications are completed for dissimilar metal welds.

c) ***Reactor Vessel Circumferential and Longitudinal Welds -*** Appendix VIII, Supplements 4, 6, and 13 are applicable for the examination of Reactor Vessel shell welds, excluding the head to flange and shell to flange welds. Davis-Besse does not have any longitudinal welds in the Reactor Vessel. Appendix VIII is not applicable to the examination of the head to flange weld. Therefore, this weld will be examined in accordance with ASME Section XI and Article 4 of ASME Section V. Appendix VIII also is not applicable to the shell to flange weld. This weld will be examined in accordance with Appendix VIII when examined from the Reactor Vessel shell during the third inspection period. Relief Request RR-A8 addresses the use of Appendix VIII for the shell to flange weld. Relief Request RR-A12 defers the examination of the shell to flange weld to the third period.

d) ***Reactor Vessel Nozzle to Shell Welds*** - Appendix VIII, Supplement 7 is applicable for the examination of the Reactor Vessel Nozzle to shell welds. Implementation is required by November 22, 2002. These welds are not scheduled until the third inspection period, which is well after this date. Therefore, Davis-Besse expects the PDI Program will have the proper qualifications of these welds prior to them being examined.

e) ***Nozzle Inner Radius*** - Supplement 5 is applicable for the examination of the Reactor Vessel Nozzle Inner Radius. Implementation is required by November 22, 2002. These nozzles are not scheduled until the third inspection period, which is well after this date. Therefore, Davis-Besse expects the PDI

Program will have the proper qualifications of these welds prior to them being examined.

f) ***Bolting*** - Appendix VIII, Supplement 8 requires a site-specific calibration stud or bolt. PDI offers personnel qualifications from the bore hole and from the end surface of the bolt or stud. Davis-Besse will use either or both methods of the PDI qualification.

6.1.3.4 NRC Regulatory Guide 1.150 provides requirements for the ultrasonic examination of the Reactor Vessel. However, the NRC made the following statement in the resolution of comments to the Final Rule:

> "The NRC agrees that the prescriptive guidance given in Regulatory Guide 1.150, "Ultrasonic Testing of Reactor Vessel Welds During Preservice and Inservice Examinations," is not in total agreement with the PDI program which is a performance-based program. However, regulatory guides provide guidance and are not requirements. This rule requires implementation of the PDI program (or Appendix VIII as in the Code) and thus, supersedes any corresponding provisions in Regulatory Guide 1.150. It should be noted, however, that the regulatory guide provides instructive discussion on UT operability. The NRC staff will review RG 1.150 and determine whether any changes are necessary."

As a result of the NRC comments, NRC Regulatory Guide 1.150 will not be used for those examinations that are conducted to Appendix VIII requirements. Only the Reactor Vessel Head-to-Flange weld will be examined to the Regulatory Guide 1.150 requirements.

6.1.3.5 ASME Section XI non Appendix VIII UT Examinations

a) ***Vessels Greater Than 2 Inches in Thickness*** - Ultrasonic Examinations (UT) of vessels greater than 2 inches in thickness, other than the Reactor Vessel, will be examined in accordance with ASME Section V, Article 4 as supplemented by Table I-2000-1 of ASME Section XI.

b) ***Vessels Not Greater Than 2 Inches in Thickness*** - Ultrasonic Examinations (UT) of vessels not greater than 2 inches in thickness will be examined in accordance with Appendix III as supplemented by Table I-2000-1 of ASME Section XI.

6.2 ***Surface Examinations***

6.2.1 Liquid Penetrant Examinations - Liquid penetrant examinations will be conducted in accordance with the requirements of Article 6 of Section V of the ASME Code.

6.2.2 Magnetic Particle Examinations - Magnetic particle examinations will be conducted in accordance with the requirements of Article 7 of Section V of the ASME Code.

6.3 ***Visual Examinations***

6.3.1 Visual (VT-1, VT-2, and VT-3) examinations will be conducted in accordance with the requirements of Article 9 of Section V and IWA-2210 of ASME Section XI. The General Visual Examination conducted in accordance with Table IWE-2500-1, Examination Category E-A, will be conducted in accordance with IWE-3510.1.

6.4 ***Qualification of Nondestructive Examination Personnel***

6.4.1 Personnel performing volumetric or surface examinations will be qualified in accordance with ANSI/ASNT CP-189-1991 as amended by the requirements of IWA-2300 and 10 CFR 50.55a.

6.4.2 Personnel performing visual (VT-1, VT-2, and VT-3) will be qualified and certified to comparable levels of qualification as defined in ANSI/ASNT CP-189-1991 and IWA-2300.

6.4.3 The General Visual Examination of Table IWE-2500-1, Examination Category E-A, will be performed by, or under the direction of, a Registered Professional Engineer or other individual, knowledgeable in the requirements for design, inservice inspection, and testing of Class MC containment vessels.

7.0 INSERVICE INPECTION REQUIREMENTS FOR SNUBBERS

The inservice inspection requirements for snubbers are contained in Article IWF-5000 of ASME Section XI.

Subarticles IWF-5200, Preservice Examinations and Tests, and IWF-5300, Inservice Examinations and Tests, require the use of ASME/ANSI OM Part 4 for the examination and testing of snubbers. The 1995 Edition, 1996 Addenda, of ASME Section XI IWA-1600 references the 1987 Revision with OMa-1998 when using ASME/ANSI OM Part4. However, 10 CFR 50.55a(b)(2)(v) permits the use of the 1995 Edition thru the 1996 Addenda of Subsection ISTD in lieu of the requirements for snubbers contained in IWF-5200(a) and (b) and IWF-5300(a) and (b).

In lieu of these requirements, the Davis-Besse Snubbers will be examined and tested in accordance with the Davis-Besse Unit #1 Technical Specifications. (See Relief Request RR-A18).

8.0 INSERVICE INSPECTION DRAWINGS

Included in this section is a listing of the drawings of systems and components subject to examination inspection and testing in the Davis-Besse Nuclear Power Station Unit #1 Inservice Inspection Program.

8.1 Inservice Inspection Diagrams

Classification of systems for Class 1, 2, 3, and MC boundaries are documented on controlled drawings. Inservice Inspection Diagrams (ISID) for this submittal are listed below.

The classification boundaries are established based upon Davis-Besse Nuclear Power Station Unit #1 interpretation of the requirements and provisions established by 10CFR50.

TABLE 7

INSERVICE INSPECTION DIAGRAMS

ISID NUMBER	*TITLE*
ISID2-001	ISI Boundary Diagrams - Drawing Index/Legend Sheet
ISID2-003A	Main Steam & Reheat System Sh. 1
ISID2-003C	Main Steam & Reheat System Sh 3
ISID2-006D	Auxiliary Feedwater System
ISID2-007A	Steam Generator Secondary System
ISID2-007B	Steam Generator Secondary System
ISID2-010C	Make-Up Water Treatment System
ISID2-015A	Instrument Air System
ISID2-015D	Station Air System

ISID NUMBER	*TITLE*
ISID2-017A	Diesel Generators
ISID2-017B	Diesel Generators Air Start
ISID2-019	Nitrogen Supply System
ISID2-023	Containment Leak Rate Test Diagram
ISID2-029B	Aux. Bldg. Radwaste, Fuel Handling And Access Control Areas, Sh. 2 (HV & AC Air Flow Diagram
ISID2-029C	Containment And Penetration Rooms
ISID2-029D	Containment And Penetration Rooms Sh. 3 (HV & AC Air Flow Diagrams)
ISID2-029E	Containment And Penetration Rooms Sh. 4 (HV & AC Air Flow Diagrams)
ISID2-030A	Reactor Coolant System
ISID2-031A	Make-Up & Purification System
ISID2-031B	Make-Up & Purification System
ISID2-031C	Make-Up & Purification System
ISID2-033A	High Pressure Injection System
ISID2-033B	Decay Heat Train 1
ISID2-033C	Decay Heat Train 2
ISID2-034	Emergency Core Cooling System Ctmt. Spray & Core Flooding Systems
ISID2-035	Spent Fuel Pool Cooling System

ISID NUMBER	*TITLE*
ISID2-036A	Component Cooling Water System
ISID2-036B	Component Cooling Water System
ISID2-036C	Component Cooling Water System
ISID2-040A	Reactor Coolant System Details
ISID2-040D	Reactor Coolant Pump & Motor
ISID2-041A	Service Water Pumps & Secondary Service Water System
ISID2-041B	Primary Service Water System
ISID2-041C	Service Water System for Containment Air Coolers
ISID2-046	Station Drainage System

8.2 Inservice Inspection Isometric Drawings and Inservice Inspection Sketches

The isometric drawings (ISIM2) and Inservice Inspection Sketches (ISI-SK) are supplied in order to explicitly depict weld, component and support locations. Each weld or a component is identified with a unique identification number.

The Isometric Drawings and ISI Sketches applicable to the Inservice Inspection Program are listed below.

TABLE 8

INSERVICE INSPECTION ISOMETRIC DRAWINGS

ISIM2 NUMBER	*TITLE*
ISIM2-200	Inservice Inspection Isometric Drawing Index/Legend Sheet
ISIM2-203A	Main Steam System - Containment Building - Steam Generator 1-1
ISIM2-203B	Main Steam System - Containment Building - Steam Generator 1-2
ISIM2-203F	Main Steam System - Supply to Aux Feed Pump Turbine 1-1
ISIM2-203H	Main Steam System - Supply to Aux Feed Pump Turbine 1-2 & Exhaust
ISIM2-203J Sh. 1	Main Steam System - Main Steam Crossovers
ISIM2-203J Sh. 2	Main Steam System - Main Steam Crossovers
ISIM2-203K	Main Steam System - Auxiliary Feed Pump Turbine Exhaust
ISIM2-206F Sh. 1	Auxiliary Feedwater System - Auxiliary Feed Pump Discharge to Steam Generators
ISIM2-206F Sh. 2	Auxiliary Feedwater System - Auxiliary Feed Pump Discharge to Steam Generators
ISIM2-206F Sh. 3	Auxiliary Feedwater System - Auxiliary Feed Pump Discharge to Steam Generators
ISIM2-206F Sh. 4	Auxiliary Feedwater System - Auxiliary Feed Pump Discharge to Steam Generators
ISIM2-206F Sh. 5	Auxiliary Feedwater System - Auxiliary Feed Pump Discharge to Steam Generators
ISIM2-206G	Condensate & Service Water Systems - Aux & Start-up Feed Pumps Suction & Recirc

ISIM2 NUMBER	*TITLE*
ISIM2-206N	Auxiliary Feedwater System - Containment
ISIM2-206Q	Condensate System - Motor Driven Feed Pump P-241 Discharge
ISIM2-207A	Steam Generator Drain System - Containment Building
ISIM2-207C Sh. 1	Main Feedwater System - Auxiliary & Containment Building
ISIM2-207C Sh. 2	Main Feedwater System - Auxiliary & Containment Building
ISIM2-207E	Steam Generator No. 1-1 Drain/Blowdown System – Containment Building
ISIM2-207F	Steam Generator No. 1-1 Drain/Blowdown System - Auxiliary & Turbine Building
ISIM2-207G	Steam Generator No. 1-2 Drain/Blowdown System - Auxiliary & Turbine Building
ISIM2-210E	Make-Up Water Treatment System - Auxiliary Building
ISIM2-210H	Make-Up Water Treatment System - Containment Building
ISIM2-217A Sh. 1	Emergency Diesel Generators Fuel Oil System
ISIM2-217A Sh. 2	Emergency Diesel Generators Fuel Oil System
ISIM2-229 Sh. 1	Hydrogen Dilution System & Miscellaneous Containment Penetrations – Auxiliary & Containment Buildings
ISIM2-229 Sh. 2	Hydrogen Dilution System & Miscellaneous Containment Penetrations – Auxiliary & Containment Buildings
ISIM2-229 Sh. 3	Integrated Leak Rate Test Line
ISIM2-230A	Pressurizer Relief System - Containment Building

ISIM2 NUMBER	*TITLE*
ISIM2-230B	Reactor Coolant System
ISIM2-230C	Pressurizer Spray and Surge Lines
ISIM2-230D	Reactor Vessel Heat to Hot Leg Vent Line
ISIM2-231A	Purification Reactor Coolant Letdown System - Containment Building
ISIM2-231B Sh. 1	Make-Up & Purification System - Auxiliary Building Sh. 1
ISIM2-231B Sh. 2	Make-Up & Purification System - Auxiliary Building Sh. 2
ISIM2-231B Sh. 3	Make-Up & Purification System - Auxiliary Building Sh. 3
ISIM2-231C	Make-Up & Purification System - Auxiliary Building Sh. 4
ISIM2-231D Sh. 1	Make-Up & Purification System - Auxiliary Building Sh. 5
ISIM2-231D Sh. 2	Make-Up & Purification System - Auxiliary Building Sh. 6
ISIM2-231D Sh. 3	Make-Up & Purification System - Auxiliary Building Sh. 7
ISIM2-231E	Make-Up & Purification System - Auxiliary Building Sh. 8
ISIM2-233A	Emergency Core Cooling System - Borated Water Supply
ISIM2-233B Sh. 1	Emergency Core Cooling System - Pump Suction Piping
ISIM2-233B Sh. 2	Emergency Core Cooling System - Pump Suction Piping
ISIM2-233C Sh. 1	Decay Heat Removal System - Containment & Aux. Building Normal Cooldown
ISIM2-233C Sh. 2	Decay Heat Removal System - Containment & Aux. Building Normal Cooldown

ISIM2 NUMBER	*TITLE*
ISIM2-233D Sh. 1	High Pressure Injection System - Auxiliary Building
ISIM2-233D Sh. 2	High Pressure Injection System - Auxiliary Building
ISIM2-233D Sh. 3	High Pressure Injection System - Auxiliary Building
ISIM2-233D Sh. 4	High Pressure Injection System - Auxiliary Building
ISIM2-233E Sh. 1	High Pressure Injection System - Containment Building
ISIM2-233E Sh. 2	High Pressure Injection System - Containment Building
ISIM2-233F Sh. 1	Low Pressure Injection System - Auxiliary Building
ISIM2-233F Sh. 2	Low Pressure Injection System - Auxiliary Building
ISIM2-233F Sh. 3	Low Pressure Injection System - Auxiliary Building
ISIM2-233G	Refueling Canal & Incore Tank Fill & Drain System - Containment Building
ISIM2-231H	Make-Up & Purification System - Auxiliary Building Sh. 9
ISIM2-234A	Low Pressure Injection & Core Flooding Systems - Containment Building
ISIM2-234B Sh. 1	Containment Spray System - Containment Building
ISIM2-234B Sh. 2	Containment Spray System - Containment Building
ISIM2-234B Sh. 3	Containment Spray System - Containment Building
ISIM2-234C	Containment Spray System - Auxiliary Building - Pump 1-1 Discharge
ISIM2-234D Sh. 1	Containment Spray System - Auxiliary Building - Pump 1-1 Discharge

ISIM2 NUMBER	*TITLE*
ISIM2-234D Sh. 2	Containment Spray System - Auxiliary Building - Pump 1-1 Discharge
ISIM2-235A Sh. 1	Spent Fuel Pool Cooling System - Auxiliary Building Area 7
ISIM2-235A Sh. 2	Spent Fuel Pool Cooling System - Auxiliary Building Area 7
ISIM2-235A Sh. 3	Spent Fuel Pool Cooling System - Auxiliary Building Area 7
ISIM2-235A Sh. 4	Spent Fuel Pool Cooling System - Auxiliary Building Area 7
ISIM2-235B Sh. 1	Spent Fuel Pool Cooling System - Auxiliary Building Area 8
ISIM2-235B Sh. 2	Spent Fuel Pool Cooling System - Auxiliary Building Area 8
ISIM2-236A Sh. 1	Component Cooling Water System - Auxiliary Building EL 545'-0"
ISIM2-236A Sh. 2	Component Cooling Water System - Auxiliary Building EL 545'-0"
ISIM2-236B Sh. 1	Component Cooling Water System - Auxiliary Building EL 565'-0"
ISIM2-236B Sh. 2	Component Cooling Water System - Auxiliary Building EL 565'-0"
ISIM2-236C Sh. 1	Component Cooling Water System - Heat Exchangers Inlets EL 585'-0"
ISIM2-236C Sh. 2	Component Cooling Water System - Heat Exchangers Inlets EL 585'-0"
ISIM2-236C Sh. 3	Component Cooling Water System - Heat Exchangers Inlets EL 585'-0"
ISIM2-236D Sh. 1	Component Cooling Water System - C.C. Heat Exchangers Outlet Piping EL 585'-0"
ISIM2-236D Sh. 2	Component Cooling Water System - C.C. Heat Exchangers Outlet Piping EL 585'-0"

ISIM2 NUMBER	*TITLE*
ISIM2-236D Sh. 3	Component Cooling Water System - C.C. Heat Exchangers Outlet Piping EL 585'-0"
ISIM2-236E Sh. 1	Component Cooling Water System - Containment Building
ISIM2-236E Sh. 2	Component Cooling Water System - Containment Building
ISIM2-236F Sh. 1	Component Cooling Water System - Containment Building
ISIM2-236F Sh. 2	Component Cooling Water System - Containment Building
ISIM2-236F Sh. 3	Component Cooling Water System - Containment Building
ISIM2-236F Sh. 4	Component Cooling Water System - Containment Building
ISIM2-236H Sh. 1	Component Cooling Water System - Supply & Return - Emergency Diesel Generator
ISIM2-236H Sh. 2	Component Cooling Water System - Supply & Return - Emergency Diesel Generator
ISIM2-236H Sh. 3	Component Cooling Water System - Supply & Return - Emergency Diesel Generator
ISIM2-236H Sh. 4	Component Cooling Water System - Supply & Return - Emergency Diesel Generator
ISIM2-236J	Component Cooling Water System - Embedded Piping - Control Room Floor El. 623'-0"
ISIM2-240A	Reactor Coolant Drain System - Containment Building
ISIM2-240B	Quench Tank Drain System - Containment & Auxiliary Buildings
ISIM2-240C	Reactor Coolant Drain & Gaseous Radwaste Systems
ISIM2-240D	Containment Building Vent System

ISIM2 NUMBER	*TITLE*
ISIM2-241A	Service Water System - Coolers & Return Line
ISIM2-241B Sh. 1	Service Water System - Valve Rooms & Tunnel
ISIM2-241B Sh. 2	Service Water System - Valve Rooms & Tunnel
ISIM2-241C Sh. 1	Service Water System - Auxiliary Building - Supply Piping
ISIM2-241C Sh. 2	Service Water System - Auxiliary Building - Supply Piping
ISIM2-241D Sh. 1	Service Water System - Auxiliary Building - Return Piping
ISIM2-241D Sh. 2	Service Water System - Auxiliary Building - Return Piping
ISIM2-241E	Service Water System - Containment Air Cooler 1-1
ISIM2-241F	Service Water System - Containment Air Cooler 1-2
ISIM2-241G	Service Water System - Containment Air Cooler 1-3
ISIM2-241H Sh. 1	Service Water System - ECCS Room Coolers Supply & Return
ISIM2-241H Sh. 2	Service Water System - ECCS Room Coolers Supply & Return
ISIM2-241H Sh. 3	Service Water System - ECCS Room Coolers Supply & Return
ISIM2-241H Sh. 4	Service Water System - ECCS Room Coolers Supply & Return
ISIM2-241L	Service Water System - Auxiliary Building Return Piping
ISIM2-241M	Service Water System - Auxiliary Building - Supply to Motor Driven Feed Pump
ISIM2-246A	Liquid Radwaste System - Normal Sump Pumps Discharge - Containment & Auxiliary Buildings

ISIM2 NUMBER	*TITLE*
ISIM2-268D	Emergency Diesel Generator Air Intake and Exhaust
ISIM2-E371	Electrical Penetration Arrg't

TABLE 9

INSERVICE INSPECTION SKETCHES

ISI-SK NUMBER	*TITLE*
ISI-SK-001	Inservice Inspection Sketches - Drawing Index/Notes
ISI-SK-002	Reactor Vessel Welds
ISI-SK-003	Reactor Vessel Inlet and Outlet Nozzle Details
ISI-SK-004 Sh. 1	Reactor Vessel Closure Head Bolting Details
ISI-SK-004 Sh. 2	Reactor Vessel Closure Head Bolting Details
ISI-SK-005 Sh. 1	Control Rod Drive Housing Welds and Bolting Details
ISI-SK-005 Sh. 2	Control Rod Drive Housing Welds and Bolting Details
ISI-SK-006	Reactor Vessel Instrumentation Nozzle Details
ISI-SK-007 Sh. 1	Reactor Vessel Supports
ISI-SK-007 Sh. 2	Reactor Vessel Supports
ISI-SK-008	Reactor Vessel Core Support Assembly
ISI-SK-020	Pressurizer Outline

ISI-SK NUMBER	*TITLE*
ISI-SK-021	Pressurizer Upper Head Nozzle Details
ISI-SK-022	Pressurizer Lower Head Nozzle Details
ISI-SK-023	Pressurizer Bolting Details
ISI-SK-024 Sh. 1	Pressurizer Supports
ISI-SK-024 Sh. 2	Pressurizer Supports
ISI-SK-030	Steam Generator 1-1 Shell and Head Welds
ISI-SK-031	Steam Generator 1-2 Shell and Head Welds
ISI-SK-032	Steam Generator 1-1 Nozzle Welds
ISI-SK-033	Steam Generator 1-2 Nozzle Welds
ISI-SK-034	Steam Generators 1-1 and 1-2 Bolting Details Primary Side
ISI-SK-035 Sh. 1	Steam Generators 1-1 and 1-2 Upper Lateral Supports
ISI-SK-035 Sh. 2	Steam Generators 1-1 and 1-2 Upper Lateral Supports
ISI-SK-036 Sh. 1	Steam Generators 1-1 and 1-2 Lower Supports
ISI-SK-036 Sh. 2	Steam Generators 1-1 and 1-2 Lower Supports
ISI-SK-037	Steam Generator 1-1 Main Feedwater Attachment Welds
ISI-SK-038	Steam Generator 1-2 Main Feedwater Attachment Welds
ISI-SK-040	Reactor Coolant Pump Outline and Bolting Details
ISI-SK-041	RCP 1-1-1 and RCP 1-2-2 Pump Case Assembly

ISI-SK NUMBER	*TITLE*
ISI-SK-042	RCP 1-1-2 and RCP 1-2-1 Pump Case Assembly
ISI-SK-043	Reactor Coolant Pump Supports
ISI-SK-044 Sh. 1	Reactor Coolant Pump Flywheel Detail
ISI-SK-044 Sh. 2	Reactor Coolant Pump Flywheel Detail
ISI-SK-050	Decay Heat Coolers 1-1 and 1-2 Outline and Supports
ISI-SK-051	HP Injection Pumps 1-1 and 1-2 Outline and Supports
ISI-SK-052 Sh. 1	HP Injection Pumps 1-1 and 1-2 Pressure Retaining Welds and Bolting Details
ISI-SK-052 Sh. 2	HP Injection Pumps 1-1 and 1-2 Pressure Retaining Welds and Bolting Details
ISI-SK-053	Main Steam Vent Valves ICS 11A and ICS 11B Welds

9.0 RELIEF REQUESTS

The following relief requests are included in this section:

REQUEST NO.	*GENERAL DESCRIPTION*
RR-A1	Reactor Vessel Inlet and Outlet Nozzle-to-Pipe Welds
RR-A2	Reactor Vessel Head-to-Flange Weld
RR-A3	Insulated ASME Class 1 and 2 Pressure Retaining Bolted Connections
RR-A4	Limited Examinations for Reactor Coolant Piping Branch Connection Welds
RR-A5	Limited Examinations for Vessel-to-Nozzle Welds
RR-A6	ASME Class 1 Decay Heat Removal Piping between Valves DH11 and DH12
RR-A7	Hydrostatic Testing of Reactor Coolant System small diameter (<= 1 inch) vent, drain, and instrument piping
RR-A8	Reactor Vessel Flange-to-Shell Weld
RR-A9	Alternative Requirements for Nozzle Inner Radius Inspections for Class 1 Pressurizer and Steam Generator Nozzles - Implementation of Code Case N-619
RR-A10	Corrective Action of Leakage Identified at Bolted Connections - Implementation of Code Case N-566-1
RR-A11	Alternative Requirements to Required Percentages of Examinations - Implementation of Code Case N-598
RR-A12	Deferral of Inspections of Shell-to-Flange Weld of a Reactor Vessel - Implementation of Code Case N-623
RR-A13	Purchase, Exchange, or Transfer of Material Between Nuclear Plant Sites - Implementation of Code Case N-528
RR-A14	Alternative Calibration Block Material - Implementation of Code Case N-639

REQUEST NO.	*GENERAL DESCRIPTION*
RR-A15	Single Sided Examination of Austenitic Stainless Steel Piping
RR-A16	Annual Training for Ultrasonic Examination Personnel
RR-A17	Alternative Requirements for Qualification of VT-2 Examination Personnel - Implementation of Code Case N-546
RR-A18	Examination and Testing of Snubbers in accordance with the Davis-Besse Unit #1 Technical Specifications
RR-A19	Alternative Requirements for Qualification of Snubber VT-3 Examination Personnel
RR-B1	Decay Heat Removal Heat Exchanger Shell-to-Flange Weld
RR-B2	ASME Class 2 Emergency Core Cooling and Main Steam Piping Welds
RR-B3	Limited Examination of High Pressure Injection Pump Nozzle to Casing Welds
RR-B4	VT-2 Examination of Containment Purge Penetrations 33 and 34
RR-C1	Hydrostatic Testing of ASME Class 3 Systems - Implementation of Code Case N-498-1
RR-E1	Seals and Gaskets
RR-E2	Preservice of Reapplied Paint or Coatings
RR-E3	VT Prior to Paint or Coating Removal
RR-E4	VT-2 After Repair, Replacement or Modification
RR-E5	Successive Examinations After Repair
RR-E6	Bolt Torque or Tension Testing
RR-E7	Direct VT-3 Minimum Illumination and Maximum Examination Distance
RR-E8	Augmented Examination Grids

FIRST ENERGY NUCLEAR OPERATING COMPANY
DAVIS-BESSE UNIT 1
THIRD 10-YEAR INTERVAL
RELIEF REQUEST RR-A1

System/Component(s) for Which Relief is Requested:

Reactor Vessel Inlet and Outlet Nozzle to Pipe Welds:

36" Outlet Reactor Nozzle (Z) to Pipe Weld (FW111B)
36" Outlet Reactor Nozzle (X) to Pipe Weld (FW111A)
28" Inlet Reactor Nozzle (Z/W) to Pipe Weld (FW56B)
28" Inlet Reactor Nozzle (Y/Z) to Pipe Weld (FW113B)
28" Inlet Reactor Nozzle (X/Y) to Pipe Weld (FW56A)
28" Inlet Reactor Nozzle (W/X) to Pipe Weld (FW113A)

Reactor Vessel Nozzle to Core Flood Safe End Welds:
14" Core Flood Nozzle Safe-End Weld (WR-53-Y)
14" Core Flood Nozzle Safe-End Weld (WR-53-W)

Code Requirement:

ASME Boiler and Pressure Vessel Code, Section XI 1995 Edition through 1996 Addenda, Subsection IWB, Table 2500-1, Examination Category B-F and B-J, Item Numbers B5.10 and B9.11 require a volumetric and surface examination of welds.

The Reactor Inlet and Outlet Nozzle to Pipe welds are Code Item No. B9.11. The Core Flood Nozzle to Safe-End welds are Code Item B5.10.

Code Requirement from Which Relief is Requested:

Examination Categories B-F and B-J of Table IWB-2500-1 of the 1995 Edition, 1996 of ASME Section XI requires the examination of Code Items B5.10 and B9.11 be in accordance with Figure IWB-2500-8. Figure IWB-2500-8 requires both a volumetric examination of the inner 1/3 T and an surface examination from the outside (OD) surface. The volumetric examination can be performed from the inside (ID) of the nozzle using an automated remote inspection tool. However, the surface examination requires a manual magnetic particle examination from the OD surface. Because of the high radiation levels at this location, FENOC requests that the required surface examination be replace with an ultrasonic examination from the ID which is capable of detecting opposite side surface flaws.

Basis for Relief:

The surface examination would require approximately 40 man-hours for preparation of each of the reactor vessel inlet and outlet nozzle to pipe welds and an additional 10 man-hours of inspection time. Because radiation levels are anticipated to result in a total exposure of 60 to 90 manrem and since shielding is impractical in this area, the requirements are, therefore, impractical for use at Davis-Besse. Because of these high radiation levels, FENOC requests that the required surface examination be replaced with an ultrasonic examination from the ID which is capable of detecting opposite side surface flaws.

A demonstration of opposite surface flaw detection capabilities was performed at Framatone Technologies' (FTI) Lynchburg, Virginia facility on August 9, 1989. The purpose of this demonstration was to define the capabilities of detecting the minimum size (through wall dimension) reflector originating at the opposite (OD) surface that could be detected during an actual automated remote reactor vessel examination from the ID of the component.

In order to determine the opposite surface flaw detection capabilities a test block was fabricated that contained a series of axial and circumferential OD notches ranging in depth from .024" to .353". The test block reflector design was based on ASME Section XI acceptance criteria for surface planar flaws. All notch sizes used for the purpose of this demonstration are considered as acceptable surface planar flaws per Section XI acceptance criteria.

The block was submerged in water to simulate the actual field application and was subsequently scanned with a contact 45 degree L-wave dual element transducer.

Examination criteria such as scan direction, scan motions, and transducer were duplicated as closely as possible to the actual examination which will be performed with an automated remote reactor vessel inspection tool.

Scanning was performed in both the circumferential and axial directions to detect the referenced notches.

The essential examination parameters required to reproduce these results will be incorporated, as required, into the technical procedure which will be utilized for the on site examination. These parameters include a 45 degree, medium damped, 2.25 mHz, 1 1/4" x 1 1/4", dual element, L-wave transducer focused at a 2" depth; scanned both parallel and perpendicular to the weld with scanning speed not to exceed 4"/sec.;

indexing performed using a maximum of .2" index increment and a sample interval of at least .050".

Data was acquired and analyzed using the FTI data acquisition and imaging system (ACCUSONEX). The ultrasonic system was calibrated using the side drilled holes to establish a calibrated sweep range with a Distance Amplitude Correction (DAC) Curve.

The gain level for the DAC curve was used as a reference for the gain adjustment during this benchmark demonstration. To lower the recording threshold the DAC curve was adjusted to a 20% full screen height (FSH) flat recording threshold. The test block was then scanned several different times at increased gain levels until all of the notches were detectable. The result was all the notches were detectable at a gain level of 24 dB above reference with a recording threshold of 20% FSH. Due to the low material noise of the carbon steel test block excessive noise signals were not encountered allowing the use of such high gain levels.

The scanning sensitivity to be used for actual field examination will be determined in a similar manner using notches of various dimensions installed in the calibration block for the nozzle-to-pipe welds.

Table 1 shows the relationship of the notch dimensions to the maximum allowable flaw size permitted in this material. ASME Section XI acceptance standard IWB-3514 was used to make these determinations.

Sizing scans looking for tip diffracted signals were performed on the opposite surface reflectors. The same transducer that was used for detection was used for the sizing scans.

Tip diffracted signals were detected with good reliability for sizing data on the notches equal to or greater than 10% through wall. Tip signals for the reflectors at 5% through wall were detected but did not provide the resolution required to accurately size this small of a reflector.

The Performance Demonstration Initiative (PDI) does not address the examination of piping welds from the inside surface. It is FENOC's understanding that PDI will include the examination of piping from the inside surface as part of the qualification process for Supplement 12, Requirements for the Coordinated Implementation of Selected Aspects of Supplements 2, 3, 10, and 11, of Appendix VIII. Supplement 12 of Appendix VIII is required by 10 CFR 50.55a to be implemented by November 22, 2002. Once Supplement 12 is implemented, the examination process used at Davis-

Besse for examining the piping welds from the inside surface will be qualified in accordance with the PDI requirements.

Relief is request pursuant to 10 CFR 50.55a(a)(3)(i) as the proposed examination from the inside surface will provide an acceptable level of quality and safety. A relief request for these welds was previously approved for the Second 10-Year Interval in Relief Request RR-A1 (TAC Nos. M79034 and M77942).

Alternative Examination:

The Reactor Vessel Nozzle to Pipe Welds and the Reactor Vessel Nozzle to Core Flood Safe-End Welds will be examined from the inside surface utilizing equipment and procedures which are capable of detecting the minimum size (through wall dimension) reflector originating at the opposite (OD) surface which could be detected during automated remote reactor vessel examination from the ID of the component. Once the PDI is capable of qualification of piping examinations from the inside surface, the process used for the examination will also be qualified in accordance with the PDI requirements.

Justification for the Granting of Relief:

The Code-required surface examination of the Reactor Vessel Nozzle to Pipe Welds and the Reactor Vessel Nozzle to Core Flood Safe-End Welds is impractical as ALARA concerns prevent access to the area for examination.

The proposed alternative examination has been proven capable of detecting flaws originating from the outside surface of the piping. This will provide reasonable assurance that the weld does not contain unacceptable surface flaws.

Implementation Schedule:

The examination of the Reactor Vessel Nozzle to Pipe Welds and the Reactor Vessel Nozzle to Core Flood Safe-End Welds will occur during the third period of the inspection interval.

TABLE 1

AXIAL NOTCHES

Notch	(1) Length	(a) Depth	a/1	a/t'	Maximum Allowable a/t
A	.380"	.125"	.33	5.2%	13.8%
B	.375"	.062"	.17	2.6%	10.9%
C	.376"	.024"	.06	1.0%	8.6%
D	.623"	.251"	.40	10.5%	13.8%
E	.623"	.124"	.20	5.2%	11.7%
F	.623"	.050"	.08	2.1%	9.1%
G	.826"	.175"	.43	14.7%	13.8%
H	.826"	.175"	.21	7.37%	12.0%
I	.826"	.043"	.05	1.87%	8.6%

CIRCUMFERENTIAL NOTCHES

Notch	(1) Length	(a) Depth	a/1	a/t'	Maximum Allowable a/t
J	.375"	.130"	.35	5.4%	13.8%
K	.376"	.065"	.17	2.7%	10.9%
L	.375"	.031"	.08	1.3%	9.1%
M	.624"	.255"	.41	10.6%	13.8%
N	.625"	.129"	.21	5.4%	12.0%
O	.627"	.054"	.09	2.3%	9.2%
P	.826"	.352"	.43	14.7%	13.8%
Q	.823"	.177"	.22	7.4%	12.3%
R	.825"	.072"	.09	3.0%	9.2%

T' = 2.4"

MAXIMUM ALLOWABLE LENGTH FOR A FLAW DETECTED BY A SURFACE EXAMINATION IS 0.68"

FIRST ENERGY NUCLEAR OPERATING COMPANY
DAVIS-BESSE UNIT 1
THIRD 10-YEAR INTERVAL
RELIEF REQUEST RR-A2

System/Component(s) for Which Relief is Requested:

Reactor Vessel Head-to-Flange Weld (Weld WH-7)

Code Requirement:

Subsection IWB, Table IWB-2500-1, Examination Category B-A, Item No. B1.40 of the 1995 Edition, 1996 Addenda of ASME Section XI requires a volumetric examination and surface examination of essentially 100% of the weld length.

Code Case N-460 states that when the entire examination volume or area cannot be examined due to interference by another component or part geometry, a reduction in examination coverage may be accepted provided the reduction in coverage for that weld is less than 10 percent.

Code Requirement from Which Relief is Requested:

Relief is requested from performing a volumetric examination of essentially 100% of the weld length. The reduction in examination coverage of the weld is greater than 10%.

Basis for Relief:

Paragraph T-441.1, Article 4, Section V of the 1995 Edition, 1996 Addenda of ASME Section XI requires the examination volume be scanned with angle beam search units directed both at right angles to the weld axis and along the weld axis. Wherever feasible, each examination shall be performed in two directions. The adjacent base metal in the examination volume must be completely scanned by two angle beams, but need not be completely scanned by both angle beams from both directions. The examination volume for this weld is defined in Figure IWB-2500-5.

The examination volume can be scanned along the weld axis from two directions. However, due to the extreme angle of the transition from the curvature of the head base material to the flange, access for scanning perpendicular to the weld axis is restricted to only the head side of the weld. As the inside surface is cladded, a full-V examination from one side is not possible. Radiographic examination of this weld is

not considered feasible due to the radiation levels (approximately 1-2 R/hr) at the inside surface of the head.

In addition, each of three lifting lugs cover approximately 10 inches of the weld which limits access to approximately 6% of the weld area.

These limitations result in approximately 80% examination volume defined in Figure IWB-2500-5 being examined volumetrically. With the exception of the lifting lugs, the entire weld is available for a surface examination. (See drawing ISI-SK-002).

During the Second 10-Year Interval, no indications were recorded during examinations of this weld.

Relief is request pursuant to 10 CFR 50.55a(a)(3)(i) as the proposed examination will provide an acceptable level of quality and safety as reflectors orientated both parallel and transverse to the weld can be located. A relief request for this weld was previously approved for the Second 10-Year Interval in Relief Request RR-A2 (TAC Nos. M79034 and M77942).

Alternative Examination:

The Reactor Vessel Head-to-Flange weld will be examined along the weld axis in 2 directions, but will be examined perpendicular to the weld axis in only one direction. Also, a surface examination will be performed as required.

Justification for the Granting of Relief:

The ultrasonic examination of the Reactor Vessel Head-to-Flange Weld has limitations due to the transition curvature of the head base material to the flange. Lifting lugs also restrict access to the weld. The reactor vessel design makes the Code required volumetric examination of the Head-to-Flange weld impractical to perform. In order to examine the Head-to-Flange weld to the extent required by the Code, the Reactor Vessel Closure Head would require significant design modifications. Approximately 80% of the required Code examinations will be completed for the weld. These examinations will identify reflectors orientated both parallel and transverse to the weld. These examinations in conjunction with the required surface examination will provide reasonable assurance that the weld does not contain unacceptable flaws.

Implementation Schedule:

One-third of the Reactor Vessel Head-to-Flange Weld will be examined each period.

FIRST ENERGY NUCLEAR OPERATING COMPANY
DAVIS-BESSE UNIT 1
THIRD 10-YEAR INTERVAL
RELIEF REQUEST RR-A3

System/Component(s) for Which Relief is Requested:

Insulated ASME Class 1 and 2 Pressure Retaining Bolted Connections

Code Requirement:

Paragraph IWA-5242(a) of the 1995 Edition, 1996 Addenda of ASME Section XI requires that for systems borated for the purpose of controlling reactivity, insulation shall be removed from pressure retaining bolted connections for VT-2 visual examination.

Code Requirement from Which Relief is Requested:

Relief is requested from the removal of insulation from pressure retaining bolted connections during the conduct of the pressure tests and VT-2 visual examination in ASME Class 1 and 2 systems.

Basis for Relief:

There are approximately 60 insulated Class 1 bolted connections including the four Reactor Coolant Pumps. It is estimated that removal and replacement of the insulation will incur 20 man-rem of exposure. Since Class 1 pressure tests must be conducted with the plant in Hot Standby (Mode 3) to satisfy Technical Specification pressure/temperature limits, replacement of insulation must be conducted on components at their nominal operating pressure (2155 psig.) and temperature (532°F). It is estimated that this would add at least two days to the critical path of a refueling outage, during return of the unit to service.

The intended purpose of removing insulation from bolted connections during pressure tests is to more readily detect boric acid leakage and potential corrosion of bolting. Boric acid leakage leaves a boric acid crystal residue when it evaporates. As the Class 1 leakage tests are conducted at normal operating pressure (2155 psig), the same leakage would occur during normal operation as would be expected during the Class 1 leakage test. Leakage following normal operation would be evident due to the presence of boric acid residue. This residue would be visible during inspections conducted with the system depressurized.

Not all materials are susceptible to corrosion from boric acid leakage. ASME Code Case N-616 states that when corrosive resistant bolting material that is used has a chromium content greater than or equal to 10%, such as SA-564 Grade 630 H1100, SA-453 Grade 660, SB-637 (UNS N07718) or SB-637 (UNS N07750), it is permissible to perform the VT-2 examination without insulation removal. The similar corrosion resistance of 410 series stainless steels (such as SA-193 Grade 6) has been demonstrated in EPRI Reports NP-5769 and TR-104748.

Relief is request pursuant to 10 CFR 50.55a(a)(3)(ii) as the removal of insulation at elevated pressures and temperatures would result in hardship or unusual difficulty without a compensating increase in the level of quality and safety. A relief request for performing the VT-2 visual examination of Class 1 bolted connections without the system pressurized was previously approved for the Second 10-Year Interval in Relief Request RR-A7 (TAC Nos. M79034 and M77942).

Alternative Examination:

Code Case N-616 will be implemented for the VT-2 examination of ASME Class 1 and 2 bolting. The VT-2 examination will be performed without insulation removal when corrosive resistant bolting material used in a pressure retaining bolted connection has a chromium content greater than or equal to 10%. Code Case N-616 will not be applied to:

a) A453 Grade 660 bolting that is preloaded to 85% of yield or greater.
b) Bolts made from A-193 Grade B6 material (Grade 410 stainless steel) tempered below 1100°F.
c) Bolts made from SA-564 Grade 630 material that were not hardened to H1100 condition.

For Class 1 and 2 pressure retaining connections with bolting which has a chromium content less than 10%, insulation will be removed to perform the VT-2 visual examination of the bolted connection for evidence of leakage. This VT-2 visual examination will be performed once each period. For Class 1 systems, the VT-2 examination will be performed without the connection being pressurized. For Class 2 systems, the VT-2 examination will be performed with the system pressurized.

At all bolting connections, included those containing corrosive resistant bolting material, if evidence of leakage is detected, either by discovery of active leakage or evidence of boric acid crystals, the insulation will be removed and the bolted connection will be reexamined and, if necessary, evaluated in accordance with the corrective measures of paragraph IWA-5250.

Justification for the Granting of Relief:

Corrosion resistant bolting has been in service for many years. There have not been any incidents of corrosion of these materials noted. Removing and reinstalling insulation, including erection and removal of scaffolding when necessary to provide access, would require significant time and radiation exposure to facilitate examination for a condition which experience throughout the industry has shown to be very unlikely to occur.

The Code requires that a VT-2 visual examination be performed during system pressure tests at the nominal operating pressures and temperatures for that system. The Class 1 pressure tests must be conducted with the plant in Hot Standby (Mode 3) to satisfy the Technical Specification pressure/temperature limits. Based on the safety implications of removing and/or reinstalling the insulation at elevated pressures and temperatures, the removal of insulation and the performance of the VT-2 visual examinations at least once per inspection period with the system depressurized is acceptable. Any leakage at the bolted connection would be evident from boric acid residue.

Implementation Schedule:

Pressure tests will be conducted in accordance with the frequency of examination requirements of Tables IWB-2500 and IWC-2500. Class 1 and 2 pressure retaining bolted connections with bolting which has a chromium content of less than 10% will be examined, with the insulation removed, once per inspection period. The Class 1 components will be examined with the system depressurized.

FIRST ENERGY NUCLEAR OPERATING COMPANY
DAVIS-BESSE UNIT 1
THIRD 10-YEAR INTERVAL
RELIEF REQUEST RR-A4

System/Component(s) for Which Relief is Requested:

Two Reactor Coolant Piping Branch Connection Welds. Examination Category B-J, Item No. B9.31 (Branch Pipe Connection Welds NPS 4" or Larger)

1 - 12 inch Decay Heat Nozzle Branch Connection Weld
1 - 10 inch Surge Line Nozzle Branch Connection Weld

Code Requirement:

Subsection IWB, Table IWB-2500-1, Examination Category B-J, Item No. B9.31 (Branch Pipe Connection Welds NPS 4" or Larger) of the 1995 Edition, 1996 Addenda of ASME Section XI requires a surface and volumetric examination of 25 percent of the population of branch connection welds during the 10-year interval. The examination requirements are identified in Figure No. IWB-2500-9, -10, and -11. Essentially 100 percent of the weld length requires examination.

Code Case N-460 states that when the entire examination volume or area cannot be examined due to interference by another component or part geometry, a reduction in examination coverage may be accepted provided the reduction in coverage for that weld is less than 10 percent.

Code Requirement from Which Relief is Requested:

Relief is requested from performing a volumetric examination of essentially 100% of the weld length. The reduction in examination coverage of the weld is greater than 10%.

Basis for Relief:

The volumetric examination of the identified welds is limited by the component geometry such that the reduction in coverage is greater than 10 percent. The surface examination is not limited.

The branch connection weld configuration is similar to Figure IWB-2500-9. Article III-4000 requires a total of four scans for complete examination coverage.

Scan 1 - A circumferential scan clockwise around the nozzle for reflectors transverse to the weld.
Scan 2 - A circumferential scan counter-clockwise around the nozzle for reflectors transverse to the weld.
Scan 3 - An axial scan from the pipe surface around the nozzle for reflectors parallel to the weld.
Scan 4 - An axial scan from the nozzle surface around the nozzle for reflectors parallel to the weld.

The Reactor Coolant Piping is cladded, which limits the examination path to a one-half vee sound path.

Each branch connection weld can be completely (100 percent) examined circumferentially in both directions. It can also be examined completely (100 percent) in the axial direction from the pipe surface. However, no reliable scan can be performed from the nozzle side due to the nozzle radius interfering with the examination scan. The Reactor Coolant Piping cladding also limits the ability to "bounce" the ultrasonic beam from the pipe side of the weld to obtain coverage in the fourth beam direction. Therefore, only 3 of the 4 required beam directions can be obtained. This results in examination of approximately 75 percent of the required examination volume. The attached sketch provides an illustration of the typical nozzle configuration and examination coverage.

The examination volume is examined in at least one direction to detect reflectors in both the parallel and transverse directions to the weld. This should detect any defects that may exist.

Additional welds exist for this examination category item, but are in less critical locations or are subject to less severe service conditions. However, these welds are similar in configuration and would also require relief if they were selected for examination during the present 10-year interval.

Relief is request pursuant to 10 CFR 50.55a(a)(3)(i) as the proposed examination will provide an acceptable level of quality and safety as reflectors orientated both parallel and transverse to the weld can be located. A relief request for these welds was previously approved for the Second 10-Year Interval in Relief Request RR-A10 (TAC No. M93310).

Alternative Examination:

Each weld will be examined in the circumferential direction in accordance with ASME Code requirements. Each weld will be examined in the axial direction from the pipe

surface only. The surface examination will be performed as required by the ASME Code.

Justification for the Granting of Relief:

To meet the Code requirements, the subject welds must be examined in four directions, including two axial directions, or from one side using extended beam paths to obtain two-directional coverage. The nozzle geometry for these branch connection welds precludes axial scanning from the nozzle side of the weld. Extending the beam path to obtain two-directional coverage from one side is not possible due to cladding on the inside surface of the Reactor Coolant System Piping. These conditions make the Code coverage requirements impractical for these welds. To meet the Code requirements, the branch connections would require design modifications to allow access for examination. Imposition of the necessary design modifications would create a significant burden.

In addition to the Code required surface examinations, a significant portion (≈75%) of each weld will receive a volumetric examination. Consequently, any significant patterns of degradation should be detected. Therefore, the surface examinations and the limited volumetric examination will provide reasonable assurance of the structural integrity of these branch connection welds.

Implementation Schedule:

The examination of these welds will be scheduled to meet the requirements of Table IWB-2412-1.

REACTOR COOLANT BRANCH CONNECTION WELDS

SCAN 1 - 100% COVERAGE
SCAN 2 - 100% COVERAGE
SCAN 3 - 100% COVERAGE
SCAN 4 - 0% COVERAGE
AVERAGE OF THE FOUR SCANS = EXAM 75% COMPLETE

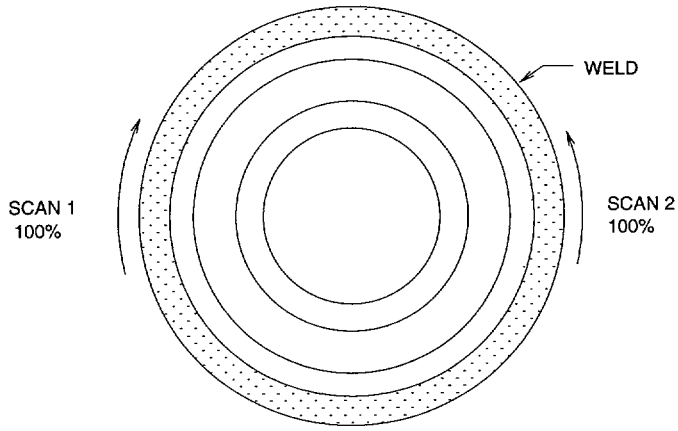

CIRCUMFERENTIAL SCANS
100% COVERAGE

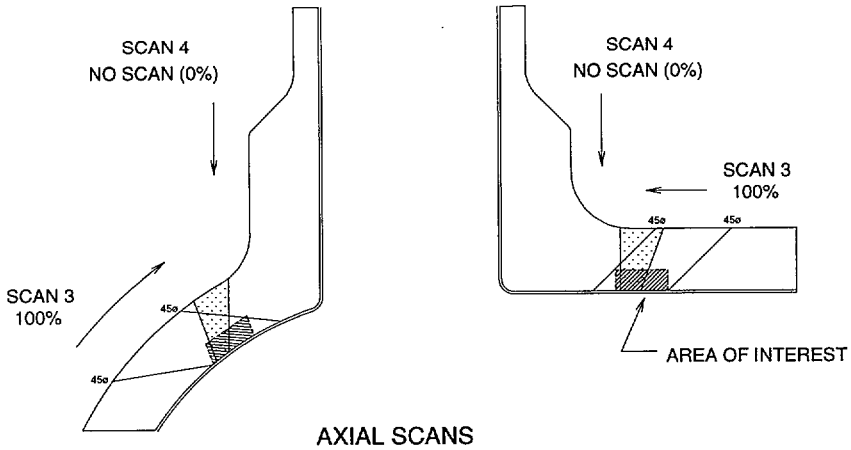

AXIAL SCANS
50% COVERAGE

FIRST ENERGY NUCLEAR OPERATING COMPANY
DAVIS-BESSE UNIT 1
THIRD 10-YEAR INTERVAL
RELIEF REQUEST RR-A5

System/Component(s) for Which Relief is Requested:

Five Pressurizer Nozzle to Vessel Welds - Examination Category B-D, Item No. B3.110 (Nozzle-to Vessel Welds)

1 - Pressurizer Spray Nozzle to Upper Pressurizer Head Weld
3 - Pressurizer Relief Nozzle to Upper Pressurizer Head Welds
1 - Pressurizer Surge Line Nozzle to Lower Head Weld

Six Steam Generator (Primary Side) Nozzle to Vessel Welds - Examination Category B-D, Item No. B3.130 (Nozzle-to Vessel Welds)

4 - Steam Generator Outlet Nozzle to Lower Head Welds
2 - Steam Generator Inlet Nozzle to Upper Head Welds

Code Requirement:

Subsection IWB, Table IWB-2500-1, Examination Category B-D, Item No. B3.110 (Pressurizer Nozzle to Vessel Welds) requires a volumetric examination of all nozzle to vessel welds.

Subsection IWB, Table IWB-2500-1, Examination Category B-D, Item No. B3.130 (Steam Generators Primary Side Nozzle to Vessel Welds) requires a volumetric examination of all nozzle to vessel welds.

The examination requirements for these examinations are identified in Figure No. IWB-2500-7(a).

Code Case N-460 states that when the entire examination volume or area cannot be examined due to interference by another component or part geometry, a reduction in examination coverage may be accepted provided the reduction in coverage for that weld is less than 10 percent.

Code Requirement from Which Relief is Requested:

Relief is requested from performing a volumetric examination of essentially 100% of the weld length. The reduction in examination coverage of the weld is greater than 10%.

Basis for Relief:

Paragraph T-441.1, Article 4, Section V of the 1995 Edition, 1996 Addenda of ASME Section XI requires the examination volume be scanned with angle beam search units directed both at right angles to the weld axis and along the weld axis. Wherever feasible, each examination shall be performed in two directions. The adjacent base metal in the examination volume must be completely scanned by two angle beams, but need not be completely scanned by both angle beams from both directions. The examination volume for this weld is defined in Figure IWB-2500-5. The Pressurizer and Steam Generator Heads are cladded which limits the examination path to a one-half vee sound path.

The base material coverage for each nozzle examination volume requires two beam angles from at least two directions (parallel and perpendicular to the weld axis). Examination of the weld material requires two beam angles from four directions (parallel and perpendicular to the weld axis in opposing directions). In addition to the angle beam pair, a near surface search unit will be used to examine the near surface. Maximum coverage is obtained by scanning to the extent possible from the head, blend radius, and nozzle barrel. The limiting conditions are due to the nozzle configuration and internal cladding which limits the ability to "bounce" the ultrasonic beam from the inside surface of the vessel. The approximate examination coverage obtained for each of the nozzle-to-vessel welds are as noted in the following table.

Component	Examination Coverage
Pressurizer Spray Nozzle to Upper Pressurizer Head Weld	72%
Pressurizer Relief Nozzle to Upper Pressurizer Head Weld	60%
Pressurizer Surge Nozzle to Lower Pressurizer Head Weld	69%
Steam Generator Outlet Nozzle to Lower Head Weld	75%
Steam Generator Inlet Nozzle to Upper Head Weld	72%

Relief is request pursuant to 10 CFR 50.55a(a)(3)(i) as the proposed examination will provide an acceptable level of quality and safety as reflectors orientated both parallel and transverse to the weld can be located. A relief request for these welds was previously approved for the Second 10-Year Interval in Relief Request RR-A11 (TAC No. M93310).

Alternative Examination:

Each weld will be examined in two opposing directions from the circumferential and axial directions to the extent possible.

Justification for the Granting of Relief:

To meet the Code requirements, the subject welds must be examined in four directions, including two axial directions, or from one side using extended beam paths to obtain two-directional coverage. The nozzle geometry for these vessel-to-nozzle welds limits axial scanning from the nozzle side of the weld. Extending the beam path to obtain two-directional coverage from one side is not possible due to cladding on the inside surface of the Reactor Coolant System Piping. These conditions make the Code coverage requirements impractical for these welds. To meet the Code requirements, the branch connections would require design modifications to allow access for examination. Imposition of the necessary design modifications would create a significant burden.

In addition to the Code required surface examinations, a significant portion (>60%) of each weld will receive a volumetric examination. Consequently, any significant patterns of degradation should be detected. Therefore, reasonable assurance of the structural integrity of these vessel-to-nozzle welds will be provided by the limited volumetric examination.

Implementation Schedule:

The examination of these welds will be scheduled to meet the requirements of Table IWB-2412-1.

FIRST ENERGY NUCLEAR OPERATING COMPANY
DAVIS-BESSE UNIT 1
THIRD 10-YEAR INTERVAL
RELIEF REQUEST RR-A6

System/Component(s) for Which Relief is Requested:

ASME Class 1 Decay Heat Removal Piping between Valves DH 11 and DH 12

Code Requirement:

ASME Section XI, 1995 Edition, 1996 Addenda, Subsection IWB-2500, Table IWB-2500-1, Examination Category B-P, Item No. B15.50 requires a system leakage test in accordance with IWB-5220. IWB-5222(b) requires the pressure retaining boundary during the system leakage test conducted at or near the end of the inspection interval to extend to all Class 1 pressure retaining components within the system boundary.

Code Requirement from Which Relief is Requested:

Relief is requested from performing the system leakage test at or near the end of the interval for a segment of Class 1 piping approximately 4 feet in length located between isolation valves DH 11 and DH 12. Valves DH 11 and DH 12 are installed in the normal cooldown line from the Reactor Coolant System to the Decay Heat Removal System.

Basis for Relief:

Valves DH 11 and DH 12 are installed in the normal cooldown line from the Reactor Coolant System to the Decay Heat Removal System. DH 12 is the first isolation valve off of the Reactor Coolant System while DH 11 is the second isolation valve. The ASME Class 1 boundary extends through DH 12 to DH 11. The piping between DH 11 and DH 12 is a four foot section of 12 inch seamless schedule 140 piping with a 1 inch drain line and a ¾ inch by-pass line around DH 12. Two 12-inch pipe welds, which connect the piping to the valves, are the only large bore welds within the boundary. This piping is installed within a watertight enclosure (Decay Heat Pit) which protects DH 11 and DH 12 from flooding following a Loss of Coolant Accident (LOCA).

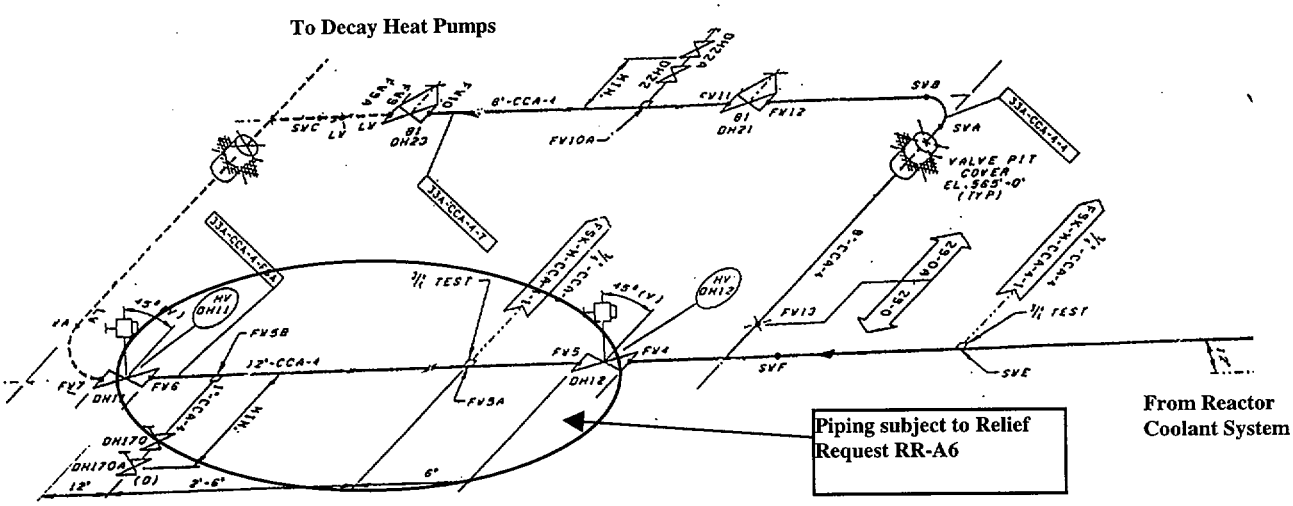

Valves DH 11 and DH 12 are motor operated gate valves with flexible wedges. NRC Information Notice 92-26 "Pressure Locking of Motor Operated Flexible Wedge Gate Valves" provides information regarding flexible wedge gate valves which may be subject to pressure locking under certain operating conditions. FENOC's evaluation of this Information Notice identified that DH 11 and DH 12 were susceptible to pressure locking. Subsequently, DH 11 and DH 12 were modified by drilling a small vent hole in the upstream disc of each valve's wedge to eliminate the pressure locking concern.

The required system leakage test pressure of the piping between DH 11 and DH 12 is 2155 psig. During the eleventh refueling outage, the piping between DH 11 and DH 12 was pressurized during Mode 5 to determine if this test pressure could be achieved. At 800 psig, the pressure locking vent hole allowed leakage past the DH 12 upstream disc. This confirmed that in order to perform the system leakage test of the piping between DH 11 and DH 12, the Reactor Coolant System must be pressurized to prevent flexing of the DH 12 wedge. Compliance with the pressure/temperature limits of Davis-Besse Nuclear Power Station (DBNPS) Technical Specification 3.4.9.1 requires the plant enter Mode 3 prior to attaining the Reactor Coolant System pressure of 2155 psig required to perform the system leakage test.

Three options are available to perform the system leakage test of the piping between valves DH 11 and DH 12.

Option one is to open valve DH 12 while in Mode 3 at full temperature and pressure to pressurize the piping between DH 11 and DH 12 to 2155 psig. The piping could then be examined remotely through the Decay Heat Pit Inspection Port. Opening DH 12 while in Mode 3 is not considered viable as Technical Specification 3.5.2 prohibits

DH 11 or DH 12 from being open when the Reactor Coolant System pressure is greater than 328 psig. Therefore, DH 12 may not be opened to pressurize the piping during the normal Reactor Coolant System hydrostatic test.

The second option requires entry into the Decay Heat Pit while in Mode 3 with the Reactor Coolant System at full temperature and pressure to pressurize the piping between DH 11 and DH 12 with a hydrostatic pump. Entering the Decay Heat Pit while in Mode 3 requires removal of the Decay Heat Pit cover to provide access to the Decay Heat Pit with the Reactor Coolant System at full temperature (532°F) and pressure (2155 psig). The system leakage test would be performed by pressurizing the piping between DH 11 and DH 12 with a hydrostatic pump to obtain the required test pressure. Technical Specification 3.5.2 requires the Decay Heat Pit be sealed and closed in Modes 1, 2, and 3. Opening this pit in Mode 3 requires an intentional entry in Technical Specification 3.0.3 as it would make both Low Pressure Injection pumps inoperable. As Technical Specification 3.0.3 is not intended to be used as an operational convenience to permit redundant safety systems to be out of service, this is not an acceptable option.

FENOC considers these two options a hardship and a detriment to the quality and safety of the Reactor Coolant System.

The third option requires the reactor vessel to be defueled and the RCS drained down to disassemble DH12 and perform a temporary modification to the disk to establish test conditions. FENOC considers this option to be a hardship and unusually difficult without a compensatory increase in the level of quality and safety.

Relief is request pursuant to 10 CFR 50.55a(a)(3)(ii). Testing of the piping between DH 11 and DH 12 during the system leakage test would result in hardship or unusual difficulty without a compensating increase in the level of quality and safety. A relief request for this piping between DH 11 and DH 12 was previously approved for the Second 10-Year Interval in Relief Request RR-A16 (TAC No. MA4549).

Alternative Examination:

The required system leakage test pressure for the piping between DH 11 and DH 12 is 2155 psig. In lieu of the system leakage test at the required pressure, the segment of piping between DH 11 and DH 12 will be VT-2 examined, with the insulation removed, for boric acid residue which would be indicative of leakage. The piping will have undergone a 4-hour hold at greater than 200 psig and several days of operation at Decay Heat Removal pressures (approximately 45 psig). Since the Decay Heat System contains borated water, any pressure boundary leak would be identified by the formation of boric acid crystals at the location of leakage.

As noted above, the piping between DH 11 and DH 12 is a four foot section of seamless piping connected to DH 11 and DH 12 by field welds. In addition to the VT-2 examination, each of these 2 field welds will be subjected to a surface examination and a volumetric examination during each Inservice Inspection Interval. The volumetric examination is a limited examination as the valve taper prevents ultrasonic scanning from the valve side.

Justification for the Granting of Relief:

Based on the requirements of the Technical Specifications, the system leakage test of the segment of piping between valves DH 11 and DH 12 would require the Reactor Vessel be defueled and the Reactor Coolant System drained below the level of valve DH 12 to perform the necessary modification to the valve disk prior to pressurizing.

The piping between valves DH 11 and DH 12 is a 4-foot section of seamless stainless steel pipe. Both pressure boundary welds between the valves and the section of pipe will be subjected to a limited volumetric examination and a surface examination in accordance with the ASME Code, Section XI. Although this is a limited examination, examination in three of the four required examination directions should detect any flaw propagating through the weld. The absence of any detectable flaws will provide assurance of the structural integrity of the welds.

During operation of the Decay Heat System, valves DH 11 and DH 12 are normally opened before the Reactor Coolant System pressure reaches 260 psig during a Reactor Coolant System cooldown in order to meet Technical Specification 3.4.2 requirements for Low Temperature Overpressure Protection. During the cooldown, the pressure of the piping between valves DH 11 and DH 12 will be greater than 200 psig for at least 4 hours. This is followed by long term cooling at Decay Heat Removal pressure of approximately 45 psig.

Since the Decay Heat System contains borated water of the Reactor Coolant System, leakage occurring from the section of piping between DH 11 and DH 12 will be evident from boric acid residue observed during walkdown of the piping.

The inservice examination of the welds will verify the structural integrity of the piping and the walkdown of the piping for evidence of boric acid will verify the leak-integrity of the piping.

Implementation Schedule:

The examination of the piping welds to DH 11 and DH 12 will be scheduled to meet the requirements of Table IWB-2412-1. The walkdown of the piping for evidence of boric acid residue will be performed at or near the end of the Inspection Interval.

FIRST ENERGY NUCLEAR OPERATING COMPANY
DAVIS-BESSE UNIT 1
THIRD 10-YEAR INTERVAL
RELIEF REQUEST RR-A7

System/Component(s) for Which Relief is Requested:

ASME Class 1 Reactor Coolant System small diameter (≤ 1 inch) vent, drain, and instrument piping

Code Requirement:

IWB-5222(b) of the 1995 Edition, 1996 Addenda of ASME Section XI requires the pressure retaining boundary during the system leakage test conducted at or near the end of each inspection interval be extended to all Class 1 pressure retaining components within the system boundary.

Code Requirement from Which Relief is Requested:

Relief is requested from performing the system leakage test of the Class 1 piping and valves downstream of the first isolation valve of small diameter (≤ 1 inch) vent, drain and instrument piping during the system leakage test conducted at or near the end of the inspection interval.

Basis for Relief:

Vent, drain, and instrument piping segments consist of two manually operated isolation valves separated by a short pipe nipple which is connected to the Reactor Coolant System by another short pipe nipple. Manually operated isolation valves provide double isolation of the Reactor Coolant System and are closed during normal operating conditions.

The System Leakage Test is performed in Mode 3 with the Reactor Coolant System at full temperature and pressure. Performance of the System Leakage Test conducted at or near the end of the interval requires the first isolation valve be opened to pressurize the piping between the first and second isolation valves. Following completion of the test, the first isolation valve must then be closed to restore the double isolation of the Reactor Coolant System. FENOC proposes to perform the system leakage test of the Reactor Coolant System conducted at or near the end of the interval with the first isolation valve in its normal closed position. This will still provide an acceptable level of quality and safety based on the following.

1. ASME Section XI paragraph IWA-4540 provides the requirements for the hydrostatic pressure testing of piping and components following repair/replacement. IWA-4540(b)(5) exempts component connections, piping, and associated valves that are nominal pipe size (NPS) 1 and smaller from system hydrostatic tests following repair/replacement.

2. The non-isolable portion of the Reactor Coolant System drain and vent connections will be pressurized and visually examined as required. Only the isolated portion of the small diameter drain and vent connections will not be pressurized.

3. The vent and drain piping and valves are nominally heavy wall (Schedule 160 pipe and 1500# valves) installed to the requirements of Subsection NB of ASME Section III.

The Davis-Besse Nuclear Power Station Technical Specifications (TS 3.4.6) require Reactor Coolant System leakage monitoring during normal operation (Modes 1, 2, 3, and 4). Should any of the Technical Specification limits be exceeded, corrective actions, including plant shutdown, are required to identify the source of leakage and restore the Reactor Coolant System boundary integrity.

Personnel safety and ALARA issues are also associated with pressurizing these connections. These issues are as follows:

1. Pressure testing these connections to the outboard isolation valve requires the inboard isolation valve be opened to subject the isolable portion of the piping to Reactor Coolant System nominal operating pressure and temperature. Opening this inboard isolation valve under Reactor Coolant System full temperature and temperature conditions is contradictory to the 10 CFR 50.55a(c)(2)(ii) requirement for double isolation of the Reactor Coolant System and thus creates the possibility for safety concerns for personnel performing the visual examination of the connections.

2. Performing the system leakage test with the inboard isolation valves open requires several man-hours to position the valves for the test and then to restore them after the test is complete. It is estimated that the dose associated with this valve alignment and realignment is approximately 0.4 man-rem.

The system leakage test is performed near the end of the outage at full temperature and pressure following completion of all Reactor Coolant System work. This system

leakage test is a critical path activity. To minimize the time the Reactor Coolant System does not have double isolation, the alignment and realignment of the isolation valves is performed immediately preceding and following the test. This activity directly adds to the time necessary to perform the system leakage test and the duration of the outage.

FENOC considers the requirement to pressurize the downstream portions of small diameter vent, drain, and instrument piping a burden that is not compensated by a significant increase in quality and safety. Therefore, relief from this requirement is requested in accordance with 10 CFR 50.55a(a)(3)(ii). A relief request for not pressurizing small diameter (≤ 1 inch) vent, drain, and instrument piping during the system hydrostatic test was previously submitted for the Second 10-Year Interval in Relief Request RR-A18.

Alternative Examination:

The System Leakage Test conducted at or near the end of the interval will be conducted with the small diameter (≤ 1 inch) vent, drain, and instrument piping in its normal operating condition.

Justification for the Granting of Relief:

The boundaries for the system leakage test conducted at or near the end of each inspection interval is extended to all Class 1 pressure retaining components within the system boundary. This boundary extends out to the second isolation valve on the Reactor Coolant System. In order to comply with the pressure and temperature of the Davis-Besse Unit #1 Technical Specifications, the plant must be in Mode 3 to obtain the necessary pressure. This requires valves to be in their normal position during heatup to Mode 3. Once the system leakage pressure is obtained, inboard valves which are normally closed must be opened to extend the examination boundary to the second isolation valve. Opening the inboard isolation valve is contrary to the double isolation valve philosophy of 10 CFR 50.55a. The small diameter vent, drain, and instrument piping have been installed in accordance with the requirements of Subsection NB of ASME Section III. As these stringent requirements provide assurance of the pressure boundary integrity of this piping, failure of this piping is highly unlikely.

Implementation Schedule:

The System Leakage Test with the Class 1 pressure boundary extended to all Class 1 pressure containing components will be conducted at or near the end of the Third 10-Year Inspection Interval.

FIRST ENERGY NUCLEAR OPERATING COMPANY
DAVIS-BESSE UNIT 1
THIRD 10-YEAR INTERVAL
RELIEF REQUEST RR-A8

System/Component(s) for Which Relief is Requested:

Reactor Vessel Flange to Shell Circumferential Weld (Weld Number RC-RPV-WR-19)

Code Requirement:

Paragraph I-2110 of Appendix I to the 1995 Edition, 1996 Addenda of ASME Section XI requires the examination of the Reactor Vessel-to-Flange Weld be conducted in accordance with Article 4 of Section V as supplemented by Table I-2000-1.

Code Requirement from Which Relief is Requested:

Relief to use the requirements of Appendix VIII of the 1995 Edition, 1996 Addenda of ASME Section XI using the Performance Demonstration Initiative (PDI) protocol during the 10-Year examination of the Reactor Vessel is requested.

Basis for Relief:

Paragraph I-2110 of Appendix I of the 1995 Edition, 1996 Addenda of ASME Section XI requires ultrasonic examination procedures, equipment, and personnel used for reactor vessel shell welds be qualified by performance demonstration in accordance with Appendix VIII. However, this paragraph excludes reactor vessel to flange welds from the qualification requirements of Appendix VIII.

The configuration of the Davis-Besse Nuclear Power Station Reactor Vessel Flange to Shell Weld permits full examination coverage of the weld from both sides of the weld using the same ultrasonic scanning equipment and techniques as used for the vessel shell to shell welds. This equipment is qualified to examine the Reactor Vessel Flange to Shell Weld as well as the reactor vessel shell welds to the requirements of Supplements 4 and 6 of Appendix VIII using the PDI protocol.

Examination utilizing Appendix VIII in lieu of Article 4 of ASME Section V provides a more effective examination that has been proven through the PDI qualification process to detect flaws which could affect the integrity of the reactor vessel. This is substantiated in the Backfit Analysis for the Federal Register (FR-99-24256)

amendment to 10 CFR 50.55a, which states that examinations performed to Appendix VIII as modified by the PDI program greatly increases the reliability of the detection and sizing of cracks and flaws.

Relief is requested in accordance with 10 CFR 50.55a(a)(3)(i). The examination of the Reactor Vessel Flange to Shell Weld to the requirements of Appendix VIII using the PDI protocol will provide an increase in the level of quality and safety. A relief request to utilize Appendix VIII for the Reactor Vessel flange-to-shell weld was previously submitted for the Second 10-Year Interval in Relief Request RR-A18.

Alternative Examination:

The Reactor Vessel Flange-to-Shell Circumferential Weld (Weld Number RC-RPV-WR-19) will be examined in accordance with the requirements of Supplements 4 and 6 of Appendix VIII of the 1995 Edition, 1996 Addenda of ASME Section XI using the Performance Demonstration (PDI) protocol.

Justification for the Granting of Relief:

Appendix I of the 1995 Edition, 1996 Addenda of ASME Section XI excludes the reactor vessel to flange welds from the qualification requirements of Appendix VIII. The configuration of the Davis-Besse Nuclear Power Station Reactor Vessel Flange to Shell Weld permits examination of the weld with ultrasonic scanning equipment and techniques qualified to the requirements of Supplements 4 and 6 of Appendix VIII using the PDI protocol. The use of PDI qualification process will greatly enhance the overall level of assurance of the reliability of ultrasonic examination techniques in detecting and sizing flaws.

Implementation Schedule:

The Reactor Vessel Flange-to-Shell weld will be examined during the 10-Year examination of the Reactor Vessel at or near the end of the Third 10-Year Inspection Interval.

FIRST ENERGY NUCLEAR OPERATING COMPANY
DAVIS-BESSE UNIT 1
THIRD 10-YEAR INTERVAL
RELIEF REQUEST RR-A9

System/Component(s) for Which Relief is Requested:

Five Pressurizer Nozzle to Vessel Welds - Examination Category B-D, Item No. B3.120 (Nozzle Inside Radius Section)

- 3 - Pressurizer Relief Nozzle Inside Radius Sections
- 1 - Pressurizer Spray Nozzle Inside Radius Section
- 1 - Pressurizer Surge Nozzle Inside Radius Section

Six Steam Generator (Primary Side) Nozzle to Vessel Welds - Examination Category B-D, Item No. B3.140 (Nozzle Inside Radius Section)

- 2 - Steam Generator Inlet Nozzle Inside Radius Sections
- 4 - Steam Generator Outlet Nozzle Inside Radius Sections

Code Requirement:

Examination Category B-D, Code Item B3.120 of Table IWB-2500-1 of the 1995 Edition, 1996 Addenda of ASME Section XI requires a volumetric examination of Pressurizer Nozzle Inside Radius Sections. Figure IWB-2500-7(a) depicts the examination volume for the inside radius section.

Examination Category B-D, Code Item B3.140 of Table IWB-2500-1 of the 1995 Edition, 1996 Addenda of ASME Section XI requires a volumetric examination of Steam Generator Nozzle Inside Radius Sections. Figure IWB-2500-7(a) depicts the examination volume for the inside radius section.

Code Requirement from Which Relief is Requested:

Relief is requested from performing the volumetric examination of the inside radius sections of the Pressurizer and Steam Generator inside radius sections.

Basis for Relief:

Code Case N-619, Alternative Requirements for Nozzle Inner Radius Inspections for Class 1 Pressurizer and Steam Generator Nozzles, was approved by the ASME Boiler and Pressure Vessel Code on February 15, 1999. The technical basis for this code case concluded that it was highly unlikely that the Pressurizer Relief Nozzles, Pressurizer

Spray Nozzle, Pressurizer Surge Nozzle, and the Steam Generator Primary Nozzles would fail under any anticipated service conditions. The report also performed a risk assessment that concluded that the failure probabilities were very low and the effect of performing inservice inspections was very small. The report also noted that to date no indications had been found during nozzle inside radius section inservice inspection examinations.

During the Davis-Besse Second 10-Year Interval, the Electric Power Research Institute (EPRI) NDE Center performed a review of the examination techniques used to examine the Class 1 Steam Generator and Pressurizer inside radius sections. This review concluded that the Davis-Besse examination techniques would ensure that greater than 90% of the inside radius examination volume would be interrogated during the inservice examinations. During the Davis-Besse Second 10-Year Interval, no indications were identified using these examination techniques.

The radiation dose in the areas of the Pressurizer and Steam Generator that contain these inside radius sections averages approximately 40 mR per hour resulting in an overall radiation exposure of approximately 2 Rem to perform the examinations.

Relief is request pursuant to 10 CFR 50.55a(a)(3)(i). Based on industry inspection results, an acceptable level of quality and safety can be maintained without the examination of these inside radius sections.

Alternative Examination:

The inside radius sections of the Pressurizer and Steam Generator nozzles will not be examined as permitted by Code Case N-619.

Justification for the Granting of Relief:

Bases on industry inspection results, fracture mechanics evaluations, and probabilistic risk assessment calculations, the ASME Section XI Code Committee has determined that the structural integrity of these nozzles would be not reduced if the inside radius examinations were eliminated. Therefore, an acceptable level of quality and safety will be maintained with the elimination of the examination of these nozzle inside radius sections.

Implementation Schedule:

No examinations of the inside radius sections of the Pressurizer and Steam Generator nozzles will be performed.

FIRST ENERGY NUCLEAR OPERATING COMPANY
DAVIS-BESSE UNIT 1
THIRD 10-YEAR INTERVAL
RELIEF REQUEST RR-A10

System/Component(s) for Which Relief is Requested:

Class 1, 2, and 3 Bolted Connections

Code Requirement:

IWA-5250(a)(2) of the 1995 Edition, 1996 Addenda of ASME Section XI requires that if leakage occurs at a bolted connection on other than a gaseous system, one of the bolts shall be removed, VT-3 examined, and evaluated in accordance with IWA-3100. The bolt selected shall be the one closest to the source of leakage.

Code Requirement from Which Relief is Requested:

Relief is requested from removing bolting and performing VT-3 examination of bolts when leakage is detected during system pressure tests. The requirements of Code Case N-566-1, Corrective Action for Leakage Identified at Bolted Connections, will be implemented.

Basis for Relief:

The removal of bolts for VT-3 visual examination is not always the most prudent action when leakage is discovered at a bolted connection. Leakage at bolted connections is typically identified during system leakage tests. For Class 1 systems, this leakage test is conducted prior to plant startup following each refueling outage. This test is performed at full operating pressure (2155 psig) and temperature. When leakage is discovered during this test, the corrective action (i.e. removal of bolts) must be performed with the system at full temperature and pressure or the plant must be cooled down. The removal of a bolt under full temperature and pressure conditions can be extremely physically demanding due to the adverse heat environment. Cooling down the plant subjects the plant to additional heatup and cooldown cycles and can add 3-4 days to the duration of a refueling outage. Bolted connections associated with pumps and valves are typically studs threaded into the body of the component. Removal of these studs is typically very difficult and time consuming due to length of time they have been installed and are often damaged during the removal process. This difficulty is compounded when the removal must be performed under heat stress conditions.

The requirements of IWA-5250(a)(2) must be applied regardless of the significance of the leakage or the corrosion resistance of the materials used in the bolted connection. Implementation of Code Case N-566-1 permits engineering judgement be used to evaluate the need for corrective action when leakage is discovered at a bolted connection. This code case permits factors such as the number and service age of the bolts, the bolting materials, the corrosiveness of the system fluid, the leakage location and system function, leakage history at the connections at the connection or at other system components, and visual evidence of corrosion at the bolted connection be used to evaluate the need for corrective measures.

Relief is request pursuant to 10 CFR 50.55a(a)(3)(i) as the application of Code Case N-566-1 will provide an acceptable level of quality and safety as an leakage at mechanical connections will be thoroughly evaluated for acceptability for continued service.

Alternative Examination:

When leakage is discovered at a bolted connection, the provisions of Code Case N-566-1 will be implemented.

Justification for the Granting of Relief:

Code Case N-566-1 provides alternatives to the removal of bolting from mechanical connections when leakage is discovered during a system pressure test. Factors such as the number and service age of the bolts, the bolting materials, the corrosiveness of the system fluid, the leakage location and system function, leakage history at the connections at the connection or at other system components, and visual evidence of corrosion at the bolted connection are used to determine the integrity of the bolted connection. These alternatives provide assurance of the integrity of the mechanical joint will be maintained.

Implementation Schedule:

Code Case N-566-1 will be implemented throughout the Third 10-Year Inspection Interval whenever leakage is discovered at a mechanical joint during the performance of system pressure tests.

FIRST ENERGY NUCLEAR OPERATING COMPANY
DAVIS-BESSE UNIT 1
THIRD 10-YEAR INTERVAL
RELIEF REQUEST RR-A11

System/Component(s) for Which Relief is Requested:

All components required to be examined under Table IWB-2500-1, IWC-2500-1, IWD-2500-1, IWE-2500-1, and IWF-2500-1 that are not allowed to be deferred.

Code Requirement:

Tables IWB-2412-1, IWC-2412-1, IWD-2412-1, IWE-2412-1, and IWF-2410-2 of the 1995 Edition, 1996 Addenda of ASME Section XI specifies the percent of examinations which must be completed during each inspection period when using Inspection Program B.

Code Requirement from Which Relief is Requested:

Relief is requested from the maximum percent of examinations which must be completed during each inspection period as specified in Tables IWB-2412-1, IWC-2412-1, IWD-2412-1, IWE-2412-1, and IWF-2410-2 of the 1995 Edition, 1996 Addenda of ASME Section XI.

Basis for Relief:

The Davis-Besse Nuclear Power Station (DBNPS) is on 2 year refueling cycles. Over the 10-Year inspection interval there would be a total of 5 refueling outages in which to accomplish the required examinations. During each of the 5 refueling outages it is desirable to perform approximately 20% of the examinations in order to distribute the examinations evenly between outages. For the Third 10-Year Inspection Interval, the DBNPS will have 2 outages during the first inspection period, 1 outage during the second inspection period, and 2 outages during the third inspection period. Applying the 20% completion percentage for each outage, 40% of the total inspection interval examinations would be completed during the first inspection period, 60% would be completed during the second inspection period and 100% would be completed by the end of the third inspection period. The maximum percentages which must be completed for each period as specified in Tables IWB-2412-1, IWC-2412-1, IWD-2412-1, IWE-2412-1, and IWF-2410-2 are 34% in the first period, 67% in the second period, and 100% at the end of the third period. Applying the 20% completion percentage would exceed the maximum completion percentage for the first inspection

period. Code Case N-598 provides alternative requirements for the maximum percent of examinations that may be credited during inspection periods. Code Case N-598 permits completion of 50% of the examinations by the end of the first inspection period.

The intent of Tables IWB-2412-1, IWC-2412-1, IWD-2412-1, IWE-2412-1, and IWF-2410-2 is to ensure that examinations are evenly distributed among the inspection periods and are not concentrated in any one inspection period.

Relief is requested in accordance with 10CFR50.55a(a)(3)(i). As the total number of examinations conducted during the 10-year inspection interval is unchanged, the overall level of quality and safety will be unaffected.

Alternative Examination:

Code Case N-598 will be used in lieu of the requirements of Tables IWB-2412-1, IWC-2412-1, IWD-2412-1, IWE-2412-1, and IWF-2410-2. Code Case N-598 allows 50% of the required examinations to be completed by the end of the first period and 75% by the end of the second inspection period.

Justification for the Granting of Relief:

The intent of Tables IWB-2412-1, IWC-2412-1, IWD-2412-1, IWE-2412-1, and IWF-2410-2 is to ensure that examinations are evenly distributed among the inspection periods and are not concentrated in any one inspection period. Application of the Code Case N-598 alternative requirements will permit examinations to be distributed across the available refueling outages and will provide an acceptable level of quality and safety.

Implementation Schedule:

Examinations during the Third 10-Year Inspection Interval will be scheduled to comply with the requirements of Code Case N-598.

FIRST ENERGY NUCLEAR OPERATING COMPANY
DAVIS-BESSE UNIT 1
THIRD 10-YEAR INTERVAL
RELIEF REQUEST RR-A12

System/Component(s) for Which Relief is Requested:

Reactor Vessel Shell-to-Flange Circumferential Weld (Weld Number RC-RPV-WR-19)

Code Requirement:

Table IWB-2500-1, Examination Category B-A, Note 3 requires that when using Inspection Program B, the shell-to-flange weld examination may be performed during the first and third periods, in which case 50% of the shell-to-flange weld shall be examined by the end of the first period, and the remainder by the end of the third period. During the first period, the examination need only be performed from the flange face, provided this same portion is examined from the shell during the third period.

Code Requirement from Which Relief is Requested:

Relief is requested from performing 50% of the Reactor Vessel shell-to-flange weld by the end of the first period.

Basis for Relief:

The Reactor Vessel Shell-to-Flange Weld (RC-RPV-WR-19) was examined in April, 2000, during the second 10-Year Reactor Vessel Examination. This examination was conducted from the Reactor Vessel shell with angles of 45° shear wave and a 45° longitudinal wave. Additionally, a 70° longitudinal wave was used for examining the near surface region. The weld was examined by scanning from four opposing beam directions such that all of the angle beams passed through the weld metal from each direction. The adjacent base metal was scanned from one direction perpendicular to the weld and from two directions parallel to the weld. This examination was in accordance with Supplements 4 and 6 of Appendix VIII to the 1995 Edition, 1996 Addenda of ASME Section XI as amended by 10 CFR 50.55a. There were no indications recorded during this examination. No welded repair/replacement activities have been performed on this weld during its inservice history.

The ASME Code Committee has approved code Case N-623. This code case permits the deferral of the shell-to-flange weld without conducting partial examinations from the flange face if the following conditions are met:

a) No welded repair/replacement activities have ever been performed on the shell-to-flange weld.

b) The shell-to-flange weld contains no identified flaws or relevant conditions that currently require successive inspections in accordance with IWB-2420(b).

c) The vessel is not in the first inspection interval.

Davis-Besse meets the conditions noted in Code Case N-623.

Relief is requested in accordance with 10 CFR 50.55a(a)(3)(i). The examination of the Reactor Vessel Flange to Shell Weld during the third inspection period will provide an acceptable the level of quality and safety.

Alternative Examination:

The examination of 50% of the weld from the flange face in the first inspection period will not be performed. The full volume of the Reactor Vessel Shell-to-Flange weld will be examined during the 10-year reactor vessel examination near the end of the interval.

Justification for the Granting of Relief:

The examination of the shell-to-flange weld will coincide with the examination of the remainder of the circumferential reactor vessel shell welds. As no indications have been found in previous examinations of this weld, examination of this weld at the same frequency as the remainder of the reactor vessel welds will provide an acceptable level of quality and safety.

Implementation Schedule:

The Reactor Vessel Shell-to-Flange Weld (RC-RPV-WR-19) will be examined during the 10-year reactor vessel examination near the end of the third inservice inspection interval.

FIRST ENERGY NUCLEAR OPERATING COMPANY
DAVIS-BESSE UNIT 1
THIRD 10-YEAR INTERVAL
RELIEF REQUEST RR-A13

System/Component(s) for Which Relief is Requested:

Class 1, 2, 3, and MC Components

Code Requirement:

IWA-4221(a) of the 1995 Edition, 1996 Addenda of ASME Section XI requires repair/replacement items meet the applicable Construction Code to which the original item was constructed. IWA-4421(b) further permits items used for repair/replacement to meet later Editions and Addenda of the Construction Code when reconciliation is performed.

IWA-4222(b) of the 1995 Edition, 1996 Addenda of ASME Section XI requires the administrative requirements of either the Construction Code of the item being replaced or the Construction Code of the item to be used for replacement be met. The administrative requirements include quality assurance, certification, Code Symbol Stamping, Data Reports, and Authorized Inspection.

ASME Section III, 1971 Edition and later Editions and Addenda, requires the supplier of pressure boundary materials be surveyed by the purchaser or hold the appropriate ASME Certificate of Authorization.

Code Requirement from Which Relief is Requested:

Relief is requested to use the requirements of Code Case N-528 as an alternative to the administrative requirements (i.e. source evaluation) of ASME Section III when purchasing, exchanging, or transferring pressure boundary material from another nuclear plant site.

Basis for Relief:

Code Case N-528 applies to metallic material (meeting the definition of IWA-9000) that is purchased, exchanged, or transferred between nuclear sites. Code Case N-528 provides alternatives to the administrative requirements of ASME Section III that refer to the survey by the purchaser or the possession of a Certificate of Authorization.

Code Case N-528 requires that material procured from another nuclear plant site:

1. Be furnished in accordance with the requirements of NA-3700/NCA-3800;

2. Have been maintained in accordance with the supplying nuclear plant's quality assurance program;

3. That the material has not been placed in service, welded, brazed, nor subjected to any operation that might affect the mechanical properties of the material;

4. Documentation required by NA-3700/NCA-3800 is provided with the material to the receiving plant;

5. And the procuring site has evaluated the material for its intended application, including any differences that might affect form, fit, or function.

Each nuclear site has a documented quality assurance program that meets the requirements of 10 CFR 50 Appendix B. Criterion VII of 10 CFR 50 Appendix B require, in part, that

> *"... measures shall be established to assure that purchased material, equipment, and services, whether purchased directly or through contractors and subcontractors, conform to the procurement documents. These measures shall include provisions, as appropriate, for source evaluation and selection, objective evidence of quality furnished by the contractor or subcontractor, inspection at the contractor or subcontractor source, and examination of products upon delivery. Documentary evidence that material and equipment conform to procurement requirements shall be available at the nuclear power plant or fuel reprocessing plant site prior to installation or use of such material and equipment. This documentary evidence shall be retained at the nuclear power plant or fuel reprocessing plant site and shall be sufficient to identify the specific requirements, such as codes, standards, or specifications, met by the purchased material and equipment."*

Code Case N-528 is limited to the purchase, exchange, or transfer of materials between nuclear plants. Code Case N-528 also requires that the material furnished by the supplying plant had been procured in accordance with the requirements of NA-3700/NCA-3800. Each nuclear power plant must have a NRC approved 10 CFR 50 Appendix B quality assurance program. Inherent in these programs are controls which will ensure the materials are stored properly and that traceability of material to its procurement and certification documentation is maintained. These programs are subjected to internal scrutiny by the nuclear plant owner and review by the NRC.

Code Case N-528 also requires that the supplying plant to furnish the documentation required by NA-3700/NCA-3800 and certify that the material had been purchased in accordance with NCA-3700/NCA-3800, had been maintained in accordance with the supplying plants quality assurance program, and that the material had not been subjected to any operation that might affect the mechanical properties of the material. Furthermore, the receiving plant must also perform evaluations to ensure the material is suitable for installation at the receiving plant as part of the reconciliation required by IWA-4220. These actions fulfil the source evaluation and documentary evidence requirements of Criterion VII of 10 CFR 50 Appendix B.

Relief is request in accordance with 10 CFR 50.55a(a)(3)(i). The procurement, exchange, or transfer of material between nuclear plant sites in accordance with Code Case N-528 will provide an acceptable level of quality and safety.

Alternative Examination:

Code Case N-528 will be implemented when it is necessary to purchase, exchange, or transfer material between nuclear plant sites.

Justification for the Granting of Relief:

Code Case N-528 provides an acceptable alternative to the administrative requirements of ASME Section III which require the supplier be surveyed by the purchaser or hold the appropriate ASME Certificate of Authorization. The code case requires that the material was originally procured in compliance with the ASME Code, Section III requirements, maintained in conformance with an approved 10 CFR 50 Appendix B program, and had not been subjected to any operation that might affect the mechanical properties of the material.

Code Case N-528 also requires the receiving utility to ensure the material is compatible in form, fit, and function with its intended application in addition to reconciliation requirements of IWA-4220.

These requirements provide reasonable assurance that the use of Code Case N-528 provides an acceptable level of quality and safety in accordance with 10 CFR 50.55a(a)(3)(i).

Implementation Schedule:

Code Case N-528 will be used when it is necessary to purchase, exchange or transfer material from another nuclear plant site during the Third 10-Year Inspection Interval.

FIRST ENERGY NUCLEAR OPERATING COMPANY
DAVIS-BESSE UNIT 1
THIRD 10-YEAR INTERVAL
RELIEF REQUEST RR-A14

System/Component(s) for Which Relief is Requested:

Calibration Blocks for Vessels Greater Than 2 Inches in Diameter, except for the Reactor Vessel

Code Requirement:

I-2120 of Appendix I of the 1995 Edition, 1996 Addenda of ASME Section XI requires the ultrasonic examination of vessels, other than the reactor vessel, greater than 2 inches in thickness be conducted in accordance with Article 4 of Section V, as supplemented by Table I-2000-1. Table I-2000-1 specifies that Supplement 1 to Appendix I is applicable to vessels greater than 2 inches in thickness.

Appendix I, Supplement 1(a) requires the material from which calibration blocks are fabricated be one of the following:

(1) a nozzle dropout from the component;

(2) a component prolongation: or

(3) material of the same material specification, product form, and heat treatment condition as one of the materials being joined.

Code Requirement from Which Relief is Requested:

Relief is requested to use Code Case N-639, Alternative Calibration Block Material, when calibration blocks of the same material specification, product form, and heat treatment condition as the material being examined are not available.

Basis for Relief:

The purpose of calibration blocks is to provide notches and holes of known sizes in materials which are acoustically similar to the material being examined. The calibration blocks are used to configure the ultrasonic examination system for the required examination and provide for repeatability of examinations.

The requirements of Appendix I, Supplement 1(a)(3) requires material of the same material specification, product form, and heat treatment condition as one of the materials being joined for the calibration block material. This requirement does not address the grade or type of material nor the heat treatment of the material. It only addresses the material specification and the heat treatment condition, e.g. quenched and tempered. The material grade or type and heat treatment are more important in determining the acoustic properties of a material than the materials specification and heat treatment condition. This is recognized in ASME Section V, Article V, T542.2.1.1 which requires the basic calibration block be fabricated from the same product form and material specification or equivalent P-Number grouping as the material being examined. ASME Section XI, Appendix III, III-3411(d) also permits the use of calibration blocks of similar chemical analysis, tensile properties, and metallurgical structure when material of the same specification is not available. The use of materials of similar chemical analysis, tensile properties, and metallurgical structure when calibration blocks of the same material specification, product form, and heat treatment condition as the material being examined is not available will provide materials with acoustic properties similar to those being examined.

Relief is request in accordance with 10 CFR 50.55a(a)(3)(i). The use of calibration blocks fabricated from material of similar chemical analysis, tensile properties, and metallurgical structure as the material being examined as permitted by Code Case N-639 will provide an acceptable level of quality and safety.

Alternative Examination:

The requirements of Code Case N-639 will be implemented when calibration blocks of the same material specification, product form, and heat treatment condition as the material being examined are not available for the examination of vessels greater than 2 inches in diameter, except for the Reactor Vessel.

Justification for the Granting of Relief:

Calibration blocks made from material of similar chemical analysis, tensile properties, and metallurgical structure as the material being examined will provide calibration blocks which have acoustic properties similar to the material being examined. Ultrasonic examinations conducted using calibration blocks which are acoustically similar to the material being examined will provide equivalent examinations to those conducted using calibration blocks meeting the requirements of ASME Section XI, Appendix I, Supplement 1(a). The use of the alternative material requirements contained in Code Case N-639 will provide an acceptable level of quality and safety.

Implementation Schedule:

Code Case N-639 will be used during the Third 10-Year Inspection Interval when calibration blocks meeting the requirements of ASME Section XI, Appendix I, Supplement 1(a) are not available.

FIRST ENERGY NUCLEAR OPERATING COMPANY
DAVIS-BESSE UNIT 1
THIRD 10-YEAR INTERVAL
RELIEF REQUEST RR-A15

System/Component(s) for Which Relief is Requested:

Dissimilar Metal Welds with single side access subject to ultrasonic examination with Supplement 10 to Appendix VIII of the 1995 Edition, 1996 Addenda of ASME Section XI.

The following ASME Class 1 dissimilar metal welds will be examined from one side only.

- RC-MK-A67-1-FW105A - Reactor Coolant Pump 2-1 Inlet Nozzle to 28 inch Elbow Weld
- RC-MK-A67-3-FW105B - Reactor Coolant Pump 1-2 Inlet Nozzle to 28 inch Elbow Weld
- RC-MK-A67-2-FW134A - Reactor Coolant Pump 2-2 Inlet Nozzle to 28 inch Elbow Weld
- RC-MK-B67-1-FW134B - Reactor Coolant Pump 1-1 Inlet Nozzle to 28 inch Elbow Weld

Austenitic stainless steel components with single side access subject to ultrasonic examination with Supplement 2 to Appendix VIII of the 1995 Edition, 1996 Addenda of ASME Section XI.

The following ASME Class 1 stainless steel welds will be examined from one side only.

- DH-33A-CCA-4-F6A-FW5 - Decay Heat Valve DH 12 to 12 inch Pipe Weld
- DH-33A-CCA-4-F6A-FW6 - Decay Heat Valve DH 11 to 12 inch Pipe Weld
- CF-33B-CCA-6-3-FW29 - Core Flood Valve CF 30 to 14 inch Elbow Weld
- CF-33B-CCA-6-5B-FW15 - Core Flood Valve CF 31 to 14 inch Elbow Weld

The following ASME Class 2 stainless steel welds will be examined from one side only.

- HP-33C-CCB-2-41-FW31 - High Pressure Injection Valve HP 49 to 2½ inch Pipe Weld
- HP-33C-CCB-2-35-FW22A - High Pressure Injection Valve HP 48 to 2½ inch Pipe Weld
- *DH-33B-GCB-10-21-FW66 - Decay Heat Valve DH 830 to 8 inch Pipe Weld
- *CS-34-GCB-5-2-FW6 - Containment Spray Valve CS 1531 to 8 inch Elbow Weld
- *DH-33A-GCB-7-5-FW20 - Decay Heat Valve DH 1517 to 12 inch Tee Weld
- *DH-33A-GCB-7-6-FW17 - Decay Heat Valve DH 1518 to 12 inch Pipe Weld

* These welds have a wall thickness less than 3/8 inch and are being examined as required by Relief Request RR-B2.

Code Requirement:

Subsection IWB, Table IWB-2500-1, Examination Category B-J, Item No. B9.31 (Branch Pipe Connection Welds NPS 4 or Larger) of the 1995 Edition, 1996 Addenda of ASME Section XI requires examination of essentially 100 percent of the weld.

Subsection IWC, Table IWC-2500-1, Examination Category C-F-1, Pressure Retaining Welds in Austenitic Stainless Steel or High Alloy Piping, of the 1995 Edition, 1996 Addenda of ASME Section XI requires examination of essentially 100 percent of the weld.

Code Case N-460 states that when the entire examination volume or area cannot be examined due to interference by another component or part geometry, a reduction in examination coverage may be accepted provided the reduction in coverage for that weld is less than 10 percent.

10 CFR 50.55a(b)(2)(xvi)(B) requires examinations performed from one side of a ferritic or stainless steel pipe weld must be conducted with equipment, procedures, and personnel that have demonstrated proficiency with single side examinations. To demonstrate proficiency to two sided examinations, the demonstration must be performed to the requirements of Appendix VIII as modified by this paragraph and 10 CFR 50.55a(b)(xv)(A).

10 CFR 50.55a(b)(2)(xv)(A) requires the following examination coverage when applying Supplement 2 and 3 to Appendix VIII of the 1995 Edition, 1996 Addenda of ASME Section XI.

(1) Piping must be examined in two axial directions and when examination in the circumferential direction is required, the circumferential examination must be performed in two directions, provided access is available.

(2) Where examination from both sides is not possible, full coverage credit may be claimed from a single side for ferritic welds. Where examination from both sides is not possible on austenitic welds, full coverage credit from a single side may be claimed only after completing a successful single sided Appendix VIII demonstration using flaws on the opposite side of the weld.

Code Requirement from Which Relief is Requested:

Relief is requested from performing a volumetric examination of essentially 100% of the weld length. When the examination area is limited to one side of an austenitic stainless steel weld, the examination coverage does not comply with 10 CFR 50.55a(b)(2)(xv)(A) and the proficiency demonstrations do not comply with 10 CFR 50.55a(b)(2)(xvi)(B). This results in a reduction in examination coverage of the weld which is greater than 10%.

Relief is also requested from the requirements of 10 CFR 50.55a(b)(2)(xv)(B) to demonstrate equivalency to two-sided examination procedures for the ferritic to cast stainless steel welds which have only single side access for the examination. This results in a reduction in examination coverage of the weld which is greater than 10%.

Basis for Relief:

Reactor Coolant Pump to Nozzle Welds

The Reactor Coolant Pump nozzle to elbow welds are dissimilar metal welds. The piping elbows are manufactured from ferritic steel while the Reactor Coolant Pumps are manufactured from cast stainless steel. Appendix VIII, Supplement 10 addresses ferritic to austenitic materials, but does not address ferritic to cast stainless steel welds. The examination of cast stainless steel is not addressed in Appendix VIII. Current technology is not capable of reliably performing ultrasonic examination of cast stainless steels. Therefore, credit can not be taken for examination from the cast side of the weld which limits examination credit to that obtained from the single sided examination from the ferritic piping. As a result the weld is examined by only 3 of the 4 required

directions as no scans can be credited from the cast stainless steel side of the weld. As the area of interest within the cast stainless steel is not interrogated, the examination coverage is approximately 40 percent of the required examination volume.

Valve to Piping Welds

The valve to piping welds addressed in this relief request are austenitic stainless steel welds. The valve taper prevents scanning from the valve side of the weld which results in a single side examination from the pipe side of the valve. For single sided examinations, 10 CFR 50.55a(b)(2)(xvi)(B) requires a procedure be qualified using flaws from the opposite side of the weld. There are currently no qualified single side examination procedures that demonstrate equivalency to two-sided examination procedures on austenitic piping welds. Current technology is not capable of reliably detecting or sizing flaws on the far side of an austenitic weld for configurations common to United States nuclear applications. As a result the weld is examined by only 3 of the 4 required directions as no scans can be credited from the valve side of the weld. As the area of interest within the valve is not interrogated, the examination coverage is approximately 40 percent of the required examination volume.

The Performance Demonstrative Initiative (PDI) Program conforms with 10 CFR 50.55a regarding single side access for piping. The PDI Performance Demonstration Qualification Summary (PDQS) certificates for austenitic piping list the limitation that single side examination is performed on a best effort basis. The best effort qualification is provided in place of a complete single side qualification to demonstrate that the examiners qualification and the subsequent weld examination is based on application of the best available technology.

Relief is request in accordance with 10 CFR 50.55a(a)(3)(ii). Technology is not currently available to qualify examination procedures for cast stainless steel and austenitic stainless steel welds from one side only.

Alternative Examination:

The best available techniques, as qualified through the Performance Demonstration Initiative, will be used from the accessible side of the weld on a best effort basis.

Justification for the Granting of Relief:

There are currently no qualified PDI single side examination procedures that demonstrate equivalency to two-sided examination procedures on austenitic piping or dissimilar ferritic to cast stainless steel welds. Current technology is not capable of reliably detecting or sizing flaws on the far side of an austenitic weld for configurations common to United States nuclear applications making examination from one side of the weld impractical. Examination 3 of the 4 required directions ensures that a portion the examination volume is interrogated which should detect any gross degradation of the weldment.

Implementation Schedule:

The examination of these welds will be scheduled to meet the requirements of Table IWB-2412-1.

FIRST ENERGY NUCLEAR OPERATING COMPANY
DAVIS-BESSE UNIT 1
THIRD 10-YEAR INTERVAL
RELIEF REQUEST RR-A16

System/Component(s) for Which Relief is Requested:

All components subject to ultrasonic examination in accordance with the 1995 Edition, 1996 Addenda of ASME Section XI, Appendix VIII

Code Requirement:

Paragraph VII-4240 of Appendix VII to the 1995 Edition, 1996 Addenda of ASME Section XI requires a minimum of 10 hours of annual training.

10 CFR 50.55a(b)(2)(xiv) requires that all personnel qualified for performing ultrasonic examinations in accordance with Appendix VIII shall receive 8 hours of annual hands-on training on specimens that contain cracks. This training must be completed no earlier than 6 months prior to performing ultrasonic examinations at a licensee's facility.

Code Requirement from Which Relief is Requested:

Relief is requested from the provisions of 10 hours of annual training contained in Paragraph VII-4240, Appendix VII of ASME Section XI.

Basis for Relief:

Paragraph VII-4240 requires 10 hours of annual training. 10 CFR 50.55a(b)(2)(xiv) requires that all personnel qualified for performing ultrasonic examinations in accordance with Appendix VIII shall receive 8 hours of annual hands-on training on specimens that contain cracks. This training must be completed no earlier than 6 months prior to performing ultrasonic examinations at a licensee's facility.

Paragraph 2.4.1.1.1 in the Federal Register (Volume 64, No. 183 dated September 22, 1999) contained the following statement,

> "The NRC had determined that this requirement (10 hours of training on an annual basis) was inadequate for two reasons. The first reason being that the training does not require laboratory work and examination of flawed specimens. Signals can be difficult to interpret and, as detailed in the

regulatory analysis for this rulemaking, experience and studies indicate that the examiner must practice on a frequent basis to maintain the capability for proper interpretation. The second reason is related to the length of training and its frequency. Studies have shown that an examiner's capability begins to diminish within approximately 6 months if skills are not maintained. Thus the NRC had determined that 10 hours of annual training is not sufficient practice to maintain skills, and that an examiner must practice on a more frequent basis to maintain proper skill level.... The PDI program has adopted a requirement for 8 hours of training, but it is required to be hands-on practice. In addition, the training must be taken no earlier than 6 months prior to performing examinations at a licensee's facility. PDI believes that 8 hours will be acceptable relative to an examiner's abilities in this highly specialized skill area because personnel can gain knowledge of new developments, material failure modes, and other pertinent technical topics through other means. These changes are reflected in 50.55a(b)(2)(xiv)".

Relief is requested in accordance with 10 CFR 50.55a(a)(3)(i). Implementation of the requirements contained in both paragraph VII-4240 of ASME Section XI and 10 CFR 50.55a will result in redundant systems. The use of the 10 CFR 50.55a requirements only will simplify record keeping, satisfy needs for maintaining skills, and provide an acceptable level of quality and safety.

Alternative Examination:

Annual ultrasonic training shall be conducted in accordance with 10 CFR 50.55a(b)(2)(xiv) in lieu of the 1995 Edition, 1996 Addenda of ASME Section XI, Appendix VII, Paragraph VII-4240.

Justification for the Granting of Relief:

Eight hours on annual hands-on training conducted no earlier than 6 months prior to performing ultrasonic examinations will ensure examiners maintain their proficiency in performing ultrasonic examinations in accordance with the requirements of Appendix VIII of ASME Section XI.

Implementation Schedule:

Personnel qualified for performing ultrasonic examinations in accordance with Appendix VIII during the Third 10-Year Inspection Interval will receive annual training in accordance with 10 CFR 50.55a(b)(2)(xiv) to maintain their examination qualifications.

FIRST ENERGY NUCLEAR OPERATING COMPANY
DAVIS-BESSE UNIT 1
THIRD 10-YEAR INTERVAL
RELIEF REQUEST RR-A17

System/Component(s) for Which Relief is Requested:

All components subject to VT-2 examinations during pressure tests.

Code Requirement:

IWA-2313 of the 1995 Edition, 1996 Addenda of ASME Section XI requires personnel performing visual examinations or using other NDE methods not addressed in ASNI/ASNT CP-189 be qualified and certified to comparable levels of qualification as defined in ANSI/ASNT CP-189 and the Employer's written practice.

IWA-2314 of the 1995 Edition, 1996 Addenda of ASME Section XI requires personnel be certified in accordance with ANSI/ASNT CP-189, except that the ANST Level III Certificate is not required. Level I and Level II personnel shall be recertified by qualification examinations every 3 years. Level III personnel shall be recertified by qualification examinations every 5 years.

Code Requirement from Which Relief is Requested:

Relief is requested from the provisions of IWA-2313 and IWA-2314 for visual examination personnel performing VT-2 examinations. The requirements of Code Case N-546 will be implemented.

Basis for Relief:

The 1995 Edition, 1996 Addenda of ASME Section XI requires personnel conducting VT-2 examinations be qualified and certified to comparable levels of qualification as defined in ANSI/ASNT CP-189 and the Employer's written practice.

VT-2 examination is a straightforward examination for leakage. VT-2 examination does not require any special knowledge of technical principals underlying it performance. No special skills or technical training are required to observe leakage from a component or bubbles forming on a joint wetted with leak detection solution. As such, there is no need to subject VT-2 examination personnel to the same qualification and certification requirements as imposed on other nondestructive examination techniques.

Code Case N-546 provides alternative requirements for the qualification of VT-2 examination personnel. Code Case N-546 permits VT-2 examination personnel be qualified in accordance with the following requirements.

(a) At least 40 hr. plant walkdown experience, such as that gained by licensed and nonlicensed operators, local leak rate personnel, system engineers, and inspection and nondestructive examination personnel.

(b) At least 4 hr. of training on Section XI requirements and plant specific procedures for VT-2 visual examination.

(c) Vision test requirements of IWA-2331, 1995 Edition.

The requirements of Code Case N-546 are less burdensome than qualifying and maintaining the VT-2 certification program required by IWA-2313. Code Case N-546 makes it feasible to train and certify more highly qualified personnel to perform VT-2 examinations. Furthermore, it permits experienced personnel who are already required to perform other functions in the plant to perform the VT-2 examination during their normal duties which already includes the identification of leaking components that require maintenance. This would reduce the number of people who are required to enter radiological restricted areas, resulting in fewer plant workers exposed to potential radiation dose and keeping radiation exposure as low as reasonably achievable.

Relief is requested in accordance with 10 CFR 50.55a(a)(3)(i). Implementation of Code Case N-546 will ensure that experience and competent personnel examine systems for leakage. This will provide an acceptable level of quality and safety comparable to that which would be obtained by using personnel qualified to the comparable levels of qualification as defined in ANSI/ASNT CP-189.

Alternative Examination:

The requirements of Code Case N-546 will be used to qualify VT-2 examination personnel.

Justification for the Granting of Relief:

Code Case N-546 requires a minimum of 40 hours of plant walkdown experience. Experience in identifying equipment problems during walkdowns and knowledge of operating conditions will enhance the ability of plant personnel to locate leakage during VT-2 examinations. With the specified 4 hours of training on Section XI requirements and plant specific procedures for VT-2 examinations, the designated

plant personnel will understand how leaks should be identified and documented and be fully capable of performing VT-2 examinations. The use of the alternative requirements of Code Case N-546 for the qualification of VT-2 personnel will provide an acceptable level of quality and safety.

Implementation Schedule:

The requirements of Code Case N-546 may be used for the qualification of personnel performing VT-2 examinations required during the Third 10-Year Inspection Interval.

FIRST ENERGY NUCLEAR OPERATING COMPANY
DAVIS-BESSE UNIT 1
THIRD 10-YEAR INTERVAL
RELIEF REQUEST RR-A18

System/Component(s) for Which Relief is Requested:

ASME Class 1, 2, and 3 Snubbers requiring examination and testing in accordance with IWF-5200(a) and (b) and IWF-5300(a) and (b).

Code Requirement:

IWF-5200(a) of the 1995 Edition, 1996 Addenda of ASME Section XI requires preservice examinations be performed in accordance with ASME/ANSI OM, Part 4, using the VT-3 visual examination method described in IWA-2213.

IWF-5200(b) of the 1995 Edition, 1996 Addenda of ASME Section XI requires preservice tests be performed in accordance with ASME/ANSI OM, Part 4.

IWF-5300(a) of the 1995 Edition, 1996 Addenda of ASME Section XI requires inservice examinations be performed in accordance with ASME/ANSI OM, Part 4, using the VT-3 visual examination method described in IWA-2213.

IWF-5300(b) of the 1995 Edition, 1996 Addenda of ASME Section XI requires inservice tests be performed in accordance with ASME/ANSI OM, Part 4.

Table IWA-1600-1 of the 1995 Edition, 196 Addenda of ASME Section XI references the 1987 Edition with OMa-1988 of ASME/ANSI OM, Part 4. 10 CFR 50.55a(b)(3)(v) permits the use of the Subsection ISTD, Inservice Testing of Dynamic Restraints (Snubbers) In Light-Water Reactor Power Plants, of the ASME OM Code 1995 Edition up to and including the 1996 Addenda in lieu of the examination and testing requirements for snubbers contained in Section XI, IWF-5200(a) and (b) and IWF-5300(a) and (b).

Code Requirement from Which Relief is Requested:

Relief is requested from the provisions of IWF-5200(a) and (b) and IWF-5300(a) and (b) for the preservice and inservice examinations and tests of snubbers. Preservice and inservice examinations and tests of snubbers will be performed to the requirements of Davis-Besse Unit #1 Technical Specification 3/4.7.7.

Basis for Relief:

ASME Section XI, Subsection IWF-5200(a) and (b) and Subsection IWF-5300(a) and (b) of the 1995 Edition, 1996 Addenda specify that snubber examinations and tests be performed in accordance with the 1987 Edition with OMa-1988 of ASME/ANSI OM, Part 4. 10 CFR 50.55a(b)(3)(v) permits the use of the Subsection ISTD of the ASME OM Code 1995 Edition up to and including the 1996 Addenda in lieu of the 1987 Edition with OMa-1988 of ASME/ANSI OM, Part 4. Snubber examination and testing is currently performed in accordance with the Davis-Besse Unit #1 Technical Specifications. The Davis-Besse Unit #1 Technical Specifications meet the requirements of NRC Generic Letter 90-09, Alternative Requirements for Snubber Visual Inspection Intervals and Corrective Actions.

The requirements for the examination and testing of snubbers are similar in the Davis-Besse Unit #1 Technical Specifications and the 1995 Edition, 1996 Addenda of ASME/ANSI OM Code, Subsection ISTD. However, the Davis-Besse Unit #1 Technical Specifications provide more thorough examinations and tests than required by ASME/ANSI OM Code, Subsection ISTD in the following areas.

- Davis-Besse Unit #1 Technical Specification 3/4.7.7 currently addresses requirements for the examination of safety related snubbers. Similar requirements are contained in both the Technical Specifications and Subsection ISTD. However, the examination boundary specified in Subsection ISTD 2.1 includes only the snubber assembly from pin to pin, inclusive. The Davis-Besse Unit #1 Technical Specifications require examination of the snubber for visible indication of damage or inoperability and includes verification that the attachments to the foundation or supporting structure are secure. Verification that the attachments to the foundation or supporting structure are secure exceeds the examination requirements of Subsection ISTD and provides a more thorough examination than would be achieved through the implementation of Subsection ISTD.

- The Davis-Besse Unit #1 Technical Specifications are more comprehensive than Subsection ISTD. The snubbers examined and tested in accordance with the Davis-Besse Unit #1 Technical Specifications includes snubbers which are installed on non-safety related systems when their failure or failure of the system on which they are installed would have an adverse effect on safety-related systems during a dynamic event. Testing conducted under IWF-5000 would not include these non-safety related snubbers as they would not be within the ASME Section XI Class 1, 2, or 3 boundaries.

- Davis-Besse Unit #1 Technical Specification 3/4.7.7 also addresses requirements for the functional testing of safety related snubbers. The Davis-Besse Unit #1 Technical Specifications require a 10% representative sample of the snubbers be tested each refueling outage with each snubber requiring testing at least once every ten refueling outages. This is similar to the Subsection ISTD 10% sampling plan except that the ISTD sampling plan is a random selection. Use of the random selection process may result in a snubber not being tested at all over an extended period of time. Application of the Davis-Besse Unit #1 Technical Specification requirements ensure that each snubber will be functionally tested once every ten refueling outages.

- Davis-Besse Unit #1 Technical Specification 3/4.7.7 permits the grouping of snubbers based on physical characteristics and accessibility. Subsection ISTD also permits the grouping of snubbers based on design, application, size, or type into a Design Test Plan Group. Subsection ISTD 7 further requires the establishment of failure mode groups when test failures occur within a Design Test Plan Group. If the cause of the failure can be determined and the failure is determined to be isolated, no further testing is required of the test group when using Subsection ISTD. Per the Davis-Besse Unit #1 Technical Specifications, any failure, whether isolated or not, requires testing of an additional 10% of the snubbers within the failed snubber's group to ensure the acceptability of the snubber group. This testing continues in 10% increments until that additional 10% sample is acceptable. Using the Davis-Besse Unit #1 Technical Specifications, the acceptability of a snubber group is established through testing.

Relief is requested in accordance with 10 CFR 50.55a(a)(3)(i). Implementation of Davis-Besse Unit #1 Technical Specification 3/4.7.7 for the examination and functional testing of snubbers will provide an acceptable level of quality and safety comparable or greater than that which would be attained by using Subsection ISTD of the 1995 Edition, 1996 Addenda of the ASME OM Code.

Alternative Examination:

Snubber examinations and tests required by IWF-5200 (a) and (b) and IWF-5300 (a) and (b) of the 1995 Edition, 1996 Addenda of ASME Section XI will be performed in accordance with the Davis-Besse Unit #1 Technical Specifications.

Justification for the Granting of Relief:

The Davis-Besse Unit #1 Technical Specifications for snubber examinations and tests meet the requirements of NRC Generic Letter 90-09. The examinations required by the Technical Specifications will identify any snubbers that are damaged, degraded, or inoperable due to physical damage, leakage, corrosion, or environmental exposure. The functional tests required by the Technical Specifications provide confidence that the snubbers will operate within their design parameters. The Technical Specification examinations complemented by the functional testing requirements provide an acceptable level of quality and safety comparable or greater than that which would be attained by using Subsection ISTD of the 1995 Edition, 1996 Addenda of the ASME OM Code.

Implementation Schedule:

The examination and testing of snubbers will be performed in accordance with the schedule requirements contained within the Davis-Besse Unit #1 Technical Specifications.

FIRST ENERGY NUCLEAR OPERATING COMPANY
DAVIS-BESSE UNIT 1
THIRD 10-YEAR INTERVAL
RELIEF REQUEST RR-A19

System/Component(s) for Which Relief is Requested:

Snubbers requiring VT-3 examination in accordance with IWF-5200(a) and IWF-5300(a).

Code Requirement:

IWF-5200(a) of the 1995 Edition, 1996 Addenda of ASME Section XI requires preservice examinations be performed in accordance with ASME/ANSI OM, Part 4, using the VT-3 visual examination method described in IWA-2213. 10 CFR 50.55a(b)(3)(v) permits the use of the Subsection ISTD of the ASME OM Code 1995 Edition up to and including the 1996 Addenda in lieu of the 1987 Edition with OMa-1988 of ASME/ANSI OM, Part 4. 10 CFR 50.55a(b)(3)(v) also requires preservice examinations be performed using the VT-3 examination method described in IWA-2213. The Davis-Besse Unit#1 Technical Specifications are used to examine snubbers in lieu of the requirements of the 1987 Edition with Oma-1988 ASME/ANSI OM, Part 4 or Subsection ISTD of the ASME OM Code 1995 Edition up to and including the 1996 Addenda (See Relief Request RR-A18).

IWF-5300(a) of the 1995 Edition, 1996 Addenda of ASME Section XI requires inservice examinations be performed in accordance with ASME/ANSI OM, Part 4, using the VT-3 visual examination method described in IWA-2213. 10 CFR 50.55a(b)(3)(v) permits the use of the Subsection ISTD of the ASME OM Code 1995 Edition up to and including the 1996 Addenda in lieu of the 1987 Edition with OMa-1988 of ASME/ANSI OM, Part 4. 10 CFR 50.55a(b)(3)(v) also requires inservice examinations be performed using the VT-3 examination method described in IWA-2213. The Davis-Besse Unit#1 Technical Specifications are used to examine snubbers in lieu of the requirements of the 1987 Edition with Oma-1988 ASME/ANSI OM, Part 4 or Subsection ISTD of the ASME OM Code 1995 Edition up to and including the 1996 Addenda (See Relief Request RR-A18).

IWA-2313 of the 1995 Edition, 1996 Addenda of ASME Section XI requires personnel performing visual examinations or using other NDE methods not addressed in ASNI/ASNT CP-189 be qualified and certified to comparable levels of qualification as defined in ANSI/ASNT CP-189 and the Employer's written practice.

IWA-2314 of the 1995 Edition, 1996 Addenda of ASME Section XI requires personnel be certified in accordance with ANSI/ASNT CP-189, except that the ANST Level III Certificate is not required. Level I and Level II personnel shall be recertified by qualification examinations every 3 years. Level III personnel shall be recertified by qualification examinations every 5 years.

Code Requirement from Which Relief is Requested:

Relief is requested from the provisions of IWA-2313 and IWA-2314 for visual examination personnel performing VT-3 snubber examinations. The requirements of IWA-2317 of the 1998 Edition of ASME Section XI will be implemented.

Basis for Relief:

The 1995 Edition, 1996 Addenda of ASME Section XI requires personnel conducting VT-3 examinations be qualified and certified to comparable levels of qualification as defined in ANSI/ASNT CP-189 and the Employer's written practice.

IWA-2317 of the 1998 Edition of ASME Section XI provides alternative requirements for the qualification of VT-3 examination personnel. IWA-2317 permits VT-3 examination personnel be qualified in accordance with the following requirements.

(a) At least 40 hr. plant walkdown experience, such as that gained by plant personnel involved in installation, maintenance, or examination of pumps, valves, and supports, quality control personnel, and nondestructive examination personnel.

(b) At least 8 hr. of training in Section XI requirements and plant specific procedures for VT-3 visual examination.

(c) Vision test requirements of IWA-2321, 1998 Edition.

VT-3 examinations of snubbers are performed to identify any visible indication of damage or inoperability as required by the Davis-Besse Unit #1 Technical Specifications. This VT-3 examination also verifies that the attachments to the foundation or supporting structure are secure.

The alternative requirements for qualifying VT-3 personnel is limited to those personnel who have had previously experience in the installation of components subject to VT-3 examinations such as pumps, valves, and supports or have had previous quality control or nondestructive examination experience. This previous experience provides a basic knowledge of mechanical principles. This knowledge is

supplemented by training in specific ASME Section XI requirements and the specific Davis-Besse procedures for performing the examination of snubbers. This previous plant experience coupled with the required specific training provides for personnel who are knowledgeable in conditions which could affect the mechanical and structural conditions of components and any discontinuities, imperfections or other conditions which could affect the operability of the examined component.

The requirements of IWA-2317 are less burdensome than qualifying and maintaining the VT-3 certification program required by IWA-2313. IWA-2317 makes it feasible to train and qualify experienced personnel to perform VT-3 examinations.

Relief is requested in accordance with 10 CFR 50.55a(a)(3)(i). Implementation of IWA-2317 of the 1998 Edition of ASME Section XI will ensure that experience and competent personnel perform VT-3 examinations of snubbers. This will provide an acceptable level of quality and safety comparable to that which would be obtained by using personnel qualified to the comparable levels of qualification as defined in ANSI/ASNT CP-189.

Alternative Examination:

The requirements of IWA-2317 of the 1998 Edition of ASME Section XI will be used to qualify personnel performing VT-3 examination of snubbers.

Justification for the Granting of Relief:

IWA-2317 of the 1998 Edition of ASME Section XI requires a minimum of 40 hours of plant walkdown experience. With the specified 8 hours of training on Section XI requirements and plant specific procedures for the VT-3 examination of snubbers, the designated plant personnel will understand the attributes to be examined and documented and will be fully capable of performing VT-3 examinations. The use of the alternative requirements of IWA-2317 of the 1998 Edition of ASME Section XI for the qualification of VT-3 personnel will provide an acceptable level of quality and safety.

Implementation Schedule:

The requirements of the IWA-2317 of the 1998 Edition of ASME Section XI will be used for VT-3 examinations of snubbers required during the Third 10-Year Inspection Interval by IWF-5200(a) and IWF-5300(a).

FIRST ENERGY NUCLEAR OPERATING COMPANY
DAVIS-BESSE UNIT 1
THIRD 10-YEAR INTERVAL
RELIEF REQUEST RR-B1

System/Component(s) for Which Relief is Requested:

Decay Heat Removal Heat Exchanger E27-1 and E27-2

Code Requirement:

Subsection IWC, Table IWC-2500-1, Examination Category C-A, Item No. C1.10 of the 1995 Edition, 1996 Addenda of ASME Section XI requires a volumetric examination of essentially 100% of the weld length at a gross structural discontinuity such as shell to flange welds. The shell to flange weld is shown as Weld G on Drawing ISI-SK-050.

Code Case N-460 states that when the entire examination volume or area cannot be examined due to interference by another component or part geometry, a reduction in examination coverage may be accepted provided the reduction in coverage for that weld is less than 10 percent.

Code Requirement from Which Relief is Requested:

Relief is requested from performing a volumetric examination of essentially 100% of the weld length. The reduction in examination coverage of the weld is greater than 10%.

Basis for Relief:

Paragraph T-441.1, Article 4, Section V of the 1995 Edition, 1996 Addenda of ASME Section XI requires the examination volume be scanned with angle beam search units directed both at right angles to the weld axis and along the weld axis. Wherever feasible, each examination shall be performed in two directions. The adjacent base metal in the examination volume must be completely scanned by two angle beams, but need not be completely scanned by both angle beams from both directions. The examination volume for this weld is defined in Figure IWC-2500-1.

The examination of the Decay Heat Cooler shell-to-flange weld is limited by the taper of the flange at the interface with the weld, reinforcing plates at the cooler inlet and outlet nozzles, and an angle iron which supports a platform above the cooler. Each

Decay Heat Cooler has a reinforcing plate installed at the cooler inlet and outlet nozzles. These reinforcing plates extend to the edge of the weld which makes that portion of the weld (approximately 12 inches) inaccessible for volumetric examination from the shell side of the cooler. In addition, the angle iron support prohibits the scan on the weld from the shell side for approximately 14 inches. At the taper to weld interface, coupling is lost due to the transition from the flange to the weld.

As a result of these factors, approximately 80% of the weld volume is covered during the volumetric examination. The examination volume is examined in at least one direction to detect reflectors in both the parallel and transverse directions to the weld. This should detect any defects which may exist.

Relief is request pursuant to 10 CFR 50.55a(a)(3)(i) as the proposed examination will provide an acceptable level of quality and safety as reflectors orientated both parallel and transverse to the weld can be located. A relief request for this weld was previously approved for the Second 10-Year Interval in Relief Request RR-B1 (TAC Nos. M79034 and M77942).

Alternative Examination:

The shell-to-flange weld will be examined volumetrically to the extent possible. The area of the weld inaccessible due to the nozzle reinforcing plates will receive a surface examination as part of the reinforcing plate to vessel weld examination under Code Item C2.31.

Justification for the Granting of Relief:

The Decay Heat Cooler design makes the Code required volumetric examination impractical to perform. In order to examine the shell-to-flange weld to the extent required by the Code would require modification to the cooler as well as a platform which provides access above the cooler. Approximately 80% of the examination volume is examined. This limited examination, in conjunction with the Code-required surface examination of the nozzle reinforcing plates, and the system pressure tests will provide reasonable assurance that any unallowable flaws have not developed.

Implementation Schedule:

The examination of the Shell-to-Flange weld is schedule for the third period of the inspection interval.

FIRST ENERGY NUCLEAR OPERATING COMPANY
DAVIS-BESSE UNIT 1
THIRD 10-YEAR INTERVAL
RELIEF REQUEST RR-B2

System/Component(s) for Which Relief is Requested:

ASME Class 2 Emergency Core Cooling and Main Steam piping welds

Code Requirement:

Code Categories C-F-1 and C-F-2 of the 1995 Edition, 1996 Addenda of ASME Section XI require a surface and volumetric examination for piping welds greater than or equal to 3/8 inch nominal wall thickness for piping greater than 4 inch nominal pipe size. For High Pressure Injection Systems, a surface and volumetric examination is required for piping welds greater than 1/5 inch nominal wall thickness for piping greater than or equal to 2 inch nominal pipe size and less than or equal to 4 inch nominal pipe size.

Per Note 2 of C-F-1 and C-F-2, welds not exempted by IWC-1220 which do not meet the above criteria do not require nondestructive examination, but are required to be included in the total weld count to which the 7.5% sampling rate is applied.

Code Requirement from Which Relief is Requested:

Relief is requested from the minimum wall thickness requiring examination as specified in Code Categories C-F-1 and C-F-2.

Basis for Relief:

The piping in the Containment Spray Discharge, the Decay Heat Discharge, the Decay Heat Suction from the Reactor Coolant System Class 1 boundary, and the Main Steam Supply for the Auxiliary Feedwater Pumps from the Main Steam lines to the first isolation valve has a wall thickness less than 3/8 in. and greater than 1/5 inch. The piping in the Containment Spray Suction, the High Pressure Injection Suction, the High Pressure Injection Recirculation Line, the Decay Heat Suction from the Borated Water Storage Tank, and the Decay Heat Suction from the Emergency Sump has wall thickness less than 1/5 in.. This "thin wall" piping does not require any nondestructive examination under Code Categories C-F-1 or C-F-2.

When the selection criterion of C-F-1 and C-F-2 Note 2 is applied to these systems, approximately 93% of the Class 2 Decay Heat Discharge welds past the Containment isolation valves, approximately 26% of the High Pressure Injection Discharge, and approximately 11% of the Main Steam System welds receive a nondestructive examination per Examination Categories C-F-1 and C-F-2. These sampling rates exceed the 7.5% sampling rate established in ASME Section XI. In addition, the welds requiring examination in the Emergency Core Cooling Systems are concentrated in approximately 1/3 of the total welds in the systems. This distribution is such that the requirements of C-F-1 and C-F-2 Note 2 can not be met.

FENOC believes the "thin wall" portion of these systems is important enough to plant safety that appropriate nondestructive examination of their circumferential welds is warranted.

Volumetric examinations are not appropriate for all piping wall thickness. Code Case N-435-1 provides alternative ASME Section XI examination requirements for vessels with a wall thickness 2 in. or less. This Code Case states that a surface examination may be applied in lieu of volumetric examinations for vessels with a wall thickness 1/5 inch or less. The Code, therefore, has recognized that volumetric examination of welds with a wall thickness less than 1/5 inch to ASME Section XI requirements is impractical.

Relief is request pursuant to 10 CFR 50.55a(a)(3)(i) as the proposed examination will provide an acceptable level of quality and safety as inservice examinations will be conducted throughout entire systems rather than being concentrated in specific portions of these systems. A relief request for these welds was previously approved for the Second 10-Year Interval in Relief Request RR-B4 (TAC No. M87188).

Alternative Examination:

The minimum nominal wall thickness specified in Code Categories C-F-1 and C-F-2 will not be used to exclude welds from examination in the Containment Spray, Decay Heat, High Pressure Injection, or Main Steam systems. The following requirements will be used to establish examination requirements for C-F-1 or C-F-2 category welds in these systems.

- The 7.5% sampling rate will be applied to all welds not exempted by IWC-1220.
- Welds selected which meet the nominal wall thickness requirements of Code Categories C-F-1 and C-F-2 will receive a surface and volumetric examination.

- Welds in piping greater than NPS 4" with wall thickness between 1/5 in. and 3/8 in. will receive an augmented surface and volumetric examination.

- Welds in piping with wall thickness less than 1/5 in. will receive an augmented surface examination.

Justification for the Granting of Relief:

Volumetric examinations are used to determine if unanticipated degradation of piping is occurring due to such phenomena as erosion, corrosion, or cracking. The ASME Code only requires volumetric examination of those welds with a wall thickness equal to or greater than 3/8 inch for pipe diameters over 4 inches and those welds in High Pressure Injection systems with a wall thickness greater than 1/5 inch and pipe diameters equal to and between 2 to 4 inches. Applying the Code requirements would result in approximately 70% of the welds not exempted by IWC-1220 not receiving nondestructive examination.

In lieu of the Code requirements, all welds, not exempted by IWC-1220, will be in the population to which the Code required 7.5% sampling rate is applied. Those welds with a wall thickness greater than 1/5 inch are subjected to volumetric and surface examination while those with a weld thickness 1/5 inch or less are subjected to a surface examination. Application of this criteria to the entire population will ensure that the integrity of the Class 2 systems for piping of all wall thickness is evaluated. This will provide an acceptable level of quality and safety as the nondestructive examinations will evaluate the entire Class 2 system rather than only a portion of a system.

Implementation Schedule:

The examination of these welds will be scheduled to meet the requirements of Table IWB-2412-1.

FIRST ENERGY NUCLEAR OPERATING COMPANY
DAVIS-BESSE UNIT 1
THIRD 10-YEAR INTERVAL
RELIEF REQUEST RR-B3

System/Component(s) for Which Relief is Requested:

6 inch High Pressure Injection Pump Suction Nozzle to Casing Weld

4 inch High Pressure Injection Pump Discharge Nozzle to Casing Weld

Code Requirement:

Subsection IWC, Table IWC-2500-1, Examination Category C-G, Item No. C6.10 (Pump Casing Welds) requires a surface examination of all welds. In cases where multiple pumps are of similar design, size, function, and service, the welds in one pump may be selected.

Code Case N-460 states that when the entire examination area cannot be examined due to interference by another component or part geometry, a reduction in examination coverage may be accepted provided the reduction in coverage for that weld is less than 10 percent.

Code Requirement from Which Relief is Requested:

Relief is requested from performing a surface examination of essentially 100% of the weld length. The reduction in examination coverage of the weld is greater than 10%.

Basis for Relief:

The surface examination of the identified welds is limited by the component geometry such that the reduction in coverage is greater than 10 percent.

An integrally welded attachment is welded at the point where the suction and discharge nozzles attach to the High Pressure Injection Pump casing. This welded attachment covers a portion of the nozzle-to-casing welds.

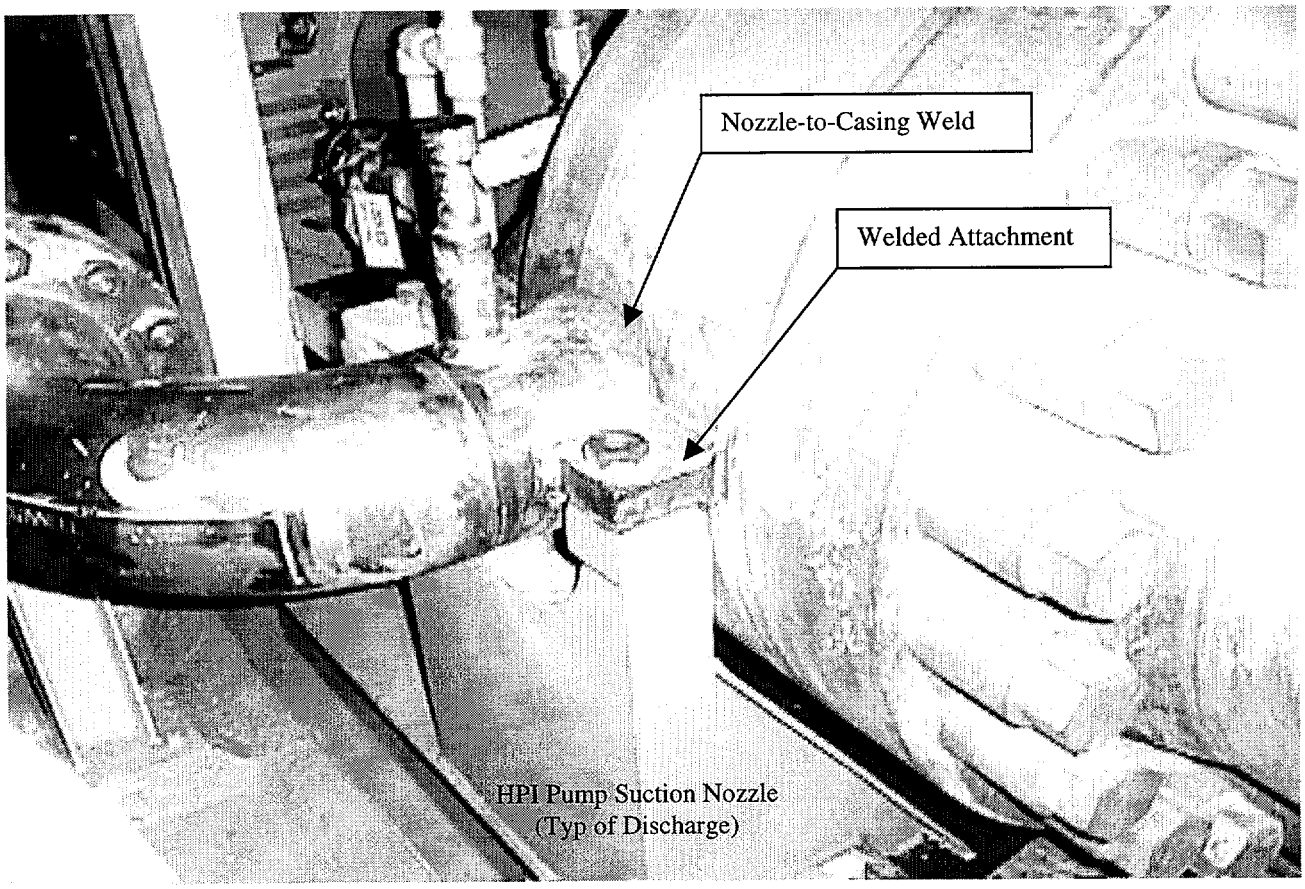

The circumference of the discharge nozzle to casing weld is approximately 21 inches. The attachment covers up approximately 4.75 inches of the discharge nozzle to casing weld. Therefore, approximately 77 percent of the examination area is available for examination.

The circumference of the suction nozzle to casing weld is approximately 14 inches. The attachment covers up approximately 4.75 inches of the suction nozzle to casing weld. Therefore, approximately 66 percent of the examination area is available for examination.

The discharge and suction nozzle welds on both High Pressure Injection Pumps are of similar design. Therefore, no other welds are available for examination.

Relief is request pursuant to 10 CFR 50.55a(a)(3)(i) as examination of the available surface area will provide an acceptable level of quality and safety. A relief request for

these welds was previously approved for the Second 10-Year Interval in Relief Request RR-B7 (TAC No. M93310).

Alternative Examination:

The available surface area of the High Pressure Injection Pump discharge and suction nozzle to casing welds will be surface examined to the maximum extent possible. The examination of pump casing-to-nozzle welds will be supplemented by the examination of the accessible surfaces of the pump support attachment welds as required by Code Category C-C.

Justification for the Granting of Relief:

The Code requires a 100% surface examination of the High Pressure Injection Pump casing welds. However, complete examination of the pump casing welds is prevented by integrally welded attachments that partially cover the welds and obstruct access for complete examination. Therefore, the Code requirement is impractical for these welds. To meet the Code requirements, the High Pressure Injection pumps or the integrally welded attachments would require extensive design modifications to allow access for examination.

In lieu of the Code requirement, the High Pressure Injection Pump nozzle casing welds will be examined to the extent practical which amounts to approximately 77% of the discharge nozzle weld and approximately 66% of the suction nozzle weld. This represents a substantial portion of the Code-required area and should detect any significant patterns of degradation that could occur.

Implementation Schedule:

The suction nozzle is scheduled to be examined in the second period and the discharge nozzle is scheduled to be examined in the third period of the inspection interval.

FIRST ENERGY NUCLEAR OPERATING COMPANY
DAVIS-BESSE UNIT 1
THIRD 10-YEAR INTERVAL
RELIEF REQUEST RR-B4

System/Component(s) for Which Relief is Requested:

1. Containment Penetration 33 - Containment Purge from Valve CV5005 to Valve CV5006 (Line HBB-17).

2. Containment Penetration 34 - Containment Purge from Valve CV5007 to Valve CV5008 (Line HBB-18).

Code Requirement:

Table IWC-2500-1, Examination Category C-H, Code Item No. C7.30 of the 1995 Edition, 1996 Addenda of ASME Section XI requires a system leakage test of piping once each inspection period.

Code Case N-522, Pressure Testing of Containment Penetration Piping, permits 10 CFR Appendix J testing to be used as an alternative to the rules in Table IWC-2500-1, Examination Category C-H for pressure testing piping that penetrates a containment vessel when the piping and isolation valves that are part of the containment system are Class 2 but the balance of piping is outside the scope of Section XI.

Code Case N-522 is endorsed in NRC Regulatory Guide 1.147 with limitations. These limitations are that the test should be conducted at the peak calculated containment pressure and the test procedure should permit the detection and location of through-wall leakage in containment isolation valves (CIVs) and pipe segments between the CIVs.

Code Requirement from Which Relief is Requested:

Portions of the piping segments between the containment isolation valves for Containment Purge Penetrations 33 and 34 are inaccessible. Relief is requested from the NRC Regulatory Guide 1.147 condition that the test procedure permit the location of through-wall leakage in pipe segments between containment isolation valves.

Basis for Relief:

Containment Purge Penetrations 33 and 34 are tested in accordance with 10 CFR Appendix J as permitted by Code Case N-522. If leakage is noted during the test, the test boundary is VT-2 examined with the soap bubble technique to verify the source of leakage is not through-wall leakage.

Rubber foam barriers and rubber boots installed around the pipe prohibit access to a portion of the pipe segment. The containment penetration sleeve also extends to within 3 inches of the containment isolation valve prohibiting access to a portion of the piping within the sleeve. Due to this configuration, it is not practical to use a soap bubble technique with the VT-2 visual examination along the entire length of the pipe. Even the removal of the fire penetration barriers and rubber boots would not allow for a complete soap bubble technique VT-2 visual examination due to the length of the pipe and lack of clearance between the pipe and penetration sleeve.

During normal operations, the containment purge valves are normally closed and the piping is subjected to atmospheric conditions. The inaccessible area contains only longitudinal welds. As these longitudinal welds area made during the pipe manufacturing process under controlled conditions, it is highly unlikely that inservice flaws would develop under the piping's normal service conditions.

Relief is request pursuant to 10 CFR 50.55a(a)(3)(i) as the VT-2 examination of the inaccessible portions of the Containment Purge piping is impractical to perform. A relief request for this piping was previously approved for the Second 10-Year Interval in Relief Request RR-B5 (TAC Nos. M79034 and M77942).

Alternative Examination:

Containment Purge Penetrations 33 and 34 will be tested in accordance with 10 CFR Appendix J as permitted by Code Case N-522. If leakage is noted during the test, the containment isolation valves and the accessible portions of the piping segment between the containment isolation valves will be VT-2 examined with the soap bubble technique to verify the source of leakage is not through-wall leakage.

Justification for the Granting of Relief:

The examination of the piping segment between the Containment Purge Valves is impractical due to access to the pipe within the penetration sleeve and the penetration rubber foam barriers and rubber boots surrounding the pipe. In order to perform the VT-2 examination to the entire piping segment between the containment isolation valves, the subject piping would require extensive design modifications. Due to the

service conditions of this piping it is highly unlikely that service induce flaws would occur in the inaccessible piping.

Implementation Schedule:

The Containment Purge Piping at containment penetrations 33 and 34 will be pressure tested in accordance with 10 CFR 50 Appendix J each inspection period.

FIRST ENERGY NUCLEAR OPERATING COMPANY
DAVIS-BESSE UNIT 1
THIRD 10-YEAR INTERVAL
RELIEF REQUEST RR-C1

System/Component(s) for Which Relief is Requested:

Hydrostatic Pressure Testing of Class 3 Systems - Request for Approval to use Code Case N-498-1

Code Requirement:

Table IWD-2500-1, Examination Category D-B of the 1995 Edition, 1996 Addenda of ASME Section XI requires hydrostatic pressure testing of pressure retaining Class 3 components each inspection interval.

Code Requirement from Which Relief is Requested:

Relief is request from performing the system hydrostatic test as required by Table IWD-2500-1, Examination Category D-B, Code Items D2.20, D2.40, D2.60, and D2.80, 1995 Edition, 1996 Addenda. Code Case N-498-1 which provides alternative rules for the 10-year system hydrostatic test will be used in lieu of the Examination Category D-B requirements.

Basis for Relief:

The 1998 Edition, Supplement 8 of the ASME Code Cases for Nuclear Components states that Code Case N-498-1 is only applicable up to and including the 1992 Edition with the 1993 Addenda of ASME Section XI. Code Case N-498-1 provides alternative requirements for the 10-year hydrostatic test Class 1, 2, and 3 Systems. Code Case N-498-1 has been approved by the NRC without limitations in NRC Regulatory Guide 1.147 Revision 12. As the Davis-Besse Third 10-Year Inservice Inspection Program is written to comply with the 1995 Edition, 1996 Addenda of ASME Section XI, Code Case N-498-1 cannot be applied.

The examination requirements in Table IWD-2500-1 for Examination Category D-B, All Pressure Retaining Components, in the 1992 Edition, 1993 Addenda of ASME Section XI are identical to those contained in the 1995 Edition, 1996 Addenda of ASME Section XI for Examination Category D-B. Therefore, Code Case N-498-1 which is applicable to the 1992 Edition, 1993 Addenda should also be applicable to the 1995 Edition, 1996 Addenda.

As noted in NRC Regulatory Guide 1.147, Revision 12, the NRC has found the use of Code Case N-498-1 technically acceptable. There are no limitations or exceptions noted to the Code Case in Regulatory Guide 1.147. Relief is request pursuant to 10 CFR 50.55a(a)(3)(i). The use of Code Case N-498-1 will provide an acceptable level of quality and safety.

Alternative Examination:

Code Case N-498-1 will be used as an alternative to the system hydrostatic test requirements of Category D-B of the 1995 Edition, 1996 Addenda of ASME Section XI.

Justification for the Granting of Relief:

The NRC has previously approved the use of Code Case N-498-1 for Class 3 systems in NRC Regulatory Guide 1.147 Revision 12. The applicability of Code Case N-498-1 up to and including the 1992 Edition with the 1993 Addenda of ASME Section XI is an administrative issue and has no effect on the technical basis regarding the acceptability of Code Case N-498-1. The use of Code Case N-498-1 will provide an acceptable level of quality and safety.

Implementation Schedule:

The system hydrostatic test of Class 3 systems will be conducted in accordance with Code Case N-498-1 at or near the end of the inspection interval or during the same inspection period in which the test was performed during the Second 10-Year Inspection Interval.

FIRST ENERGY NUCLEAR OPERATING COMPANY
DAVIS-BESSE UNIT 1
THIRD 10-YEAR INTERVAL
RELIEF REQUEST RR-E1

System/Component(s) for Which Relief is Requested:

Seals and gaskets of Class MC pressure retaining components, Examination Category E-D, Item Numbers E5.10 and E5.20 of IWE-2500, "Examination and Pressure Test Requirements," Table IWE-2500-1, ASME Section XI, 1992 Edition, 1992 Addenda.

Code Requirement:

IWE-2500, Table IWE-2500-1 requires seals and gaskets on airlocks, hatches, and other devices to be visually examined, VT-3, when disassembled.

Code Requirement from Which Relief is Requested:

Relief is requested from performing the Code-required visual examination, VT-3, on the above identified metal containment seals and gaskets.

Basis for Relief:

The penetrations discussed below contain seals and gaskets.

- Electrical Penetrations:

  Electrical penetrations use a header plate attached to a containment penetration nozzle flange with redundant O-rings between the header plate and flange face. Modules through which electrical conductors pass are installed in the header plate. One type, manufactured by Amphenol uses seals and gaskets to assure leak tight integrity. A second type, manufactured by Conax uses a set of compression fittings. Replacement modules for the Amphenol penetrations use a combination of O-rings and compression fittings. Each penetration is pressurized with dry nitrogen to maintain and monitor integrity and to prevent the intrusion of moisture into the penetration.

  These seals and gaskets cannot be inspected without disassembly of the penetration to gain access to the seals and gaskets.

- Containment Personnel, Equipment, and Emergency Escape Hatches
  The Personnel , Equipment, and Emergency Escape Hatches utilize an inner and outer door with gasket surfaces to ensure a leak tight integrity. These hatches also contain other gaskets and seals such as the handwheel shaft seals, electrical penetrations, blank flanges, and equalizing pressure connections that require disassembly to gain access to the gaskets and seals.

Seals and gaskets receive a 10 CFR 50 Appendix J, Type B test. As noted in 10 CFR 50 Appendix J, the purpose of Type B tests is to measure leakage of containment or penetrations whose design incorporates resilient seals, gaskets, sealant compounds, and electrical penetrations fitted with flexible metal seal assemblies. The seals and gaskets in these joints are therefore proven adequate through Appendix J testing.

The Equipment Hatch is removed during maintenance outages, when necessary, and during refueling outages. Prior to final closure, the hatch gaskets and door sealing face are inspected for damage that could prevent sealing. The Personnel Hatch and Emergency Escape Hatch are included in the Davis-Besse Nuclear Power Station (DBNPS) Preventive Maintenance Program. This program requires that the door gaskets be inspected for damage that could prevent sealing and be coated with an approved silicone lubricant to preserve their integrity. These inspections are performed each refueling outage. Prior to establishing containment integrity, the Equipment Hatch, Personnel Hatch, and the Emergency Escape Hatch are tested in accordance with 10 CFR 50 Appendix J to confirm their sealing capability.

When the electrical penetrations, airlocks and hatches containing seals and gaskets are tested in accordance with 10 CFR 50, Appendix J, degradation of the seal or gasket material would be revealed by an increase in the leakage rate. Corrective measures would be applied and the component retested. Repair or replacement of seals and gaskets is not subject to Code (1995 Edition, 1996 Addenda) rules in accordance with Paragraph IWA-4120(b)(5) of ASME Section XI.

The visual examination of seals and gaskets in accordance with IWE-2500, Table IWE-2500-1 is a burden without any compensating increase in the level of safety or quality.

Relief is requested in accordance with 10 CFR 50.55a(a)(3)(i). Testing the seals and gaskets in accordance with 10 CFR 50, Appendix J will provide adequate assurance of the leak-tight integrity of the seals and gaskets. A relief request for seals and gaskets was previously approved for the Second 10-Year Interval in Relief Request RR-E1 (TAC No. MA0414).

Subsection IWE of the 1998 Edition of ASME Section XI no longer requires the examination of seals and gaskets.

Alternative Examination:

The leak-tightness of seals and gaskets will be tested in accordance with 10 CFR 50, Appendix J.

Justification for the Granting of Relief:

The functionality of containment seals and gaskets is verified during the Type B testing required by 10 CFR 50, Appendix J. This testing provides an acceptable level of quality and safety in lieu of the Code required visual examinations.

Implementation Schedule:

The 10 CFR 50 Appendix J Type B testing is performed at least once each inspection interval.

FIRST ENERGY NUCLEAR OPERATING COMPANY
DAVIS-BESSE UNIT 1
THIRD 10-YEAR INTERVAL
RELIEF REQUEST RR-E2

System/Component(s) for Which Relief is Requested:

All Class MC, Subarticle IWE-2200(g), preservice examination requirements of reapplied painted or coated containments.

Code Requirement:

ASME Section XI, 1995 Edition, 1996 Addenda, Subsection IWE-2200(g) requires that when paint or coatings are reapplied, the condition of the new paint or coating shall be documented in the preservice examination records.

Code Requirement from Which Relief is Requested:

Relief is requested from the requirement to perform a preservice inspection of new paint or coatings.

Basis for Relief:

SECY 96-080, "Issuance of Final Amendment to 10CFR Section 50.55a to Incorporate by Reference the ASME Boiler and Pressure Code (ASME Code), Section XI, Division 1, Subsection IWE and Subsection IWL," dated April 17, 1996, response to Comment 3.2 about IWE-2200(g) states, "In the NRC's opinion, this does not mean that a visual examination must be performed with every application of paint or coating. A visual examination of the topcoat to determine the soundness and the condition of the topcoat should be sufficient." This is currently accomplished through the inspections performed by the Davis-Besse Nuclear Power Station (DBNPS) coating maintenance program.

The adequacy of applied coatings is verified through the inspections performed by the DBNPS coating maintenance program. The coatings on the interior surface of the containment vessel are considered nuclear safety related. The are applied and inspected in accordance with the NRC approved First Energy Nuclear Operating Company (FENOC) Quality Assurance Program. This program endorses NRC Regulatory Guide 1.54, 6/73, Quality Assurance Requirements for Protective Coatings Applied to Water-Cooled Nuclear Power Plants, and ANSI Standard N101.4-1972, Quality Assurance Protective Coatings Applied to Nuclear Facilities. The following

requirements are applicable for coatings applied to the interior surface of the containment vessel:

- The quality assurance requirements of Section 3 of ANSI N101.4 applicable to the coating manufacturer are imposed on the coating manufacturer through the procurement process.

- Coating application procedures are developed based on the manufacturer's recommendations for application of the selected coating systems.

- Coating applicators are qualified to demonstrate their ability to satisfactorily apply the coatings in accordance with the manufacturer's recommendations.

- Quality Control personnel perform inspections to verify conformance of the coating application procedures. Section 6 of ANSI N101.4 is used as a guideline in the establishment of the inspection program.

- Quality Control inspection personnel are qualified to the requirements of Regulatory Guide 1.58, Rev 1.

- Documentation demonstrating conformance to the above is maintained.

The condition of the coatings are examined every 4 to 6 years in accordance with 10CFR50.65, "Requirements for Monitoring Effectiveness of Maintenance at Nuclear Power Plants." The general visual examination required by IWE is also performed each inspection period. These periodic examinations will identify evidence of flaking, blistering, peeling, discoloration, or other signs of coating distress that might be indicative of degradation of the containment structural integrity.

Recording the condition of reapplied coating in the preservice record does not substantiate the containment structural integrity. Should deterioration of the coating in the reapplied area occur, the area will require additional evaluation regardless of the preservice record. Recording the condition of new paint or coating in the preservice records does not increase the level of quality and safety of the containment.

Relief is requested in accordance with 10 CFR 50.55a(a)(3)(i). The DBNPS coating maintenance program currently provides an adequate level of quality and safety. A relief request which eliminated the need for recording a preservice record of reapplied coatings was previously approved for the Second 10-Year Interval in Relief Request RR-E3 (TAC No. MA0414).

Subsection IWE of the 1998 Edition of ASME Section XI no longer requires a preservice record of reapplied coatings.

Alternative Examination:

Reapplied paint and coatings on the containment vessel will be examined in accordance with the DBNPS coatings program. Although repairs to paint or coatings are not subject to the repair/replacement rules of ASME XI (Inquiry 97-22), repairs to the primary containment boundary, if required, would be conducted in accordance with ASME Section XI Code rules.

Justification for the Granting of Relief:

The Code requirement to establish a preservice record is a duplication of requirements contained in the DBNPS Coating Program. The DBNPS Coating Program provides the inspections and quality assurance provisions for the application of coatings necessary for protecting the inside steel surfaces of the Davis-Besse containment vessel.

Implementation Schedule:

The provisions of the DBNPS Coating Program will be implemented whenever performing coating on the interior of the DBNPS Containment Vessel.

FIRST ENERGY NUCLEAR OPERATING COMPANY
DAVIS-BESSE UNIT 1
THIRD 10-YEAR INTERVAL
RELIEF REQUEST RR-E3

System/Component(s) for Which Relief is Requested:

All Class MC, Subarticle IWE-2500(b) visual examination per Table IWE-2500-1 of painted or coated containment components prior to removal of paint or coatings.

Code Requirement:

ASME Section XI, 1992 Edition, 1992 Addenda, Subarticle IWE-2500(b) requires that when paint or coatings are to be removed, the paint or coatings shall be visually examined in accordance with Table IWE-2500-1 prior to removal.

Code Requirement from Which Relief is Requested:

Subarticle IWE-2500(b) requires that when paint or coatings are to be removed, the paint or coatings shall be visually examined in accordance with Table IWE-2500-1 prior to removal.

Basis for Relief:

The Davis-Besse Nuclear Power Station (DBNPS) Coating Program is described in Relief Request RR-E2.

Paint and coatings are not part of the containment pressure boundary under current Code rules as they are not associated with the pressure retaining function of the component (Paragraph NE-2110 (b)(5) of ASME Section III). The interiors of containments are painted to prevent rusting. Neither paint nor coatings contribute to the structural integrity or leak tightness of the containment. Furthermore the paint and coatings on the containment pressure boundary were not subject to Code rules when they were originally applied and are not subject to ASME XI rules for repair or replacement in accordance with IWA-4111(b)(5). Degradation or discoloration of the paint or coating materials on containment would be an indicator of potential degradation of the containment pressure boundary. Additional measures would have to be employed to determine the nature and extent of any degradation, if present. The application of ASME XI rules for removal of paint or coatings when unrelated to a Section XI repair or replacement activity, is a burden without a compensating increase in quality or safety.

Relief is requested in accordance with 10 CFR 50.55a(a)(3)(i). The DBNPS Coating Program currently provides an adequate level of quality and safety. A relief request eliminated the need for visual examining coatings prior to their removal was previously approved for the Second 10-Year Interval in Relief Request RR-E4 (TAC No. MA0414).

Subsection IWE of the 1998 Edition of ASME Section XI no longer requires an examination of coatings prior to removal.

Alternative Examination:

The condition of the containment vessel base material will be verified prior to the application of new paint or coating as required by the DBNPS Coating Program. If degradation is identified, additional measures will be applied to determine if the containment pressure boundary is affected. Repairs to the primary containment boundary, if required, will be conducted in accordance with ASME Section XI Code rules.

Justification for the Granting of Relief:

The DBNPS Coating Program is adequate to monitor the proper removal of the old paint and application of new coatings. Performing the Code required examination prior to removal of the old paint and documenting its condition in addition to performing the inspections required by the DBNPS Coatings Program would be a burden without a compensating increase in quality or safety.

Implementation Schedule:

The provisions of the DBNPS Coating Program will be implemented whenever performing coating on the interior surface of the DBNPS Containment Vessel.

FIRST ENERGY NUCLEAR OPERATING COMPANY
DAVIS-BESSE UNIT 1
THIRD 10-YEAR INTERVAL
RELIEF REQUEST RR-E4

System/Component(s) for Which Relief is Requested:

All components subject to the rules and requirements for repair, replacement or modification of Class MC, IWE-5000 system pressure testing visual examination in accordance with the 1995 Edition, 1996 Addenda of ASME Section XI.

Code Requirement:

Paragraph IWE-5240, "Visual Examination," of the 1995 Edition, 1996 Addenda of ASME Section XI, requires that the requirements of Paragraph IWA-5240, "Visual Examination," for visual examination, VT-2, are applicable following repair, replacement, or modification.

Code Requirement from Which Relief is Requested:

Relief is requested from performing the VT-2 visual examination in connection with system pressure testing following repair, replacement or modification under Article IWE-5000, "System Pressure Tests."

Basis for Relief:

Repair/replacements are performed in accordance with the Davis-Besse Nuclear Power Station (DBNPS) repair/replacement program which specifies the repair methods and nondestructive examinations necessary to ensure the original quality and construction requirements of the containment vessel are met. The DBNPS Containment Vessel is a code stamped pressure vessel which was designed and constructed in accordance with the 1968 Edition including the Summer 1969 Addenda of ASME Section III, Subsection "B" for Nuclear Vessels.

Table IWE-2500-1, Examination Category E-P, identifies the examination method of 10CFR50, Appendix J following each repair, modification, or replacement. Paragraph IWE-5222 permits leakage tests for minor repair/replacement activities may be deferred to the next scheduled leakage test provided nondestructive examinations are performed in accordance with the repair/replacement plan. These nondestructive examinations would be required to meet the construction code requirements, which would require volumetric or surface examinations based on the type of repair.

Paragraph IWE-5210 states that except as noted within Paragraph IWE-5240, "Visual Examination," the requirements of Article IWA-5000 are not applicable to Class MC or Class CC components. Paragraph IWE-5240 states that the requirements of Paragraph IWA-5240 for visual examinations are applicable. Paragraph IWA-5240 addresses VT-2 visual examination requirements. These requirements are written to apply to systems containing fluids. The VT-2 examination requires access to the repaired area during performance of the pressure test. Access to the repaired area may not be available if the repaired area is on the interior surface of the containment vessel if a 10 CFR 50 Appendix J Type A test is performed. If the repaired area is subjected to a localized 10 CFR 50 Appendix J pressure test, the repaired area would be covered by the test fixture and not available for visual examination. Paragraph IWA-2211 defines a VT-1 visual examination as an examination conducted to detect discontinuities and imperfections on the surfaces of components, including such conditions as cracks, wear, corrosion, or erosion. Paragraph IWA-2213 defines a VT-3 visual examination as an examination conducted to determine the general mechanical and structural condition of components.

The performance of VT-1 and VT-3 examinations are more appropriate than a VT-2 examination during a 10 CFR 50 Appendix J test. Following a repair/replacement activity affecting the containment pressure boundary when a 10 CFR 50 Appendix J test is performed to verify the leak tight integrity of the containment pressure boundary, a VT-3 visual examination would be appropriate. As the 10 CFR 50 Appendix J test will confirm the pressure boundary integrity, a VT-3 examination on the area affected by the repair/replacement activity performed either during or after the pressure test would be appropriate to verify if any conditions exist which could affect the future leak tightness of the containment vessel. If the 10 CFR 50 Appendix J test is deferred as permitted by IWE-5222, a more detailed VT-1 examination of the area affected by the repair/replacement would be appropriate to identify any conditions which could affect the leak tightness of the containment vessel.

Relief is requested in accordance with 10 CFR 50.55a(a)(3)(i). Performance of VT-1 or VT-3 examinations will provide an acceptable level of quality and safety.

Alternative Examination:

Following a repair/replacement activity affecting containment pressure boundary when a 10 CFR 50 Appendix J test is performed to verify the leak tight integrity of the affected containment pressure boundary, a VT-3 examination will be performed during or after the pressure test on the areas affected by the repair/replacement activity.

Following a repair/replacement activity affecting containment pressure boundary when

a 10 CFR 50 Appendix J test is deferred, a VT-1 examination will be performed on the areas affected by the repair/replacement activity. When the deferred pressure test is performed, a VT-3 will be performed a noted above.

Justification for the Granting of Relief:

The Code required VT-2 examination requires access to the repaired area during performance of the pressure test. Access to the repaired area may not be available if the repaired area is on the interior surface of the containment vessel during a full scale 10 CFR 50 Appendix J Type A test. If the repaired area is subjected to a localized 10 CFR 50 Appendix J pressure test, access is not available as the test fixture will cover the area affected by the repair/replacement activity. The VT-2 examination is performed to confirm the leak tightness of the area of repair/replacement.

Following a repair/replacement activity affecting the containment pressure boundary when a 10 CFR 50 Appendix J test is performed to verify the leak tight integrity of the containment pressure boundary, a VT-3 visual examination is proposed. In this case, the 10 CFR 50 Appendix J test will confirm the pressure boundary integrity. The VT-3 examination on the area affected by the repair/replacement activity will verify if any conditions exist which could affect the future leak tightness of the containment vessel. As pressure is not a factor in performing the VT-3 examination, it can be performed either during or after the 10 CFR 50 Appendix J test. If the 10 CFR 50 Appendix J test is deferred as permitted by IWE-5222, a more detailed VT-1 examination of the area affected by the repair/replacement would be appropriate to identify any conditions which could affect the leak tightness of the containment vessel prior to its testing per the requirements of 10 CFR 50 Appendix J.

The VT-1 or VT-3 visual examinations in conjunction with the nondestructive examinations required by the repair/replacement plan will ensure that an acceptable level of safety and quality will be attained.

Implementation Schedule:

The VT-1 or VT-3 examinations will be performed when repair/replacement activities are performed on the containment pressure boundary during the inspection interval.

FIRST ENERGY NUCLEAR OPERATING COMPANY
DAVIS-BESSE UNIT 1
THIRD 10-YEAR INTERVAL
RELIEF REQUEST RR-E5

System/Component(s) for Which Relief is Requested:

All Class MC, Paragraphs IWE-2420(b) and IWE-2420(c) successive examination requirements for components found acceptable for continued service.

Code Requirement:

Paragraphs IWE-2420(b) and IWE-2420(c) of the 1995 Edition, 1996 Addenda of ASME Section XI, requires that when a component is acceptable for continued service or when the examinations result in a repair/replacement activity, the areas containing such flaws, degradation, or repairs shall be reexamined during the next inspection period listed in the schedule of the inspection program of Paragraph IWE-2411, "Inspection Program A," or Paragraph IWE-2412, "Inspection Program B," in accordance with Table IWE-2500-1, Examination Category E-C.

Code Requirement from Which Relief is Requested:

Relief is requested from the requirement of Paragraphs IWE-2420(b) and IWE-2420(c) to perform successive examination of repairs/replacements.

Basis for Relief:

The purpose of a repair/replacement is to restore the component to an acceptable condition for continued service in accordance with the acceptance standards of Article IWE-3000. Paragraph IWA-4160, "Verification of Acceptability," requires the Owner to conduct an evaluation of the suitability of the repair/replacement including consideration of the cause of failure.

If the repair/replacement has restored the component to an acceptable condition, successive examinations are not warranted. If the repair/replacement was not suitable, then the repair/replacement does not meet code requirements and the component is not acceptable for continued service. Neither Paragraph IWB-2420(b), Paragraph IWC-2420(b), nor Paragraph IWD-2420(b) requires a repair to be subject to successive examination requirements. Furthermore, if the repair area is subject to accelerated degradation, it would still require augmented examination in accordance with Table IWE-2500-1, Examination Category E-C. The successive examination of repairs in

accordance with Paragraphs IWE-2420(b) and IWE-2420(c) constitutes a burden without a compensating increase in quality or safety.

In SECY 96-080, "Issuance of Final Amendment to 10CFR Section 50.55a to Incorporate by Reference the ASME Boiler and Pressure Vessel Code (ASME Code), Section XI, Division 1, Subsection IWE and Subsection IWL," dated April 17, 1996, the response to comment # 3.3, states "The purpose of IWE-2420(b) is to manage components found to be acceptable for continued service (meaning no repair or replacement at this time) as an Examination Category E-C component... If the component had been repaired or replaced, then the more frequent examination would not be needed."

Relief is requested in accordance with 10 CFR 50.55a(a)(3)(ii). Compliance with the specified requirements of this section would result in hardship or unusual difficulty without a compensating increase in the level of quality and safety. A relief request eliminating the successive examination requirements for repairs was previously granted for the Second 10-Year Interval in Relief Request RR-E6 (TAC No. MA0414).

Subsection IWE of the 1998 Edition of ASME Section XI no longer requires successive examination of areas that have been repaired/replaced.

Alternative Examination:

Successive examinations in accordance with Paragraphs IWE-2420(b) and IWE-2420(c) are not required for repairs made in accordance with Article IWA-4000.

Justification for the Granting of Relief:

Since IWA-4160 of the Code requires the suitability of the repairs/replacement including its cause, successive examination of the repair/replacement does not provide an additional safety benefit. This is consistent with the requirements of ASME Class 1, 2, and 3 systems in which successive examinations are only required when an item is accepted by evaluation.

Implementation Schedule:

Successive examinations will be performed in accordance with IWE 2420(b) and IWE-2420(c) whenever flaws or areas of degradation requiring evaluation in accordance with IWE-3000 are accepted for continued service without any repair/replacement activity.

FIRST ENERGY NUCLEAR OPERATING COMPANY
DAVIS-BESSE UNIT 1
THIRD 10-YEAR INTERVAL
RELIEF REQUEST RR-E6

System/Component(s) for Which Relief is Requested:

Class MC pressure retaining bolting.

Code Requirement:

ASME Section XI, 1995 Edition with the 1996 Addenda, Table IWE-2500-1, Examination Category E-G, Pressure Retaining Bolting, Item 8.20.

Code Requirement from Which Relief is Requested:

Relief is requested from ASME Section XI 1992 Edition, 1992 Addenda, Table IWE-2500-1 Examination Category E-G, Pressure Retaining Bolting, Item 8.20. Table IWE-2500-1 requires bolt torque or tension test on bolted connections that have not been disassembled and reassembled during the inspection interval. Code Case N-604 will be used in lieu of the requirements of Table IWE-2500-1, Examination Category E-G, Item E8.20.

Basis for Relief:

Code Case N-604 provides requirements, which may be used in lieu of the requirements of Table IWE-2500-1, Examination Category E-G, Item E8.20. Note 5 of Table IWE-2500-1, Examination Category E-G requires bolt torque or tension testing on bolted connections that have not been disassembled and reassembled during the inspection interval. Determination of the torque or tension value would require that the bolting be un-torqued and then re-torqued or re-tensioned.

Code Case N-604 states that the following examinations may be performed to satisfy the inservice inspection requirements for pressure retaining bolting.

(a) Exposed surfaces of bolted connections shall be visually examined in accordance with requirements of Table IWE-2500-1, Examination Category E-G, Item B8.10.
(b) Bolting connections shall meet the pressure test requirements of Table IWE-2500-1, Examination Category E-P, Item E9.40.

Each containment penetration receives a 10CFR50 Appendix J, Type B test in accordance with the specified testing frequencies. As noted in 10CFR50 Appendix J, the purpose of Type B tests is to measure leakage of containment penetrations whose design incorporates resilient seals, gaskets, sealant compounds, and electrical penetrations fitted with flexible metal seal assemblies. The performance of the Type B test itself proves that the bolt torque or tension remains adequate to provide a leak rate that is within acceptable limits. The torque or tension value of bolting only becomes an issue if the leak rate is excessive. Once a bolt is torqued or tensioned, it is not subject to dynamic loading that could cause it to experience significant change. Only bolting which would be subject to pressure loading which would tend to induce tension in bolts under accident conditions changes (i.e. pressure-unseating containment penetrations) would be expected to affect the preload of bolting. Davis-Besse has no pressure-unseating bolting as blank flanges are installed on both the interior and exterior flanges on penetrations not in use during normal operation. Penetrations which are pressurized, such as electrical penetrations, are not considered to be pressure-unseating penetrations. Appendix J testing and visual inspection is adequate to demonstrate that the design function is met. Torque or tension testing is not required on any other ASME Section XI, Class 1, 2, or 3 bolted connections or their supports as part of the inservice inspection program.

Relief is requested in accordance with 10 CFR 50.55a(a)(3)(ii). Un-torquing and subsequent retorquing of bolted connections which are verified not to experience unacceptable leakage through 10CFR50, Appendix J, Type B testing results in hardship or unusual difficulty without a compensating increase in the level of quality and safety. A relief request for not performing bolt torque or tension tests was previously granted for the Second 10-Year Interval in Relief Request RR-E6 (TAC No. MA0414).

The requirement to perform bolt torque or tension tests is not required in Subsection IWE of the 1998 Edition of ASME Section XI.

Alternative Examination:

The requirements of Code Case N-604 will be implemented.

Justification for the Granting of Relief:

The only bolting in which the torque value of bolting would be affected is that bolting which is subjected to tension. This bolting would be that installed in penetrations which are pressure unseating. Davis-Besse has no pressure unseating bolting. The torque or tension testing of bolts required by Examination Category E-G, when the

bolts are not disassembled, will result in a hardship without a commensurate increase in the level of safety or quality.

Implementation Schedule:

No torque or tension testing of bolting will be performed during the inspection interval.

FIRST ENERGY NUCLEAR OPERATING COMPANY
DAVIS-BESSE UNIT 1
THIRD 10-YEAR INTERVAL
RELIEF REQUEST RR-E7

System/Component(s) for Which Relief is Requested:

All components subject to examination in accordance with Subsection IWE of the 1995 Edition, 1996 Addenda of ASME Section XI.

Code Requirement:

Paragraph IWA-2210 Table IWA-2210-1 provides requirements for distance and illumination requirements for performing VT-3 visual examinations.

Code Requirement from Which Relief is Requested:

Relief is requested from the provisions of Table IWA-2210-1,Visual Examinations, when performing VT-3 examinations required by IWE. Table IWA-2210-1 requires direct visual VT-3 examinations be performed with a minimum illumination of 50 fc, and a maximum examination distance of 4 feet. The procedure must be demonstrated to resolve a lower case character height of 0.105 inches.

Basis for Relief:

IWA-2210 requires visual examinations be performed in accordance with Article 9 of ASME Section V. Direct visual examination is defined in Article 9 of the 1995 Edition, 1996 Addenda of ASME Section V as a visual examination technique performed by eye and without any visual aids (excluding light source, mirrors, and/or corrective lenses). Table IWA-2210-1 requires the VT-3 examination be performed with a minimum illumination of 50 fc and a maximum direct examination distance of 4 feet.

IWA-2216 states that when remote visual examination is substituted for direct visual examination, the remote visual examination system shall have the capability of distinguishing and differentiating between colors in addition to the requirements of ASME Section V, Article 9. Remote visual examination is defined in Article 9 of the 1995 Edition, 1996 Addenda of ASME Section V as a visual examination technique used with visual aids for conditions where the area is inaccessible for direct visual examination. Remote visual examination may use visual aids such as mirrors, telescopes, borescopes, fiber optics, cameras, or other suitable instruments. Article 9

requires remote visual examination systems have a resolution capability at least equivalent to that obtainable by direct visual observation.

Considering the size of containment structures (as compared to Class 1, 2,and 3 components), and recognizing the varied lighting conditions, the NRC provided latitude from the requirement of IWA-2216 for VT-3 remote visual examination in 10 CFR 50.55a(b)(2)(ix)(B). 10 CFR 50.55a(b)(2)(ix)(B) states that when performing remotely the visual examinations required by Subsection IWE, the maximum direct examination distance specified in Table IWA-2210-1 may be extended and the minimum illumination requirements specified in Table IWA-2210-1 may be decreased provided that the conditions or indications for which visual examination is performed can be detected at the chosen distance and illumination. 10 CFR 50.55a(b)(2)(ix)(B) applies to remote visual examinations, but does not apply to direct visual examinations.

The Davis-Besse containment vessel is a free standing, large volume steel vessel. Access to the surfaces of the containment vessel is provided at the 565' elevation, the 585' elevation, the 603' elevation, and the 653' elevation. Approximately 15% of the containment surface is within the maximum 4 foot examination distance necessary to perform a direct visual VT-3 examination. The remainder must either be examined from scaffold or by remote examination.

Installation of scaffold is not considered practical. Installation of scaffold would require nearly 1600 lineal feet of scaffold ranging in height of 10 feet to 40 feet. Many areas of containment do not contain sufficient room to erect scaffold within 4 feet of the containment vessel. In other areas, scaffold would restrict normal access and egress routes for personnel working in containment.

Remote visual examination may be used in lieu of building scaffold. When using remote examination, the maximum direct examination distance and the minimum illumination requirements of Table IWA-2210-1 may be extended or decreased respectively in accordance with 10 CFR 50.55a(b)(2)(ix)(B) provided conditions for which the visual examination is being performed can be identified. However, this relaxation in Table IWA-2210-1 applies only to remote visual examinations and does not apply to direct visual examinations. The direct visual examination distance and illumination requirements of Table IWA-2210-1 are impractical when performing containment examinations. Conditions for which the containment visual examinations are being performed can be seen at distances much greater than the maximum direct visual VT-3 examination distance specified in Table IWA-2210-1.

Remote visual examinations are qualified at a specific distance and illumination in accordance with 10 CFR 50.55a(b)(2)(ix)(B) using a chipped paint specimen or an

18% neutral gray card. This same chipped paint specimen or 18% neutral gray card will be used to qualify the maximum examination distance and minimum illumination for performing direct visual VT-3 examination. This qualification process will ensure that the direct visual and remote visual examination processes are equivalent.

Relief is requested in accordance with 10 CFR 50.55a(a)(3)(i). Performance of direct visual VT-3 examinations qualified to the same standards as remote visual VT-3 examinations will provide an acceptable level of quality and safety.

Subsection IWE of the 1998 Edition of ASME Section XI no longer requires a VT-3 examination of the containment surfaces. Therefore, the requirements of Table IWA-2210-1 are no longer applicable to IWE containment examinations.

Alternative Examination:

Direct visual VT-3 examinations will be qualified at distances exceeding the requirements of Table IWA-2210-1 and illumination less than Table IWA-2210-1 requirements. The direct visual VT-3 examinations will be qualified on the same specimen as used to qualify the remote visual examinations.

Justification for the Granting of Relief:

Considering the size of the containment structures and recognizing the varied lighting conditions in containments, the NRC provided latitude in 10 CFR 50.55a(b)(2)(ix)(B) from the requirement of IWA-2216 for VT-3 remote visual examination. The IWA-2216 requirements are contained in Table IWA-2210-1. However, this relaxation in Table IWA-2210-1 applies only to remote visual examinations and does not apply to direct visual examinations. Conditions for which the containment visual examinations are being performed can be seen at distances much greater than the maximum direct visual VT-3 examination distance specified in Table IWA-2210-1. Qualification of direct visual VT-3 examinations to the same specimens used to qualify remote examinations will ensure that the examinations throughout the containment are consistent and will identify any conditions which may be detrimental to the leak tight integrity of the containment vessel. Performance of direct visual VT-3 examinations qualified to the same standards as remote visual VT-3 examinations will provide an acceptable level of quality and safety.

Implementation Schedule:

The VT-3 visual examination of the containment surfaces will be performed during the third period of the inspection interval.

FIRST ENERGY NUCLEAR OPERATING COMPANY
DAVIS-BESSE UNIT 1
THIRD 10-YEAR INTERVAL
RELIEF REQUEST RR-E8

System/Component(s) for Which Relief is Requested:

Surface areas subject to augmented examination in accordance with Subsection IWE of the 1995 Edition, 1996 Addenda of ASME Section XI.

Code Requirement:

ASME Section XI, 1995 Edition, 1996 Addenda, Subarticle IWE-2500(c)(3) requires one foot square grids be used when ultrasonic thickness measurements are performed on augmented examination surface areas. The number and location of the grids is determined by the Owner. Subarticle IWE-2500(c)(4) requires the minimum wall thickness within each grid be determined.

Code Requirement from Which Relief is Requested:

Relief is requested from using one foot square grids for augmented examination areas and the requirement to determine the minimum wall thickness within each grid. Code Case N-605 will be used as an alternative to the requirements of IWE-2500(c).

Basis for Relief:

Subarticles IWE-2500(c)(3) and IWE-2500(c)(4) of the 1995 Edition, 1996 Addenda of ASME Section XI, require that the minimum thickness within each one foot square grid of surface areas requiring augmented examination be marked such that periodic reexamination of that location can be performed. Thickness readings are point readings. Numerous readings are necessary to identify the minimum thickness within each grid. This only identifies the thinnest area. Periodic examination of the minimum thickness point only monitors that point. It may not be the area that is the most susceptible to accelerated degradation.

Code Case N-605 provides an alternative to the one foot square grid area required by IWE-2500(c)(3). Code Case N-605 requires examination at the grid line intersections. The grid line intersections may not exceed 12 inches and may be as small as 2 inches.

For a sample area of 50 square feet, Code Case N-605 requires a minimum 100 locations be monitored. For a sample area of 50 square feet, IWE-2500(c)(3) would

require only 50 locations be monitored. In this instance, utilizing Code Case N-605 monitors more locations than required by IWE-2500(c)(3).

For sample areas greater than 100 square feet, Code Case N-605 requires that sufficient points be monitored to ensure at least a 95% confidence level that the thickness of the base metal is reduced by no more than 10% of the nominal plate thickness at 95% of the grid line intersections. Code Case N-605 also requires additional examinations when any measurements reveal wall thickness is reduced by more than 10% of the nominal plate thickness.

For all examination areas, should the measurements at a grid line intersection reveal that the base material is reduced by more than 10% of the nominal plate thickness, Code Case N-605 requires the minimum wall thickness within each adjoining grid be determined. This is similar to the examination requirements of IWE-2500(c)(4) except that Code Case N-605 focuses resources on areas that have exhibited degradation rather than areas that have not exhibited degradation.

The Flow Accelerated Corrosion programs presently in place have proven that taking thickness readings taken at grid intersections are effective in monitoring wall thinning of piping.

Relief is requested in accordance with 10 CFR 50.55a(a)(3)(ii). Taking numerous ultrasonic thickness readings within a grid that had not exhibited degradation results in hardship or unusual difficulty without a compensating increase in the level of quality and safety. A relief request for using grids similar to those detailed in Code Case N-605 was previously granted for the Second 10-Year Interval in Relief Request RR-E9 (TAC No. MA0414).

Alternative Examination:

Code Case N-605 will be used to perform augmented examination of containment surface areas.

Justification for the Granting of Relief:

Code Case N-605 requires examinations be conducted at grid line intersections and only within grid sections when the grid intersection examinations reveal evidence that the base material wall thickness is being reduced. Code requirements would require numerous readings be taken within a grid that had not exhibited degradation. Compliance with the Code requirements in which examinations will be taken in areas not exhibiting degradation would result in undue hardship and unusual difficulty without a compensating increase in the level of quality and safety.

Implementation Schedule:

Code Case N-605 will be used when augmented examination of containment surface areas is required.

10.0 ULTRASONIC (UT) CALIBRATION BLOCKS

Calibration blocks will be used to establish a reference sensitivity from which subsequent examinations may be compared.

10.1 Piping (UT) Calibration Blocks

10.1.1 The calibration block design may be:

- The basic calibration block described in III-3400 of ASME Section XI, Appendix III.
- The Alternative ASME Calibration Block (stepped block) endorsed by the Procedure Demonstration Initiative (PDI) procedures.

10.2 Bolting (UT) Calibration Blocks

10.2.1 The basic calibration block will have an examination surface finish and material composition with acoustic properties similar to the stud or bolt to be examined. These blocks will have the same basic physical size dimensions as the stud or bolt to be examined.

10.2.2 The basic calibration block will have circumferentially oriented calibration notches which initiate from the inner bore hole surface (if applicable) and the outside diameter thread surface as a minimum. The notch on the outside diameter will be initiated in the root area of the threads. The physical dimensions of the notches will meet the size requirements of ASME Section XI, Appendix VIII, Supplement 8.

10.3 Reactor Vessel (UT) Calibration Blocks

10.3.1 Calibration blocks used for Reactor Vessel welds, with the exception of the Reactor Vessel flange welds, will the same type as that qualified during the qualification of the UT system conducted in accordance with ASME Section XI, Appendix VIII.

10.4 Other Vessels (including the Reactor Vessel Flange Welds) Calibration Blocks

10.4.1 The calibration block design for vessels greater than 2 inches in thickness will be:

- The basic calibration block described in ASME Section V, Article 4 as supplemented by Table I-2000-1 of ASME Section XI, Appendix I or,
- The Alternative Weld Calibration Block as described in ASME Section XI, Appendix I, Supplement 4.

10.4.2 The calibration block design for vessels not greater than 2 inches in thickness will be in accordance with ASME Section XI, Appendix III, as supplemented by Table I-2000-1 of ASME Section XI, Appendix I.

10.5 List of Ultrasonic Calibration Blocks

10.5.1 Table 10 is a list of ultrasonic calibration blocks that will be used by FENOC. When additional volumetric examinations are necessary and a calibration standard does not exist FENOC will either have an acceptable block fabricated or borrow from an outside source an acceptable and documented calibration standard.

TABLE 10
ULTRASONIC CALIBRATION STANDARDS

CALIBR-ATION BLOCK #	MATERIAL	THICKNESS SCHEDULE	LENGTH WIDTH	DIAMETER	REMARKS
41403	SA-508 CL. 2	11.9	25.5 X 7.8	FLAT	RCP FLYWHEEL
41414	SA-376 TP 304	SCHD 160	8.0	2.5"	HIGH PRESSURE INJECTION
41415	SA-376 TP 316	SCHD 120	8.0	4"	HIGH PRESSURE INJECTION
41417	SA-376 TP 316	SCHD 140	8.25	14"	CORE FLOOD PIPING
41418	TP 304	3.0	12.5 X 4.5	FLAT	REACTOR COOLANT PUMP SAFE END WELD
41422	SA-306	1.5	12.0 X 2.0	FLAT	OTSG SKIRT
41424	SA-516 GR 70/ SS CLAD	13.0	35.0 X 5.7	FLAT	PRESSURIZER HEATER BUNDLE TO SHELL WELD
41426	SA-376 TP 304	SCHD 160	8.0	8"	DECAY HEAT
41435	SA-508 CL 2/ SS CLAD	3.0	12.0 X 8.0	FLAT	REACTOR COOLANT SYSTEM NOZZLE TO PIPE

CALIBR-ATION BLOCK #	MATERIAL	THICKNESS SCHEDULE	LENGTH WIDTH	DIAMETER	REMARKS
41437	SA-508 CL 2/ SS CLAD	12.0	48.0	192.0"	REACTOR VESSEL FLANGE TO SHELL & RV FLG. STUD HOLE LIGAMENTS
41438	SA-533 GR B/ SS CLAD	7.1	28.0 X 7.0	FLAT	REACTOR VESSEL FLANGE TO HEAD
41439	SA-516 GR 70/ SS CL	6.7 w/clad 6.26 w/o clad	28.0 X 7.8	FLAT	STEAM GENERATOR SECONDARY SIDE/ PRESSURIZER HEAD
41440	SA-516 GR 70/ SS CL	5.0 w/clad 4.7 w/o clad	21.0 X 7.9	FLAT	STEAM GENERATOR SECONDARY SIDE/ PRESSURIZER UPPER & LOWER HEAD/ REACTOR COOLANT HOT LEG COMPONENTS
41441	SA-533 GR B/ SS CLAD	8.95	36.0 x 6.8	FLAT	SG UPPER & LOWER HEAD

CALIBR-ATION BLOCK #	MATERIAL	THICKNESS SCHEDULE	LENGTH WIDTH	DIAMETER	REMARKS
41443	A-106 GR C	2.56	12.0	33.0" 28" ID	REACTOR COOLANT COLD LEG PIPING
41445	SA-106 GR B	SCHD 80	12.0	14"	MAIN STEAM PIPING
41446	SA-106 GR B	SCHD 80	10.4	18"	MAIN FEEDWATER PIPING
41447	SA-515 GR 70	0.80	12.0	26"	MAIN STEAM PIPING
41448	SA-515 GR 70	1.06	12.0	36"	MAIN STEAM PIPING
41449	SA-515 GR 70	2.55	12.0	36"	MAIN STEAM PIPING
41450	SA-182 TP F304	1.10	10.0	4.5"	PZR RELIEF NOZZLE TO PIPE
41452	SA-240 TP 304	0.745	12.0 x 8.0	FLAT	DECAY HEAT COOLER
41453	SA-106 GR B	SCHD 80	12.0	6"	AUXILIARY FEEDWATER PIPING

CALIBR-ATION BLOCK #	MATERIAL	THICKNESS SCHEDULE	LENGTH WIDTH	DIAMETER	REMARKS
41454	SA-376 TP 316	SCHD 140	12.0	10"	DECAY HEAT/ PRESSURIZER SURGE/ LOW PRESSURE INJECTION PIPING
41457	SA-376 TP 316	SCHD 140	12.0	8"	DECAY HEAT PIPING
41472C	SA-479 TP 316	0.765	6.0	3.5"	HIGH PRESSURE INJECTION NOZZLE
41477	SA-336 CL F8M	1.82	12.0	15.8"	CORE FLOOD SAFE END WELDS
41478	A-106 GR C/ SS CLAD	3.02	14.0	42.0"	REACTOR COOLANT (HOT LEG) PIPING
41481	SS/SA-376 TP 304	SCHD 40	10.0	11.63 "	PRESSURIZER SURGE NOZZLE
41482	A-312 TP 304	SCHD 20	10.0	24"	ECCS PIPING
41483	SA-508 CL 2	1.44	10.0	4"	PRESSURIZER SURGE NOZZLE

CALIBR-ATION BLOCK #	MATERIAL	THICKNESS SCHEDULE	LENGTH WIDTH	DIAMETER	REMARKS
41484	SA-320 GR L43	N/A	14.9	2.75"	PRESSURIZER MANWAY STUD
41487	A-516 GR 70/ SS CLAD	3.20 w/clad 3.0 w/o clad	12.0 X 6.0	FLAT	REACTOR COOLANT COLD LEG PIPING
41488	SA-193 GR 87	N/A	11.5	2.25	HPI PUMP CASING STUD
41489	A-540 GR 23	N/A	60.25	6.25	RPV HEAD CLOSURE STUD
41490	SA-234 WPB	SCHD 60	10.0	8"	MAIN STEAM SYSTEM
41491	SA-105 GR 2	1.20	10.0	7.5" OD 6"	MAIN STEAM SYSTEM
41492	SB-166	0.61	7.0	4.56	PRESSURIZER SPRAY SAFE END
41493	SA-312 TP 304	SCHD 30	10.0	14"	ECCS/ CORE FLOOD
41495	SA-358 CL 1 TP 304	SCHD 20	10.0	12"	ECCS
41496	SA-376 TP 316	SCHD 140	10.0	12"	DECAY HEAT/ LOW PRESSURE INJECTION

CALIBR-ATION BLOCK #	MATERIAL	THICKNESS SCHEDULE	LENGTH WIDTH	DIAMETER	REMARKS
41497	SA-234 WPC	1.0	8.0 X 3.0	FLAT	MAIN STEAM OUTLET NOZZLE TO REDUCER
41498	SB-166	0.75	7.0	5.125"	PZR SPRAY SAFE END TO NOZZLE
41499	SA-312 TP 304	SCHD 20	10.0	8"	CONTAINMENT SPRAY
41500	SA-312 TP 304	SCHD 20	10.0	12"	DECAY HEAT
41501	SA-106 GR B	SCHD 40	10.0	6"	MAIN STEAM
41502	A-508 CL 1A/ SS CLAD	1.16 .64	14.75	6.25" 5.12"	PZR. SPRAY NOZZLE
41503	A-508 CL 1A	2.0	17.0	6.875"	PZR. RELIEF NOZZLE
41504	A-508 CL 1A	2.98	12.0	15.25"	PZR. SURGE NOZZLE

11.0 REPAIRS AND RELPLACEMENTS

Repair, replacement and modifications of vessels, tanks, pumps, valves and piping, including their supports, that are located within the Class 1, 2, 3, and IWE boundaries on the Inservice Inspection Boundary Diagrams (ISID2) are performed in accordance with the rules of Section XI, 1995 Edition, through the 1996 Addenda. The rules of Section XI for repairs, replacements and modifications also apply to pressure retaining materials, structural attachments to pressure retaining materials and to supports as shown on the support detail drawings. Pressure retaining materials include vessel shells, heads and nozzles; pipes and fittings; valve bodies bonnets and disks; pump casings and covers; and bolting which joins pressure retaining items.

Repair, replacements and modifications within the scope of Section XI are performed under Davis-Besse's "NR" and "VR" Certificate of Authorization issued by the National Board of Boiler and Pressure Vessel Inspectors, Certificate No. 20 and 316, respectively.

Section XI requires the use of Form NIS-2 for repairs and replacements. Under the current Certificates of Authorization for repairs, replacements, or modifications, Davis-Besse is required to also use Form NR-1/NVR-1. To avoid duplication, it is FENOC's intent to utilize the Form, NIS-2/NR-1/NVR-1, Owners Report for Repairs or Replacements. This form is a modified NIS-2 to accommodate the additional information required by Form NVR-1. This form has been incorporated into the Davis-Besse ASME Quality Assurance Manual and has been accepted for use by the National Board and the Authorized Inspection Agency.

THIS PAGE IS AN OVERSIZED DRAWING OR FIGURE,

THAT CAN BE VIEWED AT THE RECORD TITLED:

INSERVICE INSPECTION DRAWINGS

WITHIN THIS PACKAGE...OR, BY SEARCHING USING THE DRAWING NUMBER:

(Reference Drawing Numbers and Titles are on Pages 187 to 199 in Section 8)

NOTE: Because of this page's large file size, it may be more convenient to copy the file to a local drive and use the Imaging (Wang) viewer, which can be accessed from the Programs/Accessories menu.

TABLE 1 INSERVICE INSPECTION SKETCHES

DRAWING NUMBER	TITLE
ISI-SK-001	INSERVICE INSPECTION SKETCHES - DRAWING INDEX/NOTES
ISI-SK-002	REACTOR VESSEL WELDS
ISI-SK-003	REACTOR VESSEL INLET AND OUTLET NOZZLE DETAILS
ISI-SK-004 SH.1	REACTOR VESSEL CLOSURE HEAD BOLTING DETAILS
ISI-SK-004 SH.2	REACTOR VESSEL CLOSURE HEAD BOLTING DETAILS
ISI-SK-005 SH.1	CONTROL ROD DRIVE HOUSING WELDS AND BOLTING DETAILS
ISI-SK-005 SH.2	CONTROL ROD DRIVE HOUSING WELDS AND BOLTING DETAILS
ISI-SK-006	REACTOR VESSEL INSTRUMENTATION NOZZLE DETAILS
ISI-SK-007 SH.1	REACTOR VESSEL SUPPORTS
ISI-SK-007 SH.2	REACTOR VESSEL SUPPORTS
ISI-SK-008	REACTOR VESSEL CORE SUPPORT ASSEMBLY
ISI-SK-009 SH.1	REACTOR VESSEL CORE SUPPORT ASSEMBLY BOLTING DETAILS
ISI-SK-009 SH.2	REACTOR VESSEL CORE SUPPORT ASSEMBLY BOLTING DETAILS
ISI-SK-009 SH.3	REACTOR VESSEL CORE SUPPORT ASSEMBLY BOLTING DETAILS
ISI-SK-009 SH.4	REACTOR VESSEL CORE SUPPORT ASSEMBLY BOLTING DETAILS
ISI-SK-009 SH.5	REACTOR VESSEL CORE SUPPORT ASSEMBLY BOLTING DETAILS
ISI-SK-009 SH.6	REACTOR VESSEL CORE SUPPORT ASSEMBLY BOLTING DETAILS
ISI-SK-009 SH.7	REACTOR VESSEL CORE SUPPORT ASSEMBLY BOLTING DETAILS
ISI-SK-020	PRESSURIZER OUTLINE
ISI-SK-021	PRESSURIZER UPPER HEAD NOZZLE DETAILS
ISI-SK-022	PRESSURIZER LOWER HEAD NOZZLE DETAILS
ISI-SK-023	PRESSURIZER BOLTING DETAILS
ISI-SK-024 SH.1	PRESSURIZER SUPPORTS
ISI-SK-024 SH.2	PRESSURIZER SUPPORTS
ISI-SK-030	STEAM GENERATOR 1-1 SHELL AND HEAD WELDS
ISI-SK-031	STEAM GENERATOR 1-2 SHELL AND HEAD WELDS
ISI-SK-032	STEAM GENERATOR 1-1 NOZZLE WELDS
ISI-SK-033	STEAM GENERATOR 1-2 NOZZLE WELDS
ISI-SK-034	STEAM GENERATORS 1-1 AND 1-2 BOLTING DETAILS PRIMARY SIDE
ISI-SK-035 SH.1	STEAM GENERATORS 1-1 AND 1-2 UPPER LATERAL SUPPORTS
ISI-SK-035 SH.2	STEAM GENERATORS 1-1 AND 1-2 UPPER LATERAL SUPPORTS
ISI-SK-036 SH.1	STEAM GENERATORS 1-1 AND 1-2 LOWER SUPPORTS
ISI-SK-036 SH.2	STEAM GENERATORS 1-1 AND 1-2 LOWER SUPPORTS
ISI-SK-037	STEAM GENERATOR 1-1 MAIN FEEDWATER ATTACHMENT WELDS
ISI-SK-038	STEAM GENERATOR 1-2 MAIN FEEDWATER ATTACHMENT WELDS
ISI-SK-040	REACTOR COOLANT PUMP OUTLINE AND BOLTING DETAILS
ISI-SK-041	RCP 1-1-1 AND RCP 1-2-2 PUMP CASE ASSEMBLY
ISI-SK-042	RCP 1-1-2 AND RCP 1-2-1 PUMP CASE ASSEMBLY
ISI-SK-043	REACTOR COOLANT PUMP SUPPORTS
ISI-SK-044 SH.1	REACTOR COOLANT PUMP FLYWHEEL DETAIL
ISI-SK-044 SH.2	REACTOR COOLANT PUMP FLYWHEEL DETAIL
ISI-SK-050	DECAY HEAT COOLERS 1-1 AND 1-2 OUTLINE AND SUPPORTS
ISI-SK-051	HP INJECTION PUMPS 1-1 AND 1-2 OUTLINE AND SUPPORTS
ISI-SK-052 SH.1	HP INJECTION PUMPS 1-1 AND 1-2 PRESSURE RETAINING WELDS AND BOLTING DETAILS
ISI-SK-052 SH.2	HP INJECTION PUMPS 1-1 AND 1-2 PRESSURE RETAINING WELDS AND BOLTING DETAILS
ISI-SK-053	MAIN STEAM VENT VALVES 1CS11A AND 1CS11B WELDS

NOTES:

1. ISI SKETCHES ARE NON-DESIGN, PROJECT DRAWINGS THAT ARE USED TO LOCATE THE WELDS AND ITEMS IN ASME SECTION XI, CLASS 1 AND 2 VESSELS, PUMPS AND VALVES THAT REQUIRE INSERVICE INSPECTION. THE ISI SKETCHES IDENTIFY THE COMPONENT, WELD NUMBER OR MARK NUMBER OF THE ITEM, THE DIMENSIONS WHICH ARE USED TO LOCATE THE WELD OR ITEM, WHEN APPROPRIATE, THE TYPE OF EXAMINATION (EXAMPLE: VOLUMETRIC EXAMINATION) AND THE ASME SECTION XI ITEM NUMBER FOR THE EXAMINATION. 1

2. THE ISI SKETCHES INCLUDE EXAMINATIONS THAT ARE REQUIRED BY ASME SECTION XI AND AUGMENTED EXAMINATIONS. THE EXAMINATIONS THAT ARE SPECIFIED ON THE ISI SKETCHES ARE A RESTATEMENT OF THE EXAMINATION REQUIREMENTS IN THE TOLEDO EDISON ASME SECTION XI INSERVICE INSPECTION PROGRAM PLAN. THE TOLEDO EDISON ASME SECTION XI INSERVICE INSPECTION PROGRAM PLAN SHALL BE USED TO DETERMINE THE SPECIFIC EXAMINATION REQUIREMENTS THAT APPLY FOR EACH COMPONENT AND THEIR SUPPORTS.

3. THE ISI SKETCHES IDENTIFY THE CLASS 1 AND 2 SUPPORTS THAT REQUIRE INSERVICE INSPECTION IN ACCORDANCE WITH SUBSECTION IWF OF ASME SECTION XI. THE BOUNDARIES OF THE SUPPORT AND THE EXAMINATION THAT IS REQUIRED. THE CIVIL DRAWINGS AND VENDOR DRAWINGS THAT ARE REFERENCED ON THE ISI SKETCHES SHALL BE USED TO LOCATE THE MECHANICAL AND WELDED CONNECTIONS TO THE BUILDING STRUCTURE. THE INTERMEDIATE CONNECTIONS AND THE CONNECTIONS TO THE PRESSURE RETAINING COMPONENT, INTEGRAL ATTACHMENT OR INTERVENING ELEMENT (EXAMPLE: REACTOR COOLANT PUMP MOTOR), AS APPLICABLE.

4. FOR ASME SECTION XI, CLASS 3 VESSELS, PUMPS AND VALVES, THE TOLEDO EDISON INSERVICE INSPECTION PROGRAM PLAN REFERENCES THE VENDOR DRAWINGS WHICH ARE TO BE USED TO PERFORM THE INSERVICE INSPECTION OF THE INTEGRAL ATTACHMENT (TABLE IWD-2500-1 OF ASME SECTION XI) AND THE INSERVICE INSPECTION OF THE COMPONENT SUPPORT (SUBSECTION IWF OF ASME SECTION XI).

5. THE ISI SKETCHES SHALL NOT BE USED FOR CONFIGURATION CONTROL. THE CIVIL DRAWINGS AND VENDOR DRAWINGS THAT ARE REFERENCED ON THE ISI SKETCHES SHALL BE USED TO DETERMINE THE SPECIFIC CONFIGURATION AND DIMENSIONS OF THE COMPONENT AND THEIR SUPPORTS.

REV.	DATE	DESCRIPTION
1	8/21/00	INC. DCN ISI-SK-001-1 PER DDR 00-1766
0	9/12/89	ISSUED FOR SECOND 10 YEAR INSERVICE INSPECTION INTERVAL

JOR	SBU		MA		1
BY	CHK	ENGR	ENGR SUPV	ENG MGR	

INITIALS ON FILE

SCALE N.T.S.	DESIGNED	DRAWN CB	DATE 7-10-89

DAVIS-BESSE NUCLEAR POWER STATION
UNIT NO. 1
THE TOLEDO EDISON COMPANY

Q

INSERVICE INSPECTION SKETCHES
DRAWING INDEX/NOTES

DRAWING NO.	REV.
ISI-SK-001	1

DB:07-27-00 DFN=J:/ISI/ISISK001.DGN

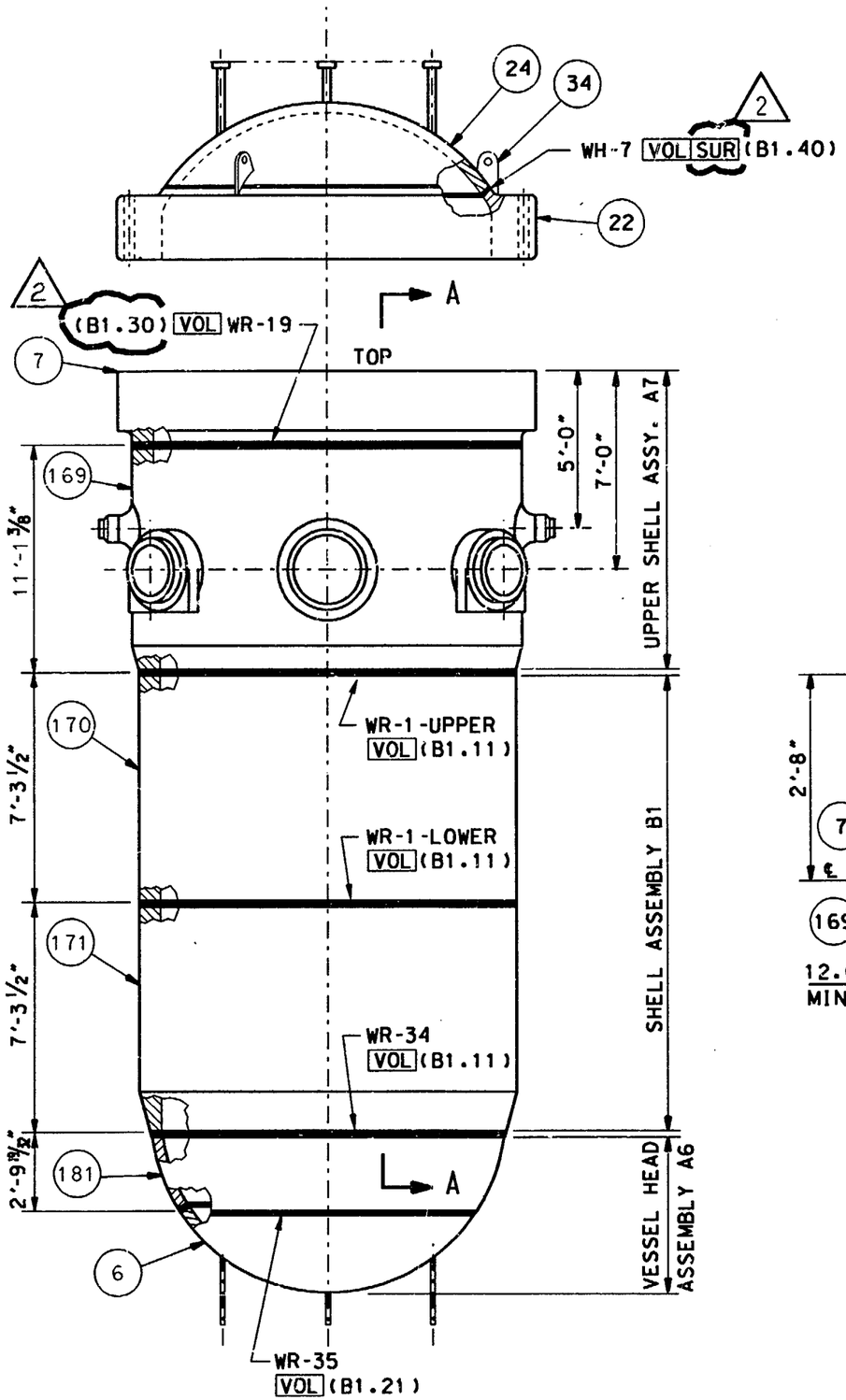

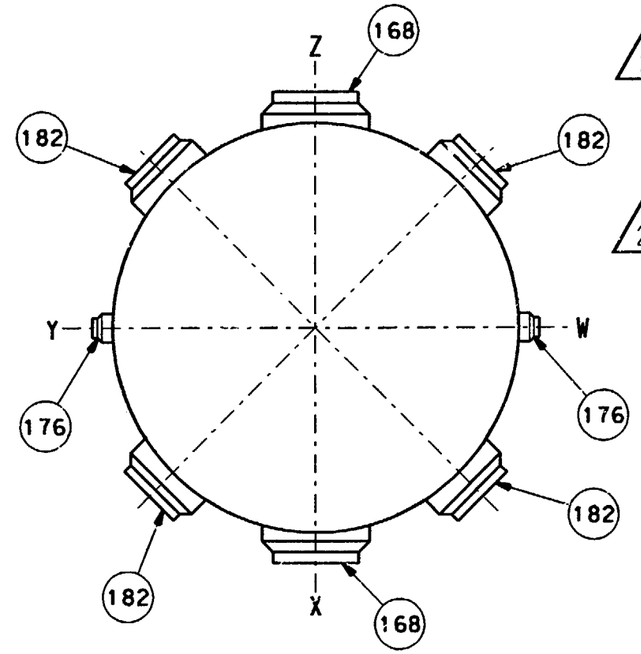

PLAN VIEW

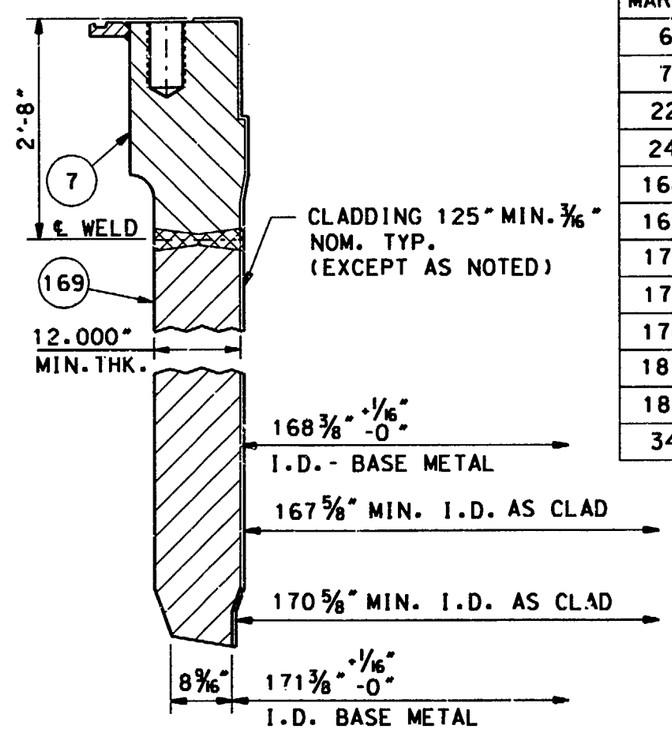

SECTION A-A

LEGEND:

2 VOL - VOLUMETRIC EXAMINATION
SUR - SURFACE EXAMINATION

NOTES:

1. THE WELD IDENTIFICATION NUMBERS ARE PRECEEDED BY "RPV-"

2

REFERENCE DRAWINGS:

B&W 154616E UPPER SHELL ASSEMBLY (TED# 7749-M-503-220)

B&W 154617E SHELL ASSEMBLY AND HOOD

B&W 154622E RADIOGRAPHIC OUTLINE (TED# 7749-M-503-216)

B&W 154623E VESSEL HEAD ASSEMBLY (TED# 7749-M-503-215)

MARK #	DESCRIPTION	MATERIAL
6	BOTTOM HEAD	SA 533 GRB
7	UPPER SHELL FLANGE	A 508 CL2
22	CLOSURE HEAD FLANGE	A 508 CL2
24	CLOSURE HEAD CENTER DISC	SA 533 GRB
168	36" DIA. OUTLET NOZZLE (2)	A 508 CL2
169	UPPER SHELL FORGING	A 508 CL2
170	INTER. SHELL FORGING	A 508 CL2
171	LOWER SHELL FORGING	A 508 CL2
176	14" DIA. CORE FLOODING NOZZLE (2)	A 508 CL2
181	TRANSITION PIECE	A 508 CL2
182	26" DIA. INLET NOZZLE (4)	A 508 CL2
34	LIFTING LUG - CLOSURE HEAD	SA 533 GRB

REV.	DATE	DESCRIPTION	BY	CHK	ENGR	ENGR SUPV	ENG MGR
2	9/30/92	INC. DCN ISI-SK-002-1 FOR DCR 91-0011	JFS	SAW	SJS	"INITIALS ON FILE"	
1	9-20-90	ISSUED FOR SECOND 10 YEAR INSERVICE INSPECTION INTERVAL					

SCALE N.T.S.	DESIGNED	DRAWN WME	DATE 5-3-89

DAVIS-BESSE NUCLEAR POWER STATION
UNIT NO. 1
THE TOLEDO EDISON COMPANY

Q

REACTOR VESSEL WELDS
CONTAINMENT BUILDING

DRAWING NO. ISI-SK-002 REV. 2

DB DATE: 08-29-92 DFN=DS1:[55,7]ISISK002.DGN

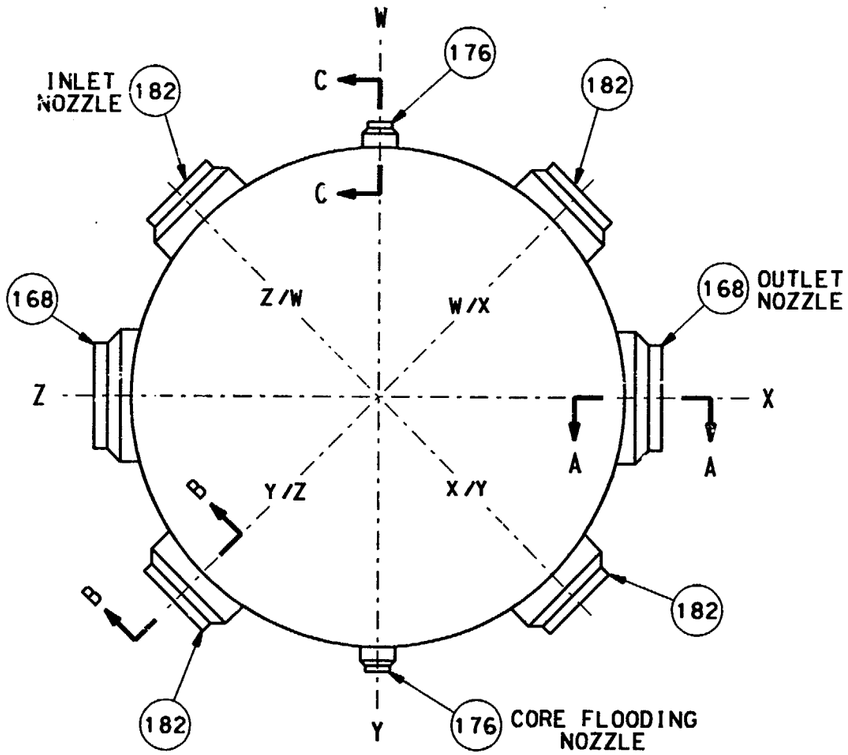

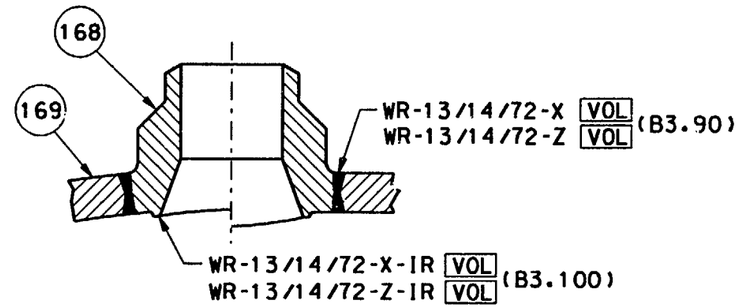

SECTION A-A

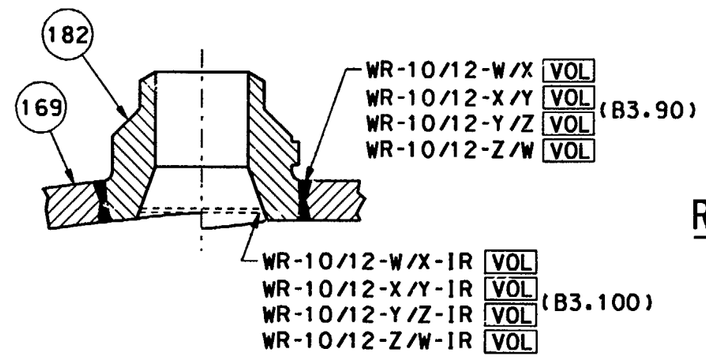

SECTION B-B

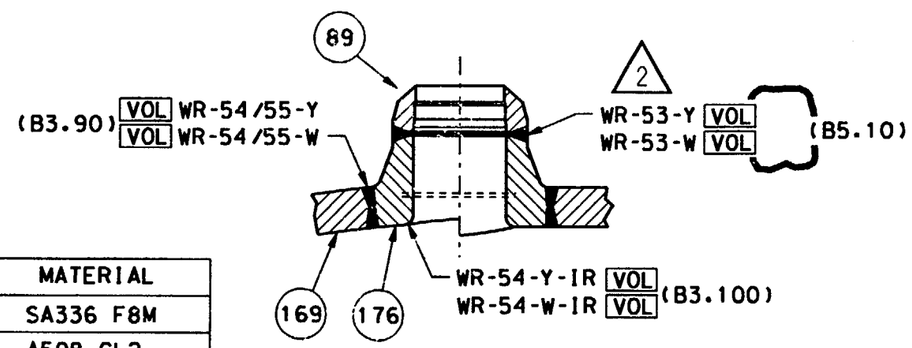

SECTION C-C

LEGEND:

VOL - VOLUMETRIC EXAMINATION

2

NOTES:

1. THE WELD IDENTIFICATION NUMBERS ARE PRECEEDED BY "RPV-"
2. WELDS WR-53-Y AND WR-53-W DO NOT REQUIRE A SURFACE EXAMINATION. SEE RELIEF REQUEST RR-A1.

2

REFERENCE DRAWINGS:

B&W 154622E RADIOGRAPHIC OUTLINE (TED# 7749-M-503-216)
B&W 154618E CORE FLOODING NOZZLE (TED# 7749-M-503-219)
B&W 154619E DETAIL AND SUBASSEMBLY OUTLET NOZZLE (TED# 7749-M-503-218)
B&W 154620E DETAIL AND SUBASSEMBLY INLET NOZZLE (TED# 7749-M-503-217)

MARK #	DESCRIPTION	MATERIAL
89	CORE FLOODING NOZZLE SAFE END (2)	SA336 F8M
168	36" DIA. OUTLET NOZZLE (2)	A508 CL2
169	UPPER SHELL FORGING	A508 CL2
176	14" DIA. CORE FLOODING NOZZLE (2)	A508 CL2
182	28" DIA. INLET NOZZLE (4)	A508 CL2

REV.	DATE	DESCRIPTION
2	9/20/92	INC. DCN ISI-SK-003-1 FOR DCR 91-0011
1	9-20-90	ISSUED FOR SECOND 10 YEAR INSERVICE INSPECTION INTERVAL

BY	CHK	ENGR	ENGR SUPV	ENG MGR
JFS	SBD	"INITIALS ON FILE"		

SCALE N.T.S.	DESIGNED	DRAWN WME	DATE 5-3-89

DAVIS-BESSE NUCLEAR POWER STATION
UNIT NO. 1
THE TOLEDO EDISON COMPANY

0

REACTOR VESSEL INLET AND OUTLET NOZZLE DETAILS
CONTAINMENT BUILDING

DRAWING NO.	REV.
ISI-SK-003	2

DB DATE: 08-29-92 DFN=OS1:[55,7]ISISK003.DGN

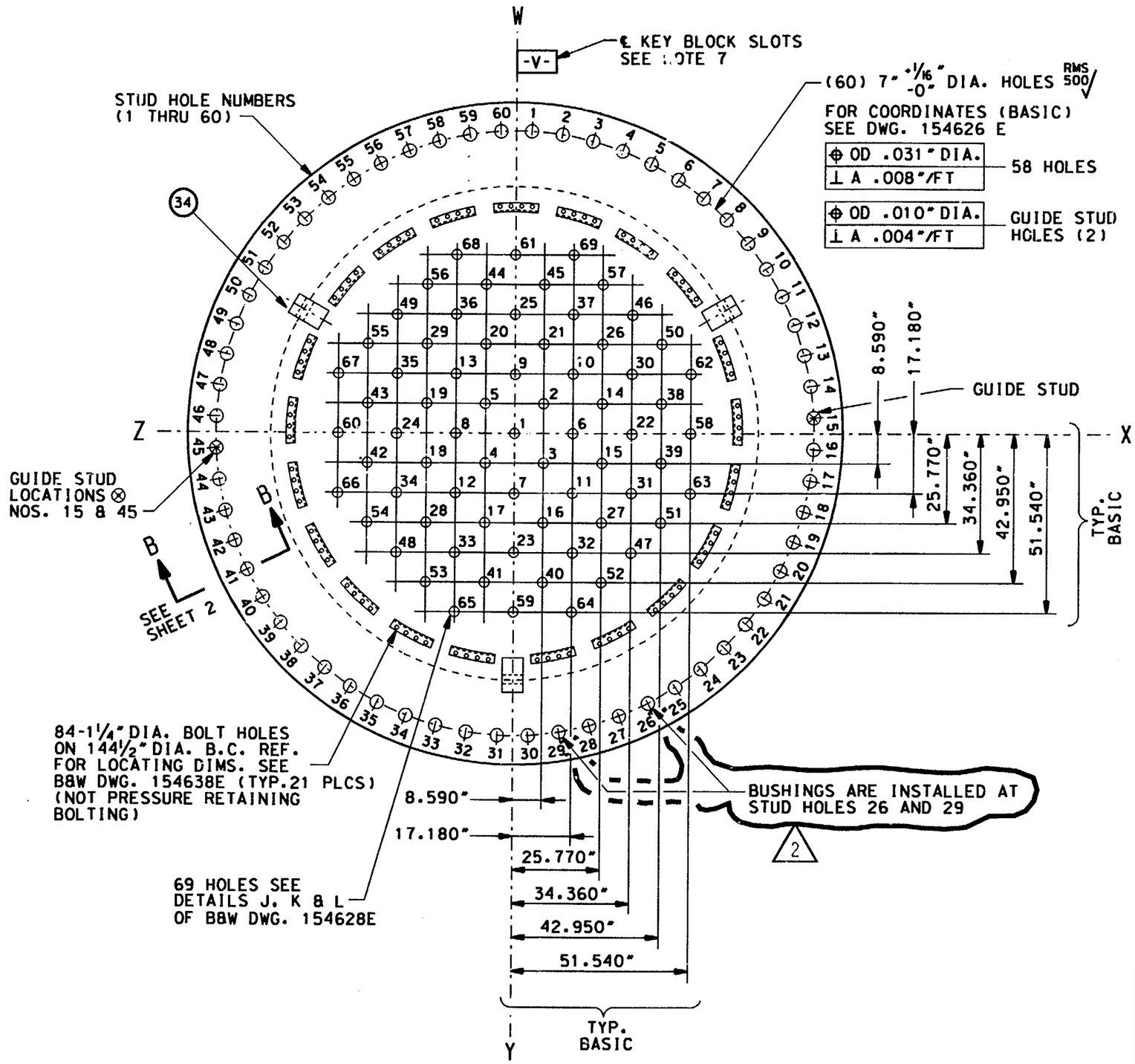

KEY PLAN

NOTES:

1. FOR EXAMINATION REQUIREMENTS AND NOTES. SEE SHEET 2 OF THIS DRAWING.

REFERENCE DRAWINGS:

B&W 154626E CLOSURE HEAD FLANGE

B&W 154628E CLOSURE HEAD SUBASSEMBLY (TED# 7749-M-503-212)

B&W 154634E DETAIL STUD, NUT AND WASHER (TED# 7749-M-503-83)

B&W 154638E SERVICE STRUCTURE SUPPORT AND MOUNTING FLANGE

SCALE N.T.S.	DESIGNED	DRAWN WME	DATE 5-3-89

DAVIS-BESSE NUCLEAR POWER STATION
UNIT NO. 1
THE TOLEDO EDISON COMPANY

REACTOR VESSEL CLOSURE HEAD
BOLTING DETAILS
CONTAINMENT BUILDING

DRAWING NO.	REV.
ISI-SK-004 SHEET 1	2

REV.	DATE	DESCRIPTION
2	9/29/92	INC. DCN ISI-SK-004-1 FOR DCR 91-0011
1	9-20-90	ISSUED FOR SECOND 10 YEAR INSERVICE INSPECTION INTERVAL

BY	CHK	ENGR	ENGR SUPV	ENG MGR
JFS	JFS	"INITIALS ON FILE"		

DB DATE: 08-29-92 DFN=QS1:[55,7]ISI04SH1.DGN

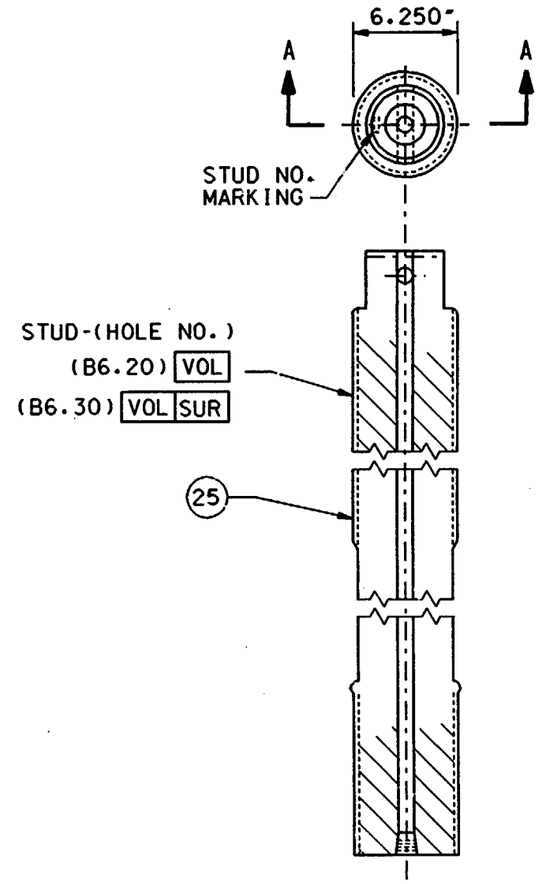

SECTION A-A
CLOSURE STUD

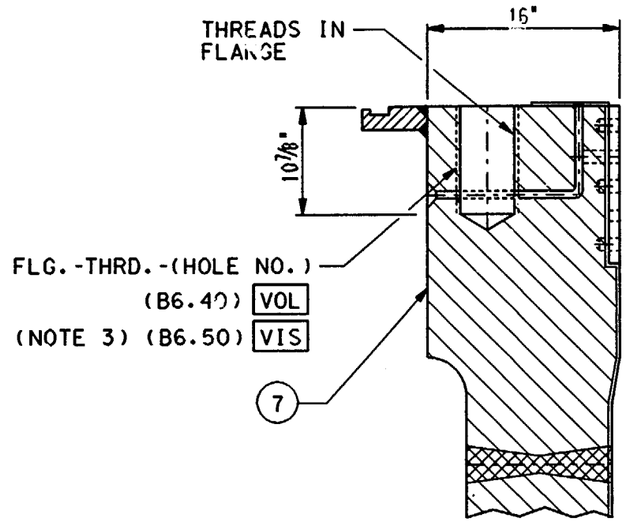

SECTION B-B

LEGEND:

VOL - VOLUMETRIC EXAMINATION

SUR - SURFACE EXAMINATION

VIS - VISUAL (VT-1) EXAMINATION

NOTES:

1. THE EXAMINATION IDENTIFICATION NUMBERS ARE PRECEEDED BY "RPV-" AND THE HOLE NUMBERS ARE 1 THRU 60.
2. THE CLOSURE STUDS SHALL BE SUBJECTED TO:
   A. VOLUMETRIC EXAMINATION AND SURFACE EXAMINATION WHEN REMOVED; OR
   B. VOLUMETRIC EXAMINATION WHEN IN-PLACE.
3. BUSHINGS ARE INSTALLED AT STUD HOLES 26 AND 29.

MARK NO.	DESCRIPTION	MATERIAL
7	UPPER SHELL FLANGE	A508 CL2
14	CONVEX WASHER (60)	A540 GR23
25	STUD (60)	A540 GR23
26	NUT (60)	A540 GR23
27	CONCAVE WASHER (60)	A540 GR23

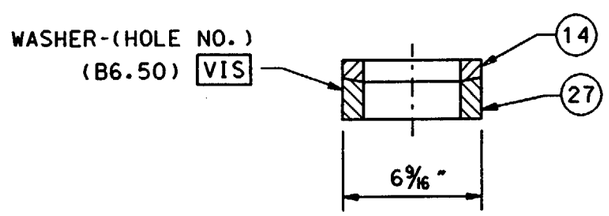

SPHERICAL WASHER

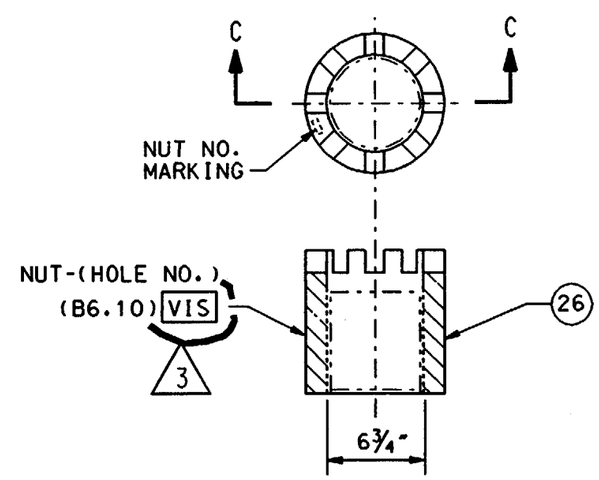

SECTION C-C
CLOSURE NUT

SCALE N.T.S	DESIGNED	DRAWN WME	DATE 5-3-89

DAVIS-BESSE NUCLEAR POWER STATION
UNIT NO. 1
THE TOLEDO EDISON COMPANY

REACTOR VESSEL CLOSURE HEAD
BOLTING DETAILS
CONTAINMENT BUILDING

DRAWING NO.	REV.
ISI-SK-004 SHEET 2	3

DB DATE: 07-27-00 DFN=J:/ISI/ISI04SH2.DGN

REV.	DATE	DESCRIPTION
3	8-21-00	INC. DCN ISI-SK-004-3 PER DDR 00-1766
2	9/30/92	INC. DCN ISI-SK-0004-2 FOR DCR 91-0011
1	9-20-90	ISSUED FOR SECOND 10 YEAR INSERVICE INSPECTION INTERVAL

BY	CHK	ENGR	ENGR SUPV	ENG MGR
JOR	SBW		MRA	
	"INITIALS ON FILE"	"INITIALS ON FILE"		

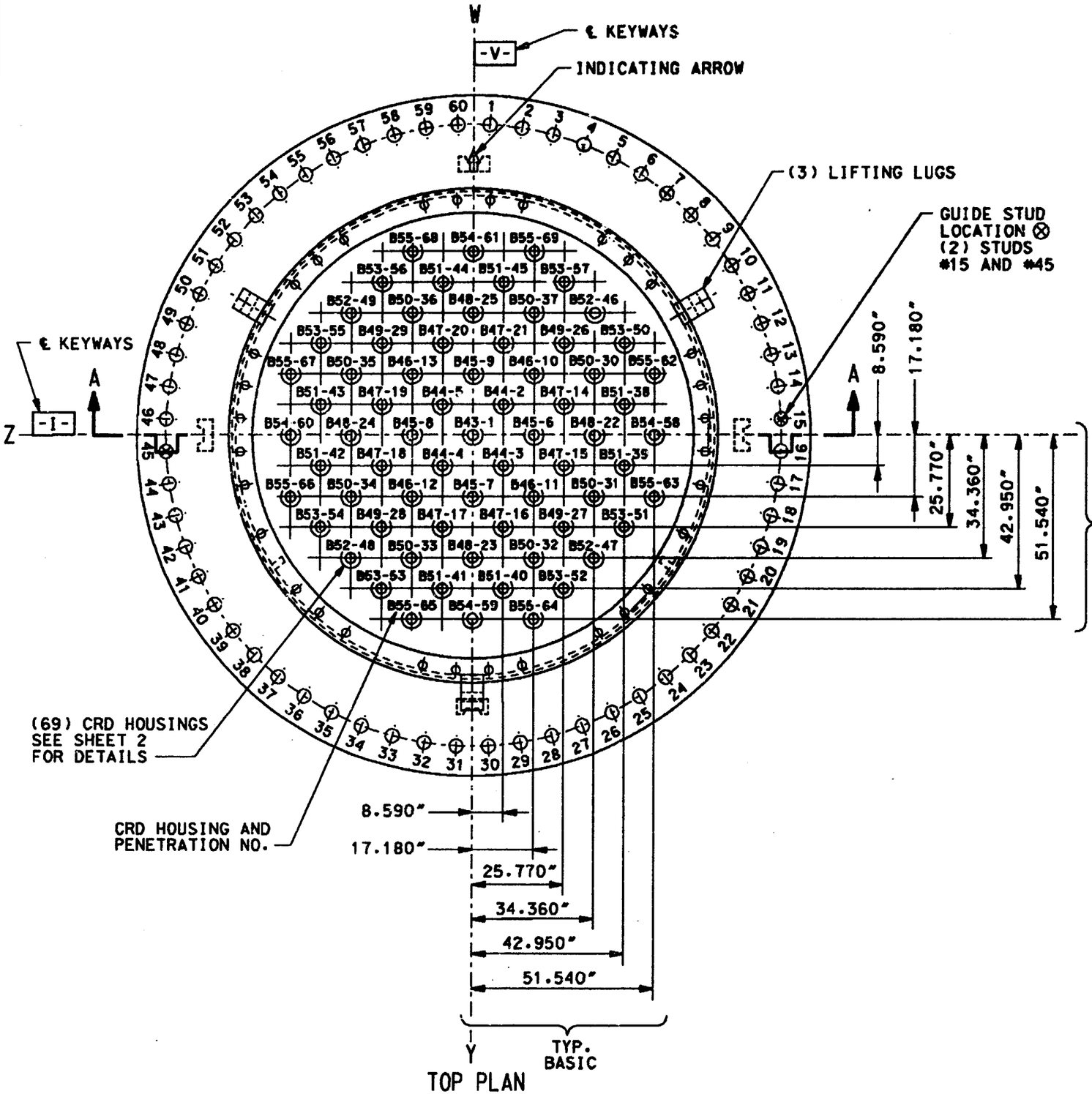

TOP PLAN

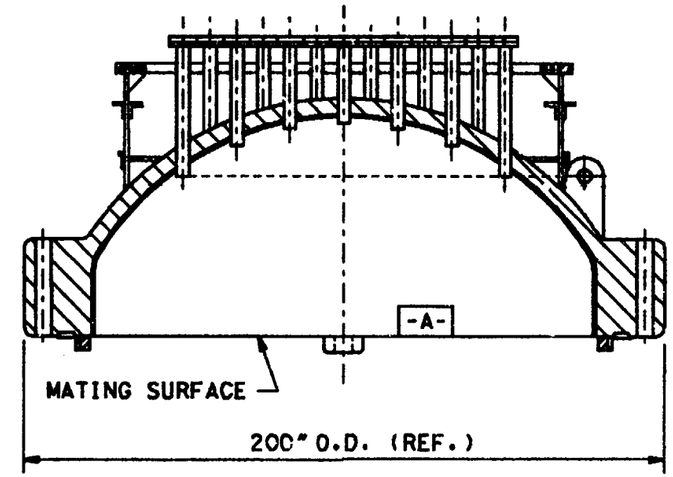

SECTION A-A
CLOSURE HEAD ASSEMBLY A-22

NOTES:

1. FOR EXAMINATION REQUIREMENTS AND NOTES. SEE SHEET 2 OF THIS DRAWING.

REFERENCE DRAWINGS:

B&W 154631E CLOSURE HEAD ASSEMBLY (TED #7749-M-503-127)

B&W 154632E CONTROL ROD MECHANISM HOUSING (TED #7749-M-503-213)

REV.	DATE	DESCRIPTION	BY	CHK	ENGR	ENGR SUPV	ENG MGR
0	9/13/89	ISSUED FOR SECOND 10 YEAR INSERVICE INSPECTION INTERVAL	WME	PJC	RB	LLC/EVC	

SCALE N.T.S	DESIGNED	DRAWN WME	DATE 5-3-89

DAVIS-BESSE NUCLEAR POWER STATION
UNIT NO. 1
THE TOLEDO EDISON COMPANY

Q

CONTROL ROD DRIVE HOUSING WELDS AND BOLTING DETAILS
CONTAINMENT BUILDING

DRAWING NO.	REV.
ISI-SK-005 SHEET 1 OF 2	0

DFN=QS1:[55,7]ISI05SH1.DGN

HOUSING ASSY. NO.	DB NO.	HOUSING ASSY. NO.	DB NO.
B43-1	H8	B44-3	C9
B44-2	G7	B44-5	K7
B44-4	K9	B45-7	H10
B45-6	F8	B45-9	H6
B45-8	L8	B46-11	F10
B46-10	F6	B46-13	L6
B46-12	L10	B47-15	E9
B47-14	E7	B47-17	K11
B47-16	G11	B47-19	M7
B47-18	M9	B47-21	C5
B47-20	K5	B48-23	H12
B48-22	D8	B48-25	H4
B48-24	N8	B49-27	E11
349-26	E5	B49-29	M5
B49-28	M11	B50-31	D10
B50-30	D6	B50-33	L12
B50-32	F12	B50-35	N6
B50-34	N10	B50-37	F4
B50-36	L4	B51-39	C9
B51-38	C7	B51-41	K13
B51-40	G13	B51-43	O7
B51-42	O9	B51-45	G3
B51-44	R3	B52-47	D12
B52-46	D4	B52-49	N4
B52-48	N12	B53-51	C11
B53-50	C5	B53-53	M13
B53-52	E13	B53-55	O5
B53-54	O11	B53-57	E3
B53-56	M3	B54-59	H14
B54-58	B8	B54-61	H2
B54-60	P8	B55-63	B10
B55-62	B6	B55-65	L14
B55-64	F14	B55-67	P6
B55-66	P10	B55-69	F2
B55-68	L2		

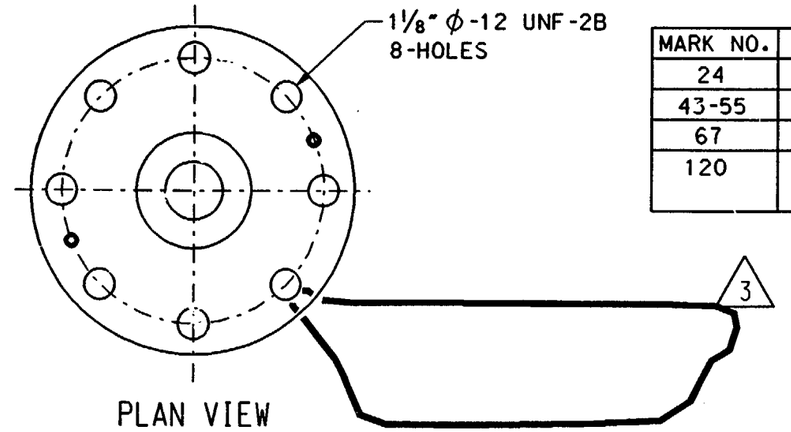

PLAN VIEW

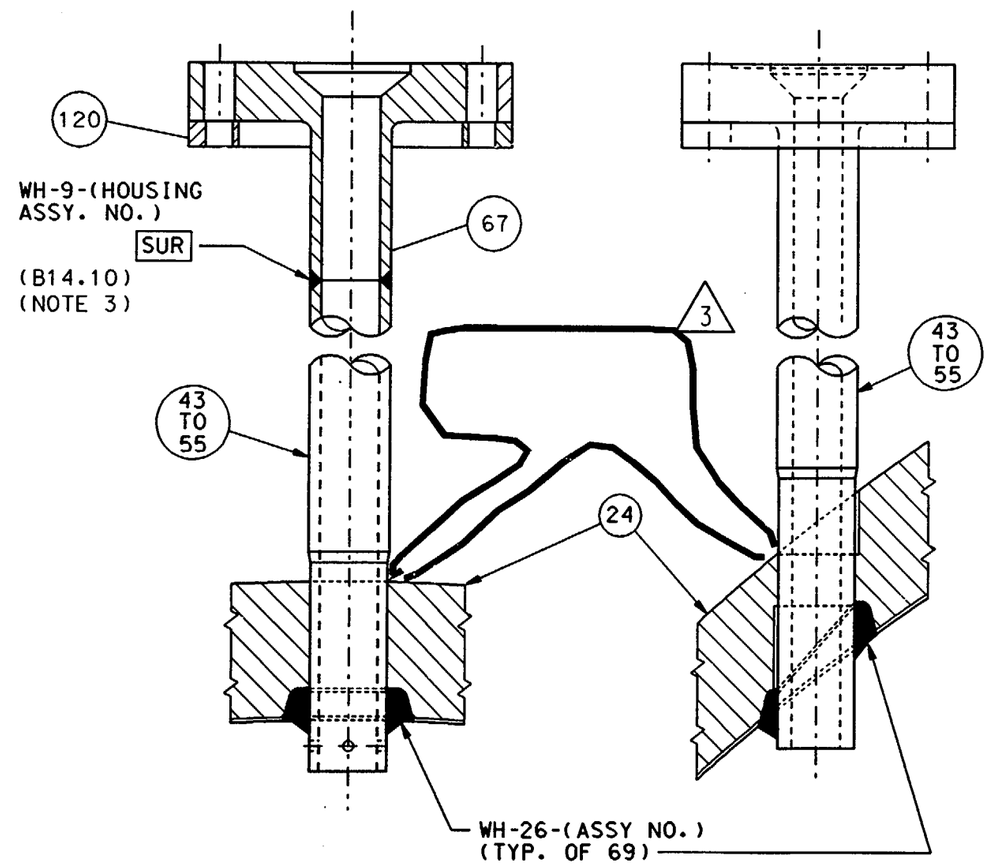

HOUSING AT CENTERLINE OF VESSEL

HOUSING AT OUTERMOST PENETRATION

MARK NO.	DESCRIPTION	MATERIAL
24	CLOSURE HEAD	SA533 GRB
43-55	CONTROL ROD HOUSING BODY (69)	SB167 INCONEL
67	CONTROL ROD HOUSING ADAPTER (69)	A182 F304
120	CONTROL ROD HOUSING FLANGE RING (2 SEGMENTS) (138)	SA320L-4-3 CL5

NOTES:

1. THE EXAMINATION IDENTIFICATION NUMBERS ARE PRECEEDED BY "RPV-CRD- ".
2. DELETED. 3
3. A MINIMUM OF 10% OF THE PERIPHERAL CRD NOZZLE AND MOTOR TUBE WELDS SHALL RECEIVE A SURFACE EXAMINATION.
4. DELETED 3
5. THE REACTOR VESSEL HEAD TO HOT LEG VENT LINE IS CONNECTED TO CRD HOUSING ASSEMBLY NO. B47-14.
6. SIXTY-ONE OF THE SIXTY-NINE CRD NOZZLES HAVE CRD MECHANISMS INSTALLED.

LEGEND:

SUR - SURFACE EXAMINATION

VIS - VISUAL (VT-1) EXAMINATION

SCALE N.T.S.	DESIGNED	DRAWN WME	DATE 5-3-89

DAVIS-BESSE NUCLEAR POWER STATION
UNIT NO. 1
THE TOLEDO EDISON COMPANY

Q

CONTROL ROD DRIVE HOUSING WELDS AND BOLTING DETAILS
CONTAINMENT BUILDING

DRAWING NO.	REV.
ISI-SK-005 SHEET 2	3

REV.	DATE	DESCRIPTION
3	8-21-00	INC. DCN ISI-SK-005-6 PER DDR 00-1766
1	9-20-90	ISSUED FOR SECOND 10 YEAR INSERVICE INSPECTION INTERVAL

	INITIALS	
ENG MGR		
ENGR SUPV	ON FILE	
ENGR		
CHK		
BY	JOR	

DB DATE: 07-27-00 DFN=J:/ISI/ISI05SH2.DGN

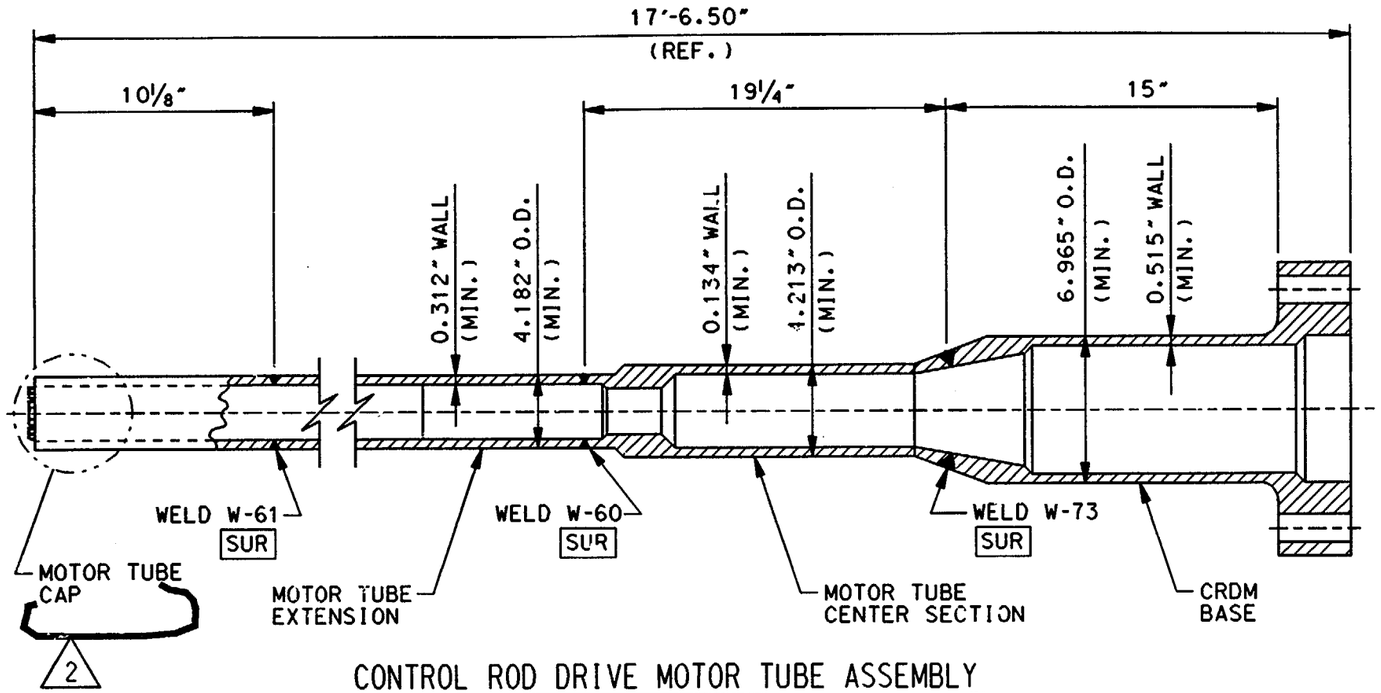

CONTROL ROD DRIVE MOTOR TUBE ASSEMBLY

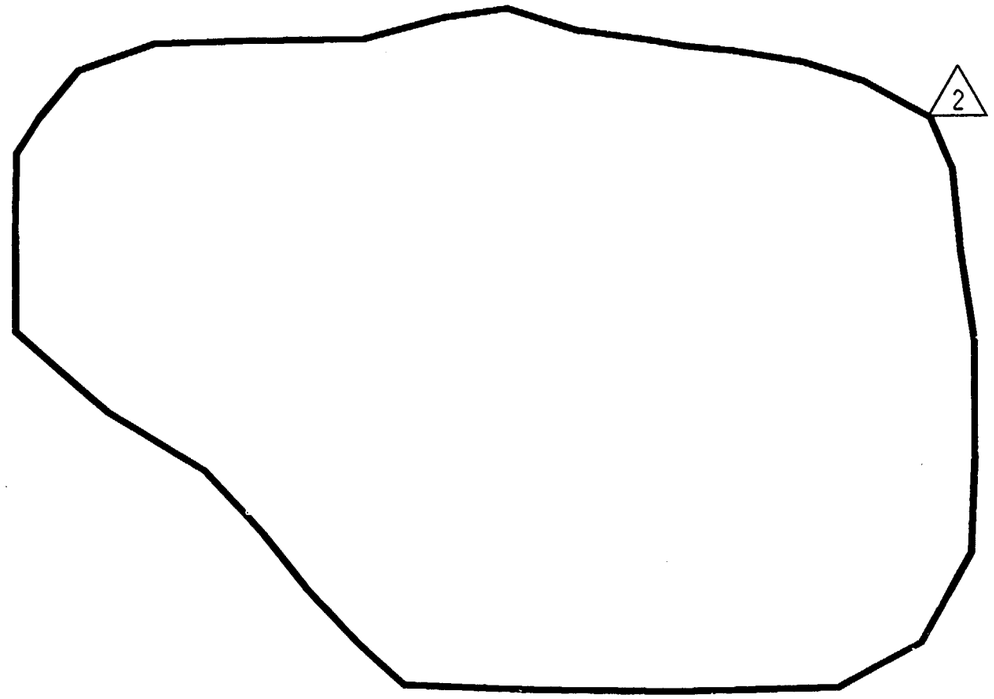

NOTES:

1. FOR NOTES SEE DWG. ISI-SK-005 SH.2.

LEGEND:

SUR - SURFACE EXAMINATION

2

REV.	DATE	DESCRIPTION	BY	CHK	ENGR	ENGR SUPV	ENG MGR
2	8-21-00	INC. DCN ISI-SK-005-7 PER DDR 00-1766	JOR	"INITIALS ON FILE"	"INITIALS ON FILE"		
1	7-7-93	INC. DCN ISI-SK-005-5 FOR RFA 93-0254					
0	09-22-92	INC. DCN ISI-SK-005-4 FOR RFA 92-0232					

SCALE N.T.S.	DESIGNED	DRAWN JFS	DATE 08-31-92

DAVIS-BESSE NUCLEAR POWER STATION
UNIT NO. 1
THE TOLEDO EDISON COMPANY

0

CONTROL ROD DRIVE HOUSING WELDS AND BOLTING DETAILS
CONTAINMENT BUILDING

DRAWING NO.	REV.
ISI-SK-005 SHEET 3	2

DB DATE: 07-28-00 DFN=J:/ISI/ISI05SH3.DGN

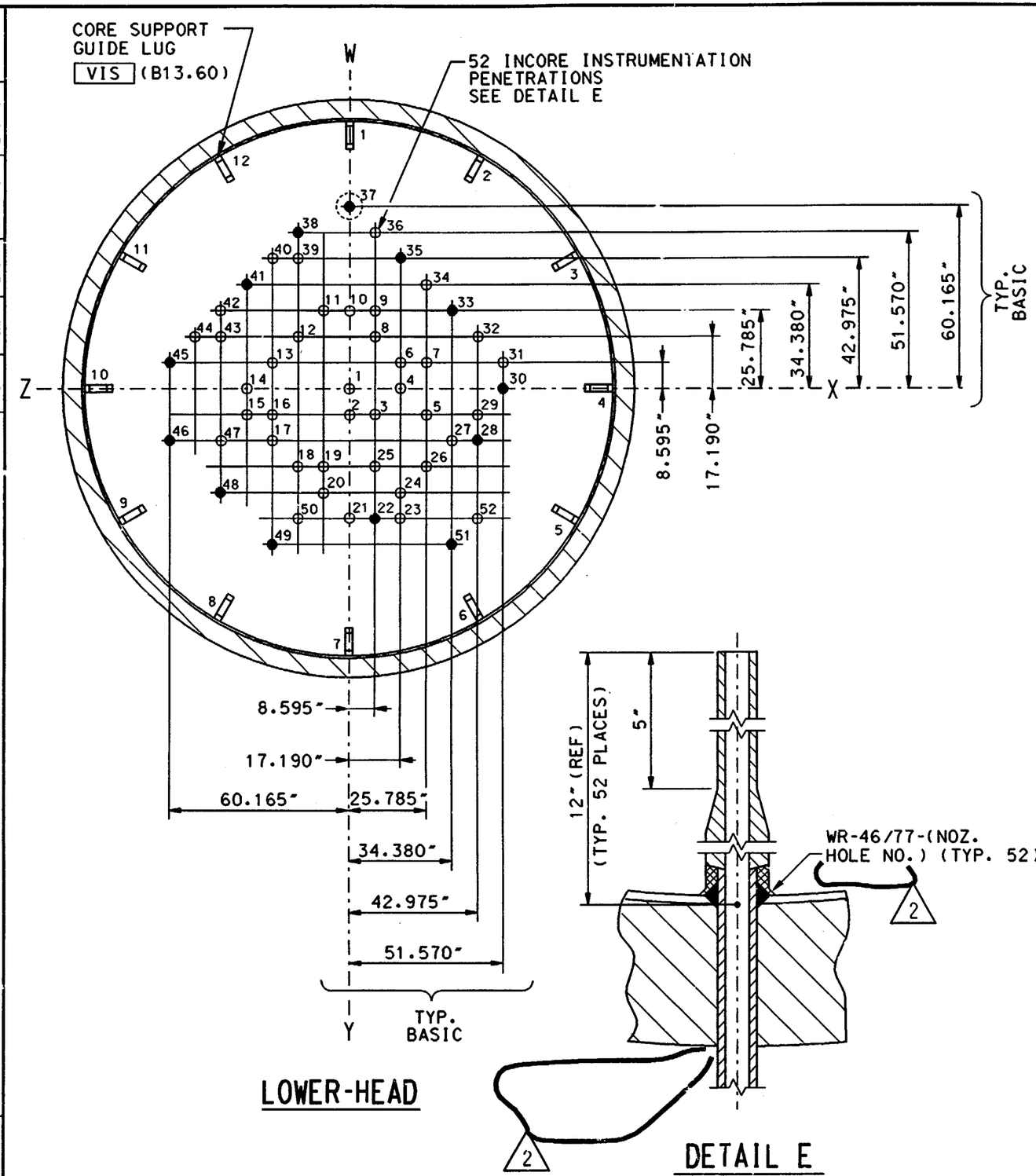

HOLE NO.		NOZZ. MK. NO.
1		186
2	3	187
4	6	
8		
5	7	183
9	10	
11	12	
13	4	
15	16	
17	18	
19	20	
25	26	
21	22	184
23	24	
27	28	
29	32	
33	34	
35	39	
40	41	
42	43	
47	50	
30	31	188
36	37	
38	44	
45	46	
48	49	
51	52	

LEGEND:

VIS - VISUAL (VT-3) EXAMINATION

NOTES:

1. DELETED
2. DELETED
3. EXAMINATIONS ARE DEFERABLE TO THE END OF THE INSPECTION INTERVAL.
4. THE CORE SUPPORT GUIDE LUGS ARE NUMBERED 1 THRU 12 STARTING AT THE W AXIS.

REFERENCE DRAWINGS:

B&W 136457E REACTOR VESSEL DETAILS SHEET 2. (TED #7749-M-503-95)

B&W 109711D MODIFIED INSTRUMENTATION NOZZLE DETAIL

B&W 154624E INSTRUMENTATION NOZZLE DETAIL AND ASSEMBLY (TED #7749-M-503-214)

B&W 154720E MODIFIED INSTRUMENTATION NOZZLE (TED #7749-M-503-224)

REV.	DATE	DESCRIPTION
2	8-2-00	INC. DCN ISI-SK-006-2 PER DDR 00-1766
1	5/31/96	INC. DCN ISI-SK-006-1 PER DDR 95-2486
0	9/12/89	ISSUED FOR SECOND 10 YEAR INSERVICE INSPECTION INTERVAL

BY: JOR — INITIALS ON FILE
CHK: SBW — INITIALS ON FILE
ENGR: MA
ENGR SUPV
ENG MGR

SCALE N.T.S. | DESIGNED | DRAWN WME | DATE 5-3-89

DAVIS-BESSE NUCLEAR POWER STATION
UNIT NO. 1
THE TOLEDO EDISON COMPANY

REACTOR VESSEL INSTRUMENTATION NOZZLE DETAILS
CONTAINMENT BUILDING

DRAWING NO.	REV.
ISI-SK-006	2

DB 07-28-00

DFN=/DBNPS/ISI/ISISK006.DGN

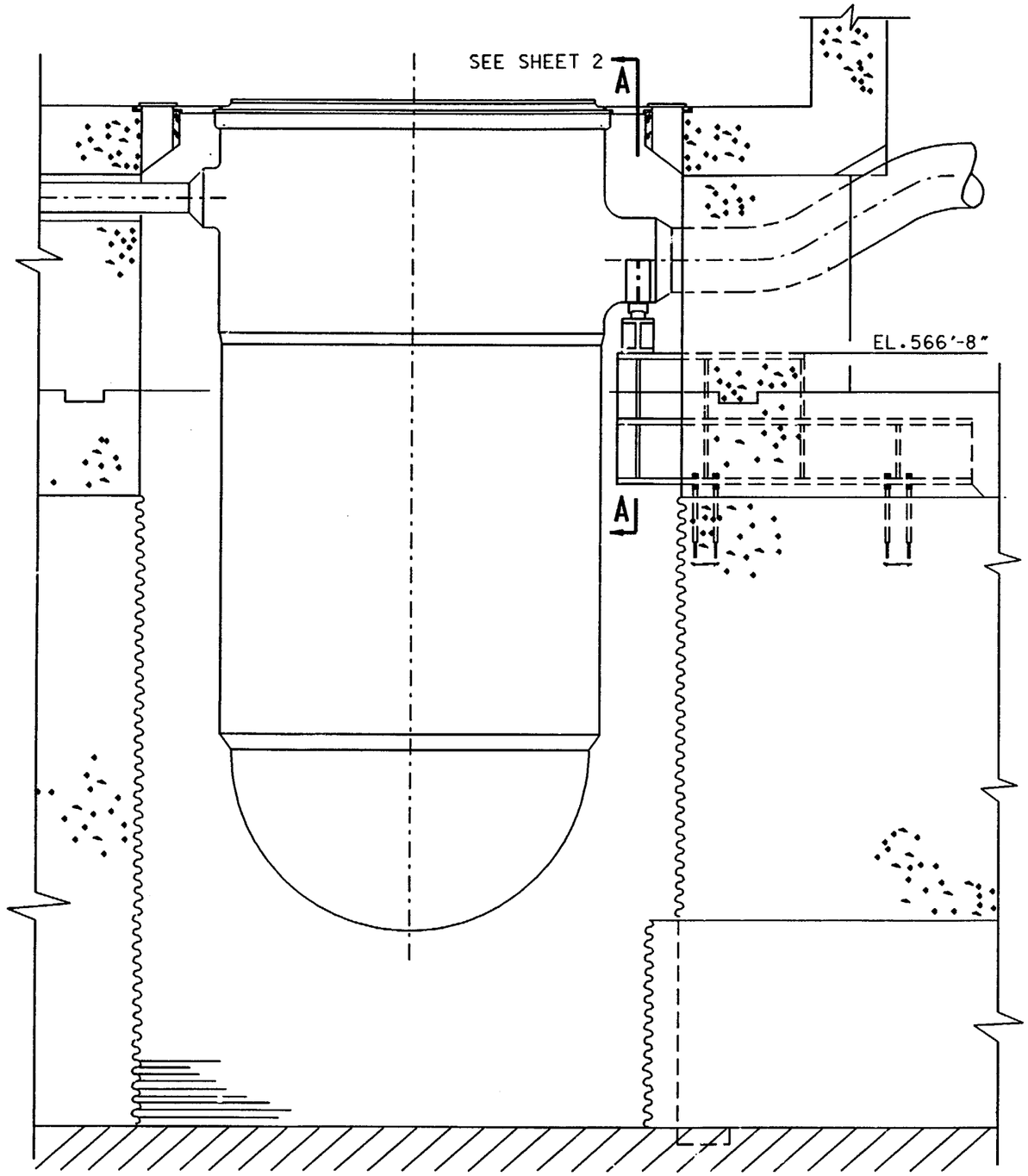

NOTES:

1. A VT-3 EXAMINATION SHALL BE PERFORMED ON EACH OF THE FOUR REACTOR VESSEL SUPPORTS. THE ASME SECTION XI NUMBER IS F1.40. (3)

2. THE REACTOR VESSEL SUPPORTS ARE LOCATED AT EACH OF THE FOUR 28 IN. DIA. INLET NOZZLES. REFER TO DRAWING ISI-SK-003.

REFERENCE DRAWINGS:

B&W 154639E REACTOR VESSEL SUPPORT ASSY. AND DETAILS. (TED #7749-M-503-49)

C-175 REACTOR BEAM-SUPPORT DETAILS, SHEET 1.

B&W 154620E DETAIL AND SUB ASSY. INLET NOZZLE (TED #7749-M-503-217)

REV.	DATE	DESCRIPTION
3	8-21-00	INC. DCN ISI-SK-007-2 PER DCR 00-1766
2	9-30-92	INC. DCN ISI-SK-007-1 FOR DCR 91-0011
1	9-20-90	ISSUED FOR SECOND 10 YEAR INSERVICE INSPECTION INTERVAL

JOR	SBW	"INITIALS ON FILE"	"INITIALS ON FILE"	
BY	CHK	ENGR	ENGR SUPV	ENG MGR

SCALE N.T.S.	DESIGNED	DRAWN CB	DATE 5-26-89

DAVIS-BESSE NUCLEAR POWER STATION
UNIT NO. 1
THE TOLEDO EDISON COMPANY

Q

REACTOR VESSEL SUPPORTS

DRAWING NO.	REV.
ISI-SK-007 SHEET 1	3

DB DATE: 07-28-00 DFN=J:/ISI/ISI07SH1.DGN

REV.	DATE	DESCRIPTION
0	9/8/87	ISSUED FOR SECOND 10 YEAR INSERVICE INSPECTION INTERVAL

CB	RB	LLC/EVC		
BY	CHK	ENGR	ENGR SUPV	ENG MGR

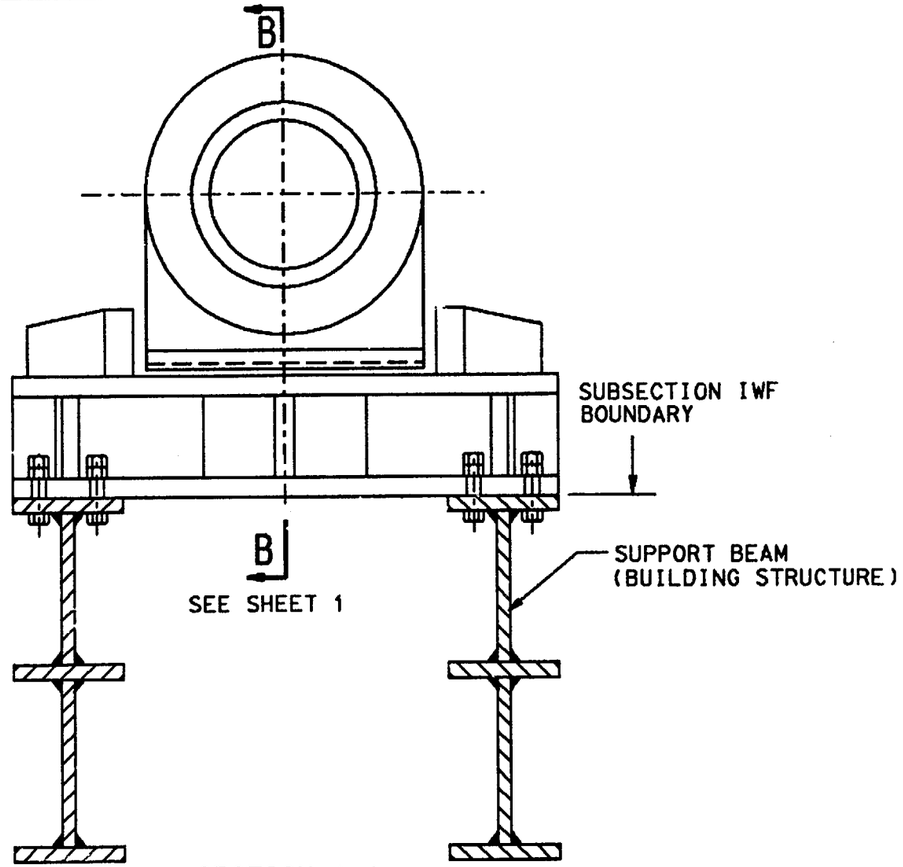

SECTION A-A

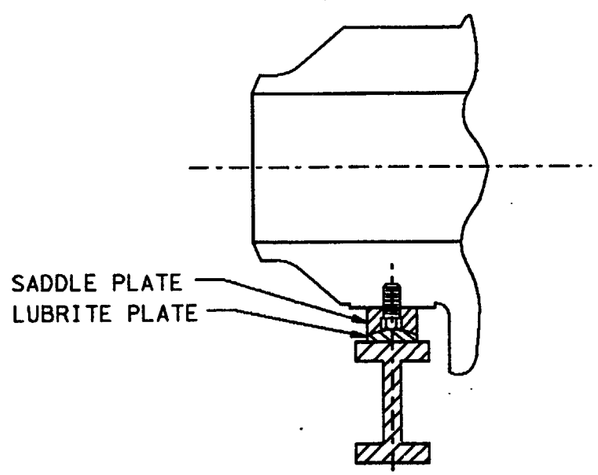

SECTION B-B

NOTES:

1. FOR GENERAL NOTES AND REFERENCES SEE SHEET 1.

SCALE N.T.S.	DESIGNED	DRAWN CB	DATE 5-3-89

DAVIS-BESSE NUCLEAR POWER STATION
UNIT NO. 1
THE TOLEDO EDISON COMPANY

Q

REACTOR VESSEL
SUPPORTS

DRAWING NO.	REV.
ISI-SK-007 SHEET 2 OF 2	0

DFN=QS1:[55,7]ISI07SH2.DGN

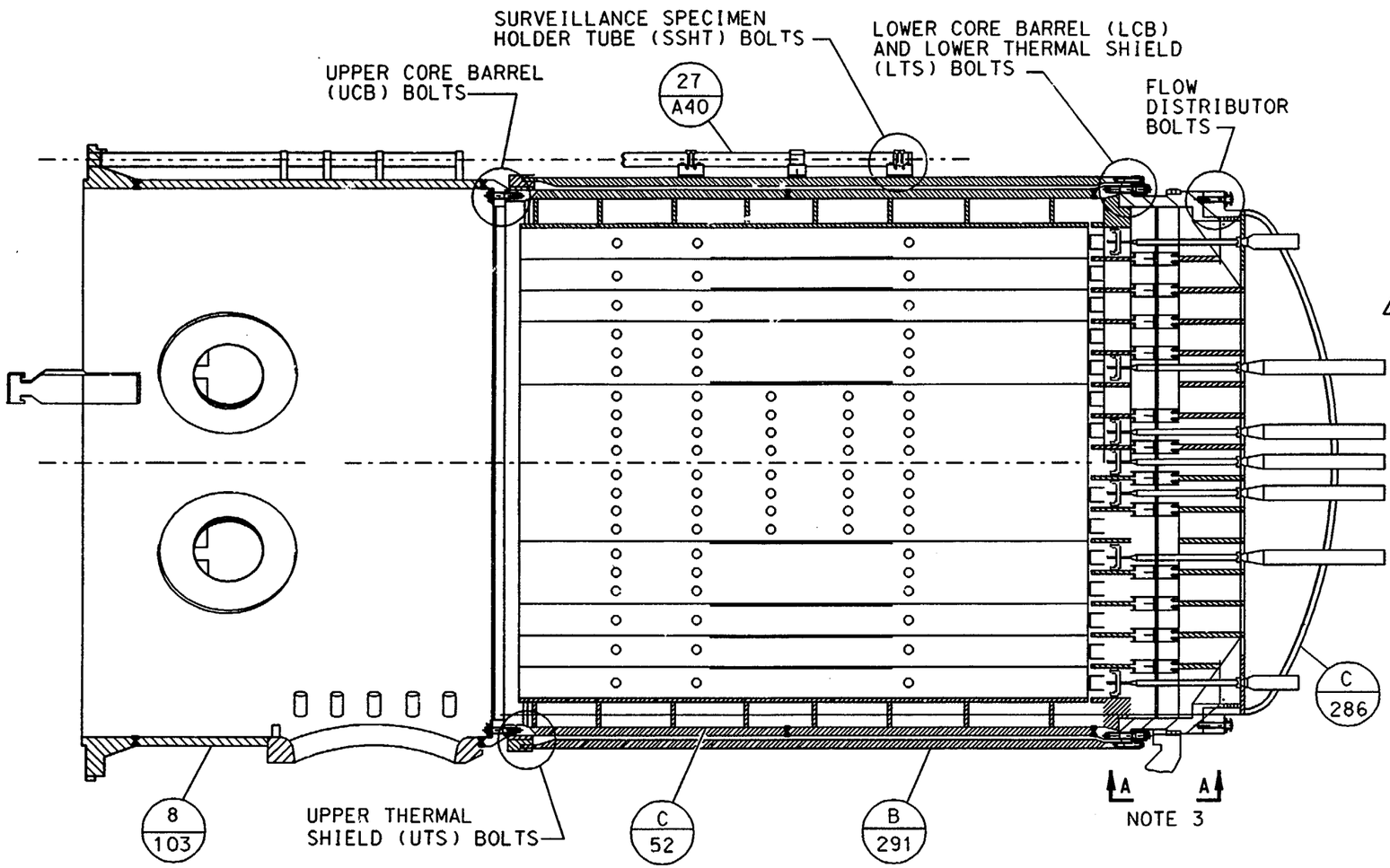

NOTES:

1. A VT-3 EXAMINATION OF THE CORE SUPPORT ASSEMBLY (EXAMINATION CATEGORY B-N-3) SHALL BE PERFORMED ONCE DURING EACH 10 YEAR INSPECTION INTERVAL. THE VT-3 EXAMINATION SHALL BE PERFORMED AFTER THE CORE SUPPORT ASSEMBLY HAS BEEN REMOVED FROM THE REACTOR VESSEL.
2. DELETED. (1)
3. VIEW A-A IS SHOWN ON DRAWING ISI-SK-009 SHEET 7.

REFERENCE DRAWINGS:

B&W 27123F CORE BARREL ASSEMBLY (TED# 7749-M-503-166)

ITEM	QTY.	DRAWING NUMBER
UPPER CORE BARREL BOLTS	120	ISI-SK-009 SHEET 1 DETAIL A
UPPER THERMAL SHIELD BOLTS	60	ISI-SK-009 SHEET 2 DETAIL B
LOWER CORE BARREL BOLTS	108	ISI-SK-009 SHEET 3 DETAIL C
LOWER THERMAL SHIELD BOLTS	96	ISI-SK-009 SHEET 3 DETAIL C
FLOW DISTRIBUTOR BOLTS	96	ISI-SK-009 SHEET 4 DETAIL D
SURVEILLANCE SPECIMEN HOLDER TUBE BOLTS	72	ISI-SK-009 SHEET 5 DETAIL E
VENT VALVE BOLTS	8	ISI-SK-009 SHEET 6 DETAIL F
GUIDE BLOCK BOLTS	24	ISI-SK-009 SHEET 7 DETAIL G

ASSEMBLY NO.	DESCRIPTION
B-103	CORE SUPPORT SHIELD ASSEMBLY
B-291	THERMAL SHIELD ASSEMBLY
C-52	CORE BARREL ASSEMBLY
C-286	LOWER GRID FLOW DISTRIBUTOR & GUIDE TUBE ASSEMBLY
27-A40	SURVEILLANCE SPECIMEN HOLDER TUBE ASSEMBLY

REV.	DATE	DESCRIPTION
1	8-21-00	INC. DCN ISI-SK-008-1 PER DDR 00-1766
0	9-12-89	ISSUED FOR SECOND 10 YEAR INSERVICE INSPECTION INTERVAL

JOB	BY	CHK	ENGR	ENGR SUPV	ENG MGR
	SBW			ON FILE	

INITIALS

SCALE N.T.S. | DESIGNED | DRAWN WME | DATE 7-10-89

DAVIS-BESSE NUCLEAR POWER STATION
UNIT NO. 1
THE TOLEDO EDISON COMPANY

CORE SUPPORT ASSEMBLY

DRAWING NO.	REV.
ISI-SK-008	1

DB: 08-01-00 DFN=J:/ISI/ISISK008.DGN

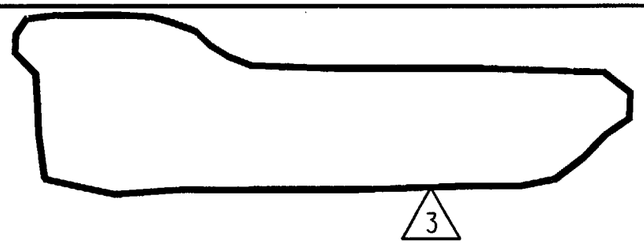

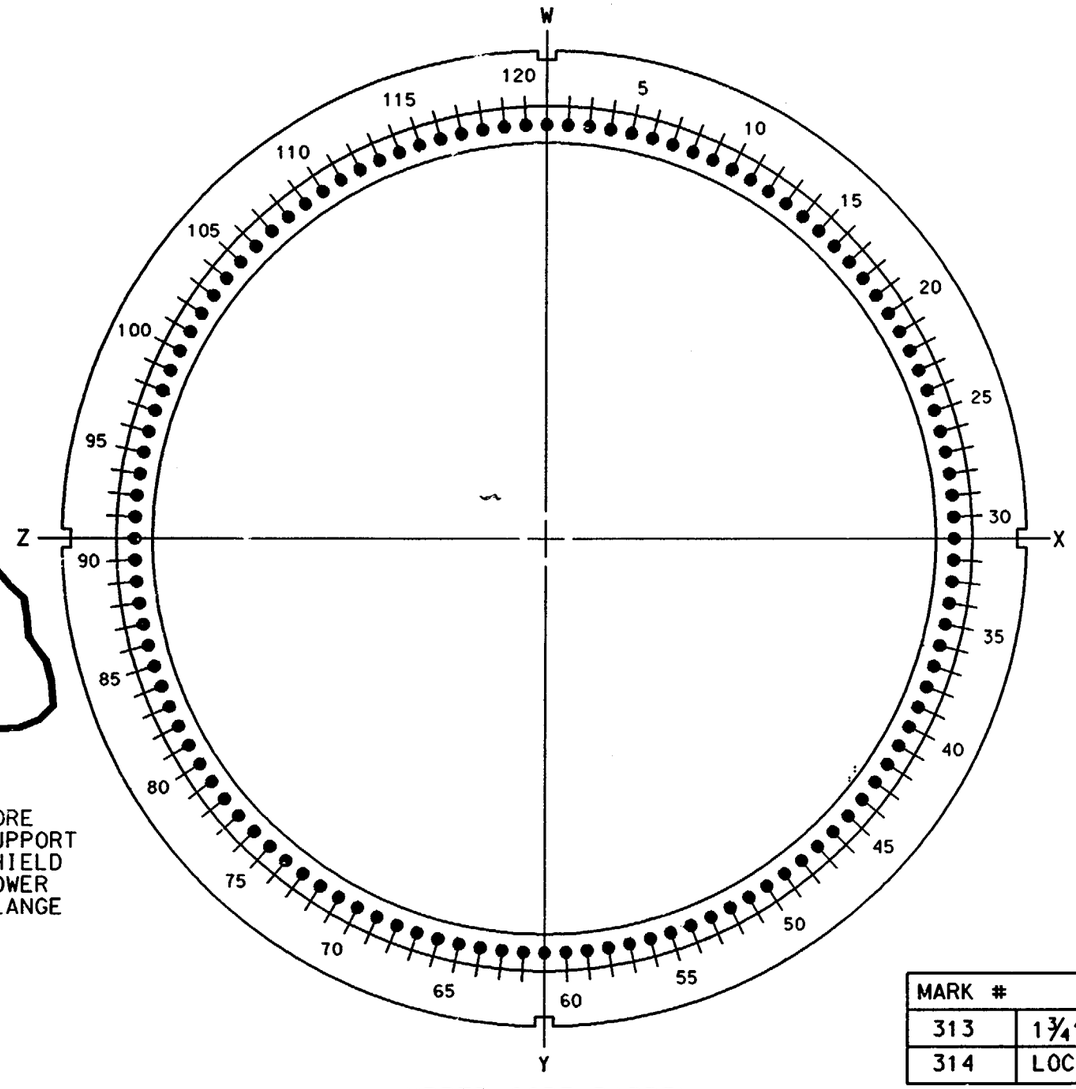

UPPER CORE BARREL
BOLT HOLE NUMBERS

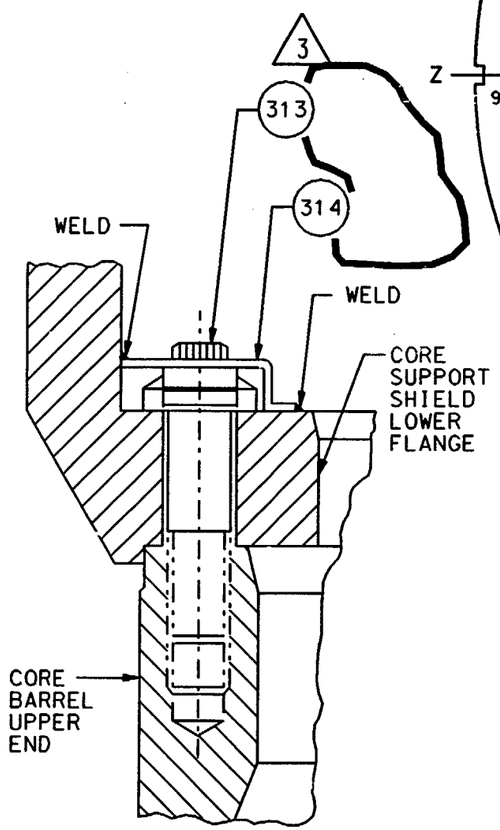

UPPER CORE BARREL (UCB)
BOLTS (QTY. 120)
DETAIL A

REFERENCE DRAWINGS:

B&W 27123F CORE BARREL ASSEMBLY (TED #7749-M-503-166)

MARK #	DESCRIPTION	MATERIAL
313	1¾" DIA. 8UNC-2A UCB BOLT (120)	A453 GR.660
314	LOCKING CLIP (WELDED) (120)	

REV.	DATE	DESCRIPTION
3	8-27-00	INC. DCN ISI-SK-009-4 PER DDR 00-1766
2	9-30-92	INC. DCN ISI-SK-009-1 FOR DCR 91-0011
1	9-20-90	ISSUED FOR SECOND 10 YEAR INSERVICE INSPECTION INTERVAL

JOR	KBW			
		"INITIALS ON FILE"	"INITIALS ON FILE"	
BY	CHK	ENGR	ENGR SUPV	ENG MGR

SCALE N.T.S.	DESIGNED	DRAWN	DATE 7-10-89

DAVIS-BESSE NUCLEAR POWER STATION
UNIT NO. 1
THE TOLEDO EDISON COMPANY

Q

REACTOR VESSEL CORE SUPPORT
ASSEMBLY BOLTING DETAILS

DRAWING NO.	REV.
ISI-SK-009 SHEET 1	3

DB DATE 07-28-00 DFN=J:/ISI/ISI09SH1.DGN

REV.	DATE	DESCRIPTION	BY	CHK	ENGR	ENGR SUPV	ENG MGR
2	8-27-00	INC. DCN ISI-SK-009-5 PER DDR 00-1766	JOR	SBW	"INITIALS ON FILE"		
1	9-20-90	ISSUED FOR SECOND 10 YEAR INSERVICE INSPECTION INTERVAL					

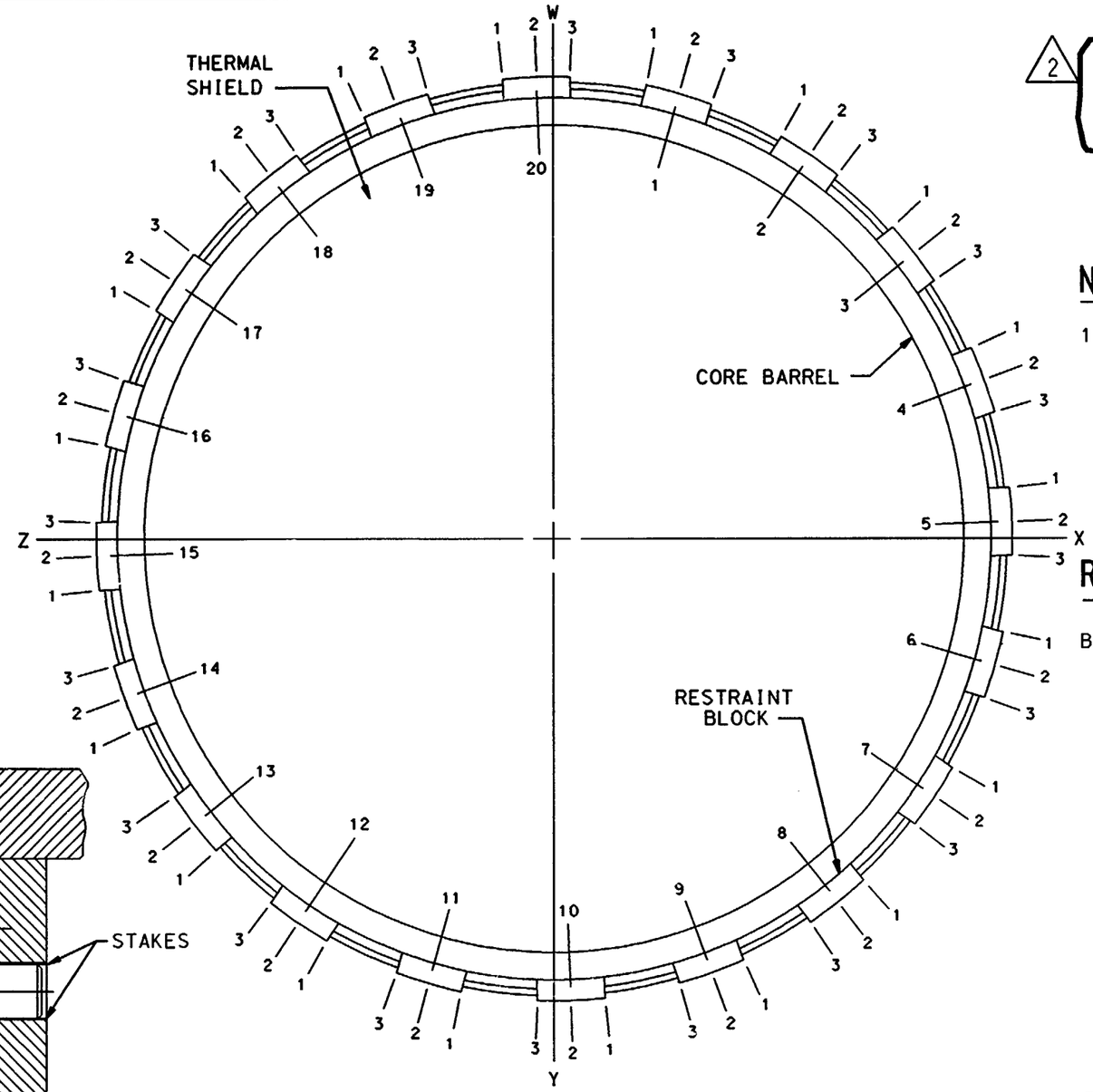

UPPER THERMAL SHIELD
BOLT HOLE NUMBERS

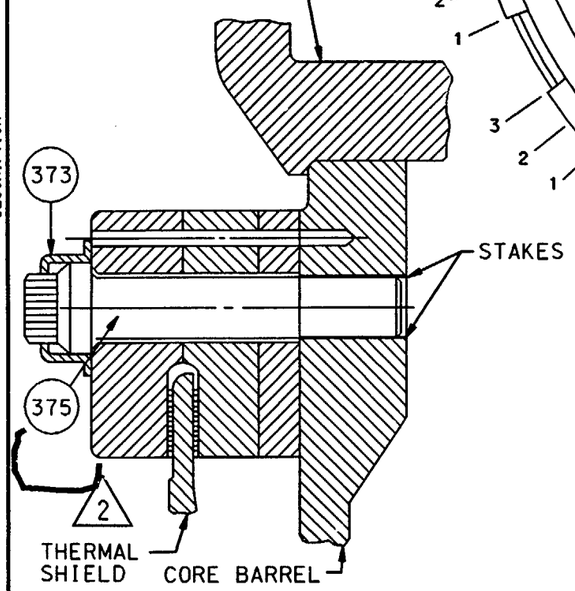

UPPER THERMAL SHIELD (UTS)
BOLTS (QTY. 60)
DETAIL B

MARK NO.	DESCRIPTION	MATERIAL
373	LOCKING CLIP (WELDED) (60)	
375	1½" DIA. 8UNC-2A UTS BOLT (60)	A453 GR.660

NOTES:

1. THERE ARE THREE (3) MK375 UPPER THERMAL SHIELD (UTS) BOLTS (A453, GRADE 660, CONDITION A) FOR EACH OF THE 20 RESTRAINT BLOCKS. THE BOLT HOLE NUMBER CONSISTS OF THE RESTRAINT BLOCK NUMBER FOLLOWED BY THE BOLT NUMBER (1,2 OR 3).

REFERENCE DRAWINGS:

B&W 125670D THERMAL SHIELD UPPER RESTRAINT ARRANGEMENT (TED# 7749-M-503-101)

SCALE N.T.S.	DESIGNED	DRAWN WME	DATE 7-10-89

DAVIS-BESSE NUCLEAR POWER STATION
UNIT NO. 1
THE TOLEDO EDISON COMPANY

Q

REACTOR VESSEL CORE SUPPORT ASSEMBLY BOLTING DETAILS

DRAWING NO.	REV.
ISI-SK-009 SHEET 2	2

DB: 07-28-00 DFN=J:/ISI/ISI09SH2.DGN

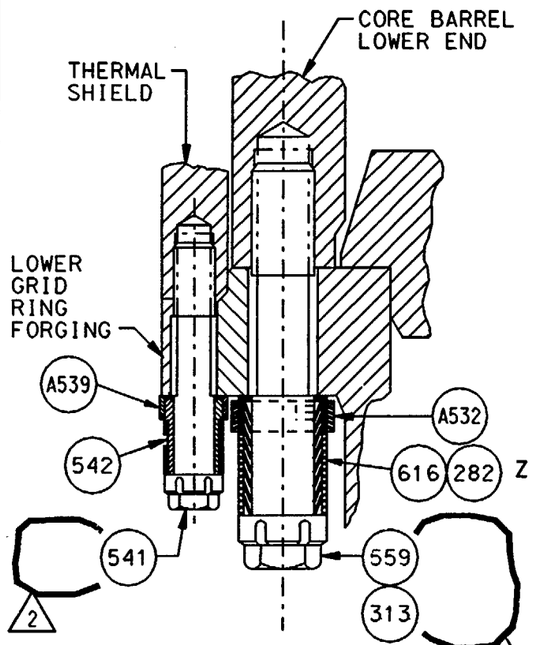

LOWER CORE BARREL (LCB)
BOLTS (QTY. 108)
AND LOWER THERMAL SHIELD
(LTS) BOLTS (QTY 96)

DETAIL C

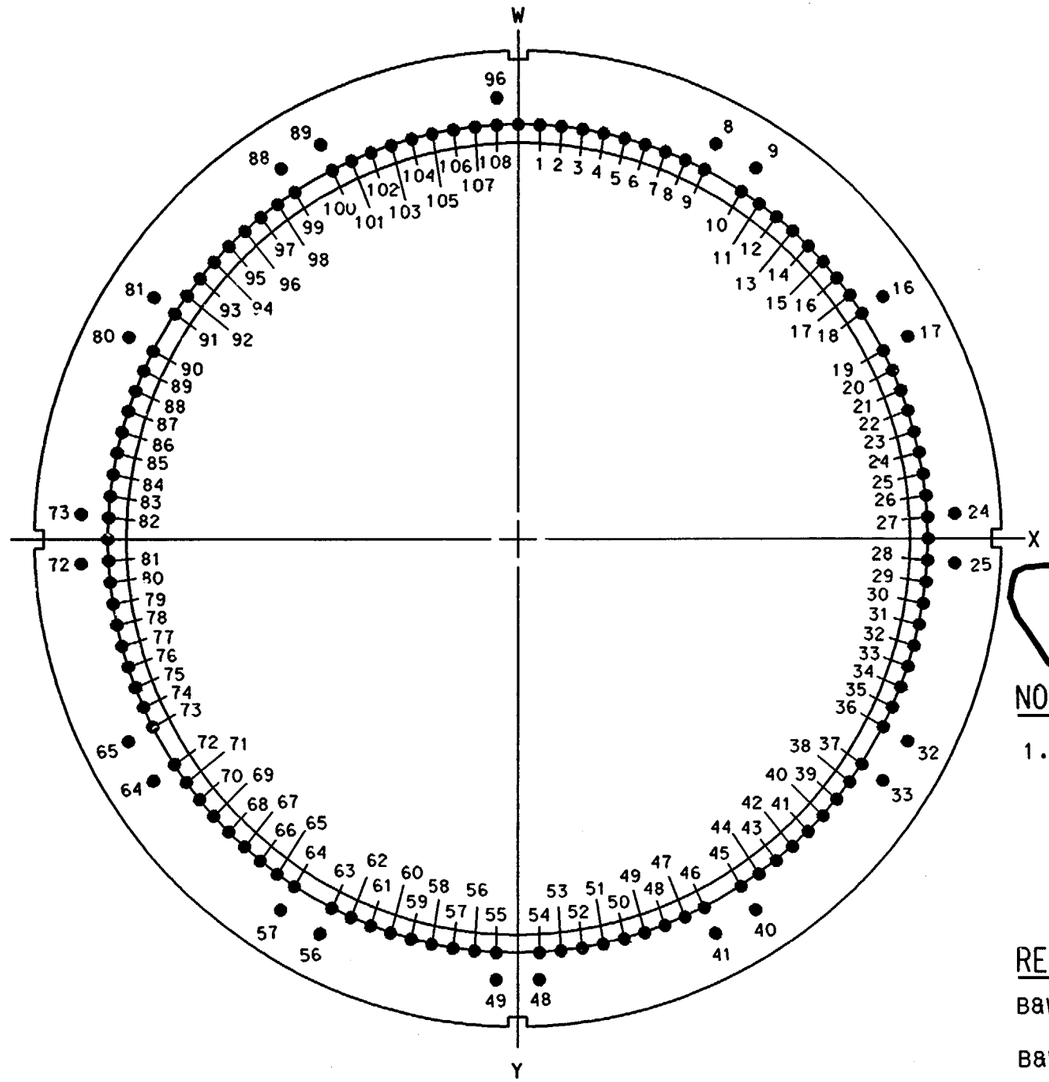

LOWER CORE BARREL/LOWER THERMAL SHIELD
BOLT HOLE NUMBERS

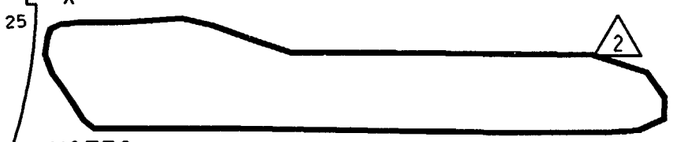

NOTES:

1. THERE ARE FOUR (4) MK313 LOWER CORE BARREL (LCB) BOLTS (A453, GRADE 660, CONDITION A) AND FOUR (4) MK282 LOCKING CLIPS (WELDED) ADJACENT TO EACH OF THE TWELVE (12) GUIDE BLOCKS. THE REMAINING 60-MK559 LOWER CORE BARREL (LCB) BOLTS AND 60 LOCKING CUP ASSEMBLIES ARE SHOWN IN DETAIL C.

REFERENCE DRAWINGS:

B&W 27123F	CORE BARREL ASSEMBLY (TED #7749-M-503-166)
B&W 1143542D	LOWER CORE BARREL BOLT (INCONEL X-750) (TED #12501-M-503-675)
B&W 1143494D	LOWER THERMAL SHIELD BOLT (TED #12501-M-503-504)

MARK #	DESCRIPTION	MATERIAL
A532	LOCKING CUP ASSEMBLY (AS REQ'D)	
A539	LOCKING CUP ASSEMBLY (48)	
541	1" DIA. 8 UNR-2A LTS BOLT (96)	INCONEL X-750
542	COMPRESSION COLLAR (96)	
559	1¾" DIA. 8 UNR-2A LCB BOLT (60)	INCONEL X-750
616	COMPRESSION COLLAR (60)	
313	1¾" DIA. 8 UNC-2A LCB BOLT (48)	A453 GR660
282	LOCKING CLIP (WELDED) (48)	

SCALE N.T.S.	DESIGNED	DRAWN BLN	DATE 7-10-89

DAVIS-BESSE NUCLEAR POWER STATION
UNIT NO. 1
THE TOLEDO EDISON COMPANY

Q

REACTOR VESSEL CORE SUPPORT
ASSEMBLY BOLTING DETAILS

DRAWING NO.	REV.
ISI-SK-009 SHEET 3	2

DB:07-28-00 DFN=J:/ISI/ISI09SH3.DGN

REV.	DATE	DESCRIPTION
2	8-21-00	INC. DCN ISI-SK-0009-6 PER DDR 00-1766
1	9-20-90	ISSUED FOR SECOND 10 YEAR INSERVICE INSPECTION INTERVAL

JOR	SBW	CHK	ENGR	ENGR SUPV	ENG MGR
		BY	INITIALS	ON FILE	

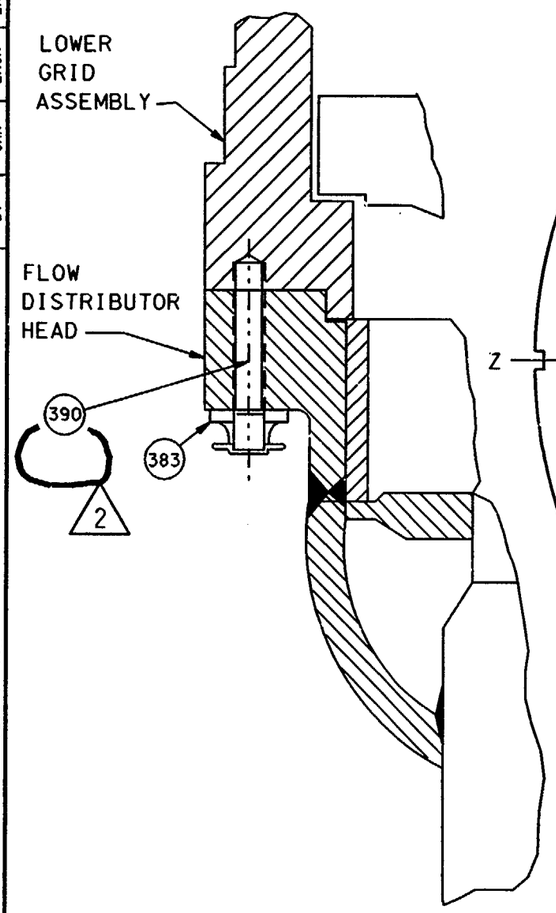

FLOW DISTRIBUTOR BOLTS
QTY. 96
DETAIL D

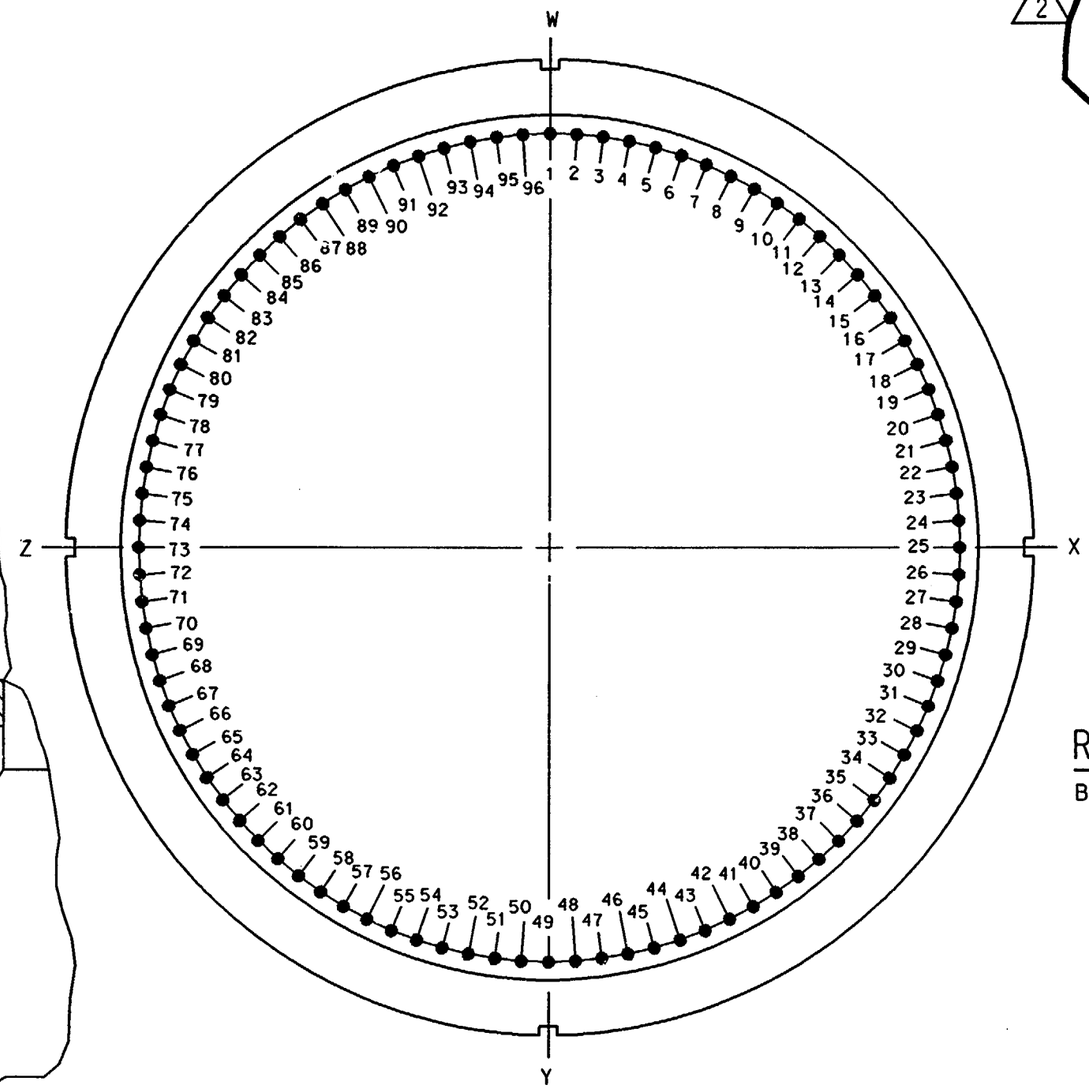

FLOW DISTRIBUTOR
BOLT HOLE NUMBERS

REFERENCE DRAWINGS:

B&W 154683E LOWER GRID, FLOW DISTRIBUTOR
AND GUIDE TUBE ASSEMBLY
(TED# 7749-M-503-92)

MARK NO.	DESCRIPTION	MATERIAL
383	LOCKING CLIP (WELDED) (96)	
390	1" DIA. 8UNC-2A BOLT (96)	A453-65 GR.660

REV.	DATE	DESCRIPTION
2	8-27-00	INC. DCN ISI-SK-0009-7 PER DDR 00-1766
1	9-20-90	ISSUED FOR SECOND 10 YEAR INSERVICE INSPECTION INTERVAL

JOR	CHK	ENGR	ENGR SUPV	ENG MGR
SBW			MRL	

"INITIALS ON FILE"

SCALE N.T.S. | DESIGNED | DRAWN BLN | DATE 7-10-89

DAVIS-BESSE NUCLEAR POWER STATION
UNIT NO. 1
THE TOLEDO EDISON COMPANY

0

REACTOR VESSEL CORE SUPPORT
ASSEMBLY BOLTING DETAILS

DRAWING NO. ISI-SK-009 SHEET 4

REV. 2

DB: 07-29-00 DFN=J:/ISI/ISI09SH4.DGN

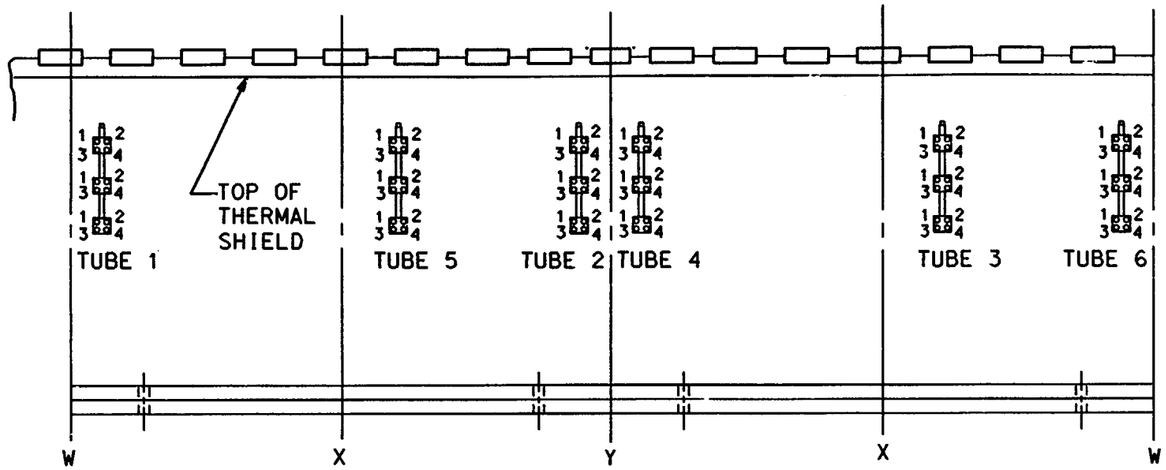

SSHT BOLT HOLE LOCATION

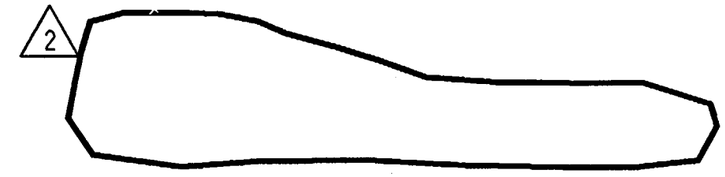

NOTES:

1. THERE ARE FOUR (4) MK557 SURVEILLANCE SPECIMEN HOLDER TUBE (SSHT) BOLTS FOR EACH OF THE THREE (3) TUBE BRACKETS. THE BOLT HOLE NUMBER CONSISTS OF THE TUBE NUMBER FOLLOWED BY THE BRACKET LOCATION AND BOLT NUMBER (1,2,3 OR 4)

REFERENCE DRAWINGS:

B&W 143063E SURVEILLANCE HOLDER TUBE FIELD INSTALLATION (TED# 7749-M-503-172)

B&W 1143510D SSHT INCONEL BOLT (TED# 12501-M-503-514)

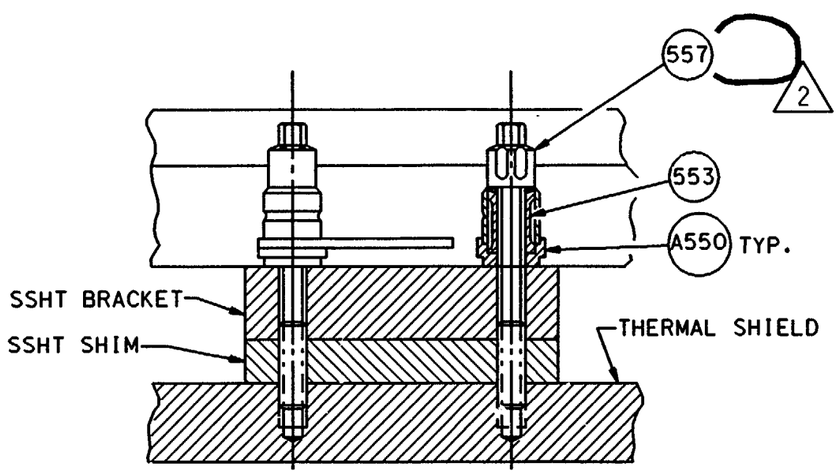

SURVEILLANCE SPECIMEN HOLDER TUBE (SHT) BOLTS (QTY. 72)

DETAIL E

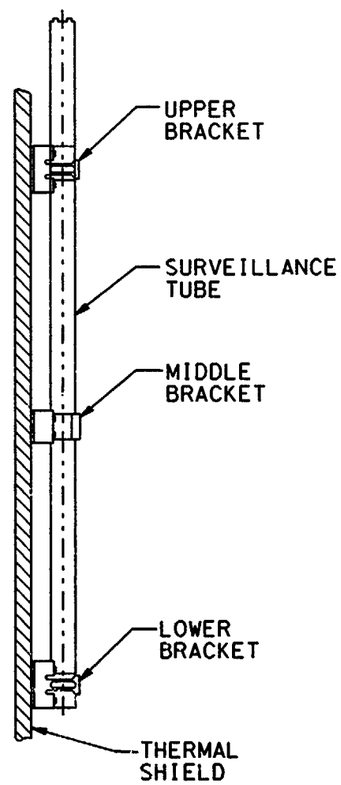

MARK NO.	DESCRIPTION	MATERIAL
A550	LOCKING CUP ASSEMBLY (TYP.)	
553	COMPRESSION SLEEVE (72)	
557	3/4" DIA. 10 UNR-2A SSHT BOLT (72)	INCONEL X-750

SCALE N.T.S.	DESIGNED	DRAWN WME	DATE 7-10-89

DAVIS-BESSE NUCLEAR POWER STATION
UNIT NO. 1
THE TOLEDO EDISON COMPANY

0

REACTOR VESSEL CORE SUPPORT ASSEMBLY BOLTING DETAILS

DRAWING NO.	REV.
ISI-SK-009 SHEET 5	2

DB:07-29-00 DFN=J:/ISI/ISI09SH5.DGN

REV.	DATE	DESCRIPTION
2	8-21-00	INC. DCN ISI-SK-009-8 PER DDR 00-1766
1	9-20-90	ISSUED FOR SECOND 10 YEAR INSERVICE INSPECTION INTERVAL

BY	CHK	ENGR	ENGR SUPV	ENG MGR
JOR	SBW	"INITIALS ON FILE"		

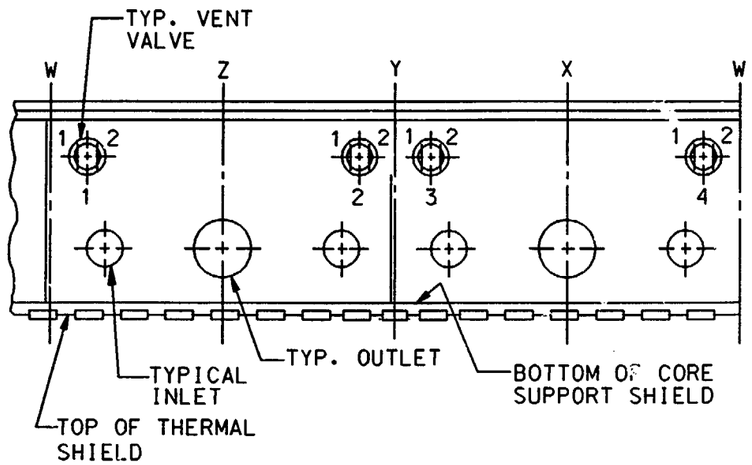

VENT VALVE BOLTING LOCATION

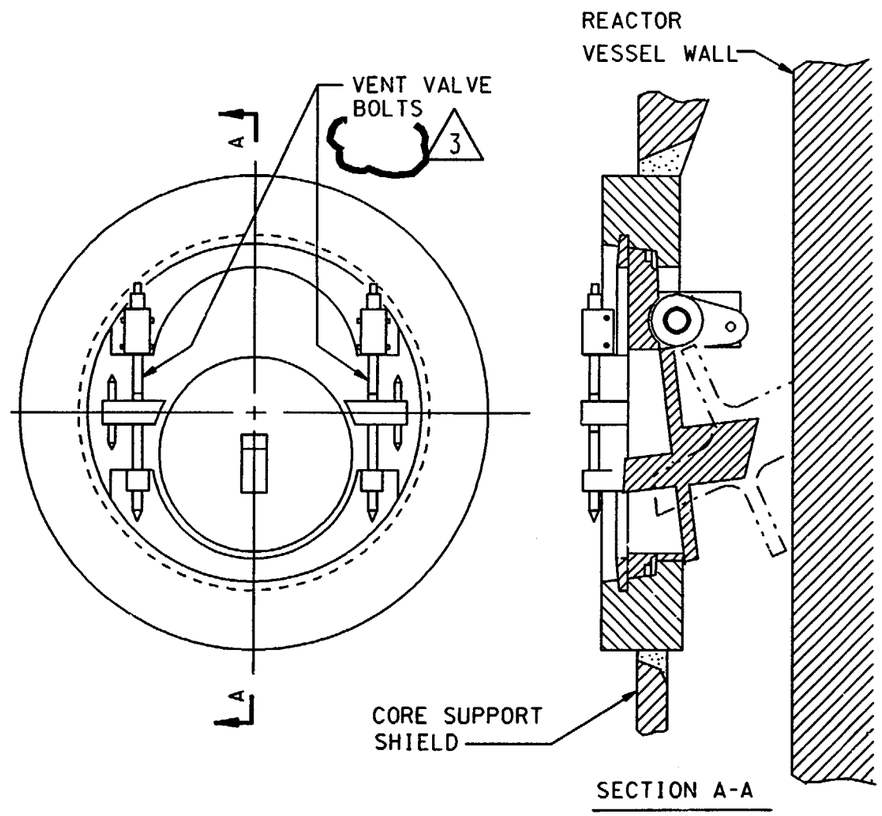

VENT VALVE BOLTS (QTY. 8)

DETAIL F

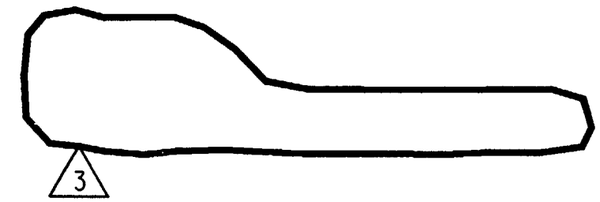

NOTES:

1. THERE ARE TWO (2) BOLTS FOR EACH OF THE FOUR (4) VENT VALVES. THE BOLT HOLE NUMBER CONSISTS OF THE VENT VALVE NUMBER FOLLOWED BY THE BOLT NUMBER (1 OR 2).

REFERENCE DRAWINGS:

B & W 27123F CORE SUPPORT ASSEMBLY (TED# 7749-M-503-166)

B & W 20762H (TED# 7749-M-503-150)

REV.	DATE	DESCRIPTION
3	8-21-00	INC. DCN ISI-SK-009-9 PER DDR 00-1766
2	9-30-92	INC. DCN ISI-SK-009-2 FOR DCR 91-0011
1	9-20-90	ISSUED FOR SECOND 10 YEAR INSERVICE INSPECTION INTERVAL

JOR	SBW	"INITIALS ON FILE"	"INITIALS ON FILE"	—	—
BY	CHK	ENGR	ENGR SUPV	ENG MGR	

SCALE N.T.S.	DESIGNED	DRAWN CB	DATE 7-10-89

DAVIS-BESSE NUCLEAR POWER STATION
UNIT NO. 1
THE TOLEDO EDISON COMPANY

REACTOR VESSEL CORE SUPPORT ASSEMBLY BOLTING DETAILS

DRAWING NO.	REV.
ISI-SK-009 SHEET 6	3

DB DATE: 07-28-00 DFN=J:/ISI/ISI09SH6.DGN

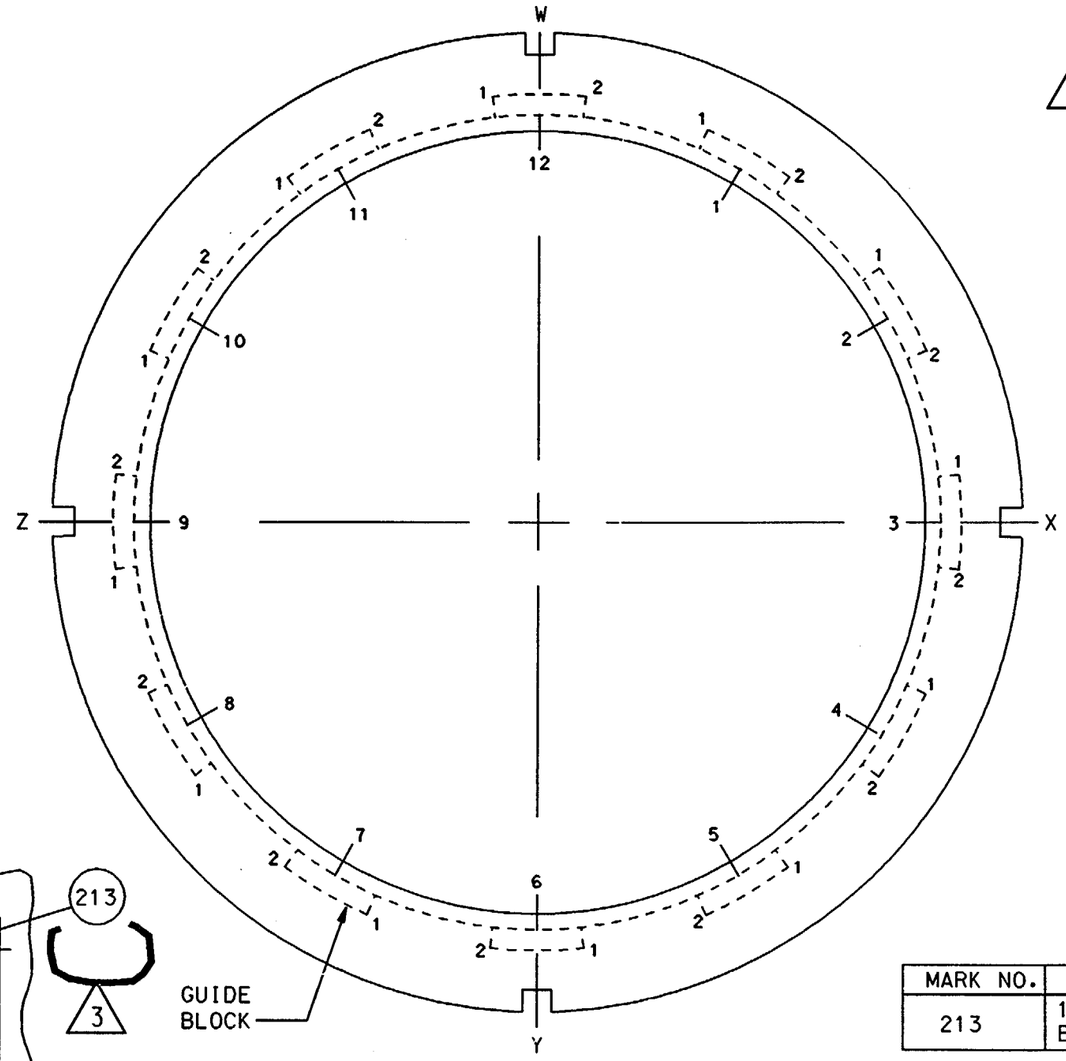

NOTES:

1. THERE ARE TWO (2) BOLTS FOR EACH OF THE TWELVE GUIDE BLOCKS. THE BOLT HOLE NUMBER CONSISTS OF THE GUIDE BLOCK NUMBER FOLLOWED BY THE BOLT NUMBER (1 OR 2).

REFERENCE DRAWINGS:

B & W 27123F CORE SUPPORT ASSEMBLY
(TED# 7749-M-503-166)

MARK NO.	DESCRIPTION	MATERIAL
213	1" DIA. 8UNC-2A GUIDE BLOCK BOLTS (24)	A193 GRB8

GUIDE BLOCK BOLT
HOLE NUMBERS

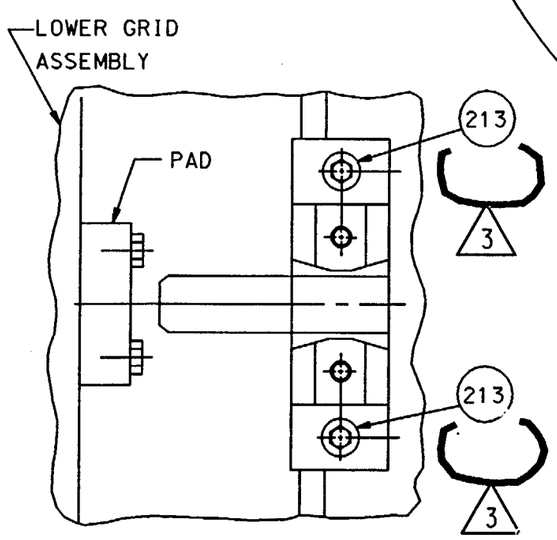

GUIDE BLOCK BOLTS (QTY 24)
(VIEW A-A OF DWG. ISI-SK-008)
DETAIL G

REV.	DATE	DESCRIPTION	BY	CHK	ENGR	ENGR SUPV	ENG MGR
3	8-21-00	INC. DCN ISI-SK-009-10 PER DDR 00-1766	JOR	SBW	"INITIALS ON FILE"	"INITIALS ON FILE"	
2	9-30-92	INC. DCN ISI-SK-009-3 FOR DCR 91-0011					
1	9-20-90	ISSUED FOR SECOND 10 YEAR INSERVICE INSPECTION INTERVAL					

SCALE N.T.S.	DESIGNED	DRAWN CB	DATE 7-10-89

DAVIS-BESSE NUCLEAR POWER STATION
UNIT NO. 1
THE TOLEDO EDISON COMPANY

REACTOR VESSEL CORE SUPPORT
ASSEMBLY BOLTING DETAILS

DRAWING NO.	REV.
ISI-SK-009 SHEET 7	3

DB DATE: 07-28-00 DFN=J:/ISI/ISI09SH7.DGN

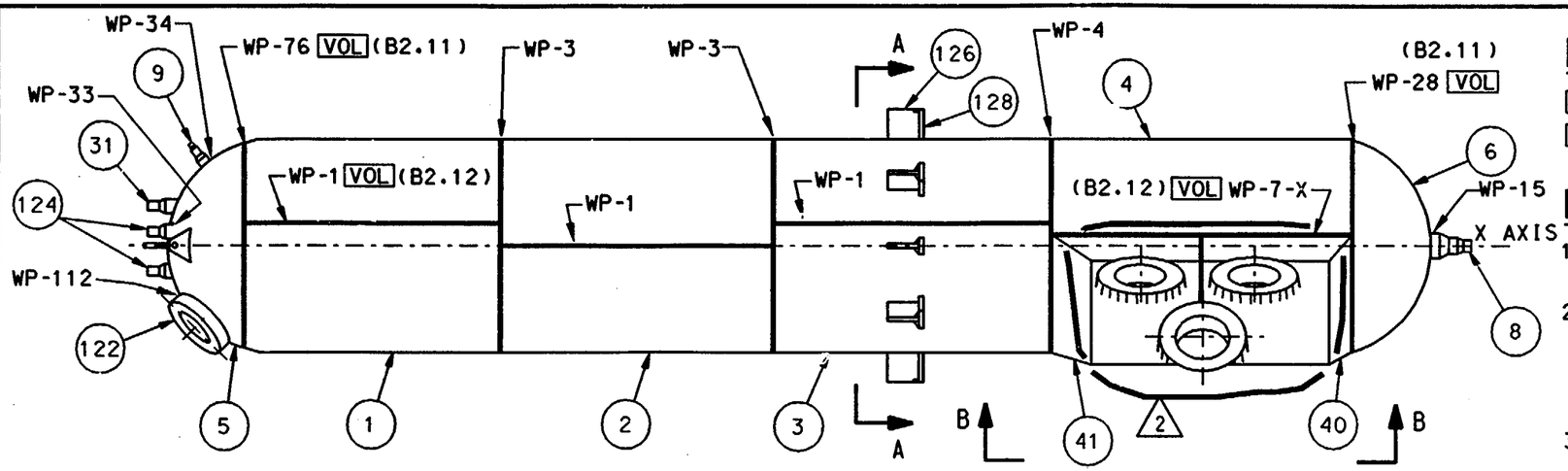

LEGEND:

VOL - VOLUMETRIC EXAMINATION

SUR - SURFACE EXAMINATION

NOTES:

1. THE WELD IDENTIFICATION NUMBERS ARE PRECEEDED BY "RC-PZR-"
2. FOR THE INSERVICE INSPECTION OF STUDS AND NUTS, THE HEATER BUNDLE COVER ASSEMBLIES ARE IDENTIFIED AS NUMBERS 1, 2 AMD 3. (EXAMPLE: 1 HEATER BELT COVER ASSEMBLY NO.1).
3. THE SUPPORT ATTACHMENTS ARE NUMBERED 1 THRU 8 STARTING AT THE W AXIS.

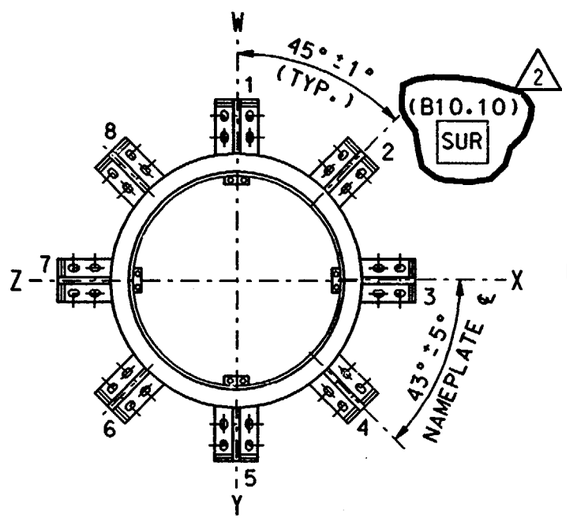

SECTION A-A (NOTE 3)

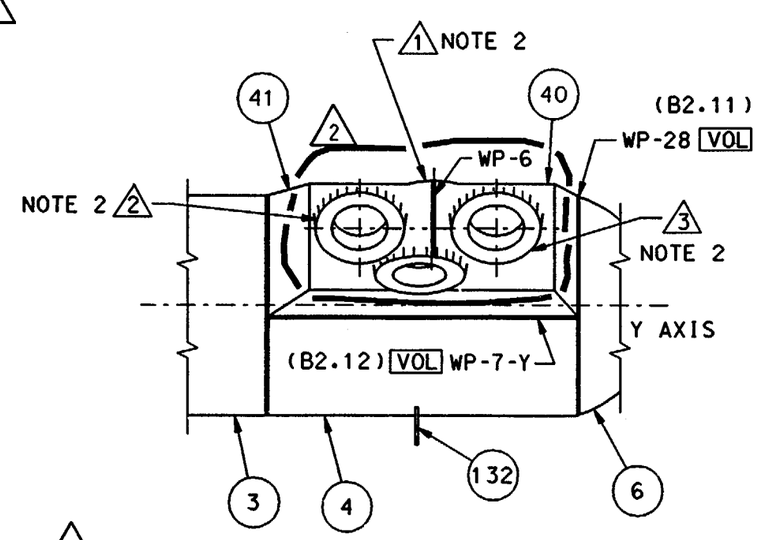

SECTION B-B

MARK #	DESCRIPTION	MATERIAL
1	UPPER SHELL	SA516 GR.70
2	SHELL	SA516 GR.70
3	SHELL	SA516 GR.70
4	HEATER BELT SHELL	SA516 GR.70
5	UPPER HEAD	SA516 GR.70
6	BOTTOM HEAD	SA516 GR.70
8	10" DIA. SURGE NOZZLE	A508 CL1
9	4" DIA. SPRAY NOZZLE	A508 CL1
31	2½" DIA. RELIEF NOZZLE	A508 CL1
40	LOWER HEATER BELT FORGING	A508 CL1
41	UPPER HEATER BELT FORGING	A508 CL1
122	MANWAY FORGING	A508 CL1
124	3" DIA. RELIEF NOZZLE (2)	A508 CL1
126	VERT. VESSEL SUPPORT PLATE	SA516 GR.70
128	HORZ. VESSEL SUPPORT PLATE	SA516 GR.70

2

SUPPORT ATTACHMENT #	WELD #
1	WP-118-W
2	WP-118-W/X
3	WP-118-X
4	WP-118-X/Y
5	WP-118-Y
6	WP-118-Y/Z
7	WP-118-Z
8	WP-118-Z/W

REFERENCE DRAWINGS:

B&W 154592E VESSEL SUBASSEMBLY (TED# 7749-M-507-24)

B&W 154599E HEATER BELT DETAILS (TED# 7749-M-507-32)

B&W 154607E RADIOGRAPHIC OUTLINE (TED# 7749-M-507-34)

B&W 160449E VESSEL SUPPORTS (TED# 7749-M-507-36)

SCALE N.T.S.	DESIGNED	DRAWN WME	DATE 5-3-89

DAVIS-BESSE NUCLEAR POWER STATION
UNIT NO. 1
THE TOLEDO EDISON COMPANY

0

PRESSURIZER OUTLINE
CONTAINMENT BUILDING

DRAWING NO.	REV.
ISI-SK-020	2

DB:07-31-00 DFN=J:/ISI/ISISK020.DGN

REV.	DATE	DESCRIPTION
2	8-21-00	INC. DCN ISI-SK-020-2 PER DDR 00-1766
1	9-20-90	ISSUED FOR SECOND 10 YEAR INSERVICE INSPECTION INTERVAL

BY	CHK	ENGR	ENGR SUPV	ENG MGR
JOR	SBW	"INITIALS ON FILE"		

MARK #	DESCRIPTION	MATERIAL
5	UPPER HEAD	SA516 GR70
9	4" DIA. SPRAY NOZZLE	A508 CL1
31	2½" DIA. RELIEF NOZZLE	A508 CL1
32	2½" DIA. RELIEF NOZZLE SAFE END	SA182 TP-F316
45	4" DIA. SPRAY NOZZLE SAFE END	SB-166
78	1" DIA. VENT NOZZLE (EXEMPT)	SB-166
122	MANWAY FORGING	A508 CL1
124	3" DIA. RELIEF NOZZLE (2)	A508 CL1
125	3" DIA. RELIEF NOZZLE SAFE END (2)	SA182 TP-F316

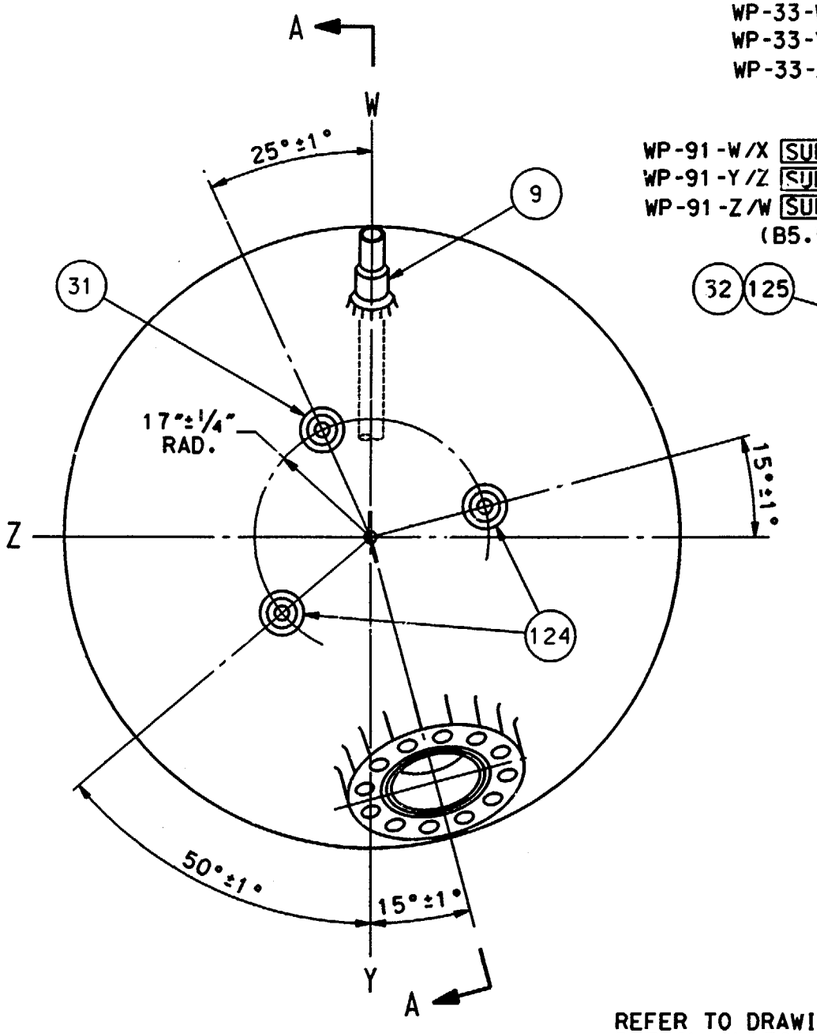

UPPER HEAD
PLAN VIEW

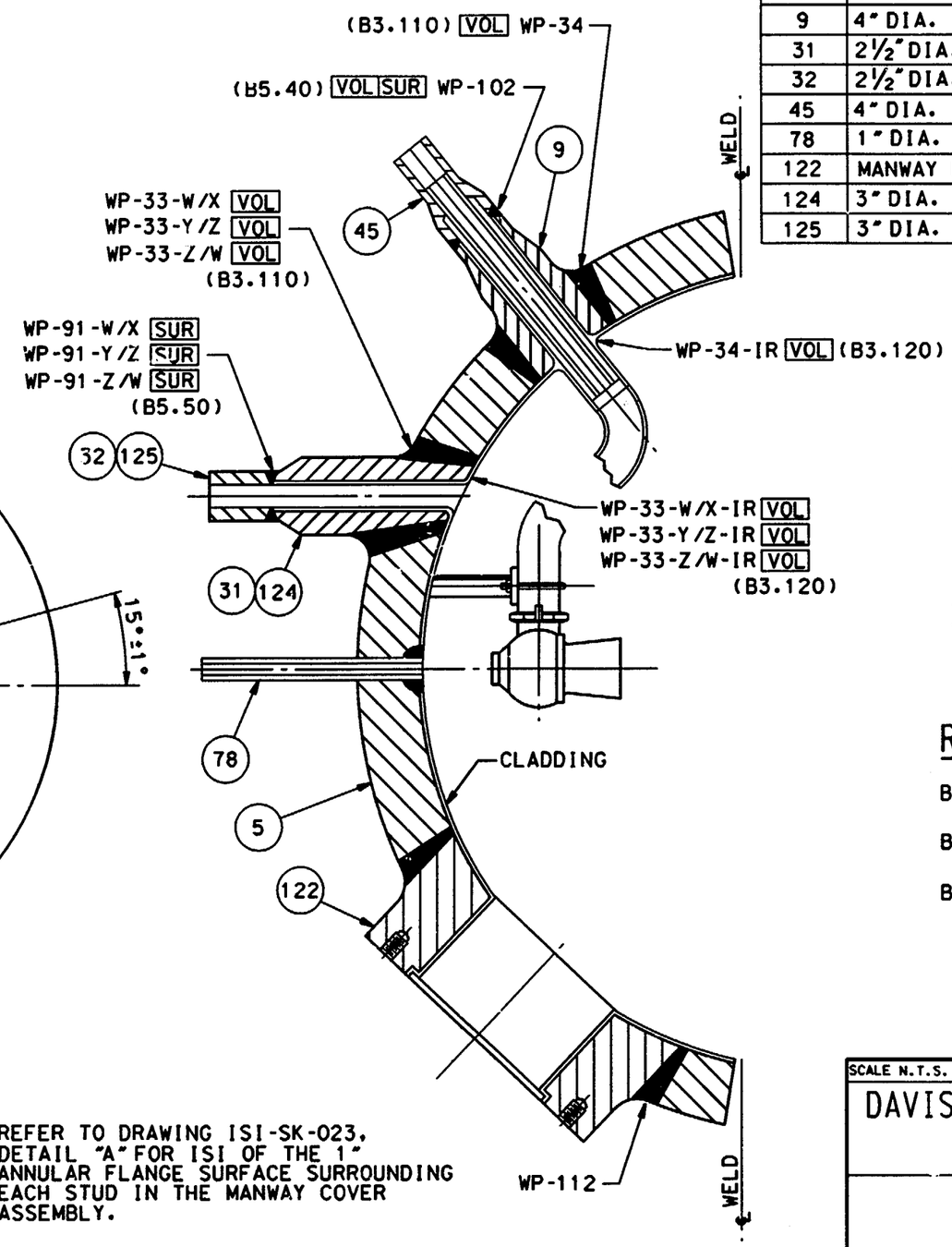

SECTION A-A

REFER TO DRAWING ISI-SK-023, DETAIL "A" FOR ISI OF THE 1" ANNULAR FLANGE SURFACE SURROUNDING EACH STUD IN THE MANWAY COVER ASSEMBLY.

LEGEND:

VOL - VOLUMETRIC EXAMINATION
SUR - SURFACE EXAMINATION
VIS - VISUAL (VT-1) EXAMINATION

NOTES:

1. THE WELD IDENTIFICATION NUMBERS ARE PRECEEDED BY "RC-PZR-"

REFERENCE DRAWINGS:

B&W 154594E UPPER HEAD ASSEMBLY AND DETAILS (TED# 7749-M-507-25)

B&W 154601E 4 IN. SPRAY NOZZLE DETAILS (TED# 7749-M-507-35)

B&W 154602E MISC. NOZZLE DETAILS SHEET 1 (TED# 7749-M-507-37)

SCALE N.T.S.	DESIGNED	DRAWN WME	DATE 5-3-89

DAVIS-BESSE NUCLEAR POWER STATION
UNIT NO. 1
THE TOLEDO EDISON COMPANY

PRESSURIZER UPPER HEAD
NOZZLE DETAILS
CONTAINMENT BUILDING

DRAWING NO.	REV.
ISI-SK-021	0

REV.	DATE	DESCRIPTION
0	9-20-90	ISSUED FOR SECOND 10 YEAR INSERVICE INSPECTION INTERVAL

WME	JJS	MDS	ETC
BY	CHK	ENGR	ENGR SUPV	ENG MGR

DFN=QS1:[55,7]ISISK021.DGN

MARK #	DESCRIPTION	MATERIAL
6	LOWER HEAD	SA516 GR70
8	10" DIA. SURGE NOZZLE	A508 CL1
37	10" DIA. SURGE NOZZLE SAFE END	A336 CLF8M
72	SURGE DIFFUSER (EXEMPT)	SA312 TP304

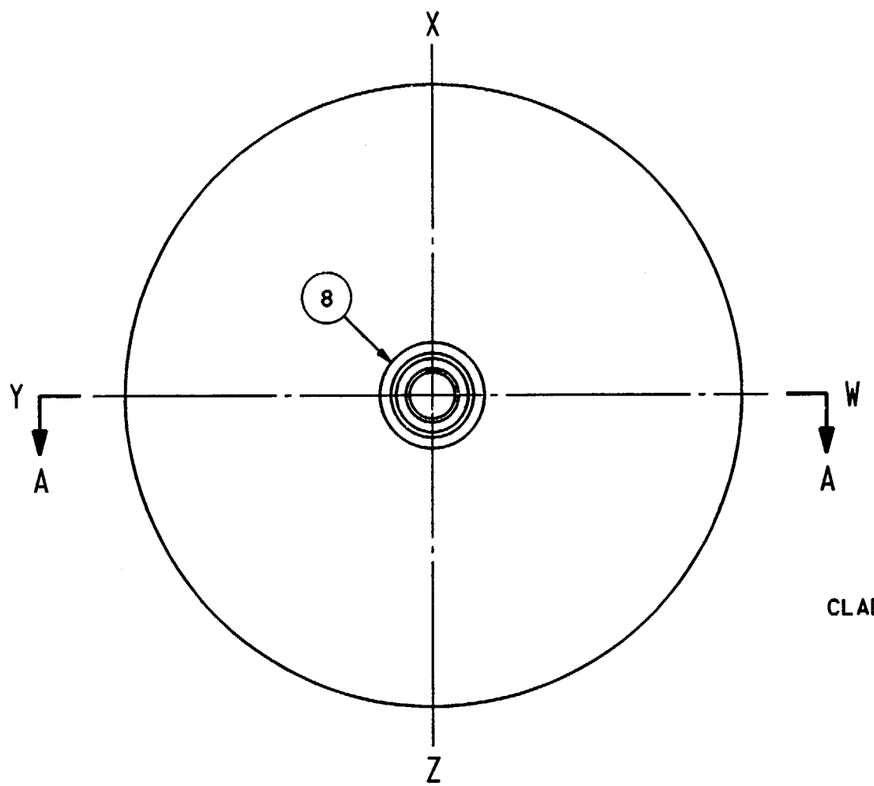

BOTTOM HEAD
PLAN VIEW

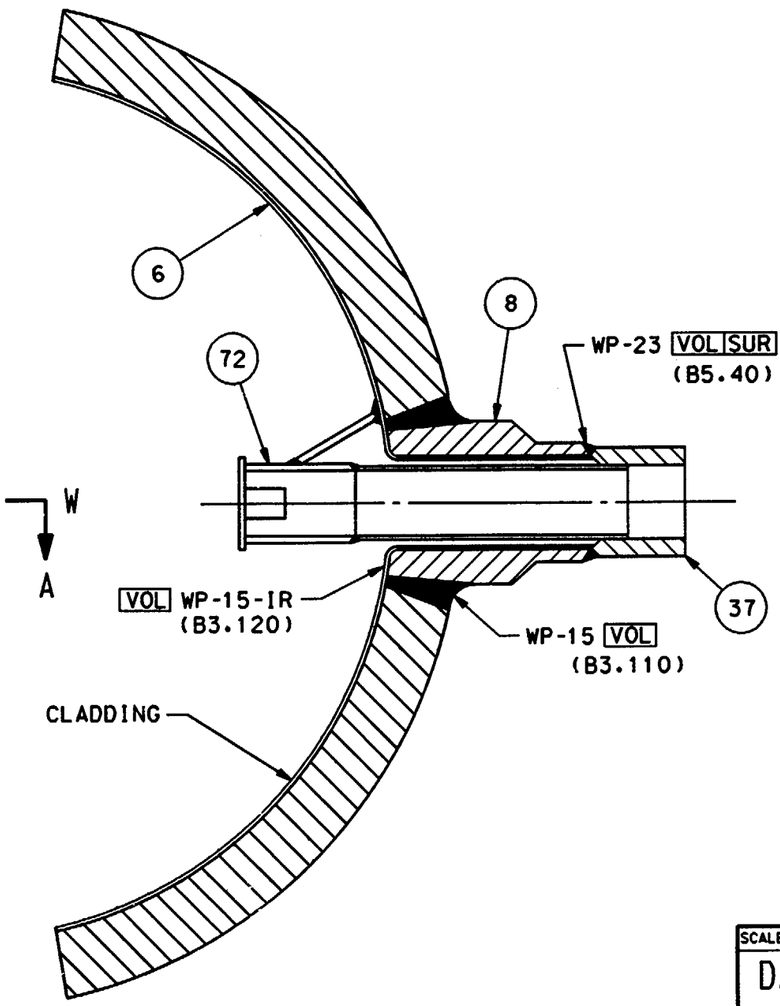

SECTION A-A

LEGEND:

VOL - VOLUMETRIC EXAMINATION
SUR - SURFACE EXAMINATION

NOTES:

1. THE WELD IDENTIFICATION NUMBERS ARE PRECEEDED BY "RC-PZR-"

REFERENCE DRAWINGS:

B&W 154595E LOWER HEAD ASSEMBLY AND DETAILS (TED# 7749-M-507-26)
B&W 154600E SURGE NOZZLE DETAILS (TED# 7749-M-507-31)

SCALE N.T.S.	DESIGNED	DRAWN WME	DATE 5-3-89

DAVIS-BESSE NUCLEAR POWER STATION
UNIT NO. 1
THE TOLEDO EDISON COMPANY

Q

PRESSURIZER LOWER HEAD
NOZZLE DETAILS
CONTAINMENT BUILDING

DRAWING NO.	REV.
ISI-SK-022	1

DFN=QS1:[55,7]ISISK022.DGN

REV.	DATE	DESCRIPTION	BY	CHK	ENGR	ENGR SUPV	ENG MGR
1	9-20-90	ISSUED FOR SECOND 10 YEAR INSERVICE INSPECTION INTERVAL	WME				

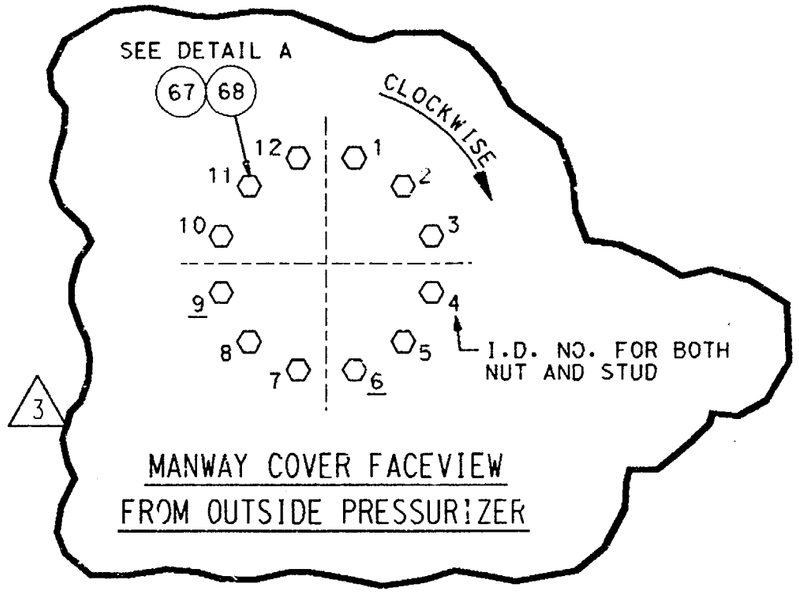

MANWAY COVER FACEVIEW
FROM OUTSIDE PRESSURIZER

MARK#	DESCRIPTION	MATERIAL
4	HEATER BELT SHELL	SA516 GR.70
5	UPPER HEAD	SA516 GR.70
12	COVER PLATE (3)	SA533 GR.B
13	DIAPHRAM (3)	SA240 TP304
67	2 3/4" DIA. 8UN-2A MANWAY STUD (12)	SA320 L43
68	2 3/4" DIA. 8UN-2B MANWAY NUT (12)	SA320 L43
69	MANWAY COVER	SA516 GR.70
70	MANWAY GASKET	——
71	MANWAY INSERT	SA240 TP304
75	2" DIA. 8UN-2A HEATER BUNDLE STUD (48)	SA320 L43
76	2" DIA. 8UN-2B HEATER BUNDLE NUT (48)	SA320 L43
122	MANWAY FORGING	A508 CL1

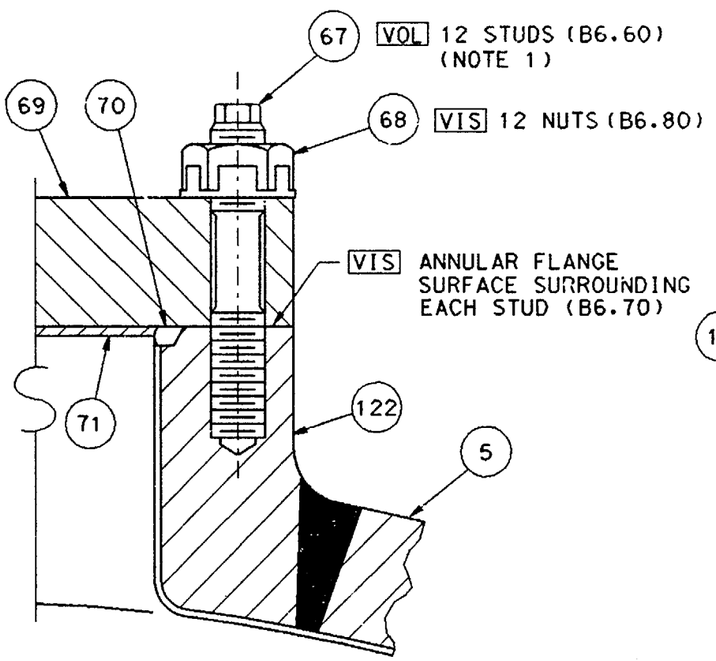

MANWAY COVER ASSEMBLY
DETAIL A

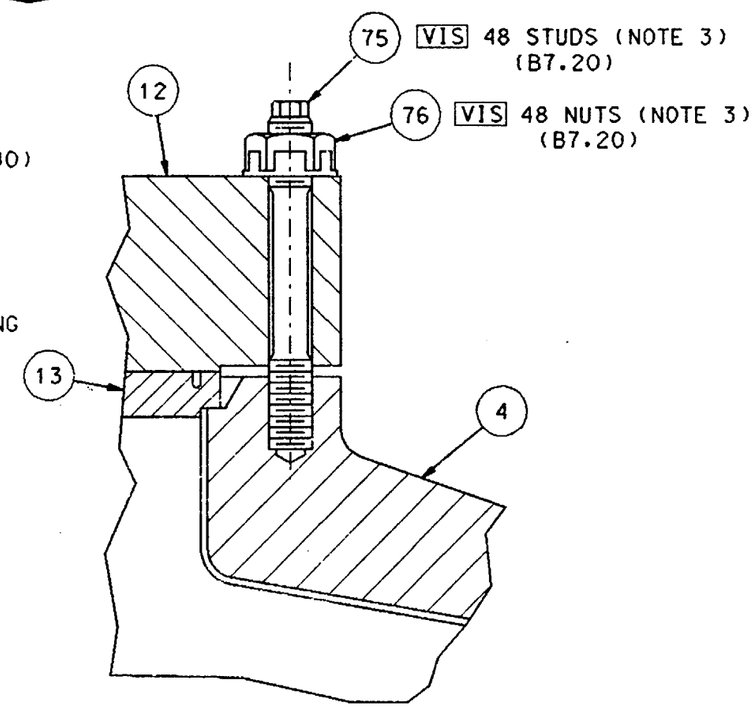

HEATER BUNDLE COVER ASSEMBLY
DETAIL B

FOR TOP,(2) MIDDLE(1) & BOTTOM(3) COVER PLATE
FOR HEATER BUNDLES (MK-A28-214-1,2 OR 3)

LEGEND:

VOL - VOLUMETRIC EXAMINATION
VIS - VISUAL (VT-1) EXAMINATION

NOTES:

1. THE EXAMINATION IDENTIFICATION NUMBER FOR EACH MANWAY STUD CONSISTS OF THE STUD SERIAL NUMBER PRECEEDED BY "RC-PZR-STUD".
2. THE EXAMINATION IDENTIFICATION NUMBER FOR ALL VISUAL EXAMINATIONS CONSISTS OF THE MARK NUMBER PRECEEDED BY "RC-PZR".
3. THERE ARE 16 STUDS AND NUTS IN EACH OF THE 3 HEATER BUNDLE COVER ASSEMBLIES (48 STUDS AND NUTS TOTAL). REFER TO DRAWING ISI-SK-020 FOR THE IDENTIFICATION OF THE HEATER BUNDLE COVER ASSEMBLIES.

REFERENCE DRAWINGS:

B&W 154588E HEATER BUNDLE ASSEMBLY AND DETAILS (TED# 7749-M-507-8)
B&W 154606E MISC. CLOSURE DETAILS (TED# 7749-M-507-28)
B&W 27115F PRESSURIZER GENERAL ARRANGEMENT

SCALE N.T.S.	DESIGNED	DRAWN WME	DATE 5-3-89

DAVIS-BESSE NUCLEAR POWER STATION
UNIT NO. 1
THE TOLEDO EDISON COMPANY

Q

PRESSURIZER BOLTING DETAILS
CONTAINMENT BUILDING

DRAWING NO.	REV.
ISI-SK-023	3

DB DATE: 09-24-93 DFN=/USR3/ISI/ISISK023.DGN

REV.	DATE	DESCRIPTION	BY	CHK	ENGR	ENGR SUPV	ENG MGR
3	[illegible]	INC. DCN ISI-SK-023-2 FOR FPR 91-0095-901	JFS	SBW	INITIALS ON FILE		
2	9-30-92	INC. DCN ISI-SK-023-1 FOR DCR 91-0011			INITIALS ON FILE		
1	9-20-90	ISSUED FOR SECOND 10 YEAR INSERVICE INSPECTION INTERVAL					

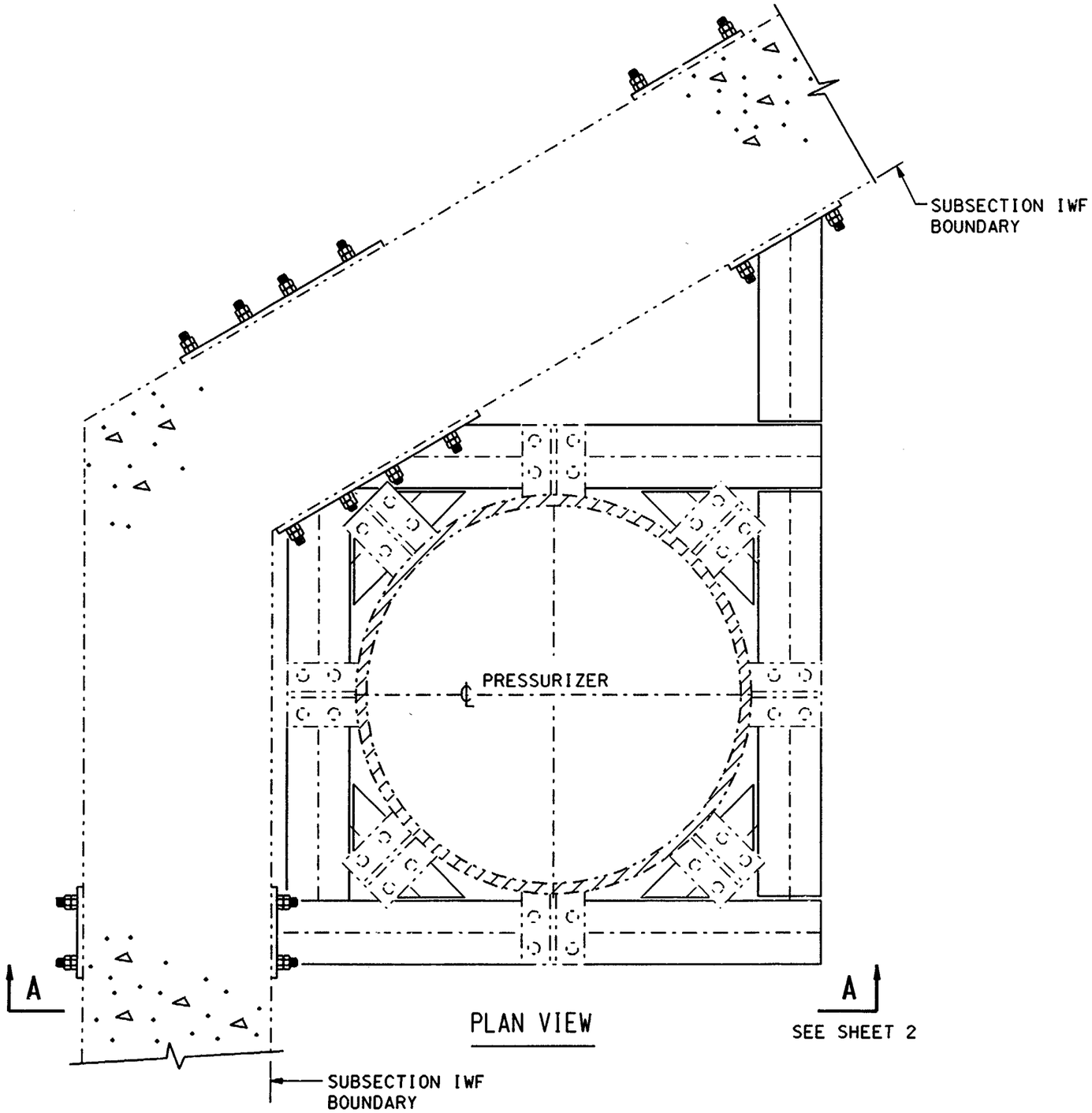

PLAN VIEW

SEE SHEET 2

NOTES:

1. A VT3 EXAMINATION SHALL BE PERFORMED ON THE PRESSURIZER SUPPORT. THE ASME SECTION XI ITEM NUMBER IS F1.40. (2)
2. THE EIGHT SUPPORT ATTACHMENT WELDS (ASME SECTION XI ITEM NUMBER B10.10) ARE SHOWN ON DRAWING ISI-SK-020. (2)

REFERENCE DRAWINGS:

C-184 CONTAINMENT INTERNAL STRUCTURES PRESSURIZER STEEL SUPPORTS

REV.	DATE	DESCRIPTION
2	8-21-00	INC DCN ISI-SK-024-2 PER DDR 00-1766
1	9/24/92	INC DCN ISI-SK-024-1 FOR DCR 91-0011
0	9/12/89	ISSUED FOR SECOND 10 YEAR INSERVICE INSPECTION INTERVAL

JOR	SBW	"INITIALS ON FILE"	—
BY	CHK	ENGR	ENGR SUPV.	ENG MGR

SCALE N.T.S.	DESIGNED	DRAWN CB	DATE 5-3-89

DAVIS-BESSE NUCLEAR POWER STATION
UNIT NO. 1
THE TOLEDO EDISON COMPANY

PRESSURIZER SUPPORTS
CONTAINMENT BUILDING

DRAWING NO.	REV.
ISI-SK-024 SHEET 1	2

DB:07-31-00 DFN= J:/ISI/ISI24SH1.DGN

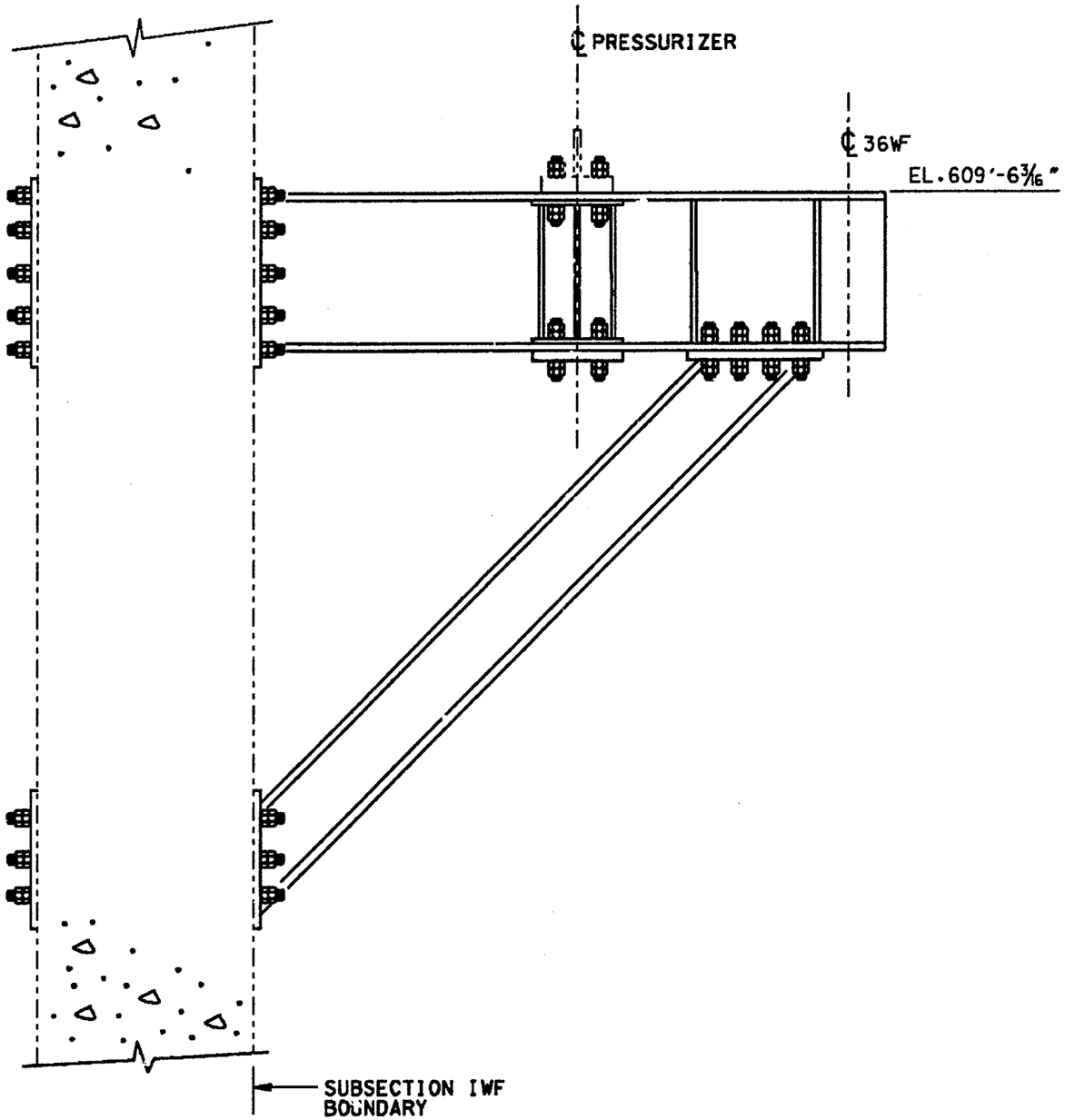

SECTION A-A

NOTES:

1. FOR EXAMINATION REQUIREMENTS, NOTES AND REFERENCES, SEE SHEET 1 OF THIS DRAWING.

REV.	DATE	DESCRIPTION	BY	CHK	ENGR	ENGR SUPV	ENG MGR
0	9/12/89	ISSUED FOR SECOND 10 YEAR INSERVICE INSPECTION INTERVAL	CB	AJC	RRB	LLC/LEVC	EEC

SCALE N.T.S.	DESIGNED	DRAWN CB	DATE 5-3-89

DAVIS-BESSE NUCLEAR POWER STATION
UNIT NO. 1
THE TOLEDO EDISON COMPANY

Q

PRESSURIZER SUPPORTS
CONTAINMENT BUILDING

DRAWING NO.	REV.
ISI-SK-024 SHEET 2 OF 2	0

DFN=QS1:[55,7]ISI24SH2.DGN

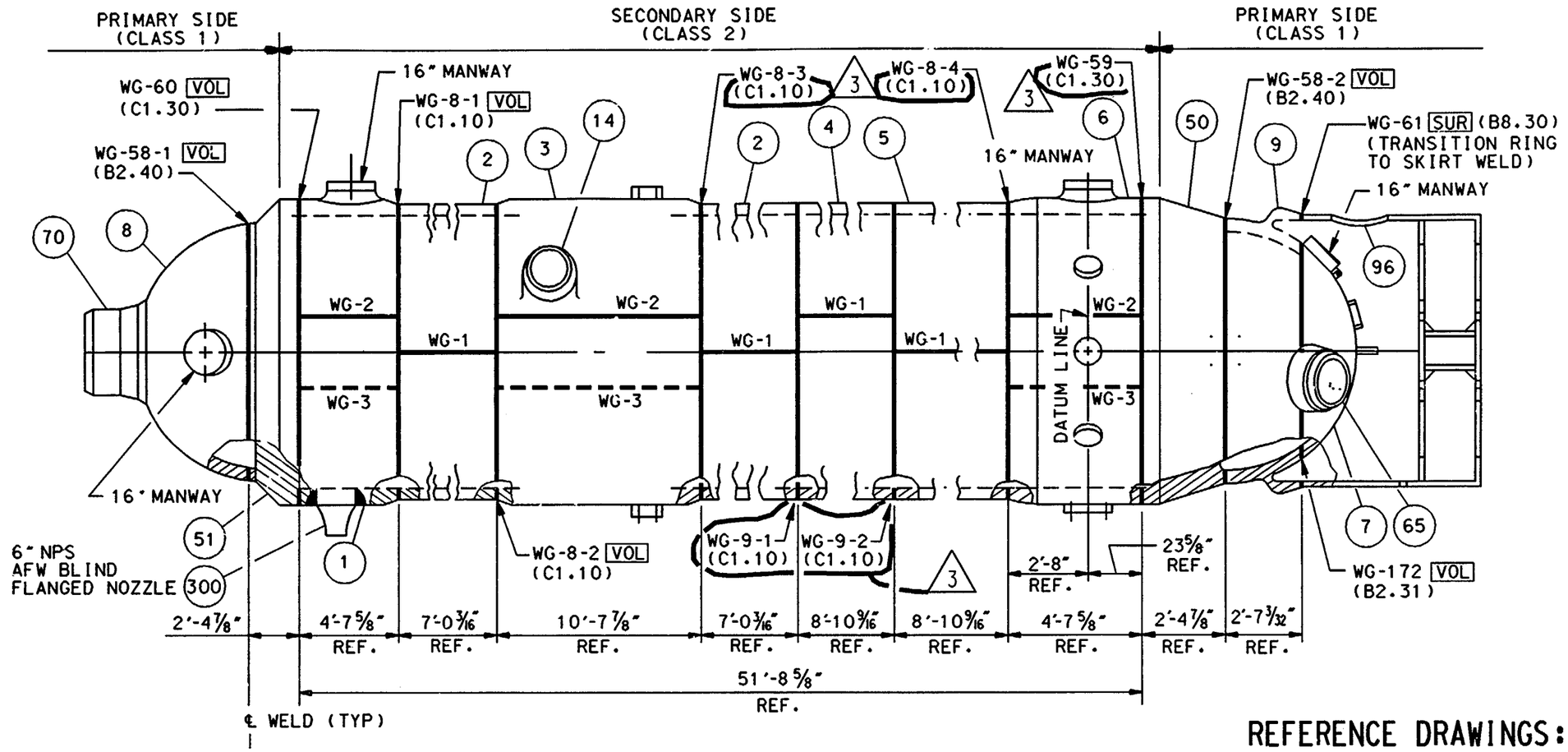

REFERENCE DRAWINGS:

B&W 151906E RADIOGRAPHIC OUTLINE AND TECHNIQUE (TED #7749-M-506-91)

B&W 151912E SHELL AND TUBE SHEET ATTACHMENT ASSEMBLY (TED #7749-M-506-88)

B&W 151917E ASSEMBLY AND DETAIL OF LOWER HEAD (TED #7749-M-506-89)

B&W 151907E DET. OF TUBE SHEET (UPPER)

B&W 83255A LIST OF DRAWINGS

MARK #	DESCRIPTION	MATERIAL
1-6	SHELL SECTIONS	SA516 GR.70
7	LOWER HEAD	SA533 GR.B CL1
8	UPPER HEAD	SA533 GR.B CL1
9	TRANSITION RING	A508-67-CL2
14	24 IN. STEAM OUTLET NOZZLE (2)	A508-67-CL2
50	LOWER TUBE SHEET	A508-67-CL2
51	UPPER TUBE SHEET	A508-67-CL2
65	28 IN. PRIMARY OUTLET NOZZLE (2)	A508-67-CL2
70	36 IN. PRIMARY INLET NOZZLE	A508-67-CL2
96	SUPPORT SKIRT	SA533 GR.B CL1
84	GENERATOR TUBES (15,457)	SB-163
300	AUXILIARY FEEDWATER NOZZLE	A508-CL1

LEGEND

VOL - VOLUMETRIC EXAMINATION

SUR - SURFACE EXAMINATION

NOTES

1. THE WELD NUMBERS ON THE CLASS 1 PRIMARY SIDE ARE PRECEEDED BY "RC-SG-1- ".
2. THE WELD NUMBERS ON THE CLASS 2 SECONDARY SIDE ARE PRECEEDED BY "SP-SG-1- ".

SCALE N.T.S.	DESIGNED	DRAWN CB	DATE 5-3-89

DAVIS-BESSE NUCLEAR POWER STATION
UNIT NO. 1
THE TOLEDO EDISON COMPANY

0

STEAM GENERATOR 1-1
SHELL AND HEAD WELDS
CONTAINMENT BUILDING

DRAWING NO.	REV.
ISI-SK-030	3

DB DATE: 07-31-00 DFN=J:/ISI/ISISK030.DGN

REV.	DATE	DESCRIPTION
3	8-21-00	INC. DCN ISI-SK-030-3 PER DDR 00-1766
2	9-24-92	INC. DCN'S ISI-SK-030-1 & 2 FOR DCR 91-0011
1	9-20-90	ISSUED FOR SECOND 10 YEAR INSERVICE INSPECTION INTERVAL

JOR — "INITIALS ON FILE" — ENG MGR
SBW — "INITIALS ON FILE" — ENGR SUPV
CHK — ENGR
BY

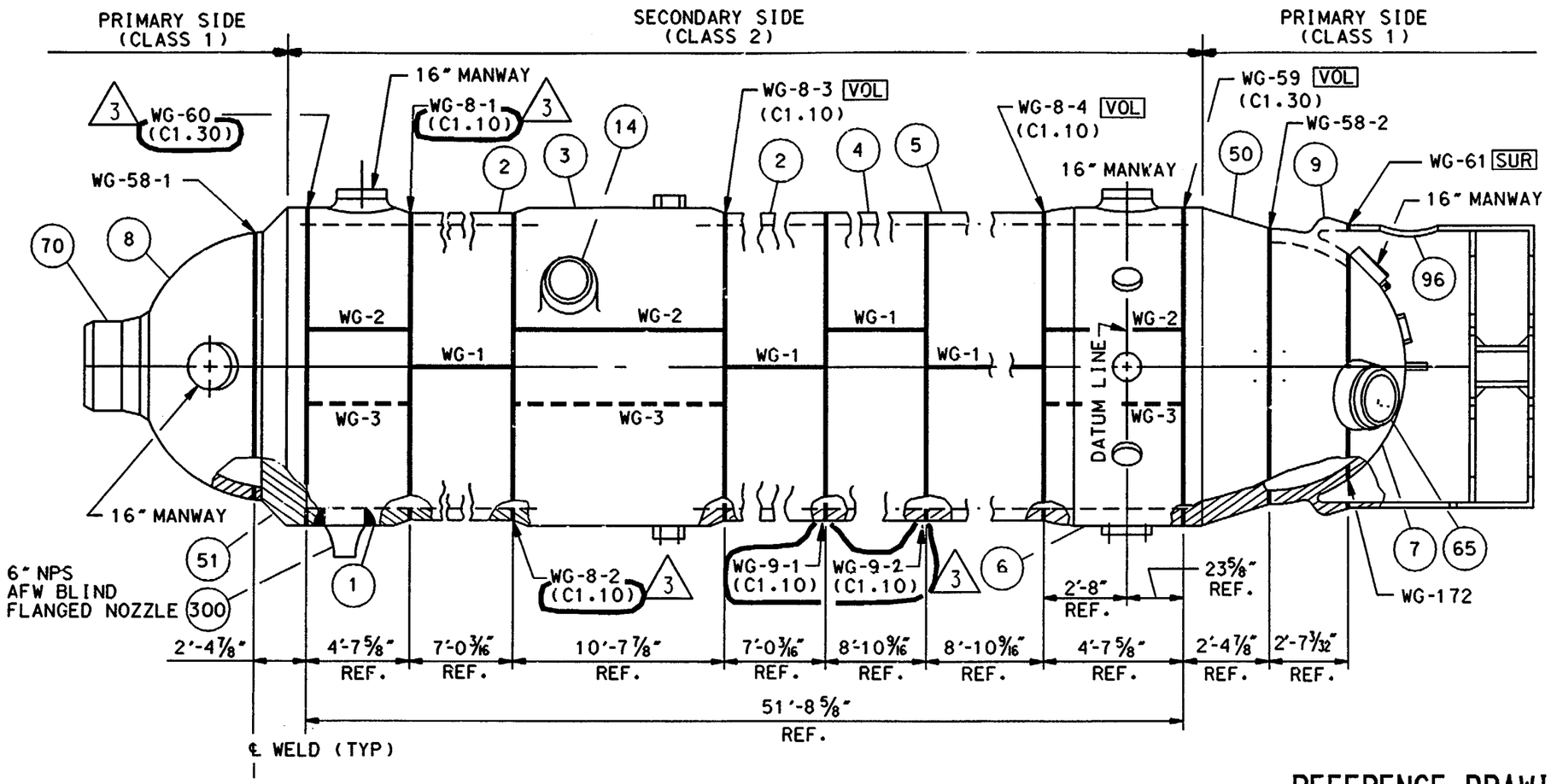

MARK #	DESCRIPTION	MATERIAL
1-6	SHELL SECTIONS	SA516 GR.70
7	LOWER HEAD	SA533 GR.B CL1
8	UPPER HEAD	SA533 GR.B CL1
9	TRANSITION RING	A508-67-CL2
14	24 IN. STEAM OUTLET NOZZLE (2)	A508-67-CL2
50	LOWER TUBE SHEET	A508-67-CL2
51	UPPER TUBE SHEET	A508-67-CL2
65	28 IN. PRIMARY OUTLET NOZZLE (2)	A508-67-CL2
70	36 IN. PRIMARY INLET NOZZLE	A508-67-CL2
96	SUPPORT SKIRT	SA533 GR.B CL1
84	GENERATOR TUBES (15,487)	SB-163
300	AUXILIARY FEEDWATER NOZZLE	A508-CL1

LEGEND

VOL - VOLUMETRIC EXAMINATION

SUR - SURFACE EXAMINATION

NOTES

1. THE WELD NUMBERS ON THE CLASS 1 PRIMARY SIDE ARE PRECEEDED BY "RC-SG-2- ".
2. THE WELD NUMBERS ON THE CLASS 2 SECONDARY SIDE ARE PRECEEDED BY "SP-SG-2- ".

REFERENCE DRAWINGS:

B&W 151906E RADIOGRAPHIC OUTLINE AND TECHNIQUE (TED #7749-M-506-91)

B&W 151912E SHELL AND TUBE SHEET ATTACHMENT ASSEMBLY (TED #7749-M-506-88)

B&W 151917E ASSEMBLY AND DETAIL OF LOWER HEAD (TED #7749-M-506-89)

REV.	DATE	DESCRIPTION
3	8-27-00	INC. DCN ISI-SK-031-3 PER DDR 00-1766
2	9-24-92	INC. DCN'S ISI-SK-031-1 & 2 FOR DCR 91-0011
1	9-20-90	ISSUED FOR SECOND 10 YEAR INSERVICE INSPECTION INTERVAL

JOR — BY; "INITIALS ON FILE" — CHK; "INITIALS ON FILE" — ENGR; ENGR SUPV; ENG MGR

SCALE N.T.S. | DESIGNED | DRAWN CB | DATE 5-3-89

DAVIS-BESSE NUCLEAR POWER STATION
UNIT NO. 1
THE TOLEDO EDISON COMPANY

Q

STEAM GENERATOR 1-2
SHELL AND HEAD WELDS
CONTAINMENT BUILDING

DRAWING NO. ISI-SK-031 | REV. 3

DB DATE: 07-31-00 DFN=J:/ISI/ISISK031.DGN

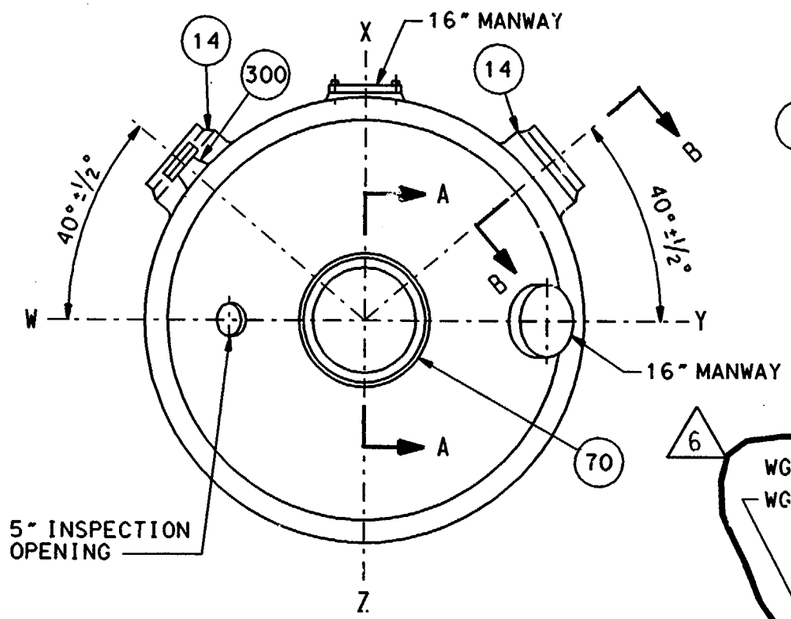

TOP VIEW
W-AXIS FACES SOUTH 6

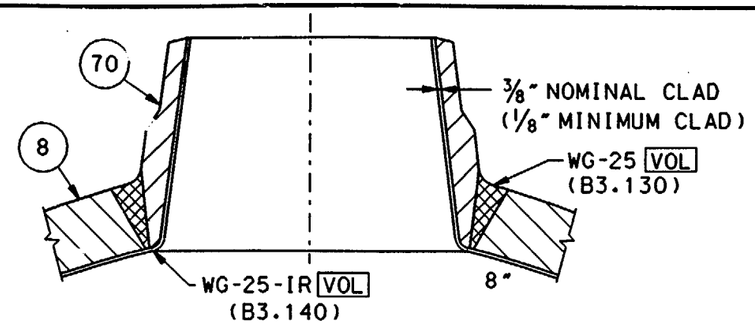

SECTION A-A
PRIMARY INLET NOZZLE

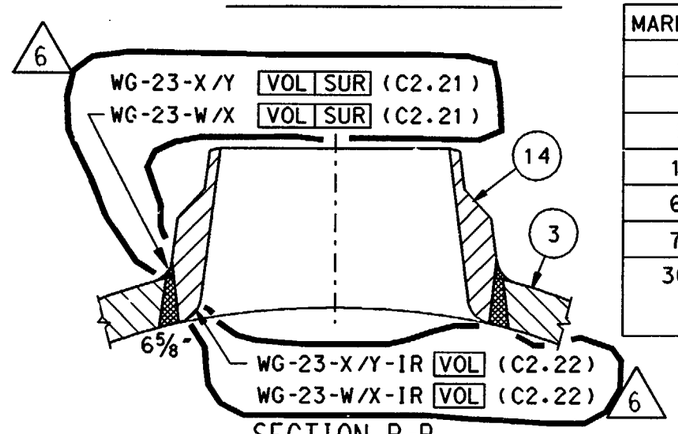

SECTION B-B
SECONDARY STEAM OUTLET NOZZLE
(TYP.2 NOZZLES)

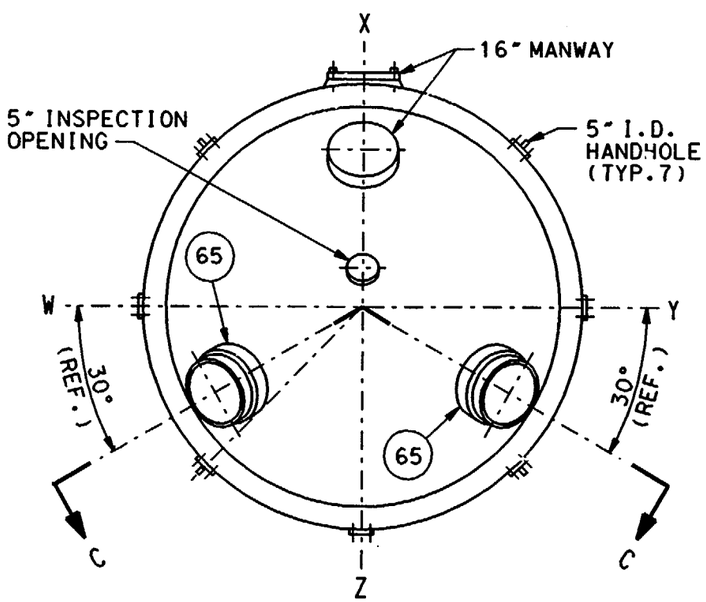

BOTTOM VIEW
6 (WITH SKIRT OMITTED)
W-AXIS FACES SOUTH

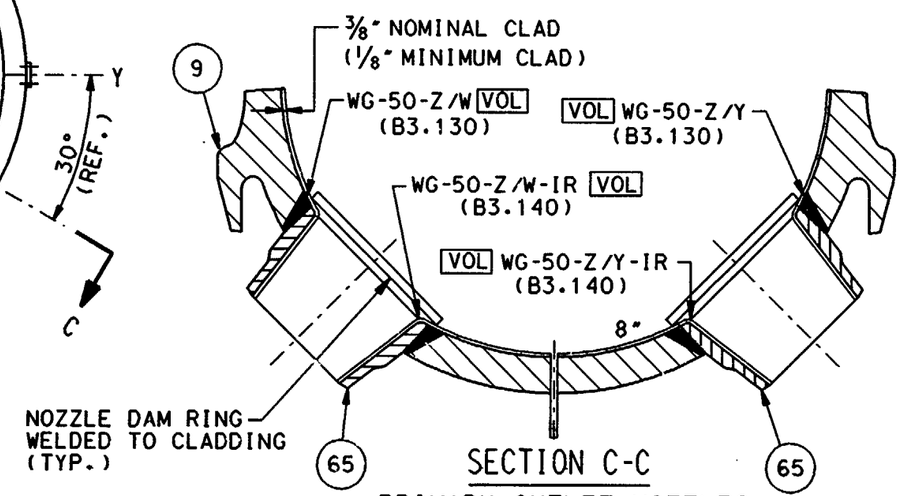

SECTION C-C
PRIMARY OUTLET NOZZLES

LEGEND:

VOL - VOLUMETRIC EXAMINATION
SUR - SURFACE EXAMINATION

NOTES:

1. THE WELD NUMBERS ON THE CLASS 1 PRIMARY SIDE ARE PRECEEDED BY "RC-SG-1-" AND THE WELD NUMBERS ON THE SECONDARY SIDE ARE PRECEEDED BY "SP-SG-1-"
2. A 6 IN. 600# BLIND FLANGE AND 6 IN.600# WELD NECK FLANGE ARE INSTALLED ON THE MK 300 AUXILIARY FEEDWATER NOZZLE.

MARK NO.	DESCRIPTION	MATERIAL
3	SHELL SECTION	SA516 GR.70
7	LOWER HEAD	SA533 GR.B CL1
9	TRANSITION RING	A508-67 CL2
14	24 IN. DIA. STEAM OUTLET NOZZLE (2)	A508-67 CL2
65	28 IN. DIA. PRIMARY OUTLET NOZZLE (2)	A508-67 CL2
70	36 IN. DIA. PRIMARY INLET NOZZLE	A508-67 CL1
300	6 IN. DIA. AUX. FEEDWATER NOZZLE (WITH 6 IN. WELD NECK FLANGE AND 6 IN. BLIND FLANGE)	SA508 CL1

REFERENCE DRAWINGS:

B&W 109519D DETAILS AND SUB-ASSEMBLY OF 24 IN. STEAM OUTLET NOZZLES

B&W 1148506E LONGITUDINAL SECTION THRU STEAM GENERATOR WITH FIELD MODIFICATIONS (TED #7749-M-506-85)

B&W 1148507E GENERAL OUTLINE OF STEAM GENERATOR WITH FIELD MODIFICATIONS (TED #7749-M-506-83)

B&W 151912E SHELL AND TUBE SHEET ATTACHMENT ASSEMBLY (TED# 7749-M-506-88)

B&W 151916E ASSEMBLY AND DETAIL OF UPPER HEAD (TED# 7749-M-506-90)

B&W 151917E ASSEMBLY AND DETAIL OF LOWER HEAD (TED# 7749-M-506-89)

SCALE N.T.S.	DESIGNED	DRAWN WME	DATE 5-3-89

DAVIS-BESSE NUCLEAR POWER STATION
UNIT NO. 1
THE TOLEDO EDISON COMPANY

STEAM GENERATOR 1-1
NOZZLE WELDS
CONTAINMENT BUILDING

DRAWING NO.	REV.
ISI-SK-032	6

DB DATE: 08-01-00 DFN=J:/ISI/ISISK032.DGN

REV.	DATE	DESCRIPTION
5	3-8-99	INC. DCN ISI-SK-032-4 PER DDR 98-0591
6	8-21-00	INC. DCN ISI-SK-032-5 PER DDR 00-1766
1	9-20-90	ISSUED FOR SECOND 10 YEAR INSERVICE INSPECTION INTERVAL

BY	CHK	ENGR	ENGR SUPV	ENG MGR
JOR	JBG/JJS	TWB	MDS	ECC
WME				

"INITIALS ON FILE"

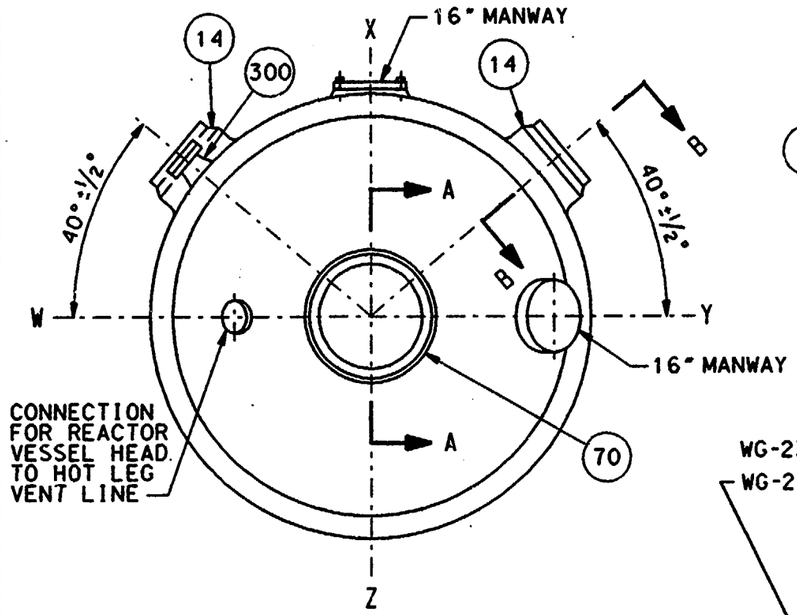

TOP VIEW

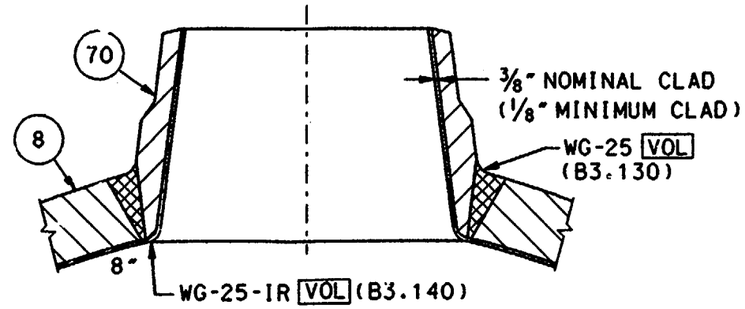

SECTION A-A

PRIMARY INLET NOZZLE

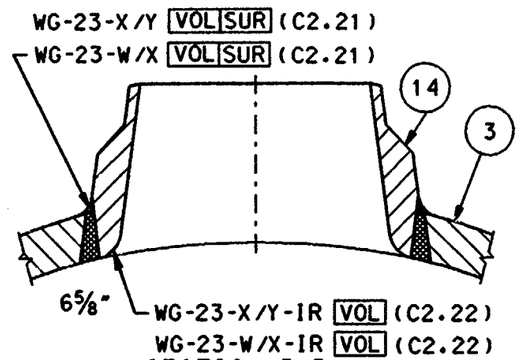

SECTION B-B

SECONDARY STEAM OUTLET NOZZLE

(TYP.2 NOZZLES)

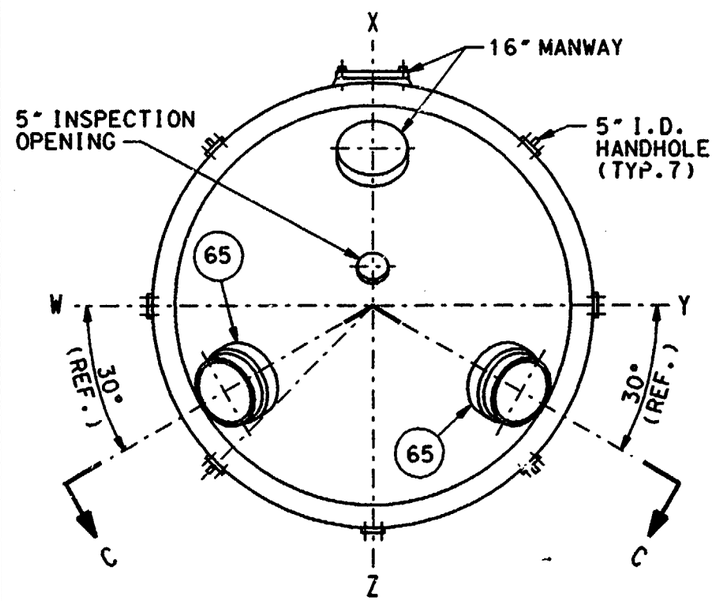

BOTTOM VIEW

(WITH SKIRT OMITTED)

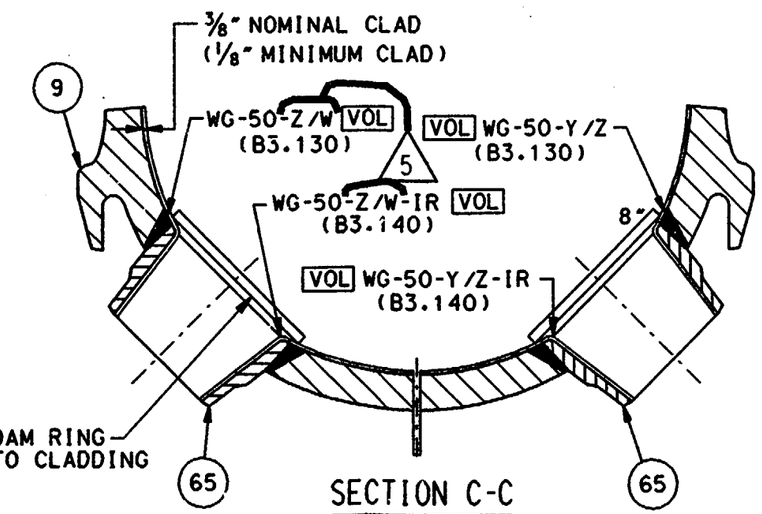

SECTION C-C

PRIMARY OUTLET NOZZLES

LEGEND:

VOL - VOLUMETRIC EXAMINATION

SUR - SURFACE EXAMINATION

NOTES:

1. THE WELD NUMBERS ON THE CLASS 1 PRIMARY SIDE ARE PRECEEDED BY "RC-SG-2-" AND THE WELD NUMBERS ON THE SECONDARY SIDE ARE PRECEEDED BY "SP-SG-2-"
2. A 6 IN. 600# BLIND FLANGE AND 6 IN.600# WELD NECK FLANGE ARE INSTALLED ON THE MK 300 AUXILIARY FEEDWATER NOZZLE.

MARK NO.	DESCRIPTION	MATERIAL
3	SHELL SECTION	SA516 GR.70
7	LOWER HEAD	SA533 GR.B CL1
9	TRANSITION RING	A508-67 CL2
14	24 IN. DIA. STEAM OUTLET NOZZLE (2)	A508-67 CL2
65	28 IN. DIA. PRIMARY OUTLET NOZZLE (2)	A508-67 CL2
70	36 IN. DIA. PRIMARY INLET NOZZLE	A508-67 CL1
300	6 IN. DIA. AUX. FEEDWATER NOZZLE (WITH 6 IN. WELD NECK FLANGE AND 6 IN. BLIND FLANGE)	SA508 CL1

REFERENCE DRAWINGS:

B&W 109519D DETAILS AND SUB-ASSEMBLY OF 24 IN. STEAM OUTLET NOZZLES

B&W 1148506E LONGITUDINAL SECTION THRU STEAM GENERATOR WITH FIELD MODIFICATIONS (TED #7749-M-506-85)

B&W 1148507E GENERAL OUTLINE OF STEAM GENERATOR WITH FIELD MODIFICATIONS (TED #7749-M-506-83)

B&W 151912E SHELL AND TUBE SHEET ATTACHMENT ASSEMBLY (TED# 7749-M-506-88)

B&W 151916E ASSEMBLY AND DETAIL OF UPPER HEAD (TED# 7749-M-506-90)

B&W 151917E ASSEMBLY AND DETAIL OF LOWER HEAD (TED# 7749-M-506-89)

SCALE N.T.S.	DESIGNED	DRAWN WME	DATE 5-3-89

DAVIS-BESSE NUCLEAR POWER STATION
UNIT NO. 1
THE TOLEDO EDISON COMPANY

0

STEAM GENERATOR 1-2
NOZZLE WELDS
CONTAINMENT BUILDING

DRAWING NO.	REV.
ISI-SK-033	5

DB DATE: 10-13-98 DFN=J:/ISI/ISISK033.DGN

REV.	DATE	DESCRIPTION
5	3-8-99	INC. DCN ISI-SK-033-4 PER DDR 98-0591
4	06-23-94	INC. DCN ISI-SK-033-3 FOR RFA 94-0108
1	9-20-90	ISSUED FOR SECOND 10 YEAR INSERVICE INSPECTION INTERVAL

JOR	SBW	MMD	—
WME	JBG/JJS	MDS	ECC
BY	CHK	ENGR	ENGR SUPV	ENG MGR

"INITIALS ON FILE"

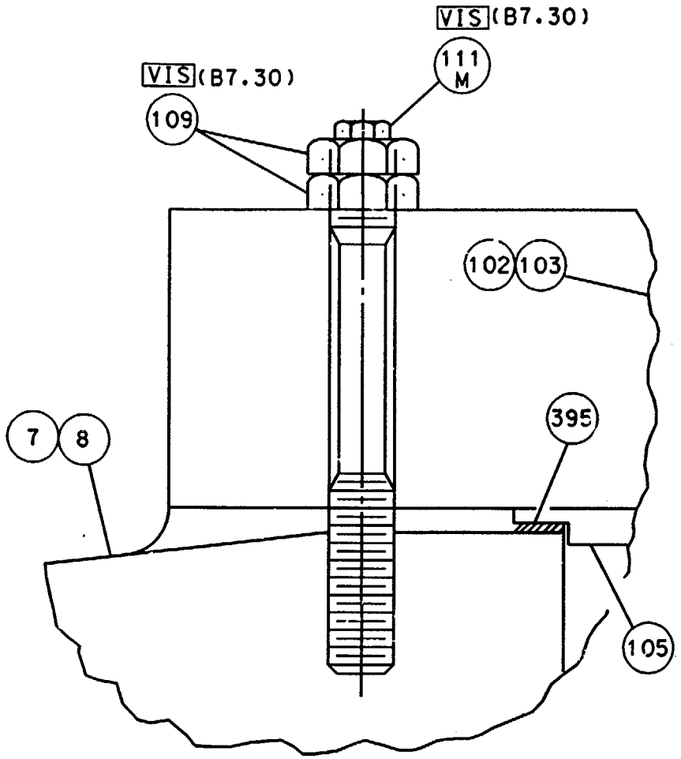

PRIMARY MANWAY ASSEMBLY
DETAIL A

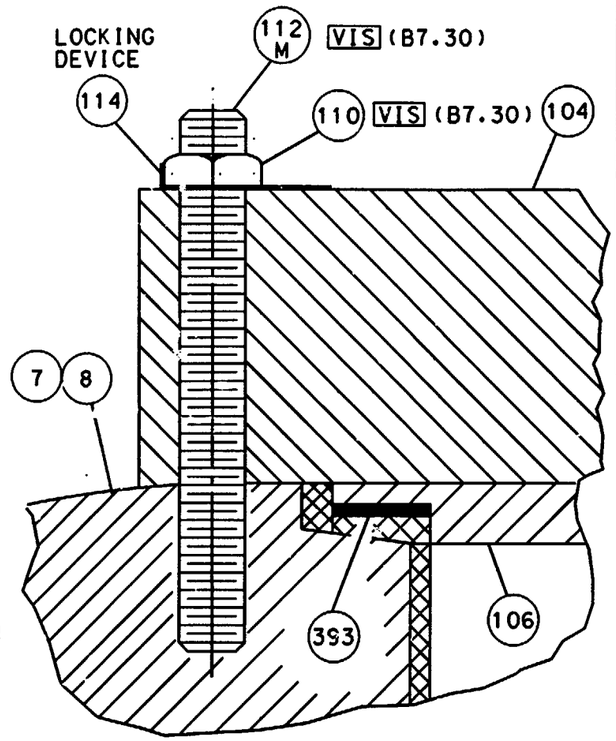

PRIMARY INSPECTION OPENING ASSEMBLY
DETAIL B

MARK #	DESCRIPTION	MATERIAL
7	LOWER HEAD	SA533 GRB CL1
8	UPPER HEAD	SA533 GRB CL1
102/103	PRIMARY MANWAY COVER	SA516 GR70
104	PRIMARY INSPECTION OPENING COVER	SA516 GR70
105	PRIMARY MANWAY BACKING PLATE	SA240 TP304
106	PRIMARY INSPECTION OPENING BACKING PLATE	SA240 TP304
109	2 IN. HVY. HEX. NUT FOR MANWAY	SA194 GR7
110	1 IN. HVY. HEX. NUT FOR INSPECTION OPENING	SA194 GR7
111M	2 IN. STUD FOR MANWAY	SA320
112M	1 IN. STUD FOR INSPECTION OPENING	SA320
393/395	FLEXITALLIC GASKET	N/A

LEGEND

VIS - VISUAL (VT-1) EXAMINATION

NOTES

1. THE EXAMINATION IDENTIFICATION NUMBER IS PRECEEDED BY "RC- ".
2. THE STUDS AND NUTS FOR THE CONNECTION BETWEEN THE REACTOR VESSEL HEAD TO HOT LEG VENT LINE AND THE UPPER INSPECTION OPENING OF STEAM GENERATOR 1-2 ARE EXAMINED UNDER ASME SECTION XI EXAMINATION CATEGORY B-G-2, ITEM NO. B7.50.
3. THERE ARE NO BOLTS, STUDS OR NUTS IN THE CLASS 2 SECONDARY SIDE OF THE STEAM GENERATORS THAT FALL UNDER ASME SECTION XI EXAMINATION CATEGORY C-D.

REFERENCE DRAWINGS:

B&W 1148509E LIST OF MATERIAL FOR FIELD MOD.

B&W 1148506E LONGITUDINAL SECTION THRU STEAM GENERATORS WITH FIELD MODIFICATIONS (TED #7749-M-506-85)

B&W 1148507E GENERAL OUTLINE OF STEAM GENERATORS WITH FIELD MODIFICATIONS (TED #7749-M-506-83).

B&W 1132175 OTSG PRIMARY MANWAY STUD (TED #7749-M-506-96)

B&W 135464A OTSG PRIMARY INSPECTION OPENING STUD

STEAM GEN. NO.	BOLTED ASSEMBLY	EXAMINATION I.D. NO.	DESCRIPTION	QTY.	ASME SECTION XI EXAMINATION
1-1	UPPER PRIMARY MANWAY	SG-1-MK-111M-1 SG-1-MK-109-1	2 IN. DIA STUD 2 IN. DIA HVY HEX NUT	16 32	VT-1 VT-1
	LOWER PRIMARY MANWAY	SG-1-MK-111M-2 SG-1-MK-109-2	2 IN. DIA STUD 2 IN. DIA HVY HEX NUT	16 32	VT-1 VT-1
	UPPER PRIMARY INSPECTION OPENING	SG-1-MK-112M-1 SG-1-MK-110-1	1 IN. DIA STUD 1 IN. DIA HVY HEX NUT	12 12	VT-1 VT-1
	LOWER PRIMARY INSPECTION OPENING	SG-1-MK-112M-2 SG-1-MK-110-2	1 IN. DIA STUD 1 IN. DIA HVY HEX NUT	12 12	VT-1 VT-1
1-2	UPPER PRIMARY MANWAY	SG-2-MK-111M-1 SG-2-MK-109-1	2 IN. DIA STUD 2 IN. DIA HVY HEX NUT	16 32	VT-1 VT-1
	LOWER PRIMARY MANWAY	SG-2-MK-111M-2 SG-2-MK-109-2	2 IN. DIA STUD 2 IN. DIA HVY HEX NUT	16 32	VT-1 VT-1
	UPPER PRIMARY INSPECTION OPENING	NOTE 2			
	LOWER PRIMARY INSPECTION OPENING	SG-2-MK-112M-2 SG-2-MK-110-2	1 IN. DIA STUD 1 IN. DIA HVY HEX NUT	12 12	VT-1 VT-1

REV.	DATE	DESCRIPTION	BY	CHK	ENGR	ENGR SUPV	ENG MGR
0	9-20-90	ISSUED FOR SECOND 10 YEAR INSERVICE INSPECTION INTERVAL	WME				

SCALE | DESIGNED | DRAWN | DATE

DAVIS-BESSE NUCLEAR POWER STATION
UNIT NO. 1
THE TOLEDO EDISON COMPANY

Q

STEAM GENERATOR 1-1 AND 1-2
BOLTING DETAILS - PRIMARY SIDE
CONTAINMENT BUILDING

DRAWING NO. ISI-SK-034 | REV. 1 0

DFN=QS1:[55,7]ISISK034.DGN

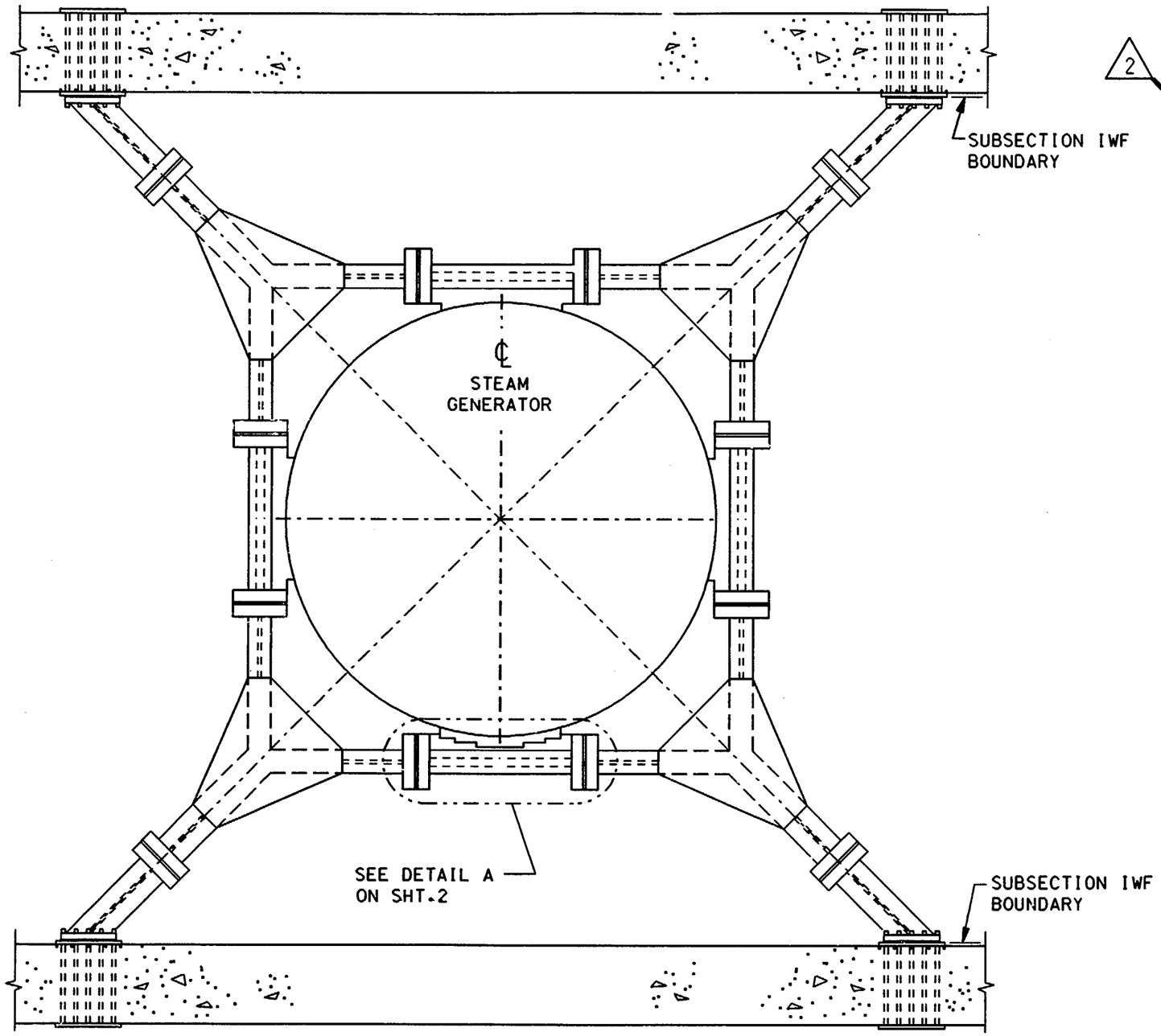

PLAN VIEW
ABOVE EL.630'-0"

NOTES:

1. A VT-3 EXAMINATION SHALL BE PERFORMED ON THE SUPPORTS FOR ONE OF THE TWO STEAM GENERATORS.
2. THE ASME SECTION XI ITEM NUMBER IS F1.40.
3. THE SUPPORT FOR STEAM GENERATOR 1-2 IS THE SAME AS SHOWN, EXCEPT ROTATE 180°.

REFERENCE DRAWINGS:

C-178 STEAM GENERATOR UPPER SUPPORT PLAN AND SECTIONS, SHEET 1.

C-179 STEAM GENERATOR UPPER SUPPORT DETAILS, SHEET 2.

B&W 120100D UPPER LATERAL SUPPORT ERECTION ASSEMBLY (TED #7749-M-506-29).

B&W 120101D UPPER LATERAL SUPPORT ASSEMBLY AND DETAILS (TED #7749-M-506-43).

REV.	DATE	DESCRIPTION
2	8/21/92	INC DCN ISI-SK-035-2 PER DDR 00-1766
1	9/22/92	INC DCN ISI-SK-035-1 FOR DCR 91-0011
0	9/12/89	ISSUED FOR SECOND 10 YEAR INSERVICE INSPECTION INTERVAL

BY	CHK	ENGR	ENGR SUPV	ENG MGR
JOR	SBW	"INITIALS ON FILE"	"INITIALS ON FILE"	MM

SCALE N.T.S.	DESIGNED	DRAWN CB	DATE 5-26-89

DAVIS-BESSE NUCLEAR POWER STATION
UNIT NO. 1
THE TOLEDO EDISON COMPANY

Q

STEAM GENERATORS 1-1 AND 1-2
UPPER LATERAL SUPPORTS

DRAWING NO.	REV.
ISI-SK-035 SHEET 1	2

DB:08-01-00 DFN=J:/ISI/ISI35SH1.DGN

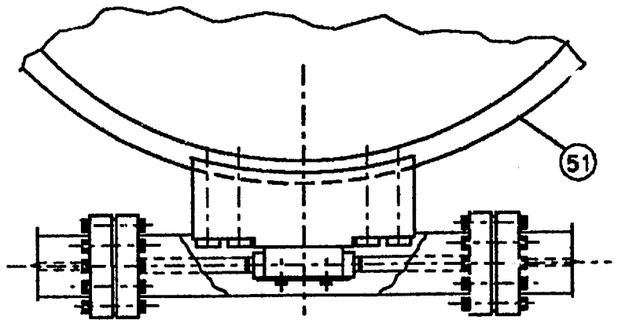

DETAIL A
PLAN VIEW

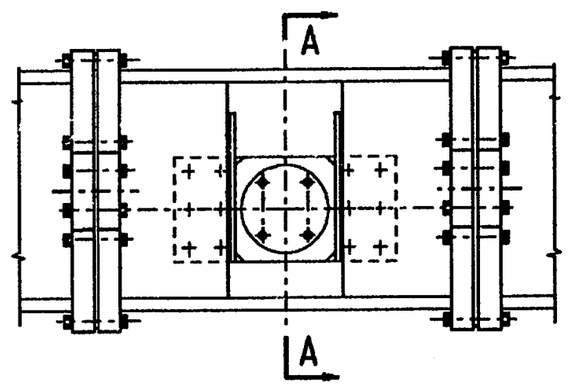

SIDE VIEW

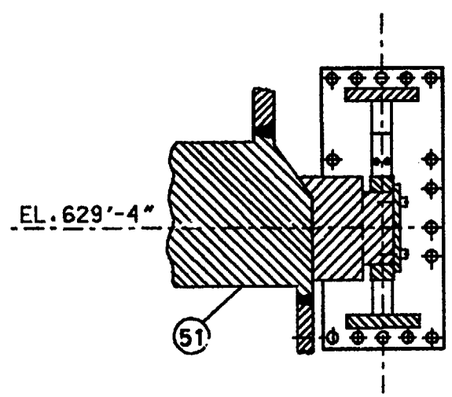

SECTION A-A

NOTES:

1. FOR GENERAL NOTES AND REFERENCES, SEE SHEET 1.

REV.	DATE	DESCRIPTION	BY	CHK	ENGR	ENGR SUPV	ENG MGR
0	9/12/89	ISSUED FOR SECOND 10 YEAR INSERVICE INSPECTION INTERVAL	CB	PJC	DRB	LLC	

SCALE N.T.S.	DESIGNED	DRAWN CB	DATE 5-26-89

DAVIS-BESSE NUCLEAR POWER STATION
UNIT NO. 1
THE TOLEDO EDISON COMPANY

Q

STEAM GENERATORS 1-1 AND 1-2
UPPER LATERAL SUPPORTS

DRAWING NO.	REV.
ISI-SK-035 SHEET 2 OF 2	0

DFN=QS1:[55,7]ISI35SH2.DGN

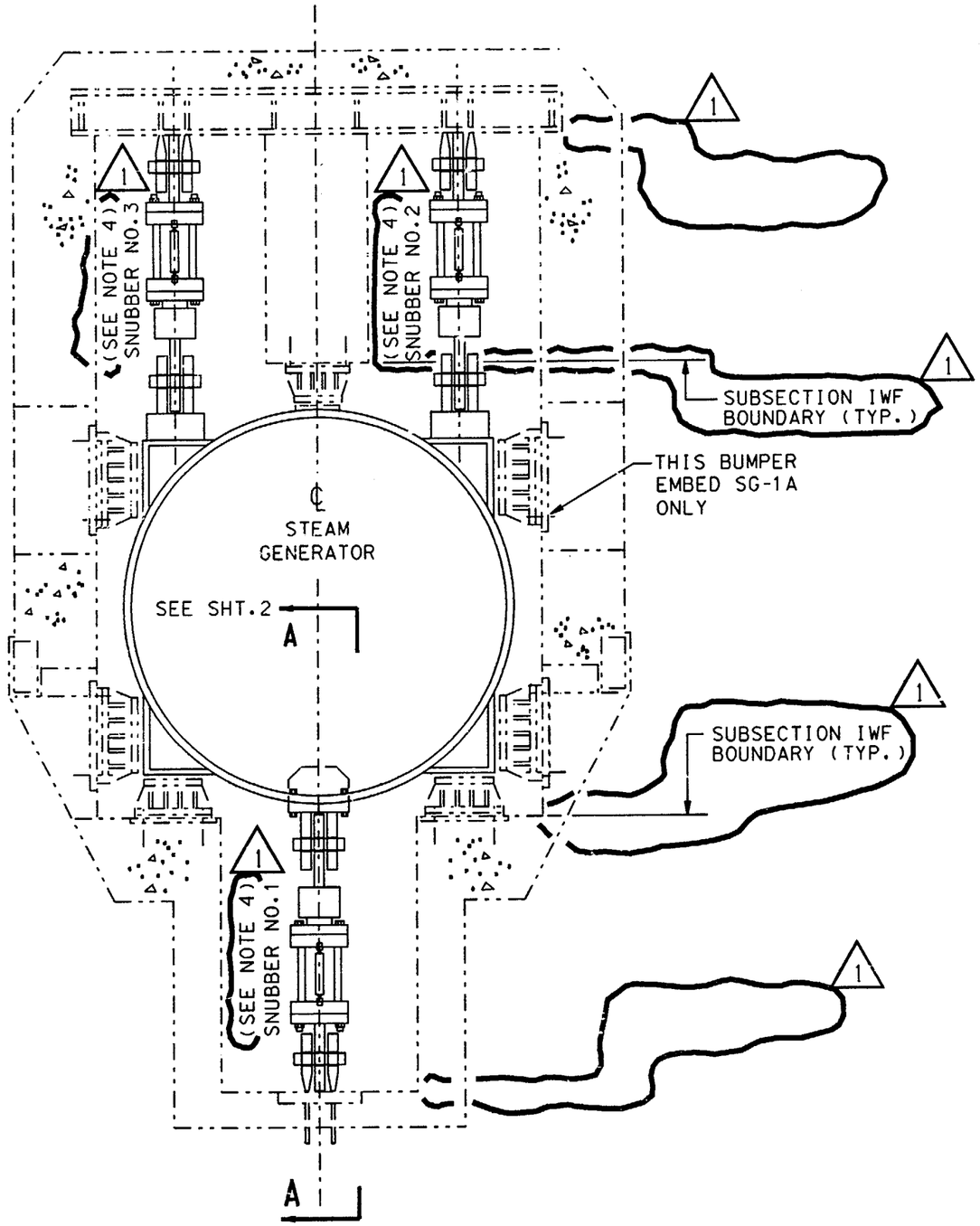

PLAN VIEW
ABOVE EL.565'-10"

NOTES:

1. THE LOWER SUPPORTS FOR EACH STEAM GENERATOR CONSIST OF THE SUPPORT SKIRT, SLIDING SUPPORT, BASE PLATE AND BUMPER ASSEMBLIES.
2. A VT-3 EXAMINATION SHALL BE PERFORMED ON THE SUPPORTS FOR ONE OF THE TWO STEAM GENERATORS. THE EXAMINATION SHALL BE PERFORMED FROM THE INTEGRAL ATTACHMENT WELD (WELD WG-61 ON DRAWING ISI-SK-030) TO THE BOLTED CONNECTION TO THE BUILDING STRUCTURE (SOLE PLATE).
3. THE SUPPORTS FOR STEAM GENERATOR 1-2 ARE THE SAME AS SHOWN, EXCEPT OPPOSITE HAND ON THE WEST SIDE.
4. THE THREE HYDRAULIC SNUBBERS ON EACH STEAM GENERATOR HAVE BEEN DISABLED AND ABANDONED IN PLACE AND THEREFORE ARE NO LONGER PART OF THE S.G. LOWER SUPPORT STRUCTURE. (REF. MOD. 90-0079 SUPP.0

REFERENCE DRAWINGS:

C-167 CONTAINMENT INTERNAL STRUCTURES
STEAM GENERARO FOUNDATIONS, SHEET 3.

B&W 151929E ASSEMBLY AND DETAIL OF
SLIDING SUPPORT (TED# 7749-M-506-26).

B&W 145210E, ASSY.& DETAIL OF LOWER
RESTRAINT (TE#M506-23)

SCALE N.T.S.	DESIGNED	DRAWN CB	DATE 5-26-89

DAVIS-BESSE NUCLEAR POWER STATION
UNIT NO. 1
THE TOLEDO EDISON COMPANY

Q

STEAM GENERATORS 1-1 AND 1-2
LOWER SUPPORTS

DRAWING NO.	REV.
ISI-SK-036 SHEET 1	1

DB 5-14-92

DFN=QS1:[55,7]ISI3SH1.DGN

REV.	DATE	DESCRIPTION	BY	CHK	ENGR	ENGR SUPV	ENG MGR
1	6/30/92	INC. DCN ISI-SK-036-1 FOR MOD. 90-0079 SUPP. 0	JAD				
0	9-12-89	ISSUED FOR SECOND 1C YEAR INSERVICE INSPECTION INTERVAL			"INITIALS ON FILE"		

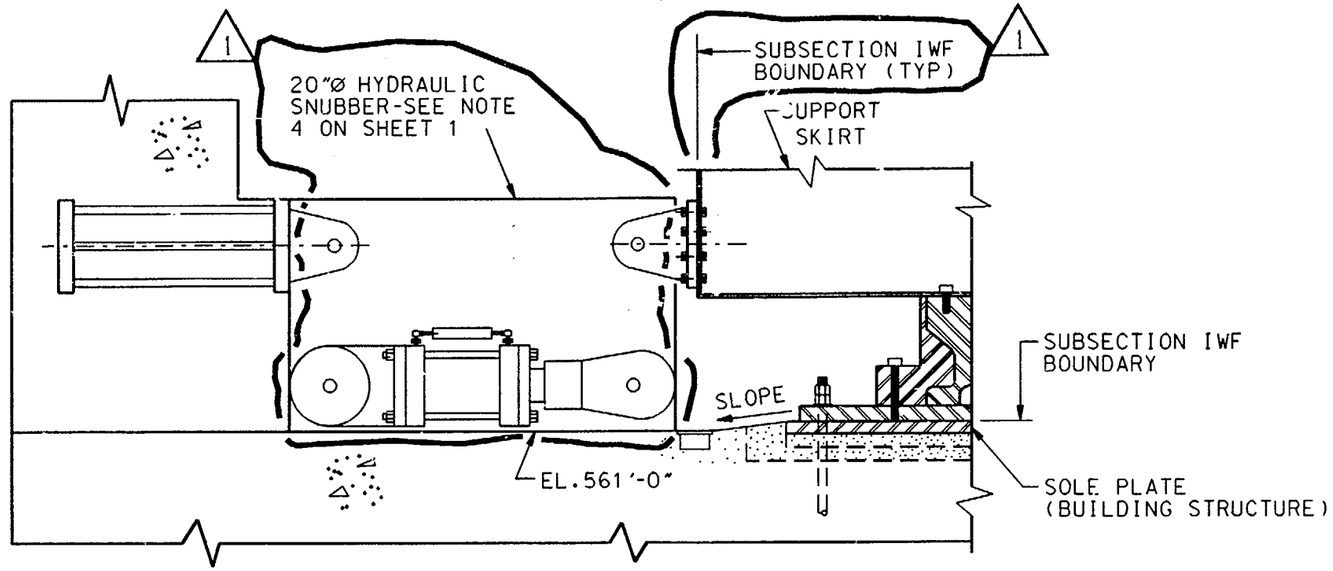

SECTION A-A

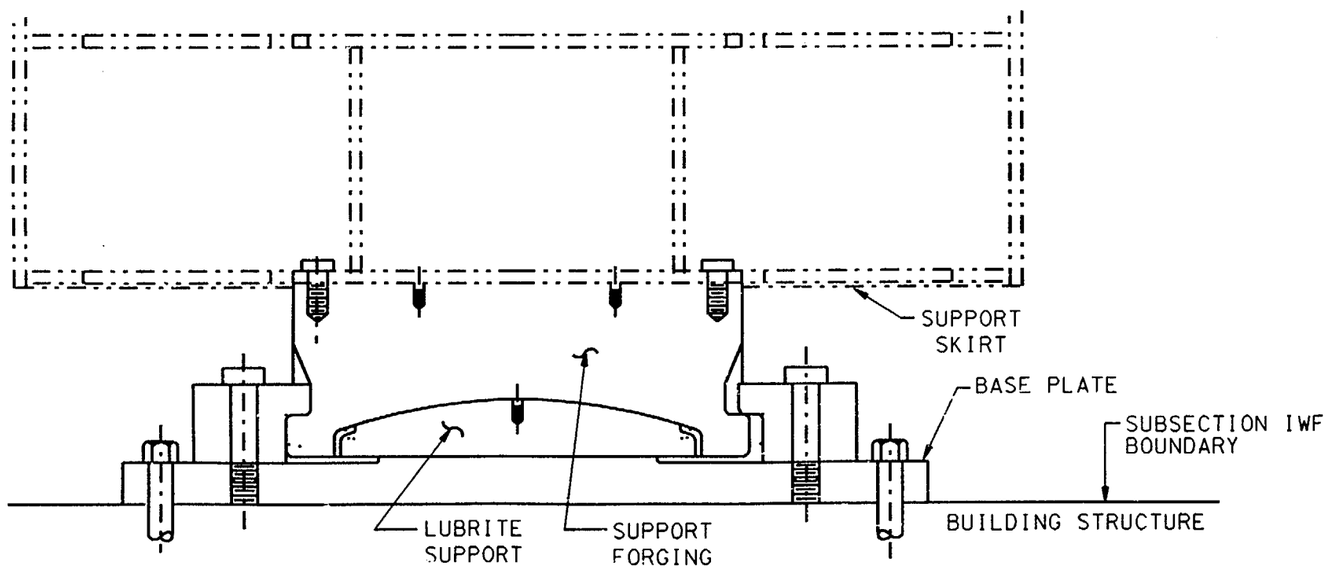

SLIDING SUPPORT DETAIL

NOTES:

1. FOR GENERAL NOTES AND REFERENCES SEE SHEET 1.

REV.	DATE	DESCRIPTION
1	9/24/92	INC DCN ISI-SK-036-3 FOR MOD 90-0079 SUPP.0
0	9/12/89	ISSUED FOR SECOND 10 YEAR INSERVICE INSPECTION INTERVAL

BY	CHK	ENGR	ENGR SUPV	ENG MGR
JOR		JJS	—	—

"INITIALS ON FILE"

SCALE N.T.S.	DESIGNED	DRAWN CB	DATE 5-26-89

DAVIS-BESSE NUCLEAR POWER STATION
UNIT NO. 1
THE TOLEDO EDISON COMPANY

Q

STEAM GENERATORS 1-1 AND 1-2
LOWER SUPPORTS

DRAWING NO.	REV.
ISI-SK-036 SHEET 2	1

DB:09-01-92 DFN=F:/ISI/ISI36SH2.DGN

I CERTIFY THAT THE IMAGE CONTAINED ON THIS FRAME WAS MADE IN

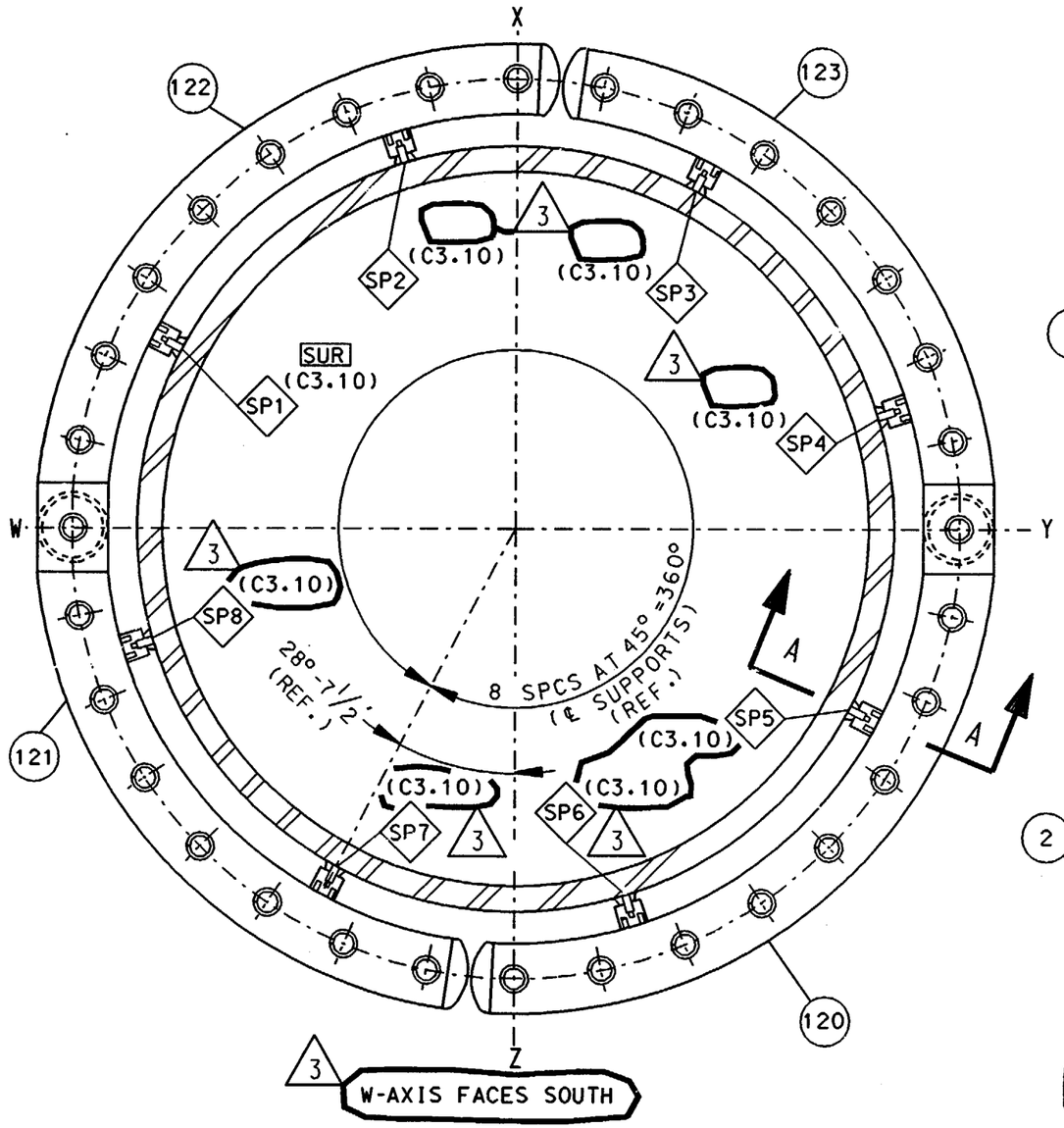

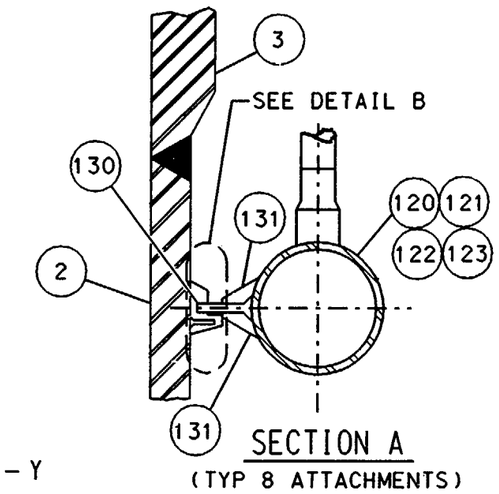

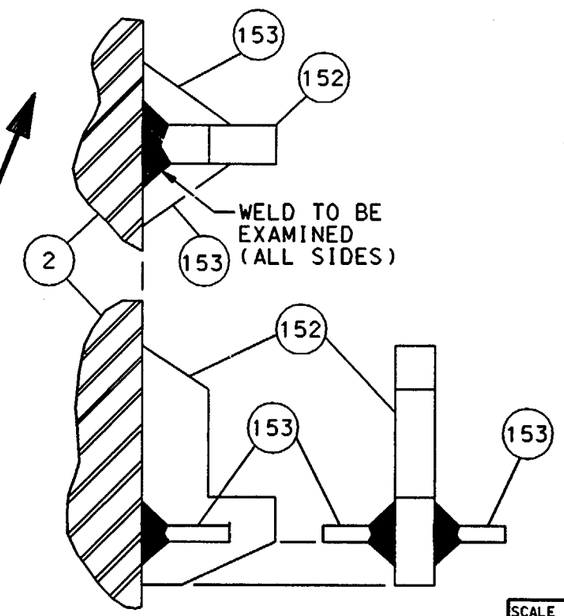

LEGEND:

SUR - SURFACE EXAMINATION

NOTES:

1. THE WELD NUMBER FOR THE INTEGRAL ATTACHMENTS TO THE STEAM GENERATOR SHELL ARE PRECEEDED BY "SP-SG-1-".
2. DELETED
3. THE ATTACHMENT WELD FOR MK 130 TO MK 120/121/123/124 IS EXAMINED AS A PIPING ATTACHMENT UNDER ASME SECTION XI EXAMINATION CATEGORY C-C, ITEM NO. C3.20.

REFERENCE DRAWINGS:

B&W 151923E FEEDWATER INLET CONNECTIONS (TED #7749-M-506-19)

B&W 151924E ASSEMBLY FEEDWATER HEADER AND NOZZLES (TED #7749-M-506-20)

MARK #	DESCRIPTION	MATERIAL
2	SHELL SECTION	SA516 GR70
3	SHELL SECTION	SA516 GR70
120	14 IN. FEEDWATER INLET HEADER	SA106 GRB
121	14 IN. FEEDWATER INLET HEADER	SA106 GRB
122	14 IN. FEEDWATER INLET HEADER	SA106 GRB
123	14 IN. FEEDWATER INLET HEADER	SA106 GRB
130	1 IN. SUPPORT PLATE	SA516 GR70
131	½ IN. GUSSET PLATE	SA516 GR70
152	1 IN. HEADER SUPPORT PLATE	SA516 GR70
153	½ IN. HEADER GUSSET PLATE	SA516 GR70

REV.	DATE	DESCRIPTION
3	8-21-00	INC. DCN ISI-SK-037-2 PER DDR 00-1766
2	9-30-92	INC. DCN ISI-SK-037-1 FOR DCR 91-0011
1	9-20-90	ISSUED FOR SECOND 10 YEAR INSERVICE INSPECTION INTERVAL

BY	CHK	ENGR	ENGR SUPV	ENG MGR
JOR	SBW	"INITIALS ON FILE"	"INITIALS ON FILE"	

SCALE N.T.S.	DESIGNED	DRAWN CB	DATE 5-3-89

DAVIS-BESSE NUCLEAR POWER STATION
UNIT NO. 1
THE TOLEDO EDISON COMPANY

STEAM GENERATOR 1-1
MAIN FEEDWATER ATTACHMENT WELDS
CONTAINMENT BUILDING

DRAWING NO.	REV.
ISI-SK-037	3

DB DATE: 08-01-00 DFN=J:/ISI/ISISK037.DGN

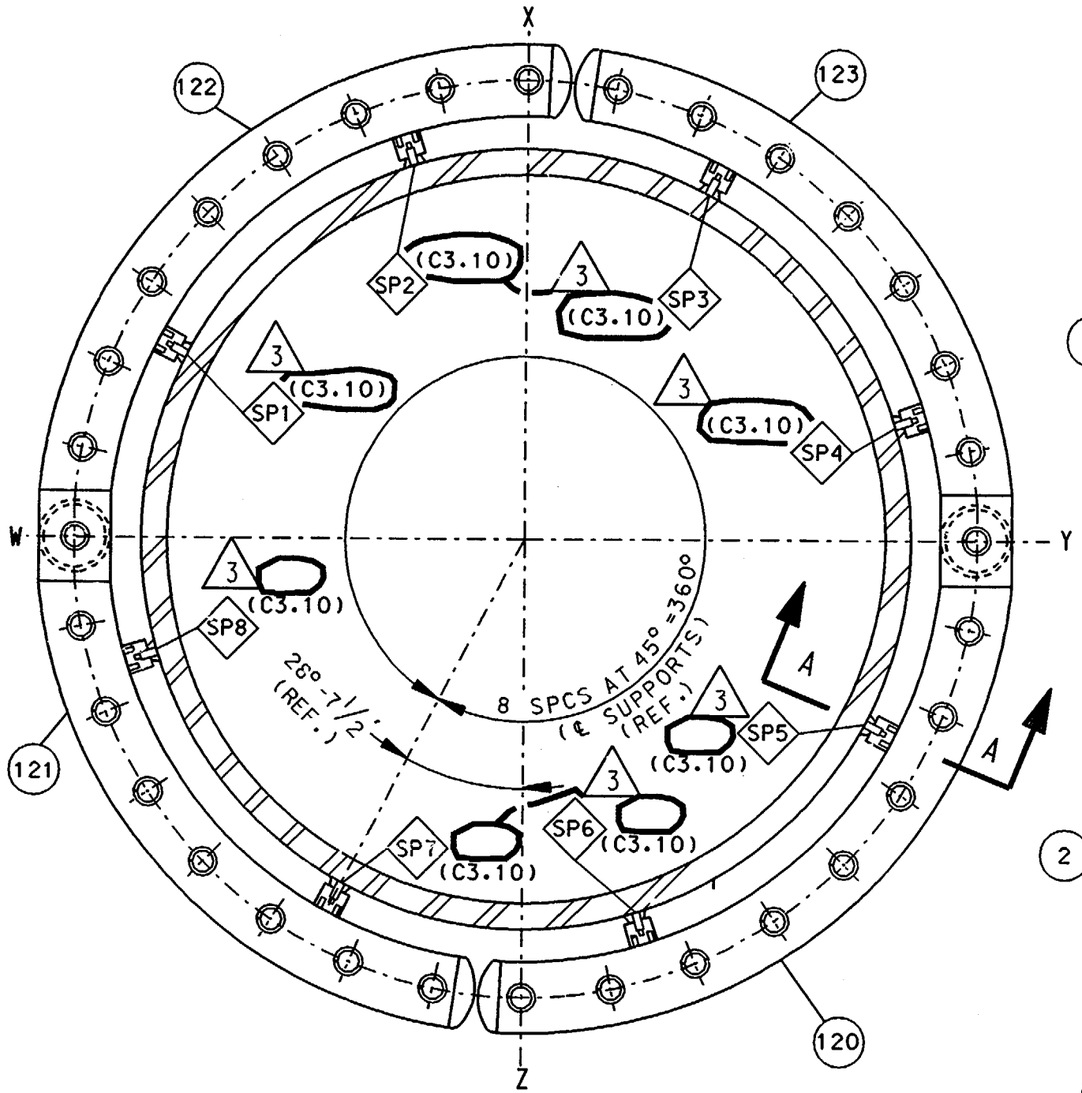

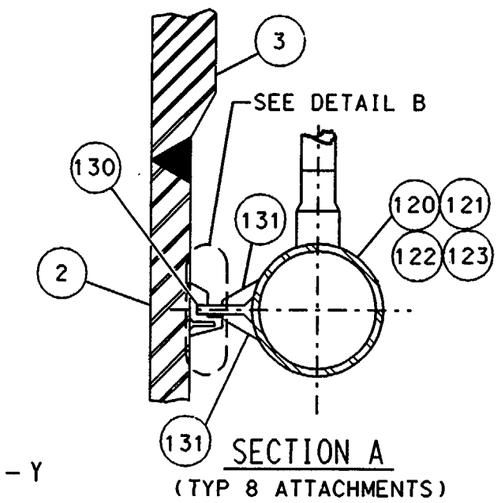

SECTION A
(TYP 8 ATTACHMENTS)

NOTES:

1. THE WELD NUMBER FOR THE INTEGRAL ATTACHMENTS TO THE STEAM GENERATOR SHELL ARE PRECEEDED BY "SP-SG-2-".
2. DELETED.

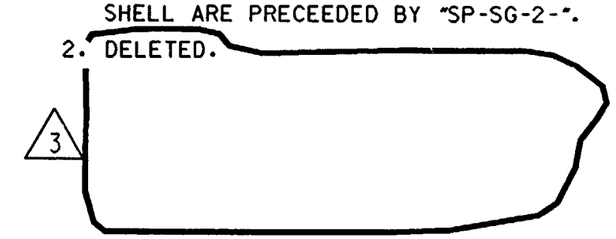

3. THE ATTACHMENT WELD FOR MK 130 TO MK 120/121/123/124 IS EXAMINED AS A PIPING ATTACHMENT UNDER ASME SECTION XI EXAMINATION CATEGORY C-C, ITEM NO. C3.20.

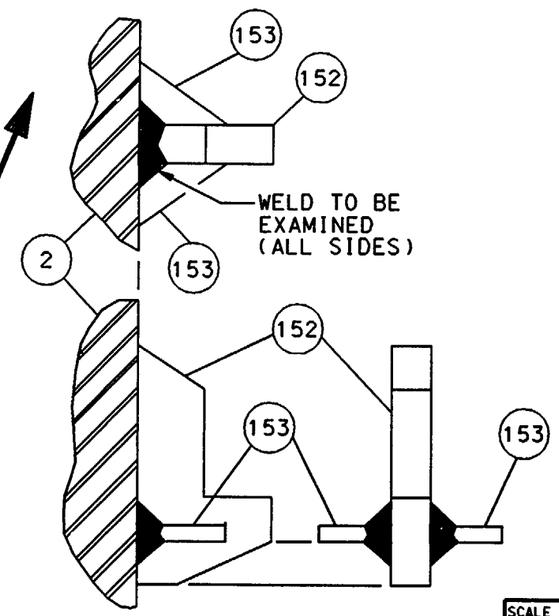

DETAIL B

REFERENCE DRAWINGS:

B&W 151923E FEEDWATER INLET CONNECTIONS (TED #7749-M-506-19)

B&W 151924E ASSEMBLY FEEDWATER HEADER AND NOZZLES (TED #7749-M-506-20)

MARK #	DESCRIPTION	MATERIAL
2	SHELL SECTION	SA516 GR70
3	SHELL SECTION	SA516 GR.70
120	14 IN. FEEDWATER INLET HEADER	SA106 GRB
121	14 IN. FEEDWATER INLET HEADER	SA106 GRB
122	14 IN. FEEDWATER INLET HEADER	SA106 GRB
123	14 IN. FEEDWATER INLET HEADER	SA106 GRB
130	1 IN. SUPPORT PLATE	SA516 GR.70
131	½ IN. GUSSET PLATE	SA516 GR.70
152	1 IN. HEADER SUPPORT PLATE	SA516 GR.70
153	½ IN. HEADER GUSSET PLATE	SA516 GR.70

REV.	DATE	DESCRIPTION
3	8-21-00	INC. DCN ISI-SK-038-2 PER DDR 00-1766
2	9-30-92	INC. DCN ISI-SK-038-1 FOR DCR 91-0011
1	9-20-90	ISSUED FOR SECOND 10 YEAR INSERVICE INSPECTION INTERVAL

BY	CHK	ENGR	ENGR SUPV	ENG MGR
JOR	SPW	"INITIALS ON FILE"	"INITIALS ON FILE"	MBL

SCALE N.T.S.	DESIGNED	DRAWN CB	DATE 5-3-89

DAVIS-BESSE NUCLEAR POWER STATION
UNIT NO. 1
THE TOLEDO EDISON COMPANY

0

STEAM GENERATOR 1-2
MAIN FEEDWATER ATTACHMENT WELDS
CONTAINMENT BUILDING

DRAWING NO.	REV.
ISI-SK-038	3

DB DATE: 08-01-00 DFN=J:/ISI/ISISK038.DGN

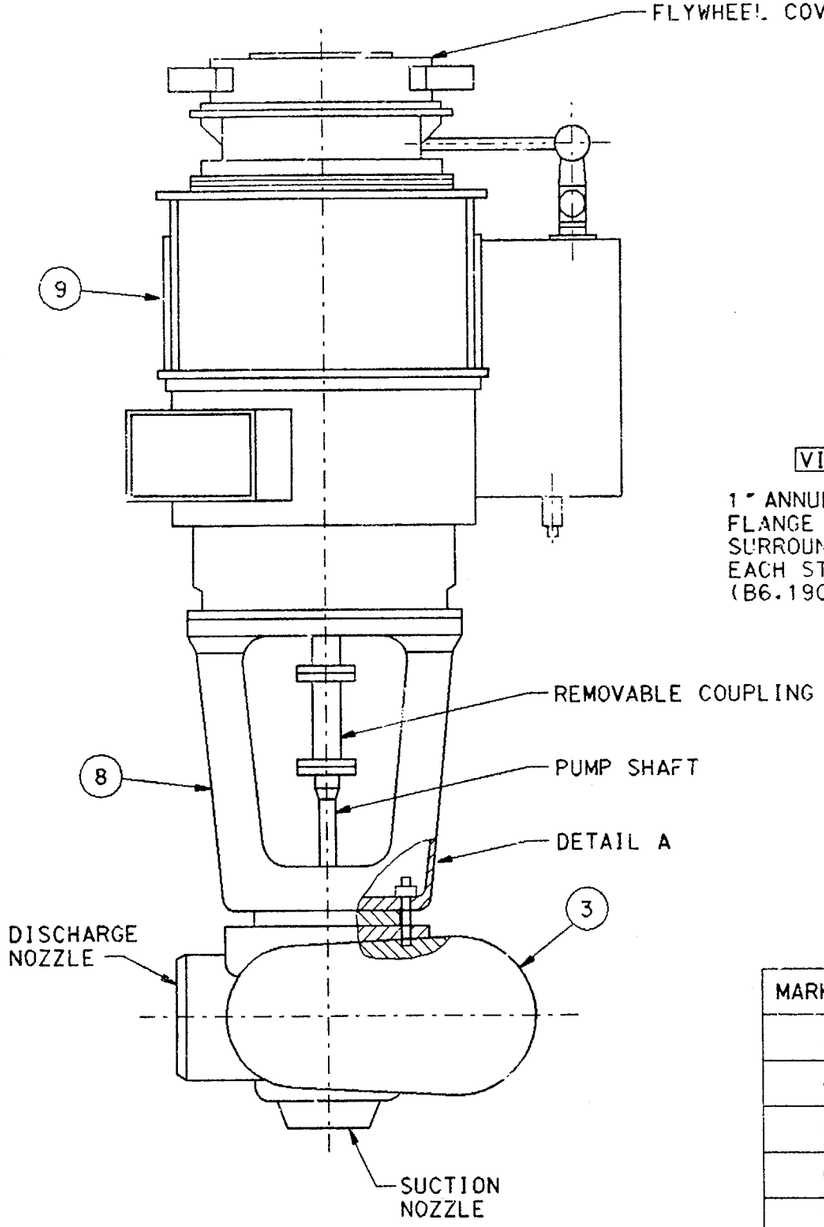

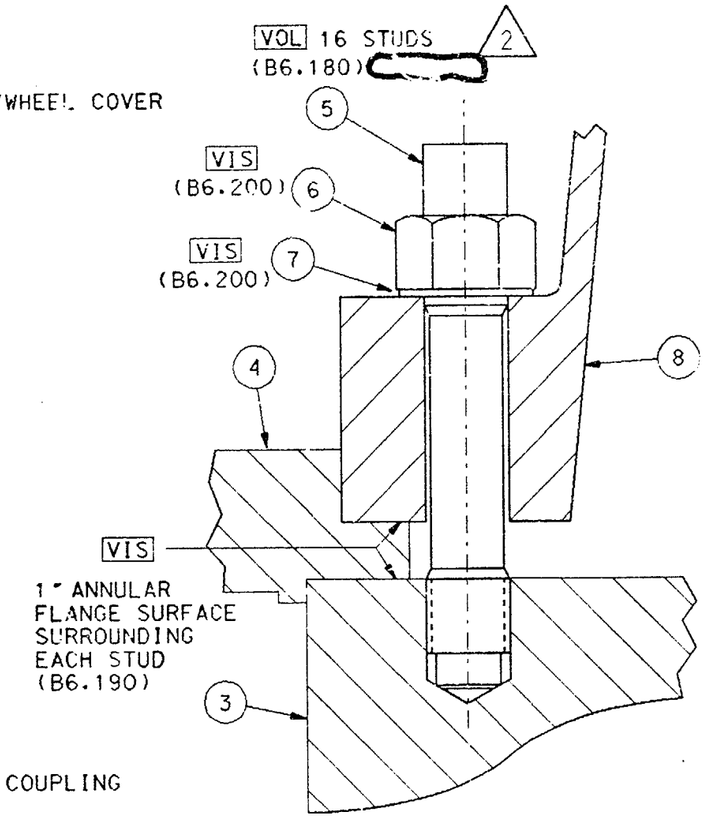

DETAIL A
COVER TO CASE ASSEMBLY

LEGEND:

VOL - VOLUMETRIC EXAMINATION
VIS - VISUAL (VT-1) EXAMINATION

NOTES:

1. THIS DRAWING IS APPLICABLE FOR THE FOLLOWING REACTOR COOLING PUMPS:

PUMP NO.	EQUIPMENT NO.	BJ SERIAL NO.
1-1-1	P36-1	701-N-0243
1-1-2	P36-2	701-N-0241
1-2-1	P36-3	701-N-0240
1-2-2	P36-4	701-N-0242

2. THE MARK NUMBERS SHOWN ARE FOR ISI ONLY.

REFERENCE DRAWINGS:

1. B-J 1F-8737 REACTOR COOLANT PUMP INTERNALS (TED #7749-M-508-74)
2. B-J 2F-1424 OUTLINE & PUMP ORIENTATION (TED #7749-M-508-10)
3. B-J L000391 ROTATING ELEMENT SECTION (TED #12501-M508Q-14)
4. B-J MATERIALS LIST (TED #7749-M-508-11)

MARK NO.	DESCRIPTION	MATERIAL
3	PUMP CASE ASSEMBLY	A351 CF8M
4	PUMP COVER	A351 CF8M
5	4 3/4" DIA. STUD (16)	A540 GRB23 CL4
6	4 3/4" DIA. NUT (16)	A194 GR7
7	WASHER (16)	N/A
8	PUMP MOTOR SUPPORT	N/A
9	PUMP MOTOR ASSEMBLY	N/A
	PUMP SHAFT	

SCALE N.T.S.	DESIGNED	DRAWN WME	DATE 5-3-89

DAVIS-BESSE NUCLEAR POWER STATION
UNIT NO. 1
THE TOLEDO EDISON COMPANY

Q

REACTOR COOLANT PUMP OUTLINE AND BOLTING DETAILS

DRAWING NO.	REV.
ISI-SK-040	2

REV.	DATE	DESCRIPTION
2	1-3-92	INC. DCN ISI-SK-040-1 FOR RFA 92-0689
1	9/20/90	ISSUED FOR SECOND 10 YEAR INSERVICE INSPECTION INTERVAL

BY	CHK	ENGR	ENGR SUPV	ENG MGR
JFS	"INITIALS ON FILE"	JJS	—	

DB: 01-04-93 DFN=OS1:[55,7]ISISK040.DGN

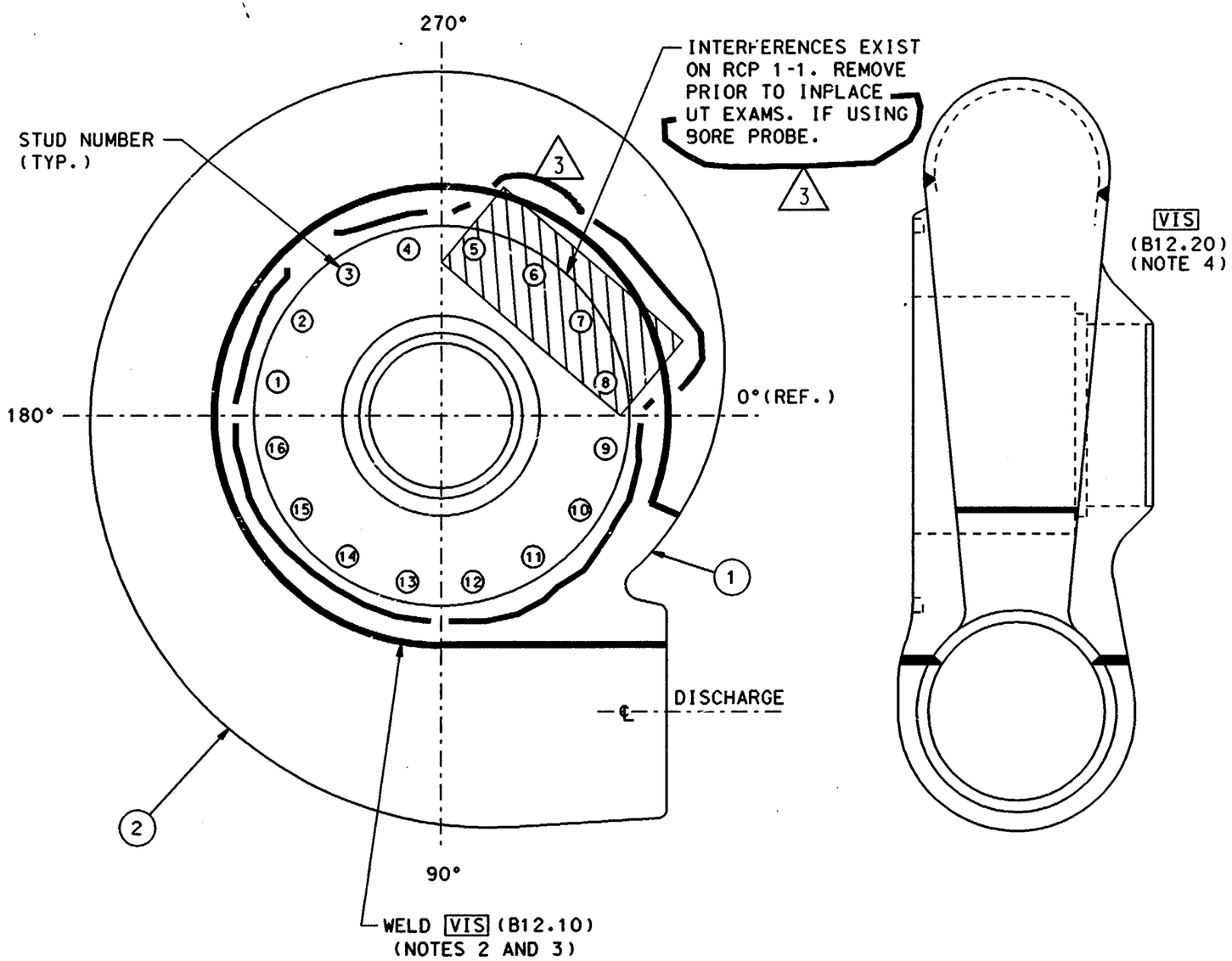

LEGEND:

VIS - VISUAL (VT-3) EXAMINATION

NOTES:

1. THIS DRAWING IS APPLICABLE FOR REACTOR COOLANT PUMPS 1-1-1 (P36-1) AND 1-2-2 (P36-4).
2. THE PUMP CASE WELD IS CONTINUOUS AND CONSISTS OF THE HORIZONTAL UPPER SCROLL WELD, THE VERTICAL TORUS WELD AND THE HORIZONTAL LOWER SCROLL WELD.
3. A VISUAL VT-3 EXAMINATION IS REQUIRED WHEN THE PUMP CASE IS OPENED FOR MAINTENANCE. SEE CODE CASE N-481.
4. A VISUAL VT-3 EXAMINATION OF THE ACCESSABLE INTERNAL SURFACES IS REQUIRED IF THE PUMP CASES IS OPENED FOR MAINTENANCE.
5. THE MARK NUMBERS SHOWN ARE FOR ISI ONLY.

REFERENCE DRAWINGS:

B-J 2B-12865 AS-BUILT DIMENSIONS (TED #7749-M-508-43)

MARK NO.	DESCRIPTION
1	PUMP CASE HUB
2	PUMP CASE SCROLL

REV.	DATE	DESCRIPTION
2	1/08/93	INC DCN ISI-SK-041-2 FOR RFA 92-0689
3	10/6/97	INC DCN ISI-SK-041-3 PER DDR 97-0187
0	9/12/89	ISSUED FOR SECOND 10 YEAR INSERVICE INSPECTION INTERVAL

BY	CHK	ENGR	ENGR SUPV	ENG MGR
SBW	DVK	ALS ON FILE		
	"INIT	ALS ON FILE		

SCALE N.T.S. | DESIGNED | DRAWN WME | DATE 5-3-89

DAVIS-BESSE NUCLEAR POWER STATION
UNIT NO. 1
THE TOLEDO EDISON COMPANY

0

RCP 1-1-1 AND RCP 1-2-2
PUMP CASE ASSEMBLY

DRAWING NO.	REV.
ISI-SK-041	3

DB: 10-01-97 DFN=I:/ISI/ISISK041.DGN

REV.	DATE	DESCRIPTION	BY	CHK	ENGR	ENGR SUPV	ENG MGR
1	7/24/92	INC DCN ISI-SK-042-1 FOR DCR 91-0011	JOR				
0	9/12/89	ISSUED FOR SECOND 10 YEAR INSERVICE INSPECTION INTERVAL		"INITIALS ON FILE"	JJS	–	–

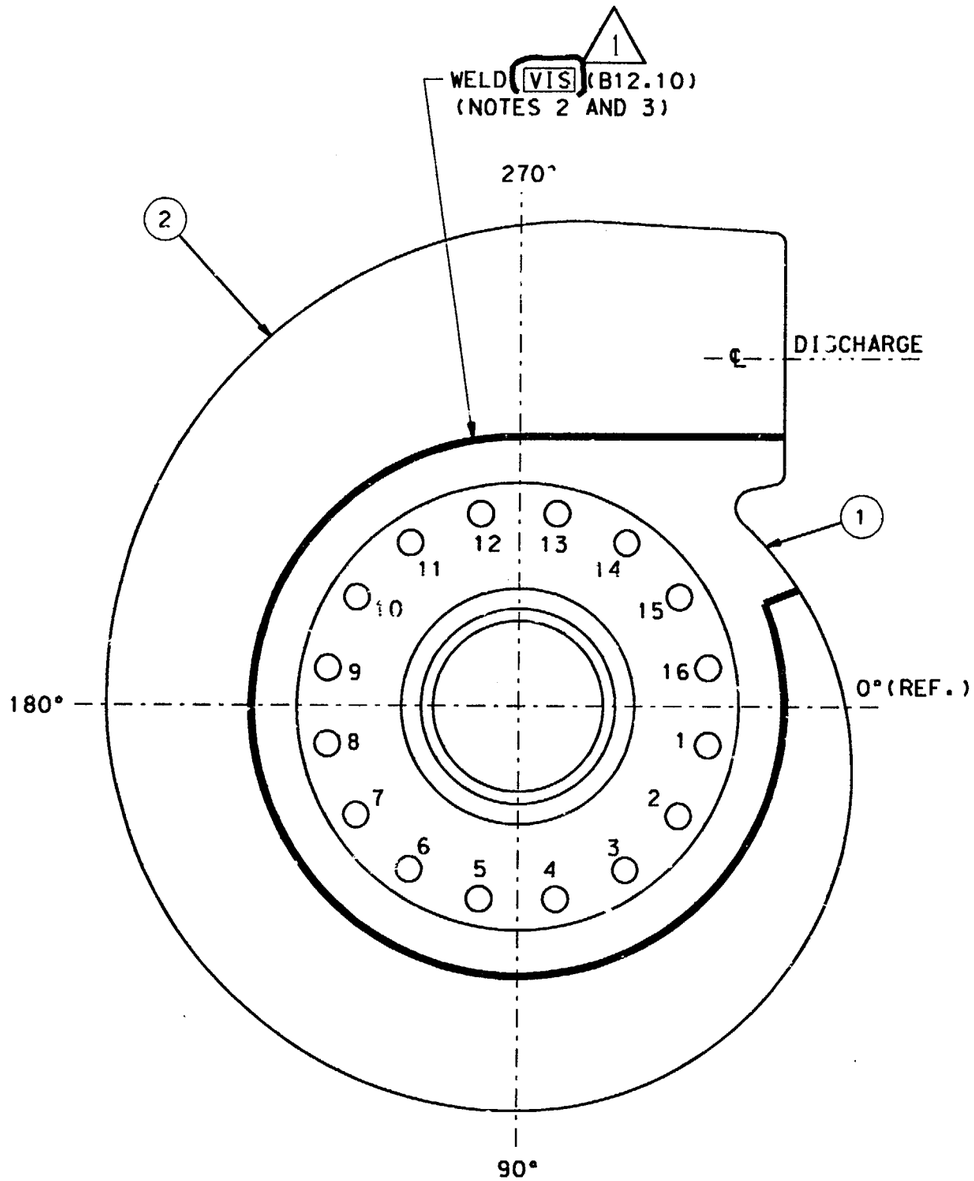

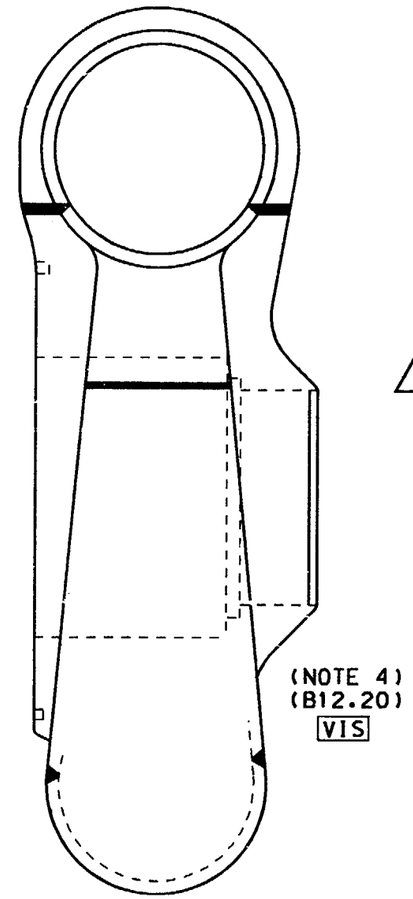

LEGEND:

VIS - VISUAL (VT-3) EXAMINATION

NOTES:

1. THIS DRAWING IS APPLICABLE FOR REACTOR COOLANT PUMPS 1-1-2 (P36-2) AND 1-2-1 (P36-3).
2. THE PUMP CASE WELD IS CONTINUOUS AND CONSISTS OF THE HORIZONTAL UPPER SCROLL WELD, THE VERTICAL TORUS WELD AND THE HORIZONTAL LOWER SCROLL WELD.
3. A VISUAL VT-3 EXAMINATION IS REQUIRED WHEN THE PUMP CASE IS OPENED FOR MAINTENANCE. SEE CODE CASE N-481.
4. A VISUAL VT-3 EXAMINATION OF THE ACCESSABLE INTERNAL SURFACES IS REQUIRED IF THE PUMP CASE IS OPENED FOR MAINTENANCE.
5. THE MARK NUMBERS SHOWN ARE FOR ISI ONLY.

MARK NO.	DESCRIPTION
1	PUMP CASE HUB
2	PUMP CASE SCROLL

SCALE N.T.S.	DESIGNED	DRAWN WME	DATE 5-3-89

DAVIS-BESSE NUCLEAR POWER STATION
UNIT NO. 1
THE TOLEDO EDISON COMPANY

Q

RCP 1-1-2 AND RCP 1-2-1
PUMP CASE ASSEMBLY

DRAWING NO.	REV.
ISI-SK-042	1

DB:08-31-92 DFN=F:/ISI/ISISK042.DGN

I CERTIFY THAT THE IMAGE CONTAINED ON THIS FRAME WAS MADE IN

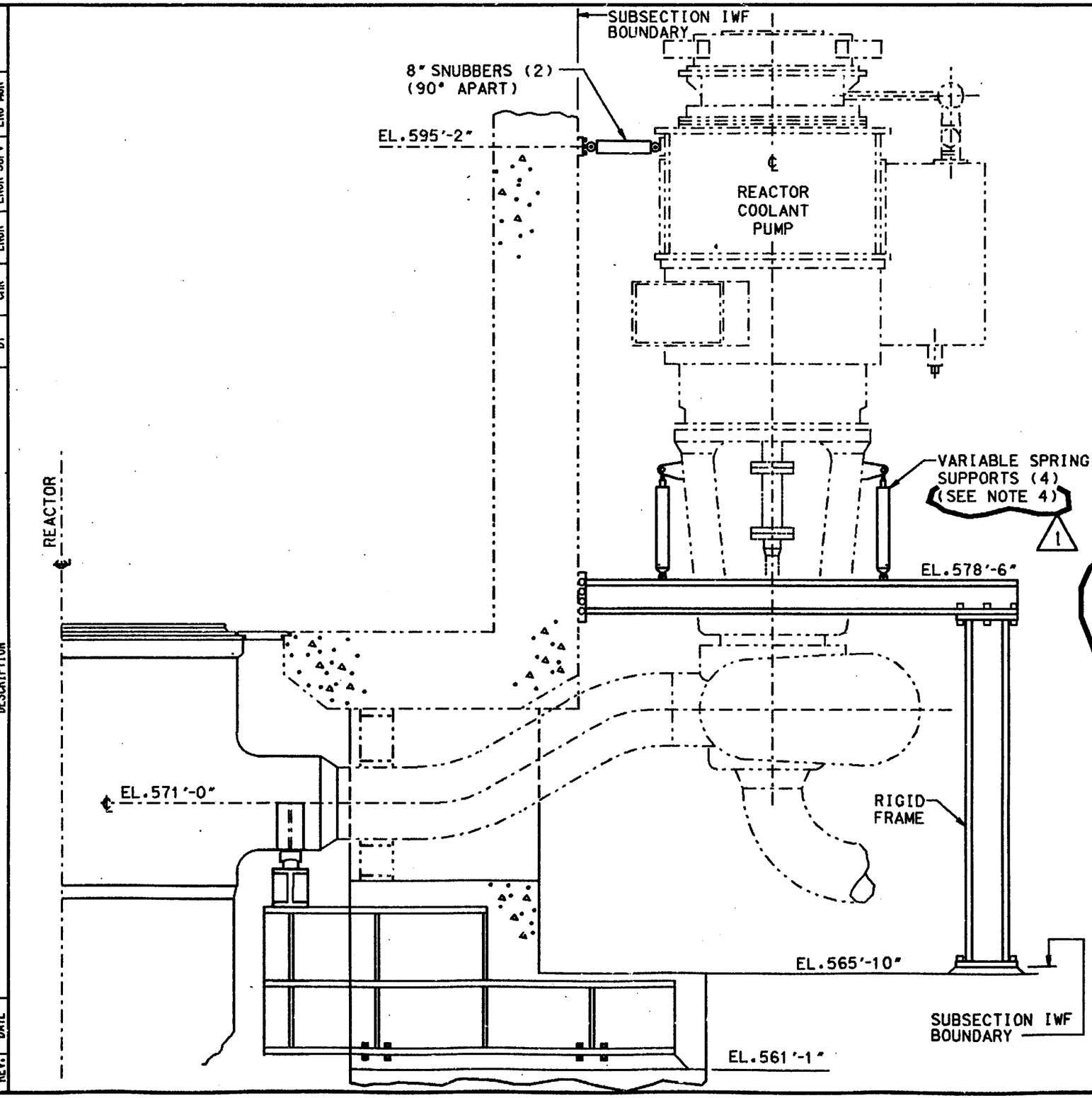

NOTES:

1. THE CONFIGURATION SHOWN IS TYPICAL FOR EACH OF THE FOUR REACTOR COOLANT PUMPS:

PUMP NO.	EQUIPMENT NO.	SNUBBER NO.	DIRECTION
1-1-1	P36-1	1	EAST/WEST
		2	NORTH/SOUTH
1-1-2	P36-2	3	EAST/WEST
		4	NORTH/SOUTH
1-2-1	P36-3	5	EAST/WEST
		6	NORTH/SOUTH
1-2-2	P36-4	7	EAST/WEST
		8	NORTH/SOUTH

2. THE SUPPORTS FOR EACH REACTOR COOLANT PUMP CONSIST OF THE RIGID FRAME, FOUR VARIABLE SPRING SUPPORTS AND TWO HYDRAULIC SNUBBERS.

3. A VT-3 EXAMINATION SHALL BE PERFORMED ON THE SUPPORTS FOR ONE OF THE FOUR REACTOR COOLANT PUMPS. THE VT-3 EXAMINATION SHALL BE PERFORMED FROM EACH BOLTED OR WELDED CONNECTION TO THE BUILDING STRUCTURE (EMBED) TO THE BOLTED (PINNED) CONNECTIONS TO THE PUMP MOTOR AND PUMP MOTOR SUPPORTS. THE PUMP MOTOR AND PUMP MOTOR SUPPORTS ARE DEFINED AS INTERVENING ELEMENTS.

4. SPRING SUPPORT PIN-TO-PIN DIMENSIONS:
COLD - 45 5/8" ± 9/16" OR THE SPRING NEED ONLY BE IN THE WORKING RANGE IF THE HOT PIN-TO-PIN IS VERIFIED ACCEPTABLE.
HOT - 46 1/8" ± 1/4".
REFERENCE CALC. C-CSS-64.03-011.

1

REFERENCE DRAWINGS:

C-182 CONTAINMENT INTERNAL STRUCTURES COOLANT PUMP STEEL SUPPORT DETAILS

C-183 CONTAINMENT INTERNAL STRUCTURES COOLANT PUMP RESTRAINTS.

B&W 134619C PUMP VARIABLE SPRING SUPPORTS (TED #7749-M-503-24)

SCALE N.T.S.	DESIGNED	DRAWN CB	DATE 5-26-89

DAVIS-BESSE NUCLEAR POWER STATION
UNIT NO. 1
THE TOLEDO EDISON COMPANY

REACTOR COOLANT PUMP SUPPORTS

DRAWING NO.	REV.
ISI-SK-043	1

REV.	DATE	DESCRIPTION					
1	6-11-93	INC. DCN ISI-SK-043-1 PER RFA 93-0126	SBW	JJS	—	—	—
0	9-12-89	ISSUED FOR SECOND 10 YEAR INSERVICE INSPECTION INTERVAL	CB	PJC	JRB	LLC	EA
			BY	CHK	ENGR	ENGR SUPV	ENG MGR

DB 05-26-93 DFN=:/USR3/ISI/ISISK043.DGN

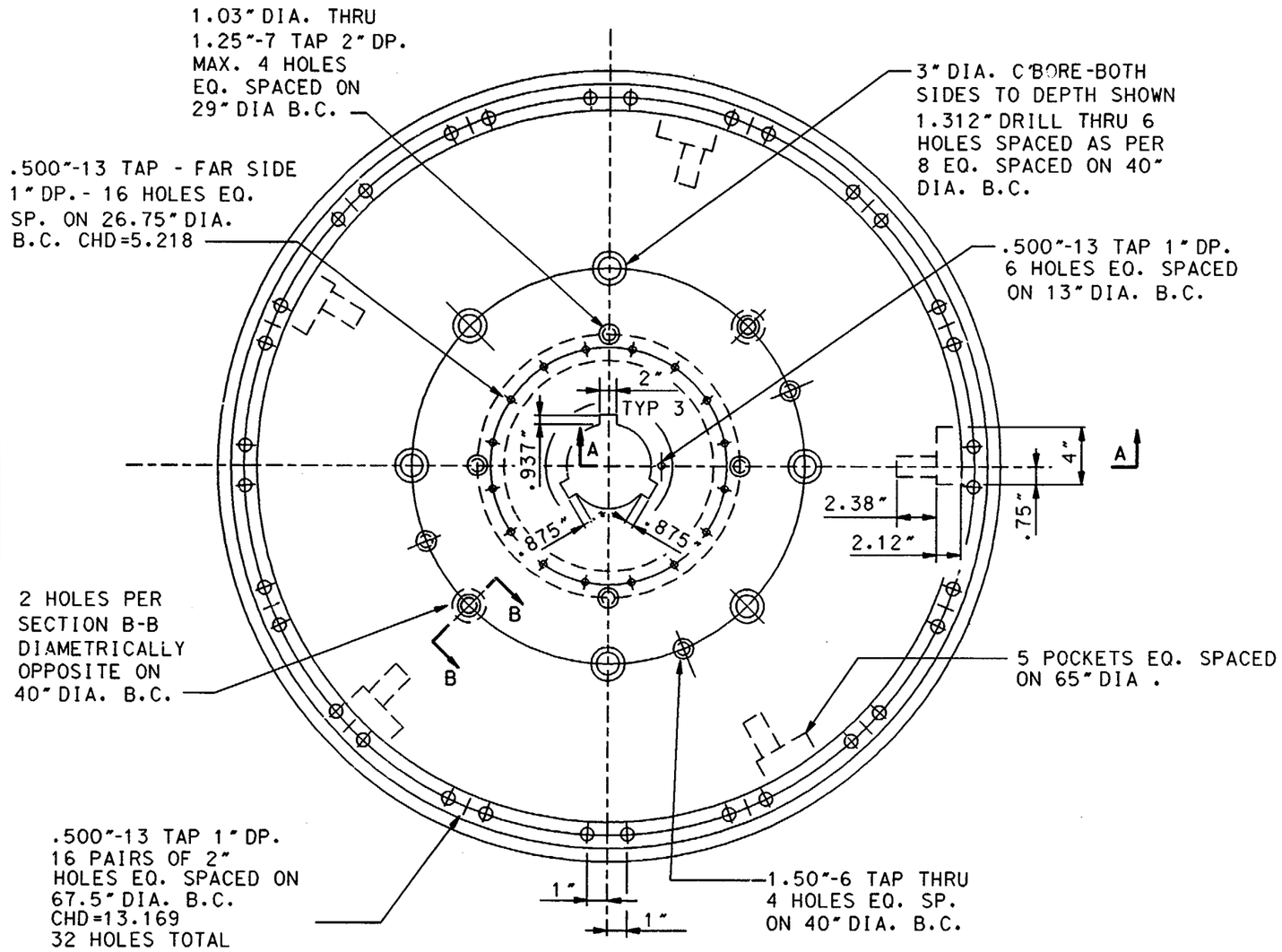

ORIGINAL DESIGN

NOTES:

1. DELETED.

3

2. DELETED.

3. ALL EXAMINATIONS THAT ARE PERFORMED ON THE PUMP FLYWHEELS ARE AUGMENTED.

4. SPARE REACTOR COOLANT PUMPS WITH FLYWHEELS ARE PERIODICALLY INTERCHANGED WITH INSTALLED REACTOR COOLANT PUMPS. THE LOCATION OF THE FLYWHEELS ARE IDENTIFIED IN THE ISI DATABASE.

3

5. FOR NEW DESIGN OF REACTOR COOLANT PUMP FLYWHEEL DETAIL SEE DWG. ISI-SK-044 SH.3.

6. EXAMINATION IS PERFORMED IN ACCORDANCE WITH DAVIS-BESSE TECHNICAL SPECIFICATION 4.4.10.1.

REFERENCE DRAWINGS:

1. WESTINGHOUSE ELECTRIC CORP. DRAWING 8334D83

REV.	DATE	DESCRIPTION	BY	CHK	ENGR	ENGR SUPV	ENG MGR
2	07-19-93	INC DCN ISI-SK-044-2 FOR RFA 93-0254	JOR	"INITIALS ON FILE"	"INITIALS ON FILE"	"INITIALS ON FILE"	—
3	8/21/00	INC DCN ISI-SK-044-3 PER DDR 00-1766					—
0	9/12/89	ISSUED FOR SECOND 10 YEAR INSERVICE INSPECTION INTERVAL					

SCALE N.T.S.	DESIGNED	DRAWN CB	DATE 5-3-89

DAVIS-BESSE NUCLEAR POWER STATION
UNIT NO. 1
THE TOLEDO EDISON COMPANY

Q

REACTOR COOLANT PUMP
FLYWHEEL DETAIL

DRAWING NO.	REV.
ISI-SK-044 SH.1	3

DB: 08-01-00 DFN=J:/ISI/ISISK044.DGN

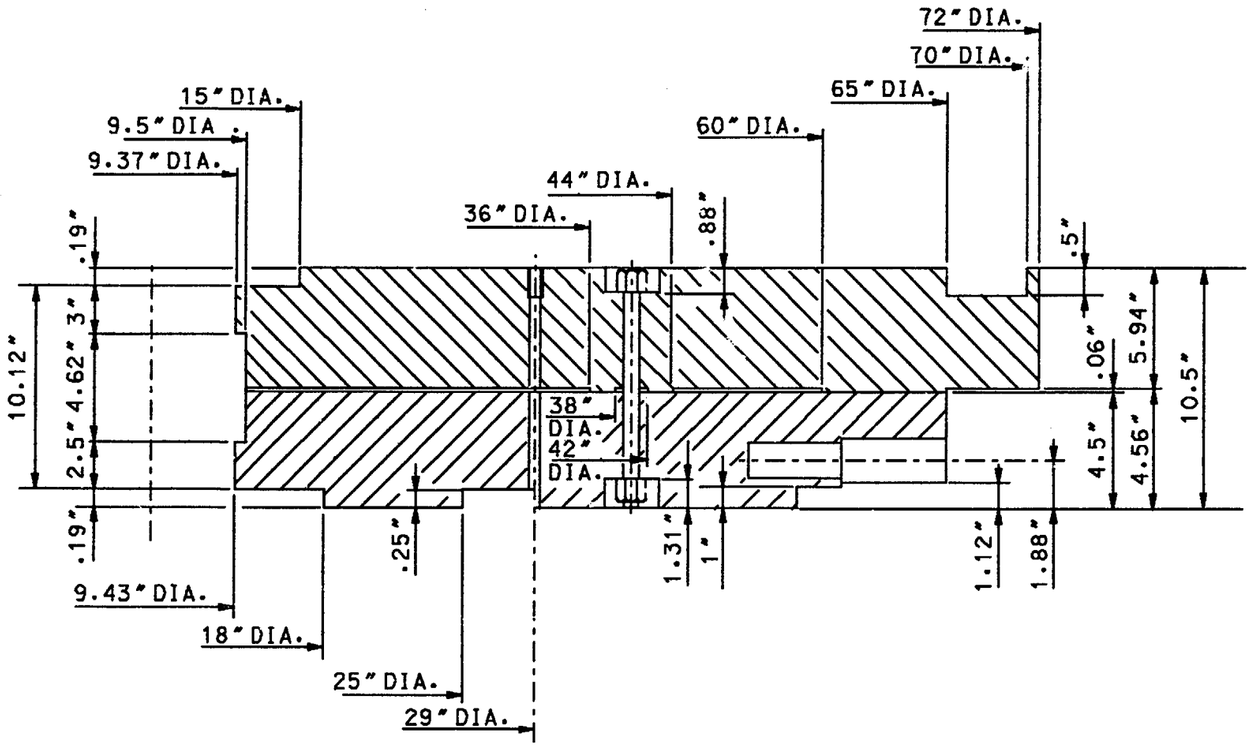

SECTION A-A

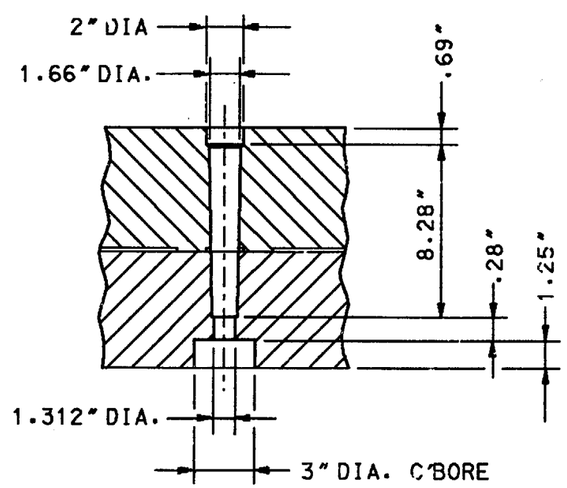

SECTION B-B

NOTES:

1. FOR EXAMINATION REQUIREMENTS, NOTES AND REFERENCES, SEE SHEET 1 OF THIS DRAWING.

REV.	DATE	DESCRIPTION
0	9/20/89	ISSUED FOR SECOND 10 YEAR INSERVICE INSPECTION INTERVAL

BY	CHK	ENGR	ENGR SUPV	ENG MGR
CB	PJC	JRB	LLC/EVC	EJC

SCALE N.T.S.	DESIGNED	DRAWN CB	DATE 5-3-89

DAVIS-BESSE NUCLEAR POWER STATION
UNIT NO. 1
THE TOLEDO EDISON COMPANY

Q

REACTOR COOLANT PUMP
FLYWHEEL DETAIL

DRAWING NO.	REV.
ISI-SK-044 SH.2 OF 2	0

DFN=QS1:[55,7]ISISK044.DGN

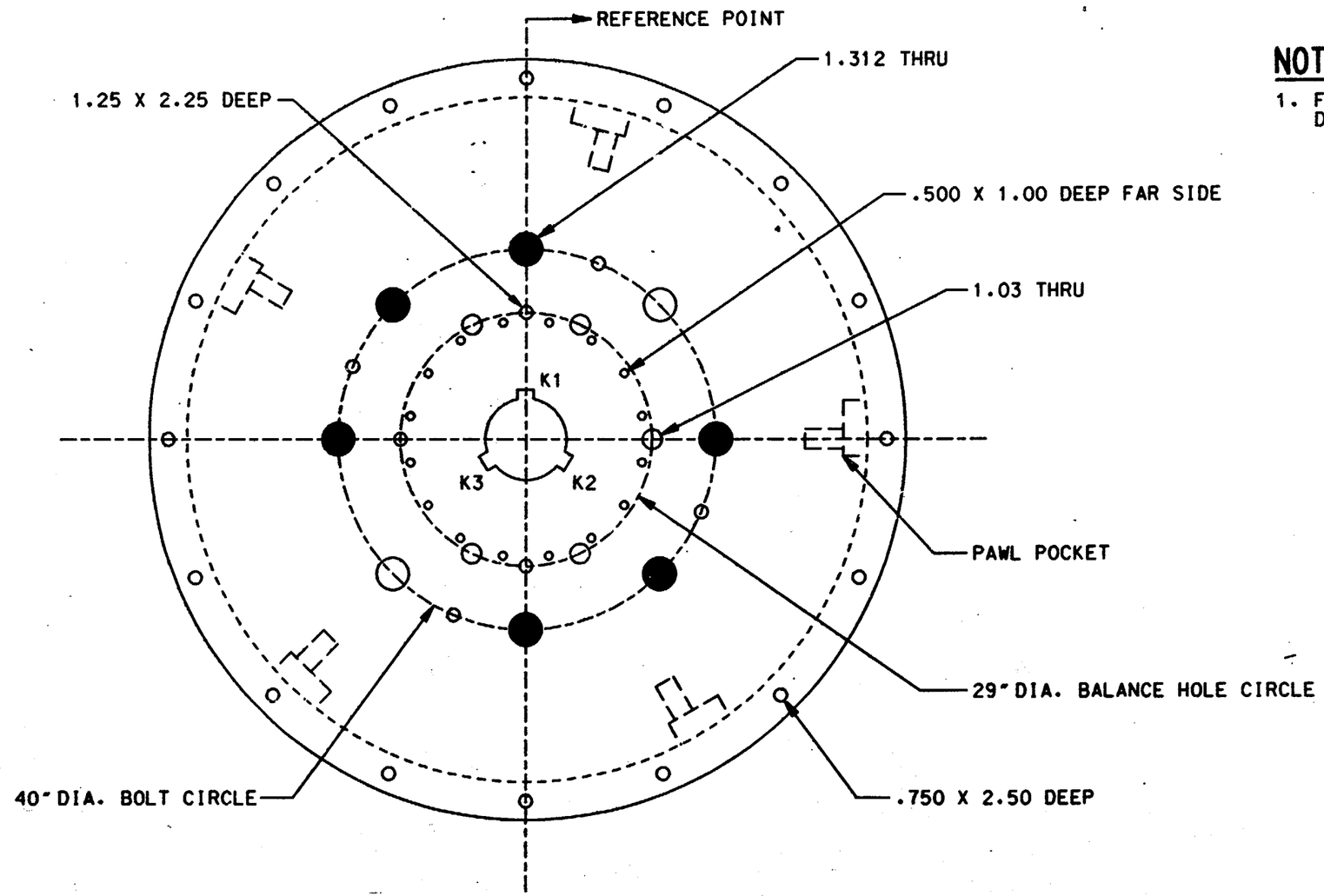

NEW DESIGN

NOTES:

1. FOR NOTES AND REFERENCE DRAWINGS SEE DWG. ISI-SK-044 SH.1.

REV.	DATE	DESCRIPTION	BY	CHK	ENGR	ENGR SUPV	ENG MGR
0	[illegible]	INC DCN ISI-SK-044-2 FOR RFA 93-0254	JFS	SBW	JJS	—	—

SCALE N.T.S.	DESIGNED	DRAWN JFS	DATE07-01-93

DAVIS-BESSE NUCLEAR POWER STATION
UNIT NO. 1
THE TOLEDO EDISON COMPANY

REACTOR COOLANT PUMP
FLYWHEEL DETAIL

DRAWING NO.	REV.
ISI-SK-044 SH.3	0

DB: 07-13-93 DFN=F:/ISI/ISISK044.DGN

I CERTIFY THAT THE IMAGE CONTAINED ON THIS FRAME WAS MADE IN THE NORMAL AND REGULAR COURSE OF BUSINESS, ON THE DATE STATED

DECAY HEAT NOZZLE	WELD ID	DESCRIPTION	EXAMINATION	CLASS 2 TUBE SIDE MATERIALS	CLASS 3 SHELL SIDE MATERIALS
INLET	C	REINFORCING PLATE TO NOZZLE WELD	SURFACE	SA240 TP304 TO SA312 TP304	SA285-C TO SA53-B
	I	REINFORCING PLATE TO SHELL WELD	SURFACE	SA240 TP304	SA285-C
OUTLET	E	REINFORCING PLATE TO NOZZLE WELD	SURFACE	SA240 TP304 TO SA312 TP304	SA285-C TO SA53-B
	J	REINFORCING PLATE TO SHELL WELD	SURFACE	SA240 TP304	SA285-C

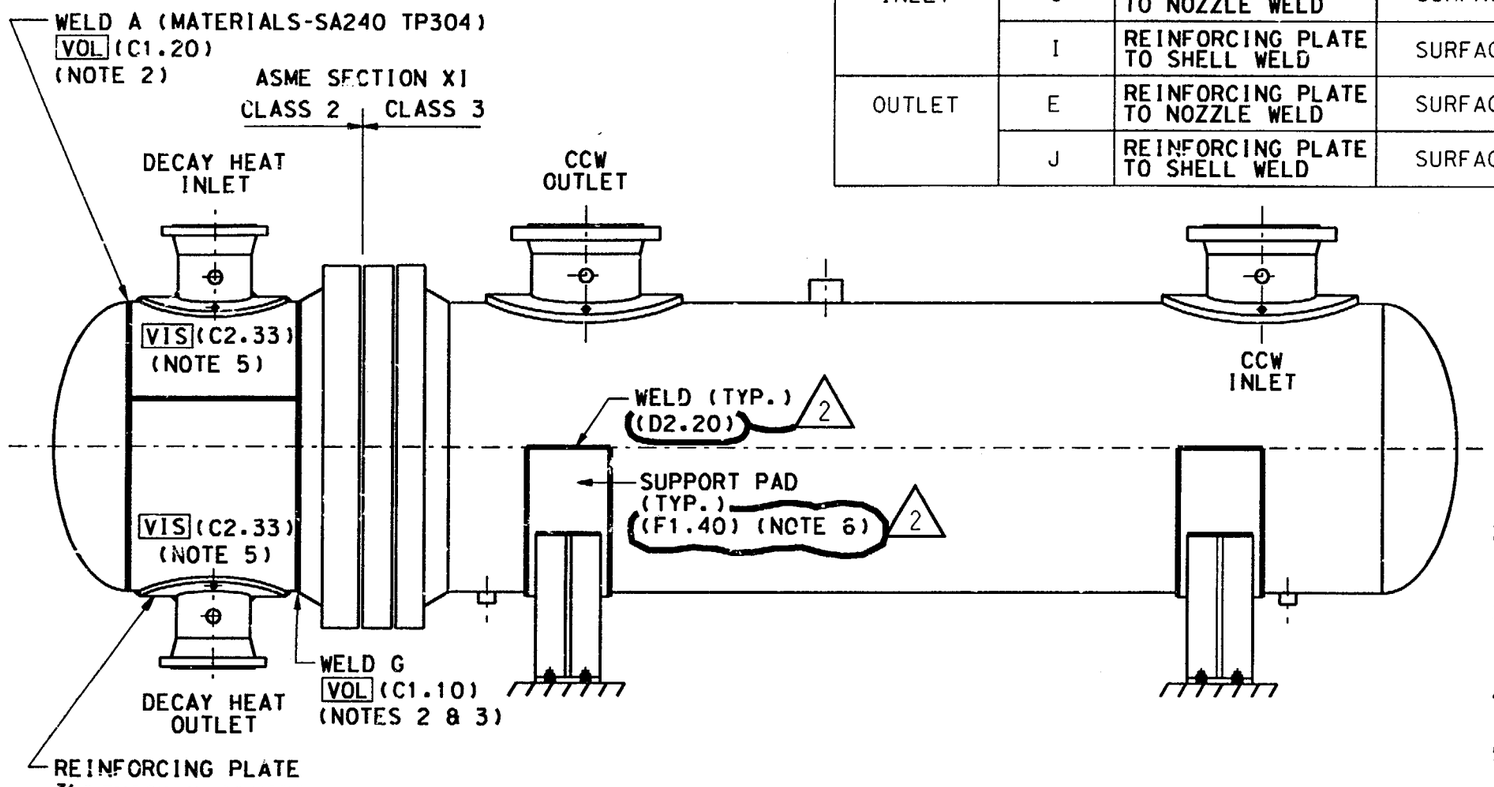

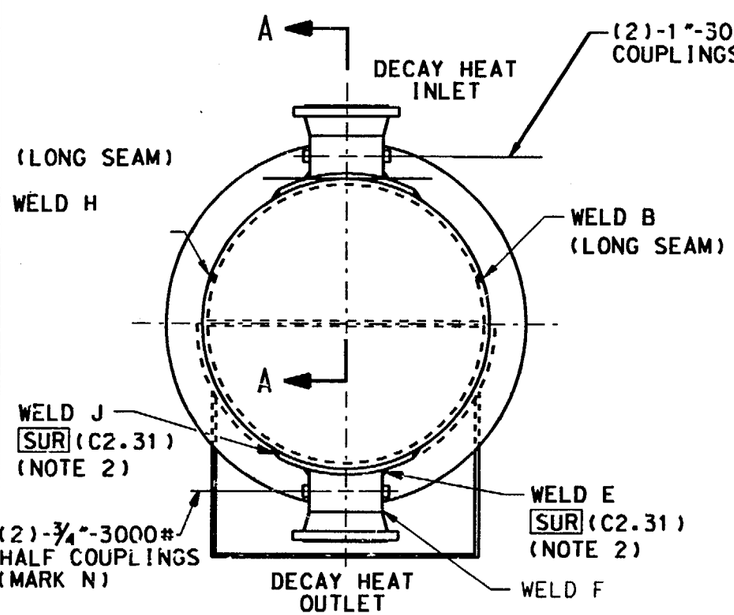

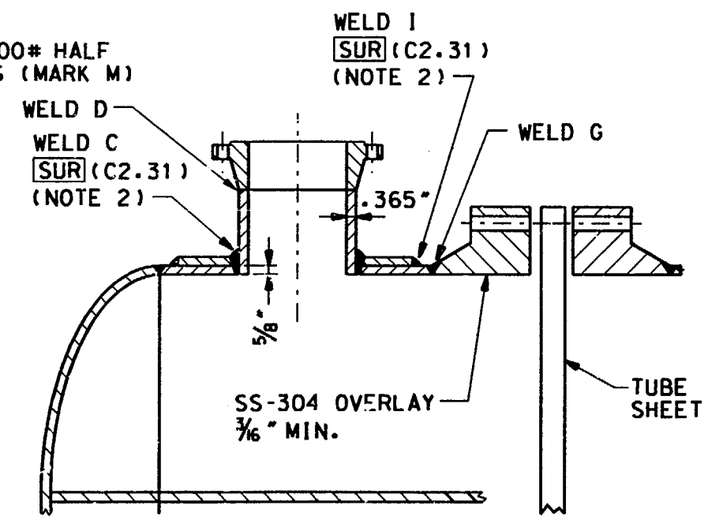

SECTION A-A

LEGEND:

VOL - VOLUMETRIC EXAMINATION
SUR - SURFACE EXAMINATION
VIS - VISUAL (VT-2) EXAMINATION

NOTES:

1. THIS DRAWING IS APPLICABLE TO DECAY HEAT COOLERS 1-1 (E27-1) AND 1-2 (E27-2).
2. UNLESS OTHERWISE SPECIFIED, ALL EXAMINATIONS ARE PERFORMED ON THE CLASS 2 SIDE OF DECAY HEAT COOLER 1-1 (E27-1).
3. THE ULTRASONIC EXAMINATION OF WELD G IS PERFORMED FROM ONE SIDE ONLY PER RELIEF REQUEST RR B1.
4. SECTION A-A IS TYPICAL FOR BOTH THE INLET AND OUTLET DECAY HEAT NOZZLES.
5. A VT-2 EXAMINATION OF THE TWO TELLTALE HOLES IN THE REINFORCING PLATE OF EACH NOZZLE IS REQUIRED DURING THE SYSTEM FUNCTIONAL TEST.
6. A VT-3 EXAMINATION SHALL BE PERFORMED ON THE SUPPORTS FOR DECAY HEAT COOLER 1-1 (E27-1). THE VT-3 EXAMINATION SHALL BE PERFORMED FROM EACH BOLTED CONNECTION TO THE BUILDING STRUCTURE TO THE SUPPORT PAD ATTACHMENT WELD TO THE SHELL.

REFERENCE DRAWINGS:

ATLAS INDUSTRIAL MFG. CO. D2552-6
(TED #7749-M-517-8)

SCALE N.T.S.	DESIGNED	DRAWN WME	DATE 5-3-89

DAVIS-BESSE NUCLEAR POWER STATION
UNIT NO. 1
THE TOLEDO EDISON COMPANY

Q

DECAY HEAT COOLERS 1-1 AND 1-2
OUTLINE AND SUPPORTS

DRAWING NO.	REV.
ISI-SK-050	2

REV.	DATE	DESCRIPTION
2	9/30/92	INC. DCN ISI-SK-050-1 FOR DCR 91-0011
1	9-20-90	ISSUED FOR SECOND 10 YEAR INSERVICE INSPECTION INTERVAL

BY	CHK	ENGR	ENGR SUPV	ENG MGR
JFS				

"INITIALS ON FILE"

DB DATE: 08-29-92 DFN=OS1:[55,7]ISISK050.DGN

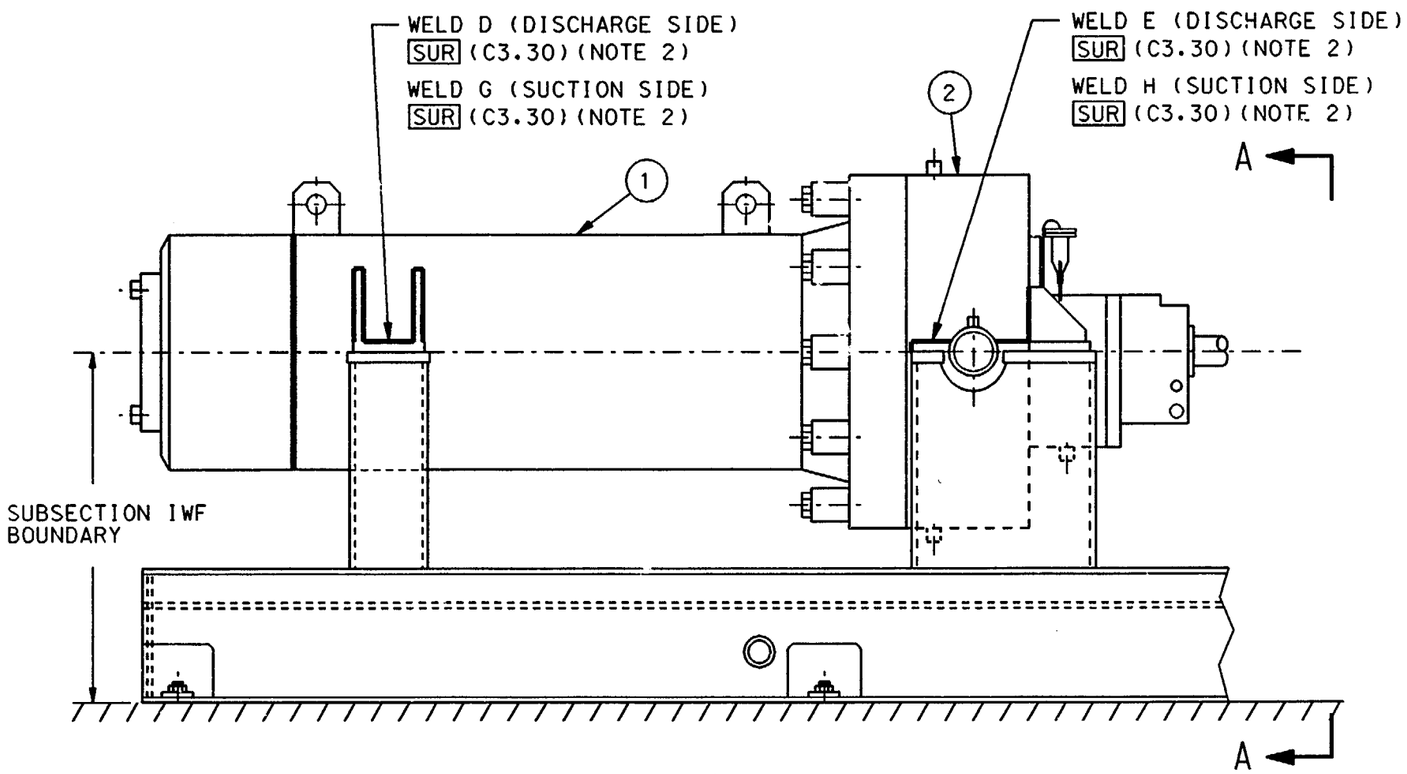

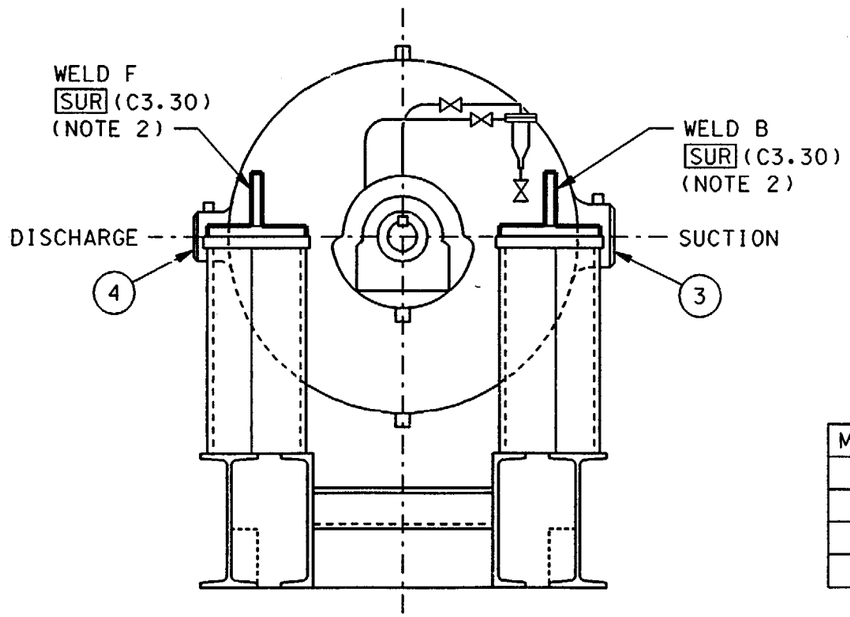

SECTION A-A

MARK NO.	DESCRIPTION
1	BARREL CASING ASSEMBLY
2	CASING HEAD
3	6" DIA. SUCTION NOZZLE
4	4" DIA. DISCHARGE NOZZLE

LEGEND:

SUR - SURFACE EXAMINATION

NOTES:

1. THIS DRAWING IS APPLICABLE TO HIGH PRESSURE INJECTION PUMPS 1-1 (P58-1) AND 1-2 (P58-2).
2. DELETED. (2)
3. UNLESS OTHERWISE SPECIFIED, ALL EXAMINATIONS ARE PERFORMED ON HIGH PRESSURE INJECTION PUMP 1-1 (P58-1).
4. THE BOLTING DETAILS, STUD HOLE LOCATIONS AND THE PRESSURE RETAINING WELDS REQUIRING EXAMINATION ARE SHOWN ON DRAWING ISI-SK-052.
5. THE MARK NUMBERS SHOWN ARE FOR INSERVICE INSPECTION ONLY.
6. A VT-3 EXAMINATION SHALL BE PERFORMED ON THE SUPPORTS FOR HIGH PRESSURE INJECTION PUMP 1-1 (P58-1). THE VT-3 EXAMINATION SHALL BE PERFORMED FROM EACH BOLTED CONNECTION TO THE BUILDING STRUCTURE TO THE CONTACT SURFACE OF THE SIX INTEGRAL ATTACHMENTS. THE ASME SECTION XI ITEM NUMBER IS F1.40. (2)

REFERENCE DRAWINGS:

1. B & W CANADA 642157 OUTLINE ARRANGEMENT (TED #7749-M-518-23)
2. B & W CANADA 643065 SECTIONAL ARRANGEMENT (TED #7749-M-518-25)

SCALE N.T.S.	DESIGNED	DRAWN WME	DATE 5-3-89

DAVIS-BESSE NUCLEAR POWER STATION
UNIT NO. 1
THE TOLEDO EDISON COMPANY

0

HP INJECTION PUMPS 1-1 AND 1-2,
OUTLINE AND SUPPORTS

DRAWING NO.	REV.
ISI-SK-051	2

REV.	DATE	DESCRIPTION
2	8-21-00	INC DCN ISI-SK-051-2 PER DDR 00-1766
1	9/24/92	INC DCN ISI-SK-051-1 FOR DCR 91-0011
0	9/12/89	ISSUED FOR SECOND 10 YEAR INSERVICE INSPECTION INTERVAL

JOR	CHK	ENGR	ENGR SUPV	ENG MGR
SBW	"INITIALS ON FILE"	"INITIALS ON FILE"		

DB:08-01-00 DFN=J:/ISI/ISISK051.DGN

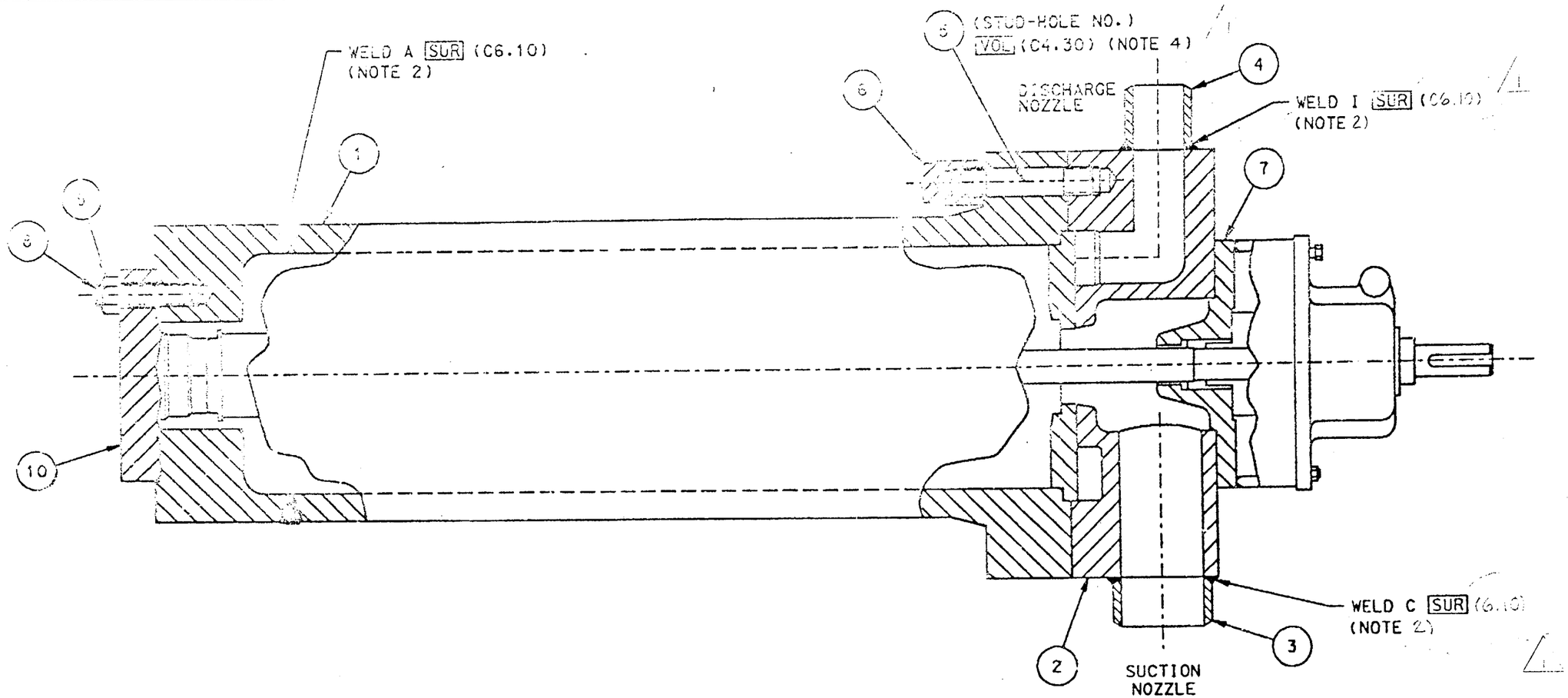

NOTES:

1. THIS DRAWING IS APPLICABLE TO HIGH PRESSURE INJECTION PUMPS 1-1 (P58-1) AND 1-2 (P58-2).
2. UNLESS OTHERWISE SPECIFIED, ALL EXAMINATIONS ARE PERFORMED ON HIGH PRESSURE INJECTION PUMP 1-1 (P58-1).
3. THE MARK NUMBERS SHOWN ARE FOR INSERVICE INSPECTION ONLY.
4. THE STUD LOCATIONS AND STUD HOLE NUMBERS ARE SHOWN IN DETAIL "A". THE EXAMINATION IDENTIFICATION NUMBER FOR STUDS CONSISTS OF THE HPI PUMP NUMBER-STUD-HOLE NUMBER (1 THRU 20). EXAMPLE: THE EXAMINATION IDENTIFICATION NUMBER FOR THE EXAMINATION OF THE HPI PUMP STUD AT LOCATION NO. 8 OF HPI PUMP NO. 1-1 IS "HP-PUMP-1-STUD-8".

LEGEND:

SUR - SURFACE EXAMINATION
VOL - VOLUMETRIC EXAMINATION

MARK NO.	DESCRIPTION
1	BARREL CASING ASSEMBLY
2	CASING HEAD
3	6" DIA. SUCTION NOZZLE
4	4" DIA. DISCHARGE NOZZLE
5	2¼" DIA. CASING STUD
6	2¼" DIA. CASING NUT
7	STUFFING BOX
8	2" DIA. CASING END COVER STUD
9	2" DIA. CASING END COVER NUT
10	CASING END COVER

REFERENCE DRAWINGS:

1. B & W CANADA 642157 OUTLINE ARRANGEMENT (TED #7749-M-517-23)
2. B & W CANADA 643065 SECTIONAL ARRANGEMENT (TED #7749-M-517-25)

SCALE N.T.S.	DESIGNED	DRAWN WME	DATE 5-3-89

DAVIS-BESSE NUCLEAR POWER STATION
UNIT NO. 1
THE TOLEDO EDISON COMPANY

Q

HP INJECTION PUMPS 1-1 AND 1-2 PRESSURE RETAINING WELDS & BOLTING DETAILS

DRAWING NO.	REV.
ISI-SK-052 SHEET 1	1

REV.	DATE	DESCRIPTION
1	9/22/92	INC. DCN 1651-SK-052 FOR DCN 91-0651
0	9/15/89	ISSUED FOR SECOND 10 YEAR INSERVICE INSPECTION INTERVAL

BY	CHK	ENGR	ENGR SUPV
JTK	SRW	JJS	
WME	RJC	ARS	

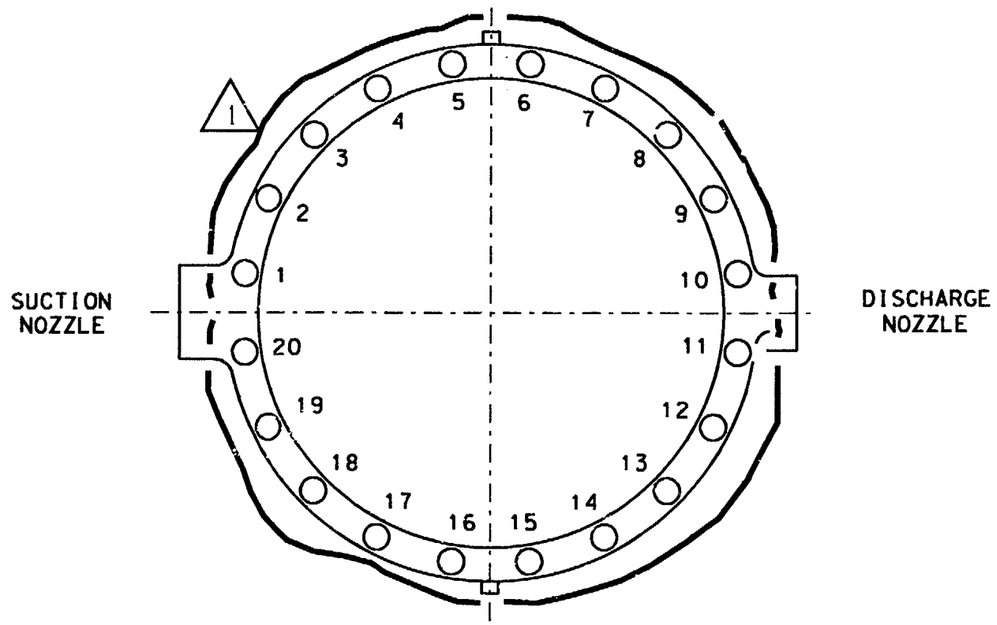

DETAIL A
STUD HOLE NUMBERS

NOTES:

1. FOR LEGEND, NOTES AND REFERENCES SEE SHEET 1 OF THIS DRAWING.

REV.	DATE	DESCRIPTION
1	7/24/92	INC DCN ISI-SK-052-2 FOR RFA 92-0232
0	9/12/89	ISSUED FOR SECOND 10 YEAR INSERVICE INSPECTION INTERVAL

BY	CHK	ENGR	ENGR SUPV	ENG MGR
JOR		JJS	"INITIALS ON FILE"	

SCALE N.T.S.	DESIGNED	DRAWN WME	DATE 5-3-89

DAVIS-BESSE NUCLEAR POWER STATION
UNIT NO. 1
THE TOLEDO EDISON COMPANY

HP INJECTION PUMPS 1-1 AND 1-2 PRESSURE RETAINING WELDS & BOLTING DETAILS

DRAWING NO.	REV.
ISI-SK-052 SHEET 2	1

DB:09-01-92 DFN=F:/ISI/ISI52SH2.DGN

I CERTIFY THAT THE IMAGE CONTAINED ON THIS FRAME WAS MADE IN

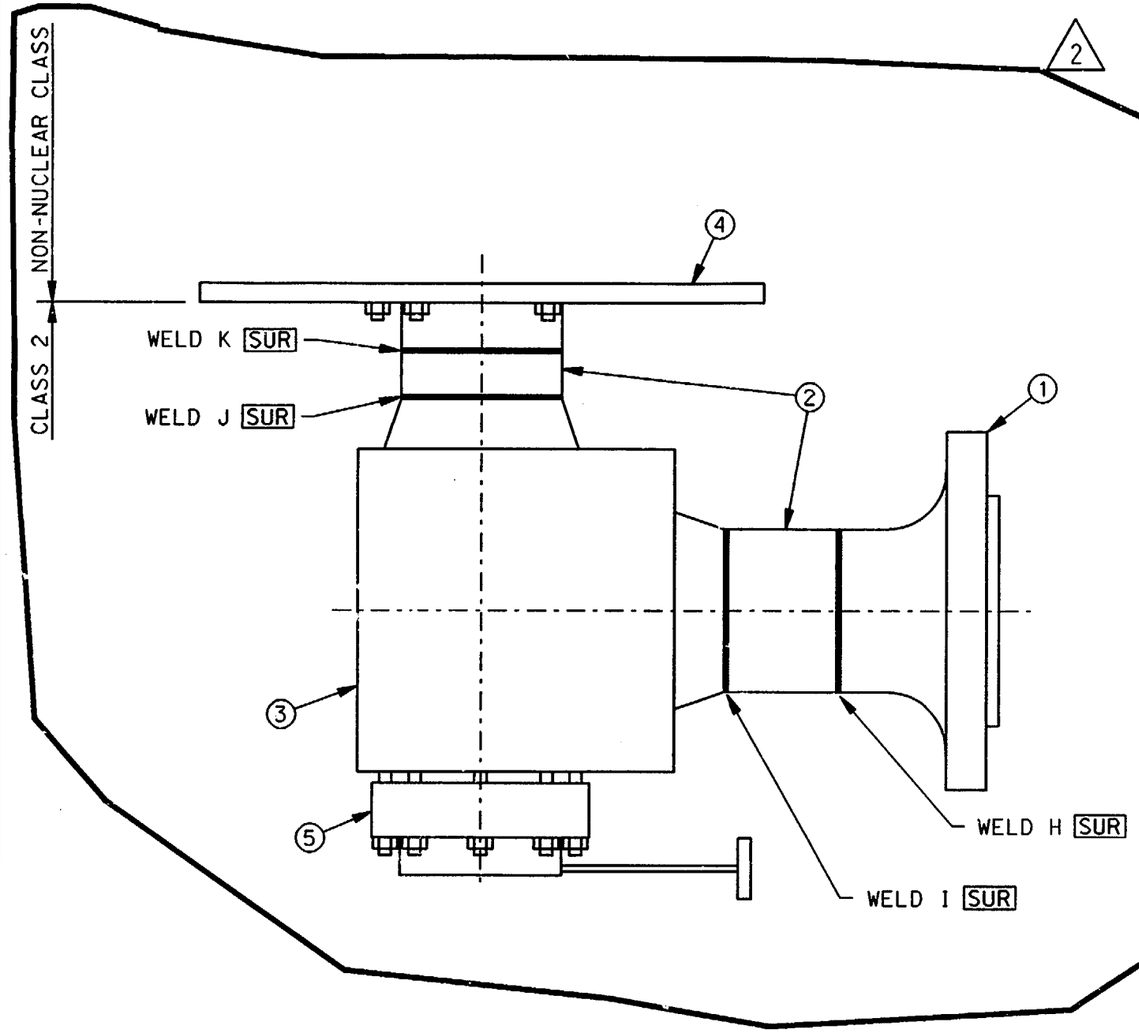

LEGEND:

SUR - SURFACE EXAMINATION

NOTES:

1. THE MARK NUMBERS SHOWN ARE FOR INSERVICE INSPECTION ONLY.

REFERENCE DRAWINGS:

CCI 114341 BODY ASSEMBLY (TED #7749-M-307-2)

CCI 114342 BODY

MARK #	DESCRIPTION
1	8" 900# FLANGE
2	8" SCH. 140 PIPE (2)
3	FORGING VALVE BODY
4	FLANCE DISCHARGE
5	FORGING VALVE BONNET

2

SCALE N.T.S.	DESIGNED	DRAWN WME	DATE 5-26-89

DAVIS-BESSE NUCLEAR POWER STATION
UNIT NO. 1
THE TOLEDO EDISON COMPANY

0

MAIN STEAM VENT VALVES
1CS11A AND 1CS11B WELDS

DRAWING NO.	REV.
ISI-SK-053	2

REV.	DATE	DESCRIPTION
2	8/21/00	INC.DCN ISI-SK-053-2 PER MOD 92-0008 SUPP.0
1	08/24/94	INC.DCN ISI-SK-053-1 PER RFA 94-0266
0	09/12/89	ISSUED FOR SECOND 10 YEAR INSERVICE INSPECTION INTERVAL

JOR	BY	CHK	ENGR	ENGR SUPV	ENG MGR
			INITIALS ON FILE	INITIALS ON FILE	

DB 08-04-00

DFN=J:/ISI/ISISK053.DGN