8,121.1

LA-UR-

Approved for public release; distribution is unlimited.

Title: Mineralogic Variation in Drill Holes USW NRG-6, NRG-7/7a, SD-7, SD-9, SD-12, and UZ#14: New Data from 1996-1997 Analyses

Delivery Mineralogical Analysis of Cuttings and Core Report

Author(s): S.J. Chipera
D.T. Vaniman
D.L. Bish
J.W. Carey

Submitted to: Yucca Mountain Site Characterization Project Office Report

Deliverable No. SP321BM4

9903020206 990223
PDR WASTE
WM-11 PDR

Los Alamos
NATIONAL LABORATORY

Los Alamos National Laboratory, an affirmative action/equal opportunity employer, is operated by the University of California for the U.S. Department of Energy under contract W-7405-ENG-36. By acceptance of this article, the publisher recognizes that the U.S. Government retains a nonexclusive, royalty-free license to publish or reproduce the published form of this contribution, or to allow others to do so, for U.S. Government purposes. Los Alamos National Laboratory requests that the publisher identify this article as work performed under the auspices of the U.S. Department of Energy. The Los Alamos National Laboratory strongly supports academic freedom and a researcher's right to publish; as an institution, however, the Laboratory does not endorse the viewpoint of a publication or guarantee its technical correctness.

Form 836 (10/96)

206

Mineralogic Variation in Drill Holes USW NRG-6, NRG-7/7a, SD-7, SD-9, SD-12, and UZ#14: New Data from 1996 - 1997 Analyses

Delivery Mineralogical Analysis of Cuttings and Core Report

S. J. Chipera, D. T. Vaniman, D. L. Bish, and J. W. Carey
Earth and Environmental Sciences Division
Los Alamos National Laboratory

Deliverable No. SP321BM4
Due Date: 05-JUN-1997

Abstract:

New quantitative X-ray diffraction (QXRD) mineralogic data have been obtained for samples from drill holes NRG-6, NRG-7/7A, SD-7, SD-9, SD-12, and UZ#14. In addition, new QXRD analyses were obtained on samples located in a strategic portion of drill hole USW H-3. These data improve our understanding of the mineral stratigraphy at Yucca Mountain, and they further constrain the 3-D Mineralogic Model of Yucca Mountain. The closer sample spacing used in these drill holes (average spacing of ~4.5 meters with closer spacing in variable areas), in contrast to the sample spacing in older drill cores (>15 meters), allows for a better understanding of the mineralogical variations and distribution with depth at Yucca Mountain. Some of the unexpected findings include the occurrence of the zeolite chabazite in the vitric zone of USW SD-7, broad overlap of vitric and zeolitic horizons (over vertical ranges up to 70 m), and the previously unrecognized importance of the bedded tuffs beneath the Calico Hills Formation as a subunit with generally more extensive zeolitization than the Calico Hills Formation in the southern part of the potential repository area. Reassessment of data from drill hole USW H-5 suggests that the zeolitization of this bedded unit occurs in the northwestern part of the repository exploration block as well. Further analyses of the same interval in USW H-3, however, have not permitted the same conclusion to be reached for the southwestern part of the repository block because of the much poorer quality of the cuttings in H-3 compared with those from H-5.

Unexpected occurrences of the zeolite stellerite in USW UZ#14 prompted the re-examination of occurrences of other minor zeolites, particularly erionite. Erionite, a carcinogenic zeolite, has been noted in the bulk rock in drill core from USW UZ#14 where it occurs in abundances of up to 34 weight percent in a 3.3 meter thick layer within the bedded unit immediately underlying the lower vitrophyre of the Topopah Spring Tuff. It is very possible that erionite exists within this bedded unit in some of the earlier drill holes at Yucca Mountain but has been overlooked due to the large sample intervals used when sampling those drill cores. UZ#14 is the second drill hole in which stellerite has been observed in the bulk rock

206

within the host rock unit, although stellerite has been observed to line fractures in numerous other drill cores at Yucca Mountain.

X-ray fluorescence (XRF) chemical data for drill holes USW SD-7, 9, and 12 show that the zeolitic horizons provide a >10 million year record of retardation of Sr transport, although the data also show that simplistic models of one-dimensional downward flow in the unsaturated zone (UZ) are inadequate. Complex interstratification of zeolites and glass, with highly variable profiles between drill cores, point to remaining problems in constructing detailed mineral stratigraphies. However, the new data in this report provide important information for constructing bounding models of zeolite stratigraphy for transport calculations.

I. INTRODUCTION

Yucca Mountain, located in southwestern Nevada, is being investigated to determine its suitability to host the first high-level nuclear waste repository in the United States (Fig. 1). The studies of Yucca Mountain and the surrounding area are part of the Yucca Mountain Site Characterization Project, directed by the Yucca Mountain Site Characterization Office (YMSCO) of the U.S. Department of Energy, Nevada Operations Office. In order to provide a sound basis for performance modeling (*e.g.*, radionuclide transport and thermal response models), it is important to understand the mineral content and distribution within the mountain. Bish and Chipera (1989) compiled a summary of mineral distributions with depth for drill holes at Yucca Mountain that had been analyzed by X-ray diffraction (XRD). However, their results were based on data from drill holes that were not drilled under today's quality assurance (QA) program and the drill holes were sampled at greater spacing than currently practiced. Drill hole UE-25 UZ#16 was one of the first holes drilled under the present QA program, and it provided the first core obtained by dry drilling, using air (Chipera *et al.*, 1995b). The close spacing used in UE-25 UZ#16 sampling was designed to examine textural/lithologic subunits to determine whether there are relations between mineralogic and textural/lithologic features in the rock. The close spacing yielded some valuable and unexpected results, including the presence of the zeolite stellerite in bulk-rock samples of the devitrified Topopah Spring Tuff where it had only been observed previously in fractures. In addition, thin zeolitic beds were identified that would have been missed by the past larger sample spacing. Cumulatively, these thin zeolitic beds intercalated with vitric material may be of particular significance in performance modeling for Yucca Mountain. Figure 1 shows the locations of the drill holes that have been analyzed at Yucca Mountain along with their QA-status. The analyses included in this report help to fill in gaps between analyzed drill holes and provide quality data with which the non-QA data may be compared.

A previous report entitled "Preliminary Three-Dimensional Model of Yucca Mountain" (Chipera *et al.*, 1997) was formulated using older non-Q data, data from UE-25 UZ#16, and data from analyzed portions of USW SD-7, 9, and 12 (Chipera *et al.*, 1996). The present study

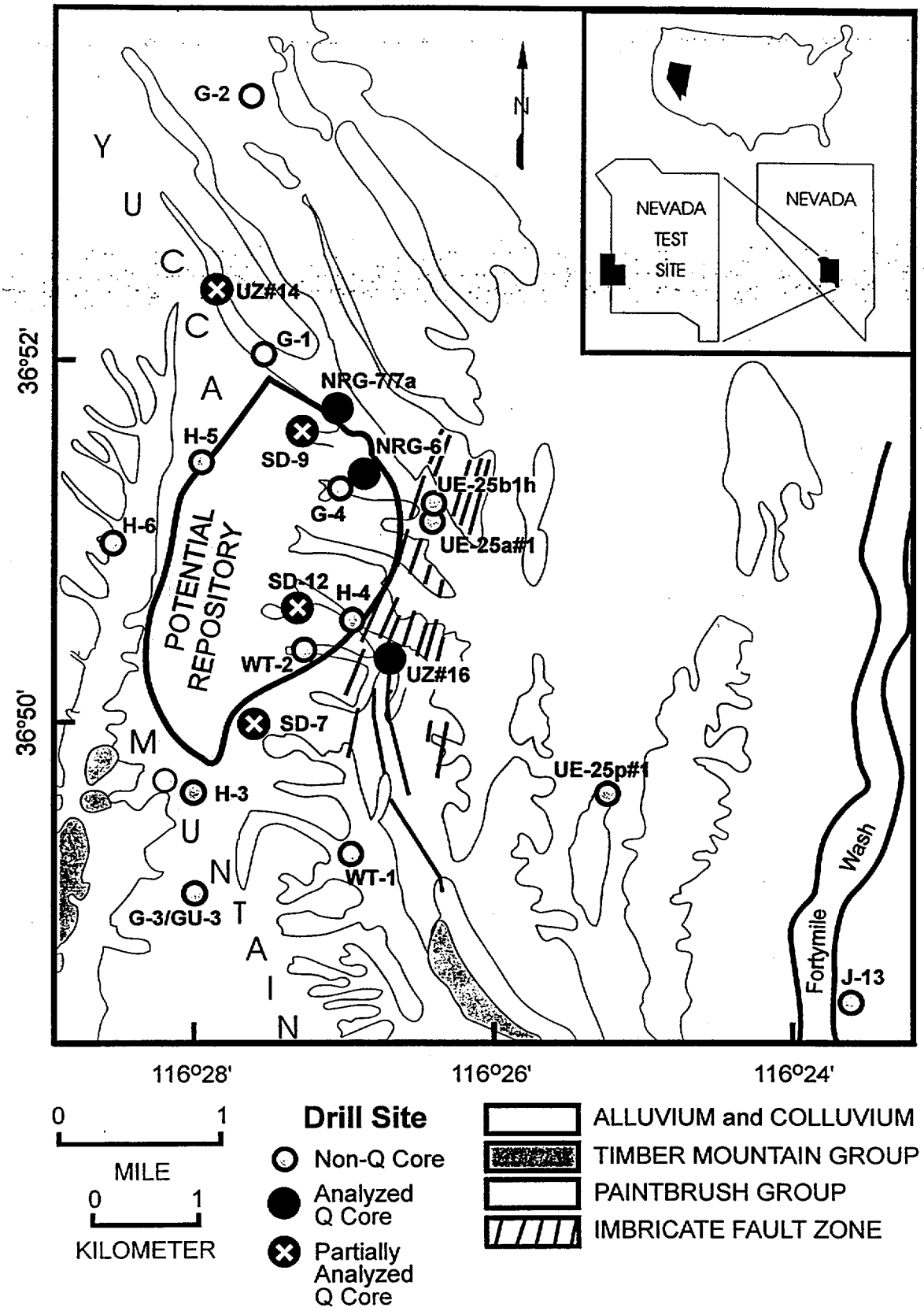

Figure 1: Map of Yucca Mountain showing the locations of the drill holes mentioned in the text.

provides additional data from deeper units (to total depth, T.D.) in SD-7, 9, and 12 as well as new data for the Topopah Spring Tuff in SD-7 and SD-12. Because of the time and funding constraints, complete analysis of the Topopah Spring Tuff in SD-12 was not possible. However, the unanalyzed section may be completed as a part of future studies to better understand hazardous mineral distributions. Complete analyses from surface to T.D. are also now available for NRG-6 and NRG-7/7A, along with new data for USW UZ#14 to 432 m depth. These new data will be used to revise and update the 3-D Mineralogic Model of Yucca Mountain. The need for a complete and accurate 3-D Mineralogic Model of Yucca Mountain, based on a representative areal sample distribution, is driven by several concerns arising from site characterization. For example, despite the Project's long-standing concept of the role of stacked zeolite horizons as barriers to radionuclide migration between the potential repository horizon and the water table and direct evidence for some form of zeolitic barrier above the water table in every drill hole examined to date (*e.g.*, Vaniman *et al.*, 1984), there continues to be a common misconception that "holes" exist at Yucca Mountain where no zeolitic barriers occur between the potential repository and the water table. This misconception is unsupported by available data. Furthermore, the view that significant zeolite holes exist demonstrates the critical need for an accurate quantitative 3-D model of mineral distributions, widely accessible to Project participants, for accurate visualization of site properties. The utility of the new mineralogic data presented in this report, coupled with the 3-D Mineralogic Model, is also evident in addressing at least four other aspects of site characterization and assessment:

1) Linkages between mineralogy and fluid flow

Mineralogy is often a very important parameter in defining the hydrologic behavior of rock masses. For example, vitric nonwelded tuffs and zeolitized tuffs can have very similar porosities but different hydraulic conductivities (Loeven, 1993). Likewise, smectite intervals, even in thin occurrences, can give aquitard characteristics to porous intervals that would otherwise be very transmissive when saturated. The discovery of broadly overlapped vitric and zeolitic horizons emphasizes the importance of understanding the detailed mineralogy beneath the repository horizon.

2) Linkages between mineralogy and waste transport

Zeolitic horizons have long been and still remain an important factor in models of radionuclide transport at Yucca Mountain. A 3-D transport modeling capability has already been developed using a basic 3-D model of zeolite horizons that was not based on the Integrated Site Model (Robinson *et al.*, 1995). In this earlier study, zeolite horizons were defined based on assumed arbitrary cutoffs of zeolite percentage. The existing Mineralogic Model incorporates zeolite and other mineral percentages as the basic distributed property,

allowing mineral volumes to be defined as needed for specific performance studies. Data from the present study will improve the accuracy of the 3-D Mineralogic Model, facilitating more representative modeling of transport. For example, knowledge of the zeolite distribution in the broadly overlapped vitric to zeolitic transition zone is crucial to accurate transport modeling as even small volumes of zeolites are important in transport.

3) Mineral distributions and thermal stability

Hydrous minerals and water-bearing glasses can be affected by repository-induced heating and can in turn serve to moderate heat accumulation within the rock mass. Other minerals, particularly silica polymorphs, may be structurally affected or may control the aqueous silica concentrations of fluids migrating under thermal loads, resulting in silica dissolution or precipitation and rock-property modification at distal locations along the thermal gradient. The effects of thermal alteration by emplaced waste will likely be most pronounced in and just above the basal vitrophyre of the Topopah Spring Tuff, directly underlying the repository host rock. This vitrophyre is variably altered across Yucca Mountain, with devitrification-associated heulandite penetrating its highly irregular upper surface (Levy and O'Neil, 1989). Clinoptilolite and other zeolites (*e.g.,* erionite in drill hole USW UZ#14) often occur in the basal vitrophyre. In the eastern part of Yucca Mountain, the nonwelded base of the Topopah Spring Tuff and all of the underlying Calico Hills Formation are extensively zeolitized (clinoptilolite ± mordenite). In the southwestern part of Yucca Mountain, the few core samples available suggest that much of this interval is essentially vitric and unaltered. Existing data suggest an alteration front may have been associated with past rises in the static water level (SWL), but the nature of this zeolitic/vitric transition and the implications for past fluctuations in the SWL were poorly constrained until the recent analyses of core samples from within the potential repository block. The nature of the lateral and vertical transitions between zeolitized and vitric portions of the Calico Hills Formation is of fundamental importance to understanding the potential for thermal alteration or dehydration of existing zeolites and possible formation of new zeolites and/or clays from heated glass (Vaniman and Bish, 1995). Results presented in this report show that the transition zone is quite variable across Yucca Mountain, in some places spanning a depth range of over 70 m.

4) Mineral distributions and health hazards

Distributions of crystalline silica polymorphs continue to have an important impact on determining the use of respirator protection by tunnel boring machine operators and others working during mining and drilling operations in the Exploratory Studies Facility (ESF). The Topopah Spring Tuff has highly variable ratios of the crystalline silica polymorphs and an

accurate knowledge of the distributions of these minerals in three dimensions will help in planning for mitigation of dust inhalation hazards.

Some ESF operations, such as the East-West Drift, may extend to depths in the Topopah Spring Tuff at the bottom of the lower non-lithophysal zone (Tptpnl) and below, where erionite may be encountered. Erionite is a natural fibrous zeolite that occurs in the rocks at Yucca Mountain and is listed as a known human carcinogen by recognized international agencies such as the International Agency for Research on Cancer (IARC). No safe exposure levels have been established for erionite and no federal health and safety standards are in place that specifically regulate exposure to erionite (aside from 29CFR1910, the Hazard Communications Standard). Although U.S. regulatory agencies do not specifically address erionite, its morphology and IARC classification strongly suggest that it be treated no less carefully than asbestos. Furthermore, Nevada state OSHA regulations specify that if an international agency such as IARC lists a material as carcinogenic, the material shall be considered by Nevada OSHA to be carcinogenic and shall be treated as such.

Erionite was first confirmed by XRD in Yucca Mountain tuffs in a fracture from drill hole UE-25a#1 at 395-m depth (1296.2 feet) on February 14, 1985 (Bish and Vaniman, 1985). A description of the techniques specially developed shortly thereafter at Los Alamos to detect very small quantities of erionite in mixtures with other minerals is reported in Bish and Chipera (1987; 1991) and Bish *et al.* (1995). When erionite was first identified in tuffs at Yucca Mountain, its health effects were not well known, and erionite was not listed by regulatory agencies. Since that time, YMSCP scientists have learned considerably more about the occurrence and distribution of erionite at Yucca Mountain and about the health effects of erionite.

Our ongoing effort to determine the distribution of erionite using specially developed X-ray diffraction techniques has proved very successful. All documented occurrences of erionite at Yucca Mountain are consistent and show that erionite, when it occurs, is restricted to the transition zone in the lower Topopah Spring Tuff where alteration occurs a few meters above, within, and a few meters below the basal vitrophyre. Erionite has not been identified outside this zone at Yucca Mountain. However, it is important to note that until recently it was believed that erionite occurrence at Yucca Mountain was restricted to fractures above the vitrophyre, and the high concentrations of erionite in the matrix below the vitrophyre in USW UZ#14 were totally unexpected. It is also important to note that restricted sampling intervals used in the past on the YMSCP, with samples often taken at greater than 15-m (50-ft) intervals, do not allow the Project to conclude that erionite does *not* occur in earlier sampled drill holes.

II. METHODS

The mineralogy of drill core samples from drill holes USW NRG-6, NRG-7/7a, SD-7, SD-9, SD-12, and UZ#14, as well as selected cuttings from USW H-3, was determined by quantitative XRD methods. Sampling of the cores was performed with a maximum sample spacing of ~8 m (26 ft) and an average sample spacing of 4.7 m (15.4 ft). Smaller spacing was often used when significant textural/stratigraphic features were observed in the core. This sample spacing is much closer than in our previous studies of non-QA core, in which the average spacing between samples was typically >15 m and often >40 m (Bish and Chipera, 1989).

To prepare the samples for X-ray powder diffraction (XRD) analyses, a small portion of each sample (~0.8 g) was mixed with 1.0-μm corundum (Al_2O_3) internal standard in the ratio 80% sample to 20% corundum by weight. Each sample was then ground under acetone or alcohol in an automatic Brinkmann Micro-Rapid mill (fitted with an agate mortar and pestle) for at least 10 minutes. This produced a sample with an average particle size of less than 5 μm and ensured thorough mixing of sample and internal standard. The fine particle size is necessary to ensure adequate particle statistics and to reduce primary extinction and other sample-related effects (Klug and Alexander, 1974; Bish and Reynolds, 1989). The adequacy of grinding times and techniques has been confirmed utilizing a Horiba CAPA-500 automatic particle-size-distribution analyzer calibrated with Duke Scientific glass microspheres.

All diffraction patterns were obtained on a Siemens D500 X-ray powder diffractometer using CuKα radiation, incident- and diffracted-beam Soller slits, and a Kevex Si(Li) solid-state detector from at least 2–50°2θ, using 0.02° steps, and counting for at least 2s/step. Mineral identification was accomplished by comparing observed patterns with patterns of pure standards, published patterns from the Joint Committee on Powder Diffraction Standards (JCPDS 1986), or calculated mineral patterns obtained from the program POWD10 (Smith *et al.*, 1982).

The quantitative XRD analyses for this report employed the internal standard or "matrix-flushing" method of Chung (1974) using synthetic 1.0-μm corundum as the internal standard (Bish and Chipera, 1988; 1989; Chipera and Bish, 1995; and Chipera *et al.*, 1995b). This method requires that reference intensity ratios (RIRs) be determined before sample analysis. It is important to note that these methods of data collection and analysis are not conducive to identifying phases present below ~0.5 wt %, and potentially important trace phases may be present in the samples. X-ray diffraction analyses for the detection of low levels of erionite use procedures specially developed at Los Alamos for the YMSCP. For these analyses, all sample mounts were sufficiently long to accept the X-ray beam fully at the lowest angle of interest, ~6° 2θ. X-ray runs were conducted twice on each sample. Samples were first examined from 2° to 36° 2θ, with a step size of 0.02° and count times of at least 2 s per step, to

characterize the total mineralogy. They were then run from at least 6° to 9° 2θ, with a step size of 0.02° and count times of between 180 and 999 s per step to improve the peak-to-background ratio in the region of the major erionite X-ray reflection (100) at about 7.67° 2θ. All samples were analyzed in either an ethylene-glycol or 100% RH water-saturated atmosphere to expand any smectite in the samples. This treatment shifts the smectite 001 reflection to lower 2θ values away from the position of the strongest erionite reflection.

Bish and Chipera (1987; 1991) showed that erionite coexisting with clinoptilolite can be detected in amounts below 0.05 wt% using XRD. They prepared numerous mixtures of erionite in clinoptilolite ranging from 0.05 to 20.0 wt% erionite. Mixtures containing less than 0.05 wt% (500 ppm) erionite were not prepared because of uncertainties involved in weighing and homogenizing very small amounts of erionite with large amounts of clinoptilolite. It was found that erionite in relatively pure clinoptilolite can be readily detected down to 0.25 wt% using average run conditions, and amounts down to 0.05 wt% can be detected using long count-time runs. Because of diffraction from smectite, the detection limits of erionite in clinoptilolite are significantly worse when smectite is present, but glycolation of the sample allows increased resolution of the clinoptilolite/erionite reflections by shifting the smectite peaks to lower 2θ values. In samples that do not contain clinoptilolite or smectite, the limit of detection for erionite is below 0.05%, down to as low as 150 ppm for some samples.

Lower-limit-of-detection calculations were conducted on samples from USW SD-7. A peak is considered observed if it is at least three times the standard deviation (σ_b) of the background intensity at a given 2θ position, where the standard deviation of background intensity is the square root of the background counts accumulated in *t* seconds (C_b). The lower limit of detection (LLD) in intensity is then $3\sigma_b$ or $3\sqrt{C_b}$. For the analyses used in this paper, a minimum detectable integrated intensity (MDII) for erionite was calculated by assuming a triangular peak profile with a full-width at half-maximum (FWHM) of ~0.14°2θ (typical measured FWHM for erionite). The MDII is equal to the minimum detectable peak intensity times the FWHM or $3\sigma_b * 0.14$. The MDII is then compared with the intensity obtained for a known abundance of erionite in an erionite-clinoptilolite standard mixture (*e.g.*, 2.5 wt% erionite in 97.5 wt% clinoptilolite) to determine the LLD of erionite in that sample. The LLD for a given sample is a function of the count time per 2θ-step and of the background counts, which vary significantly primarily due to the presence or absence of smectite. Typical LLDs vary from 150 to 350 ppm for samples analyzed at 999 s/step, and from 300 to 500 ppm for samples analyzed at 360 s/step.

Chemical data for a subset of USW SD-7, 9, and 12 samples were obtained from splits of the alumina-crucible or tungsten-carbide shatterbox-ground powders that were used for XRD analysis. Chemical compositions were determined using a Rigaku 3064 X-ray fluorescence

spectrometer (XRF) and fundamental parameters matrix correction procedures (User's Guide to XRF-11 Software for Fundamental Parameters, Criss Software, Inc.). Samples were prepared by drying the powder for 4 hours at 110°C, equilibrating at ambient conditions for 24 hours, and then weighing sample and lithium tetraborate flux in a 1:9 ratio into a graphite crucible. Samples were fused for 35 minutes in a 1150°C furnace. Loss on ignition (LOI) was determined by heating an aliquot of the dried powder for 30 minutes at 1000°C. No attempt was made to distinguish between H_2O^+ and H_2O^- or any other volatile components in the samples. Major and minor elements analyzed included Si, Ti, Al, Fe, Mn, Mg, Ca, Na, K, and P. In addition, the trace elements Ba, Rb, Sr, V, Cr, Zn, Y, Zr, Nb, and Ni were also analyzed.

Chemical data on vitrophyre, smectite, and erionite-bearing samples from USW UZ#14 were obtained through instrumental neutron activation analysis (INAA). Samples were analyzed at the trace-element geochemistry laboratory of Washington University, St. Louis, MO, using methods described in Korotev (1991).

III. RESULTS and DISCUSSION

Quantitative XRD results for drill holes USW NRG-6, NRG-7/7a, SD-7, SD-9, SD-12, and UZ#14 are portrayed graphically in Figures 2-9, and are included in tabular form in Appendices I-VII. Data for USW NRG-6 were collected previously, but they were not published or incorporated into the 3-D Mineralogic Model of Yucca Mountain. These data are included in this report because NRG-6 provides Q-level core and adds valuable information on the composition of the Topopah Spring Tuff and overlying nonwelded Paintbrush Group units at the north end of the exploration block.

Drill holes NRG-6 and NRG-7/7a are shallow, but they provide excellent sample coverage within upper Paintbrush tuffs and, in particular, within the highly variable Paintbrush Group units between the Tiva Canyon and Topopah Spring Tuffs. Interestingly, in contrast to the lower vitric zone in the Topopah Spring Tuff, little zeolite was observed within these upper units. The alteration product of the glass in the upper Paintbrush tuffs appears to be primarily smectite which occurs throughout the vitric zone but is especially abundant at both the top and bottom margins. The lack of zeolite contrasts with the same vitric unit in UE-25 UZ#16 where a 1-meter thick bed containing ~18 wt% heulandite was observed close to the base of this unit (Chipera *et al.*, 1995b). Although the average sampling interval used was greater than 1 meter, a bedded zeolite unit would not have been missed since the sampling methodology in these holes involved sampling every significant observable textural and/or stratigraphic feature to determine if it was also reflected in the mineralogy.

The transition from glassy to zeolitic tuff below the potential repository horizon is well defined by our analyses of the USW SD-7, SD-9, SD-12, and UZ#14 samples. This transition

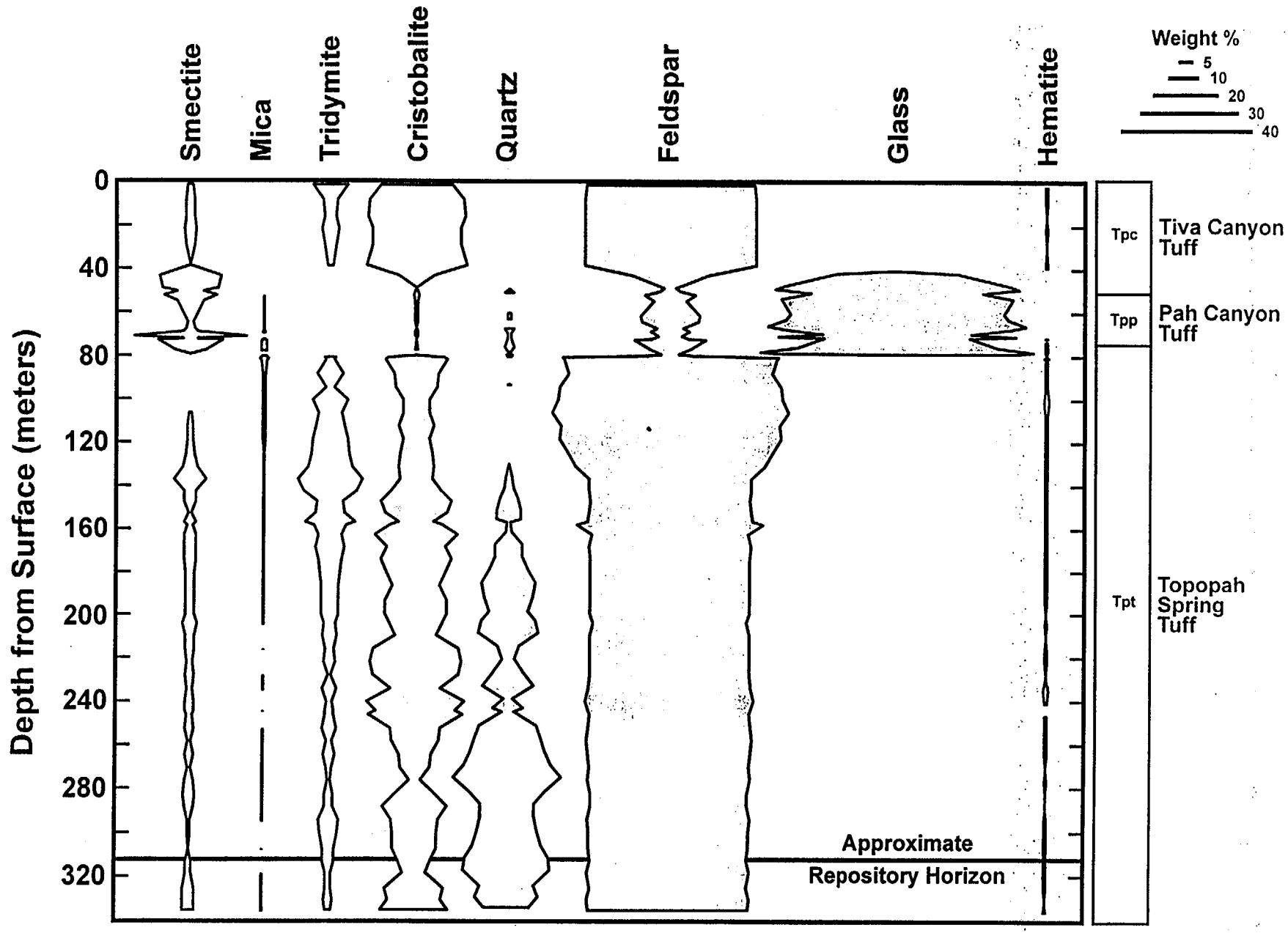

Figure 2: Results of quantitative XRD analyses showing abundances of minerals and glass for drill hole USW NRG-6.

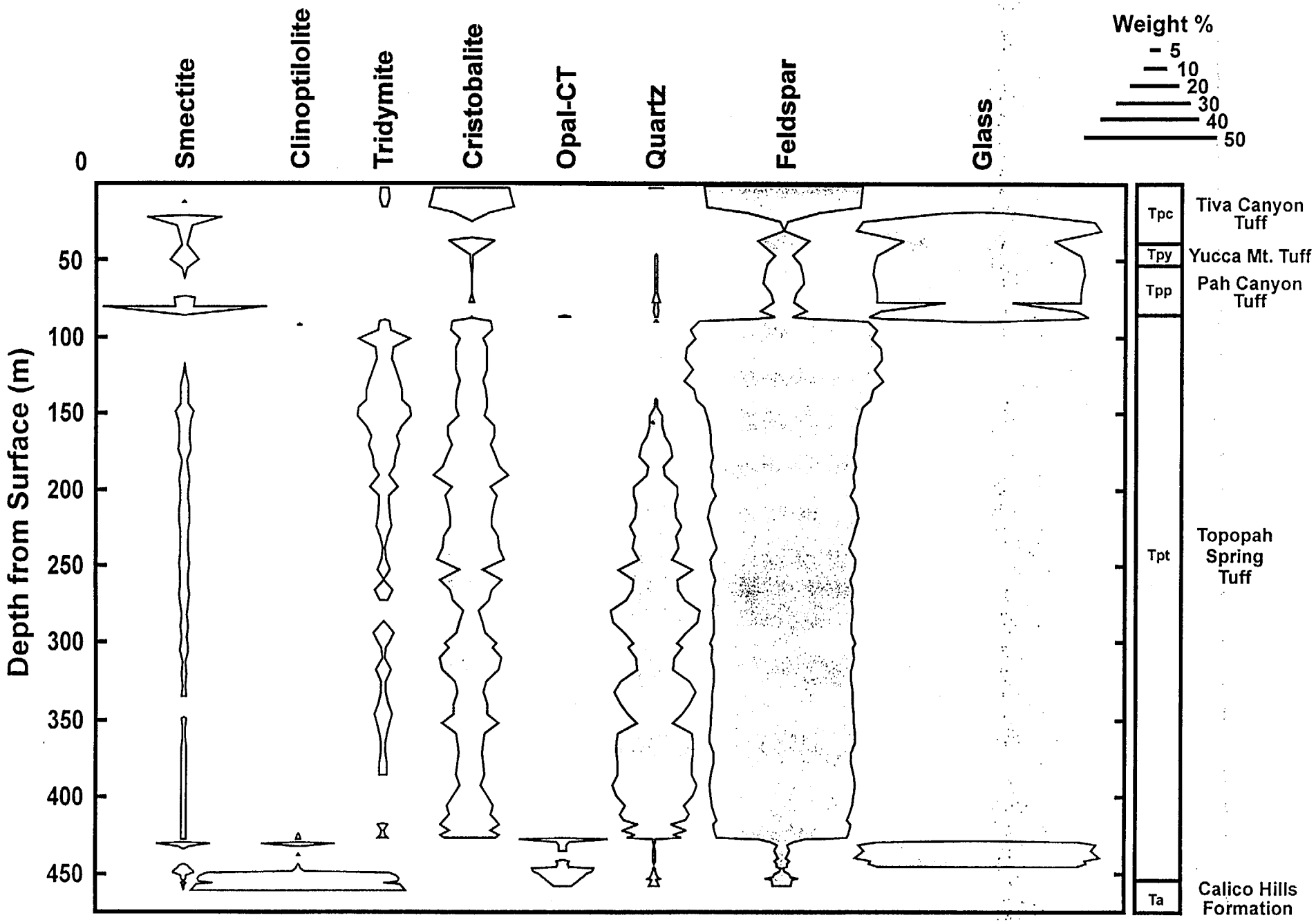

Figure 3: Results of quantitative XRD analyses showing abundances of minerals and glass for drill hole USW NRG-7/7a.

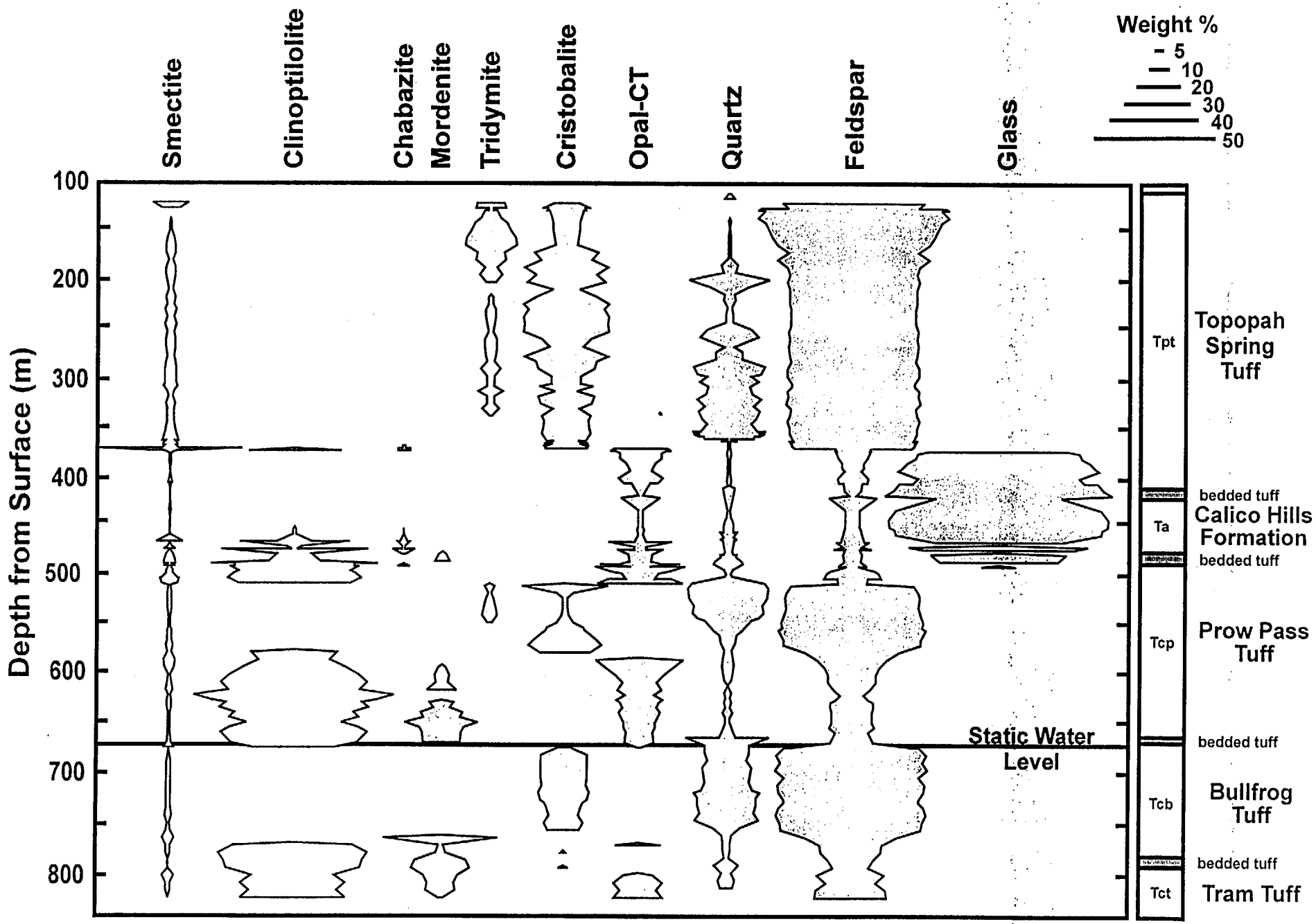

Figure 4: Results of quantitative XRD analyses showing abundances of minerals and glass for drill hole USW SD-7.

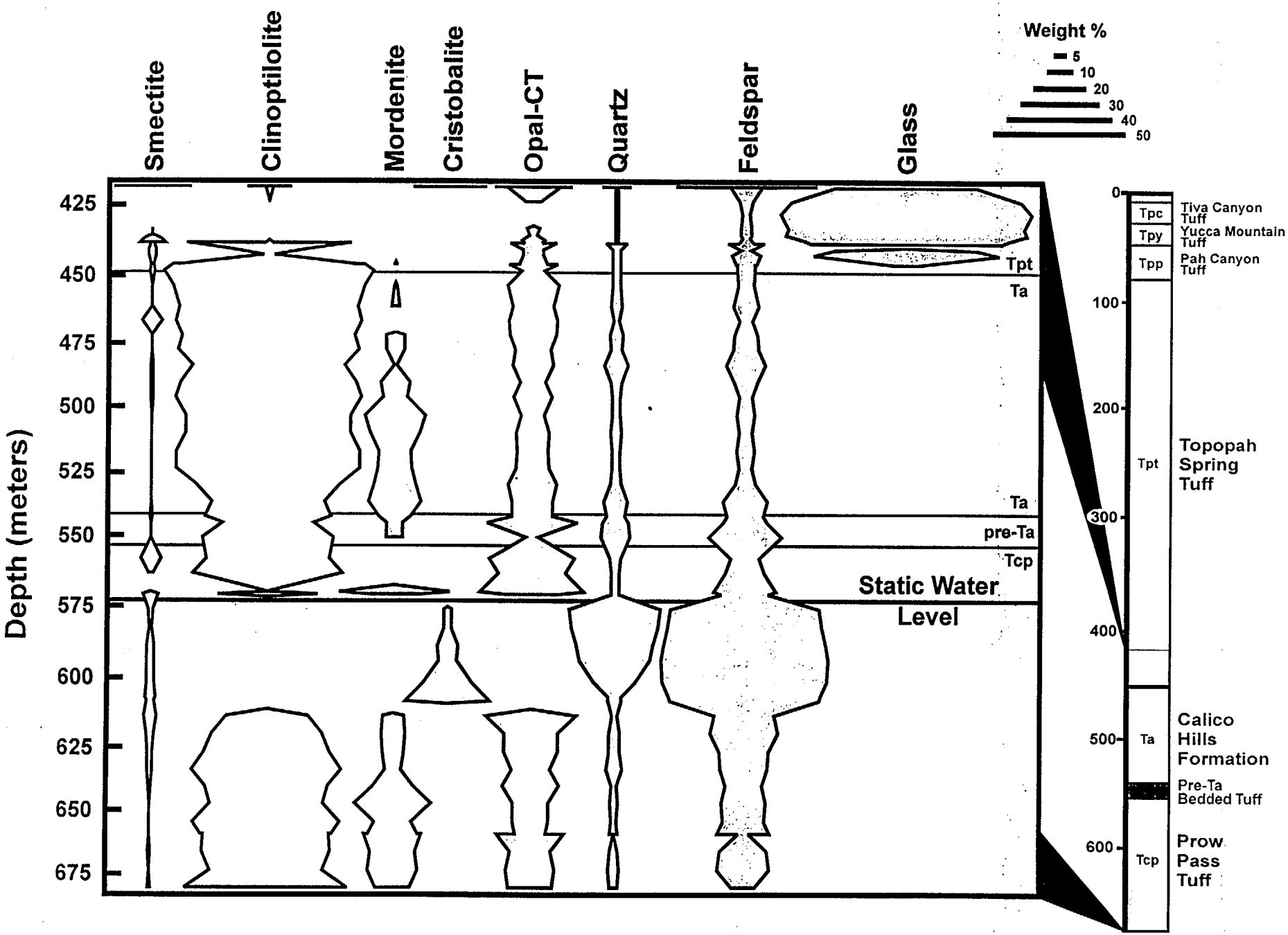

Figure 5: Results of quantitative XRD analyses showing abundances of minerals and glass for drill hole USW SD-9.

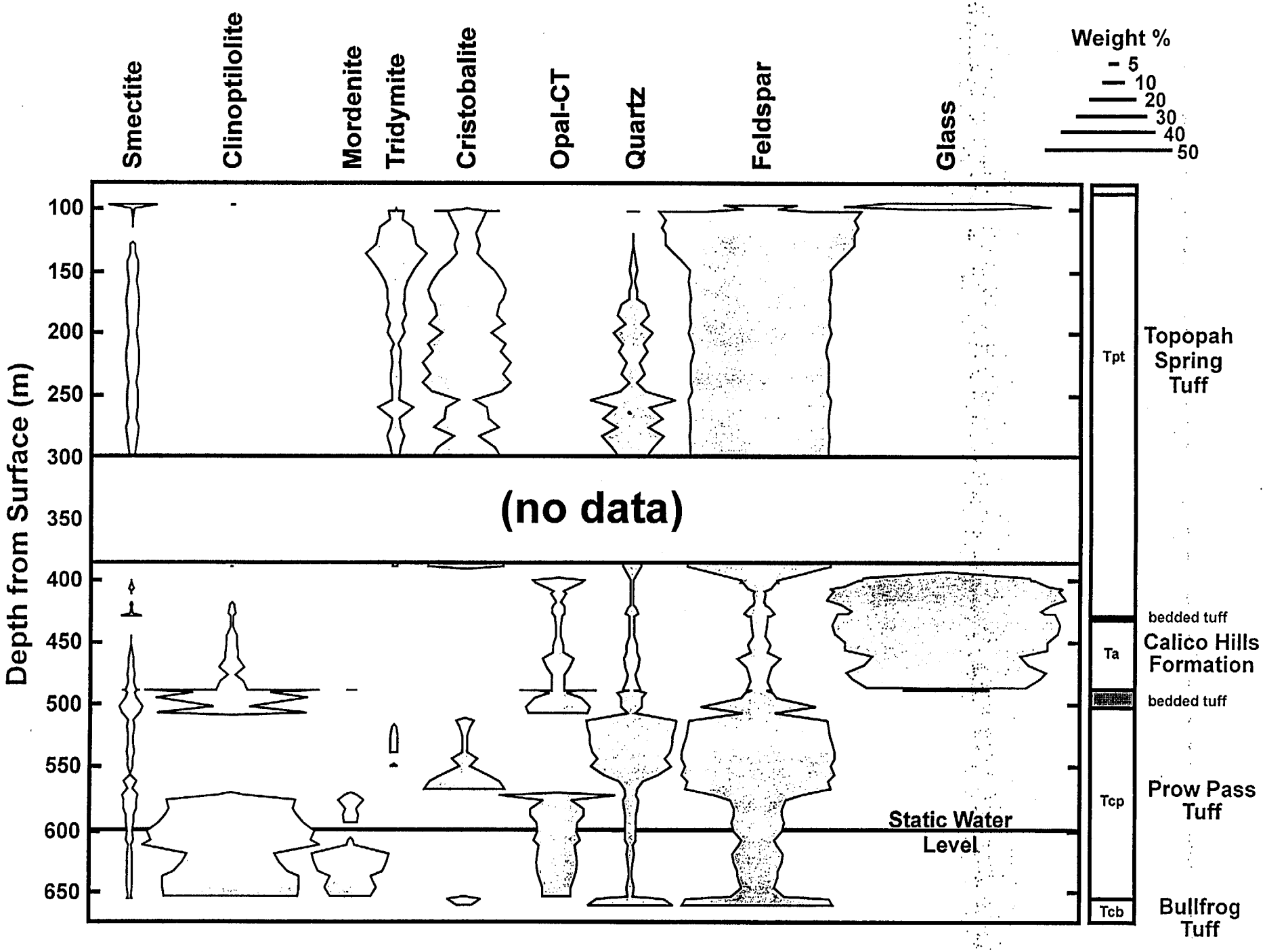

Figure 6: Results of quantitative XRD analyses showing abundances of minerals and glass for drill hole USW SD-12.

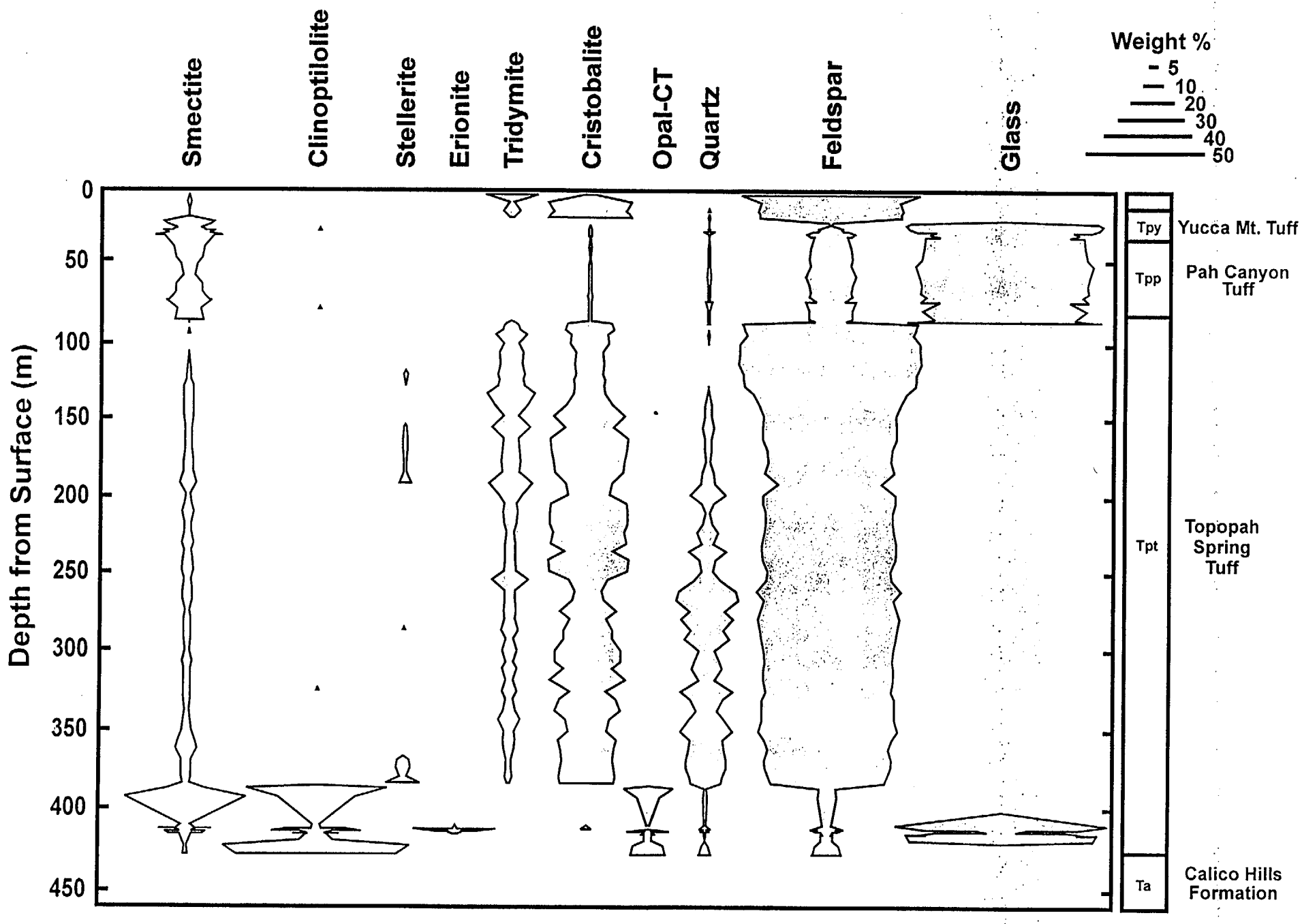

Figure 7: Results of quantitative XRD analyses showing abundances of minerals and glass for drill hole USW UZ#14.

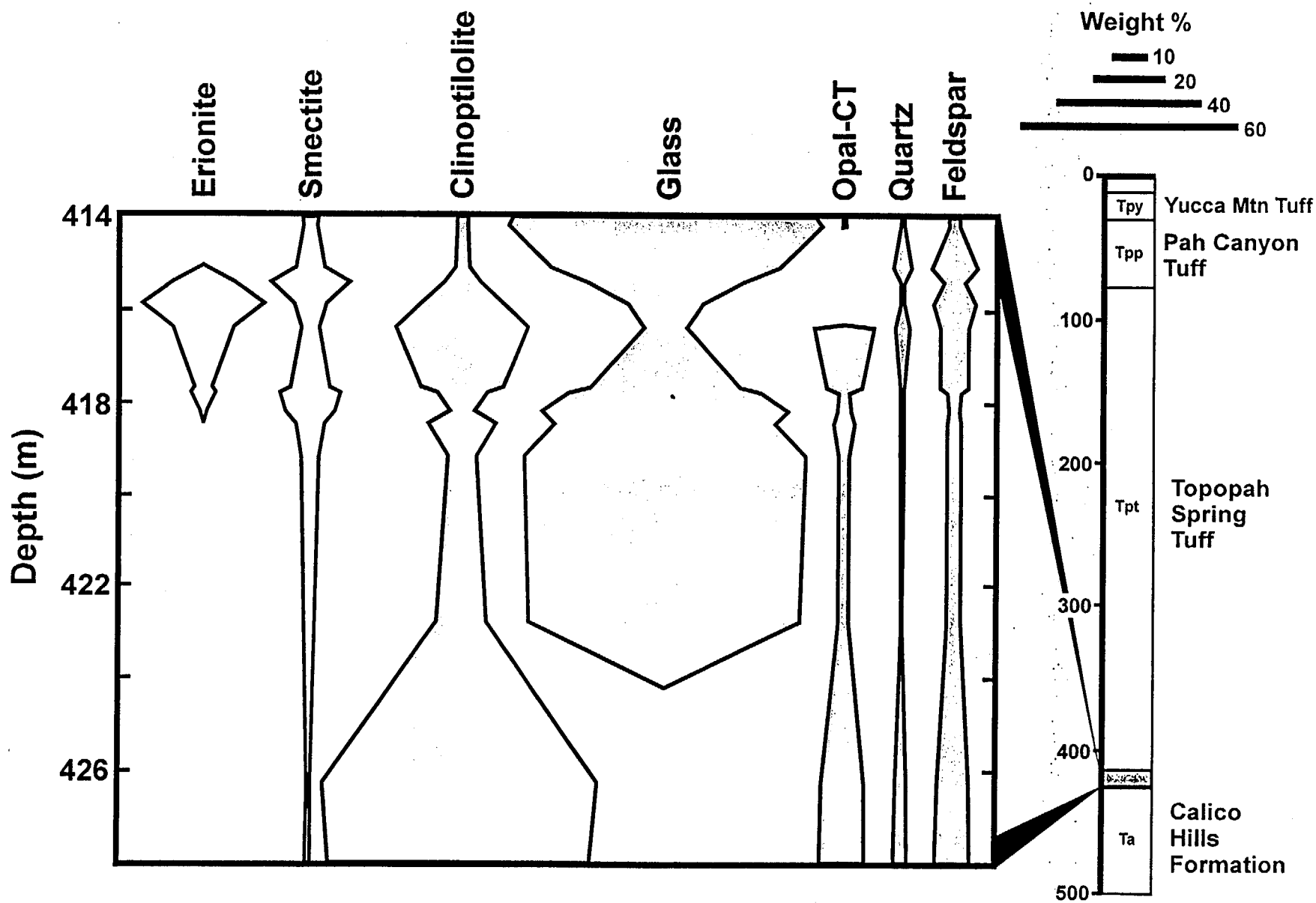

Figure 8: Results of quantitative XRD analyses showing with greater detail the distribution of zeolites and glass through the vitric-to-zeolitic portion of drill hole USW UZ#14.

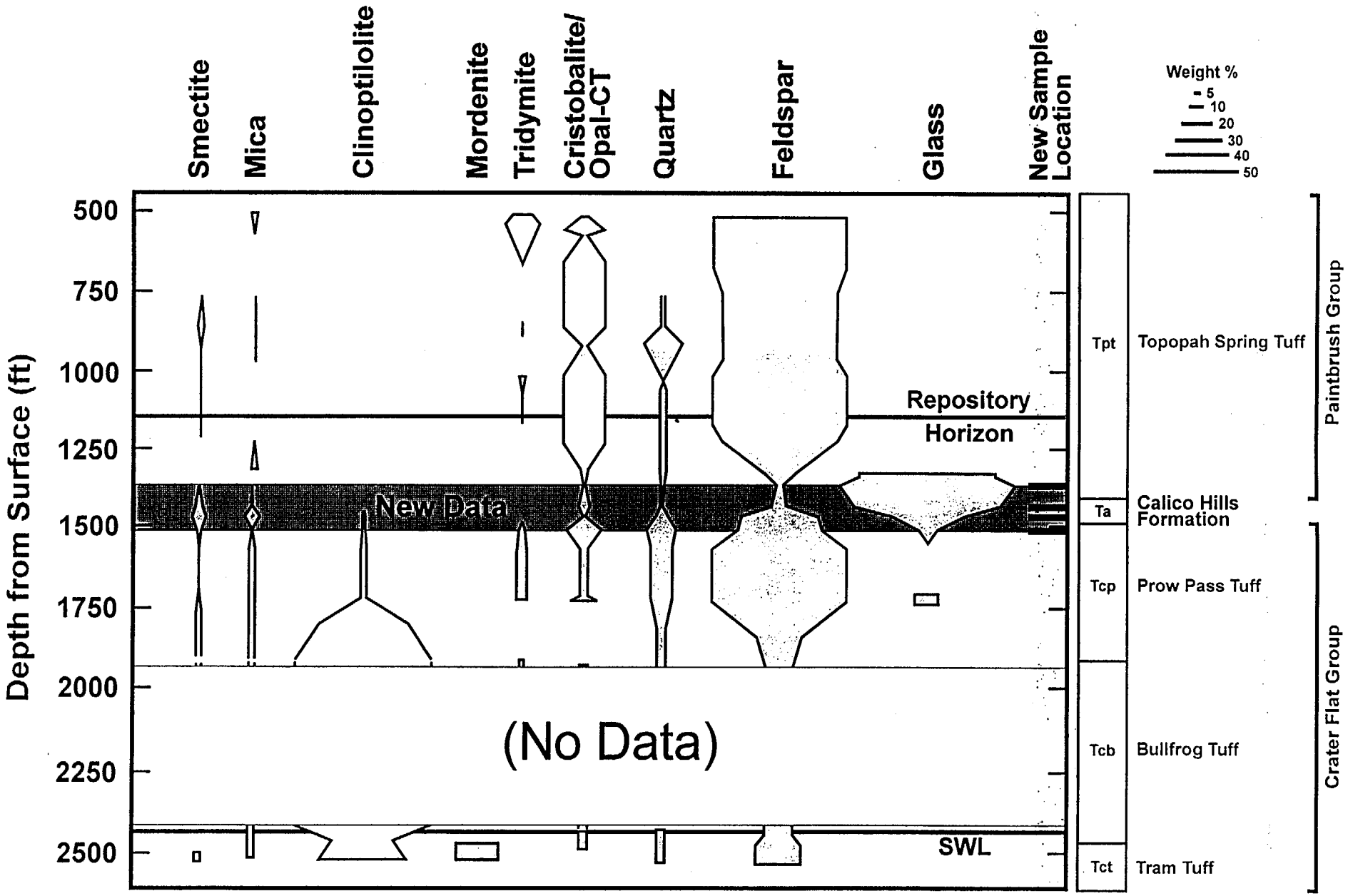

Figure 9: Results of quantitative XRD analyses showing abundances of minerals and glass for drill hole USW H-3.

occurs in the vitric nonwelded base of the Topopah Spring Tuff in USW SD-9 and in a widely dispersed interval ranging from near the bottom of the vitric nonwelded base of the Topopah Spring Tuff throughout the Calico Hills Formation in USW SD-12 and USW SD-7. The data corroborate the sequence seen in other drill holes at Yucca Mountain, with the added benefit that the very close sample spacing in these drill holes provides a much more detailed picture of the variability in the transition from glass to zeolite. The top of the Topopah Spring Tuff vitrophyre shows the same thin horizon of significant smectite and clinoptilolite as in other drill holes (*e.g.*, UE-25 UZ#16). The bottom of the vitrophyre in USW SD-9 is just 2 m above the top of the prominent zeolitic sequence. However, the close sample spacing across the vitric-to-zeolitic transition in all four of these cores shows complex interlayering of vitric and zeolite-altered horizons within the base of the vitric nonwelded portions of the basal Topopah Spring Tuff (USW SD-9 and UZ#14) and/or the Calico Hills Formation (USW SD-7 and SD-12), emphasizing the importance of obtaining closely spaced samples in horizons near the host rock.

Results for four additional USW H-3 cuttings samples, encompassing the lower Topopah Spring vitrophyre, the Calico Hills Formation, and the transition zone at the very top of the Prow Pass formation, are superimposed on the older data in Figure 9 and in Appendix VII. These four samples help to fill in the ~70-meter gap in USW H-3 across the critical vitric-to-zeolitic transition zone within the Calico Hills Formation where the Project presently has no data. Unfortunately, very little mineralogical data exist for this transition in the western portion of Yucca Mountain. The samples were carefully hand-picked from cuttings to select what appeared to be the first occurrences of distinctive alteration lithologies going down-hole. The principal goal of this study was to determine whether the bedded tuff at the base of the Calico Hills Formation (Tacbt) was zeolitized in USW H-3 as it is in USW H-5. Only traces of zeolite were found, but other mineralogical anomalies, such as the very high feldspar content, indicate that the cuttings selected are not truly representative of the bulk rock. Unfortunately, the cuttings in USW H-3 are essentially sand-sized throughout this interval, they are heavily contaminated with materials from higher in the hole, and some sample sizes are small (<0.2 g). Thus their utility in determining mineral stratigraphy is severely compromised.

Figure 10 shows glass and total zeolite abundance diagrams for the three SD drill holes. For comparison among the three drill holes, sample depths have been normalized to elevation (meters above sea level). As can be seen from Figure 10, stratigraphy "rises" to the south whereas the static water level (SWL) drops to the south. The Calico Hills Formation has been completely zeolitized (*i.e.*, there is no remnant glass) in the northernmost hole (USW SD-9). Here the first vestige of the major unsaturated zone (UZ) zeolitic horizon at 436.4 m depth (865.9 m elevation) and the deepest preservation of nonwelded glass at 444.3 m depth (858.0 m elevation) are separated by only ~8 m. The dispersion of this transition is much greater in

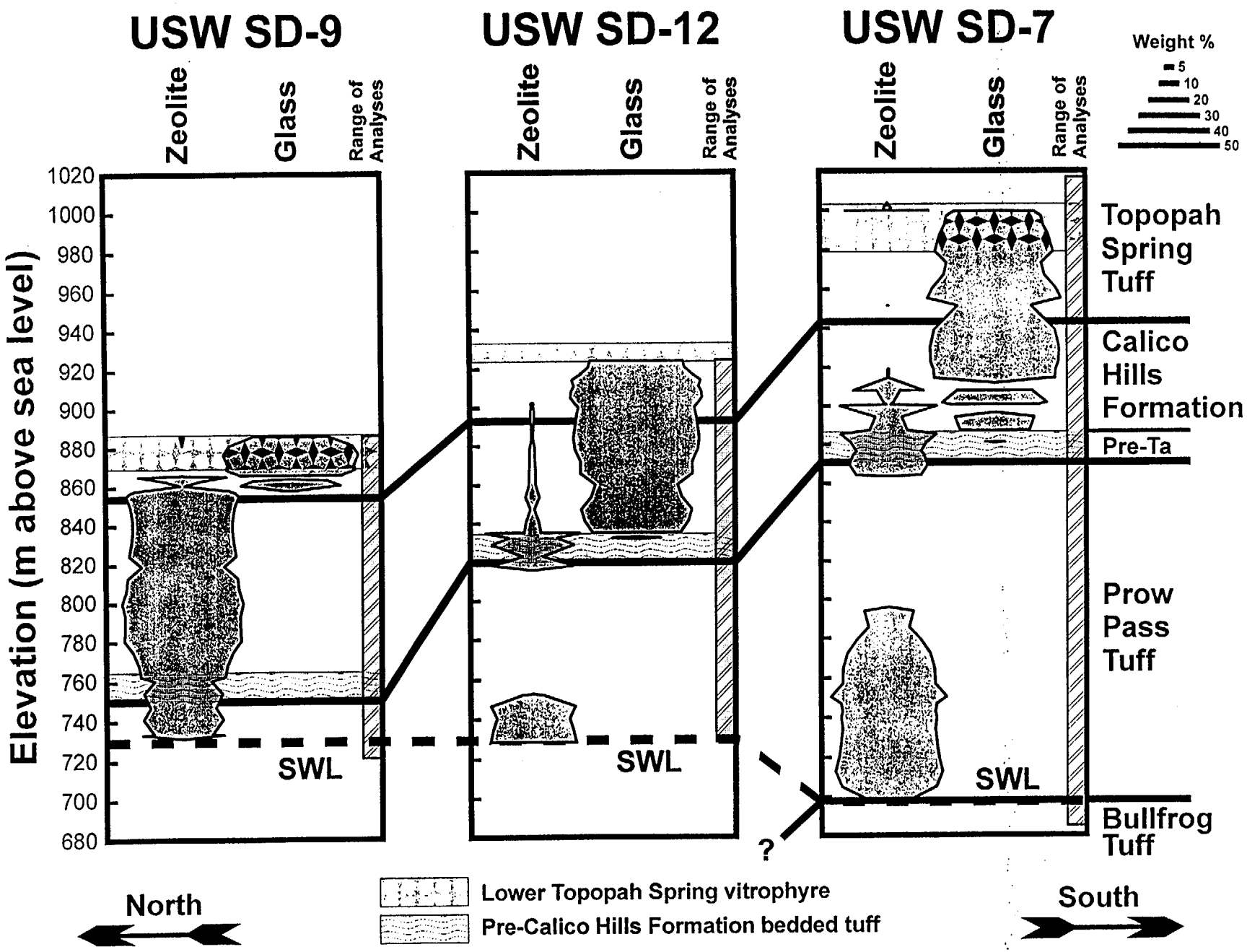

Figure 10: Comparison of the vitric to zeolitic transition in drill holes USW SD-7, 9, and 12. Drill hole data have been normalized to elevation (m above sea level) to facilite the comparisons.

the southern holes. The first evidence of the major UZ zeolitic horizon in USW SD-12 occurs at 421.0 m depth (902.7 m elevation) and the deepest preservation of nonwelded glass is at 490.8 m depth (dispersion of the vitric-to-zeolitic horizon across ~70 m). Disregarding an outlier of 1% clinoptilolite at 411.7 m depth, the first intersection of the major UZ zeolitic horizon in USW SD-7 occurs at 444.2 m depth (918.9 m elevation) and the loss of nonwelded glass occurs at 482.0 m depth (dispersion of the vitric-to-zeolitic transition across ~38 m). If the outlier of clinoptilolite at 411.7 m in USW SD-7 is included, the dispersion of the vitric-to-zeolitic transition in this core is ~70 m, comparable to the range in USW SD-12 (also ~70 m). However, the isolation of this outlier from the major zeolitized portion makes it doubtful that there is any genetic relation between it and the major zeolitized interval of the Calico Hills Formation in this core.

Of particular interest in the vitric interval is the observation of the zeolite mineral chabazite in concentrations of up to 9 wt% in 13 samples from USW SD-7 and in one sample from USW SD-12. The occurrence of chabazite in the bulk rock is somewhat unusual since it previously has been found only in limited abundances in fractures associated with vitric zones. Moreover, these earlier-discovered fracture occurrences are all below the static water level (Carlos *et al.*, 1995a,b). Chabazite may exist in the bulk rock in other drill holes, but it may not have been discovered previously because of the limited sampling that was conducted in the vitric regions where chabazite would occur (sample spacings in previous studies were typically greater than 8 m in this interval, whereas present sample spacings average ~4 m in this interval). Chabazite in USW SD-7 occurs both at the top of the lower Topopah Spring Tuff vitrophyre and within the nonwelded Calico Hills Formation. The occurrence of chabazite provides information on the geochemical conditions that existed during its formation. Chipera *et al.* (1995a) used representative chemical formulas and estimated thermodynamic data to model the conditions under which the various zeolite species at Yucca Mountain formed. Chemical analyses of modern Yucca Mountain water using present-day silica activities were found to plot within the predicted clinoptilolite stability field. A stability field for chabazite occurred only for groundwater compositions that were significantly more potassic than present Yucca Mountain groundwater. Decreases in aqueous silica and sodium activities and increases in temperature also enhance the stability field for chabazite.

A fracture below the vitric zone from USW SD-12 at 500.4 m (1641.7 ft) depth was found to be filled with smectite. This smectite was further characterized by XRD and was identified as an interstratified dioctahedral illite/smectite composed of ~40% collapsed layers. Characterization was conducted by comparing the X-ray pattern obtained from an oriented ethylene-glycol-solvated sample mount with patterns calculated using the computer program NEWMOD (Reynolds and Reynolds, 1987). Although the interstratification in the smectite could be interpreted to suggest that it was formed at somewhat elevated temperature, the lack of

ordering between the collapsed and expanded layers indicates that this smectite formed at temperatures below ~100°C (Hower and Altaner, 1983).

Generalized mineral distribution at Yucca Mountain

Clinoptilolite and mordenite are the most abundant zeolites at Yucca Mountain. Major continuous intervals of clinoptilolite occur in all drill holes, generally in association with nonwelded tuff intervals from ~100-150 m above the water table to ~500 m below. Heulandite is fairly common at Yucca Mountain but is lumped with clinoptilolite in XRD analyses since the two minerals are isostructural. Mordenite often occurs along with clinoptilolite but is less abundant in drill holes farther to the south and is virtually absent in bulk-rock samples from drill hole USW GU-3/G-3. The zeolite analcime occurs as a prograde alteration product at greater depths, but the depths of analcime occurrence are so great that little interaction with waste is likely. The locations of zeolitic intervals are strongly controlled by tuff stratigraphy; zeolites formed from the glasses of nonwelded and bedded intervals which reside between those portions of the tuffs that devitrified to form feldspars and silica minerals soon after emplacement. These zeolitic intervals and their effects on Np transport have been modeled recently by Robinson *et al.* (1995).

Until recently, chabazite was known only as a rare zeolite at Yucca Mountain. However, samples from the Calico Hills Formation in USW SD-7 contain up to 9 wt% chabazite in this zeolitized interval, occurring principally in a clinoptilolite + chabazite zone of ~14 m thickness, above a clinoptilolite + mordenite zone (Chipera *et al.*, 1996). In addition to clinoptilolite, mordenite, analcime, and minor chabazite, restricted occurrences of a few other zeolites have been found at Yucca Mountain. Stellerite is common in fractures of the Topopah Spring Tuff and is particularly common in both fractures and matrix of the Topopah Spring Tuff in drill holes UE-25 UZ#16 and USW UZ#14. Phillipsite is a rare zeolite at Yucca Mountain and has been found only in the zone of alteration above the water table at the top of the lower vitrophyre of the Topopah Spring Tuff (Carlos *et al.*, 1991; 1995a; 1995b). Until recently, erionite was also believed to occur only in fractures at the top of the Topopah Spring Tuff lower vitrophyre until it was found in significant quantities (up to 34%) in a 3-m thick sequence in the bulk rock underlying the Topopah Spring Tuff lower vitrophyre in drill core USW UZ#14.

Smectite is ubiquitous in low abundances throughout Yucca Mountain. XRD analyses show that smectite occurs in virtually all analyzed samples, typically in amounts <2%. Smectite + illite abundances rise at depth, particularly in the northern and central portions of the block where a fossil geothermal system occurs. Above the water table there are two mappable zones of up to 75% smectite in the Paintbrush Tuff, one within the vitric nonwelded section above the Topopah Spring Tuff and one at the top of the basal vitrophyre of the Topopah Spring Tuff. These smectites typically have non-expandable illite contents of 10-20%. Well beneath the

water table (depths >1000 m), rocks affected by the ancient (~10.7 Ma) geothermal system contain abundant smectite/illite but with a much higher illite content (~80-90%: Bish, 1989). Illitic clays have a higher layer charge than smectites, reducing their effective cation-exchange capacity. However, the illitic clays occur at such great depths that they are of little importance for transport modeling at Yucca Mountain.

The common silica polymorphs at Yucca Mountain include quartz, cristobalite, and tridymite. In addition, opal-CT is usually found in association with sorptive zeolites. Tridymite occurs primarily above the potential repository horizon, particularly in those parts of the Topopah Spring and Tiva Canyon Tuffs where vapor-phase crystallization is common. This distribution, as well as the common formation of tridymite in lithophysal cavities, is evidence of the vapor-phase growth of tridymite. Pseudomorphs of quartz after tridymite in deep fractures and cavities provide evidence of the instability of tridymite under low-temperature aqueous conditions. Tridymite occurrences have been interpreted as a possible limit on past maximum rises in the water table at Yucca Mountain (Levy, 1991). Cristobalite is not restricted to vapor-phase formation; instead, it is found in virtually every sample above the water table and in significant quantities in several zones just beneath the water table. The preservation of cristobalite in rocks above the water table is in accord with studies showing that an aqueous fluid is necessary for the rapid recrystallization of cristobalite to quartz (Ernst and Calvert, 1969). Opal-CT occurs both above and below the water table. Opal-CT and cristobalite are combined as one mineral group in the preliminary model because they are often almost indistinguishable in XRD analyses. Furthermore, these phases are the least stable of the silica minerals and generate comparable silica activities in aqueous solution.

Distribution of Erionite

Of the 6 drill holes analyzed in this report, erionite was only detected in drill core USW UZ#14. Table 1 lists the samples specifically analyzed for erionite along with the abundances detected. All documented occurrences of erionite at Yucca Mountain are consistent and show that erionite occurrence is restricted to the transition zone in the lower Topopah Spring Tuff where alteration occurs a few meters above, within, and a few meters below the basal vitrophyre. Erionite analyses therefore tended to focus on this region. However, additional analyses were conducted for samples from UZ#14 in the upper Paintbrush vitric zone which appears to be an environment similar to those in which erionite has been found previously in the lower Topopah Spring Tuff vitrophyre (altered glass, with significant smectite and trace zeolite). No erionite, however, was observed in these additional UZ#14 samples.

Figure 8 shows the distribution of erionite determined by XRD in samples from drill hole USW UZ#14. Erionite occurs in abundances of up to 34 weight percent over a limited depth

Table 1. Samples specifically examined for erionite.

Sample	Type	Wt% Erionite	Calculated Detection Limit
USW SD-7			
1156.7/1156.9	Bulk	---	185 ppm
1169.9/1170.0	Bulk	---	185 ppm
1175.1/1175.4	Fract.	---	N.D.
1179.5/1179.7	Bulk	---	185 ppm
1181.6/1182.0	Bulk	---	285 ppm
1187.0/1187.1	Bulk	---	220 ppm
1191.1/1191.3	Bulk	---	280 ppm
1245.5/1246.0	Fract.	---	N.D.
1278.6/1278.7	Bulk	---	245 ppm
1338.5/1338.7	Bulk	---	245 ppm
1391.0/1391.2	Bulk	---	220 ppm
USW SD-9			
1431.7/1431.9	Bulk	---	N.D.
1434.4/1434.5	Bulk	---	N.D.
1440.1/1440.2	Bulk	---	N.D.
1447.8/1448.0	Bulk	---	N.D.
1457.2/1457.6	Bulk	---	N.D.
1460.6/1460.8	Bulk	---	N.D.
1465.9/1466.1	Bulk	---	N.D.
2140.5/2140.9	Bulk	---	N.D.
USW SD-12			
1309.3/1309.5	Bulk	---	N.D.
1320.6/1321.0	Bulk	---	N.D.
1333.2/1333.4	Bulk	---	N.D.
1342.1/1342.2	Bulk	---	N.D.
1351.9/1352.2	Bulk	---	N.D.
1361.9/1362.0	Bulk	---	N.D.
1371.4/1371.5	Bulk	---	N.D.
1381.1/1381.3	Bulk	---	N.D.
1388.0/1388.2	Bulk	---	N.D.
1399.2/1399.3	Bulk	---	N.D.
USW NRG-7/7a			
1411.5/1411.8	Bulk	---	N.D.
1416.4/1416.8	Bulk	---	N.D.
1451.2/1451.3	Bulk	---	N.D.
1459.3/1459.5	Bulk	---	N.D.
1463.5/1464.0	Bulk	---	N.D.
1470.0/1470.2	Bulk	---	N.D.
1475.0/1475.4	Bulk	---	N.D.
1481.1/1481.2	Bulk	---	N.D.
1485.5/1485.7	Bulk	---	N.D.
1492.0/1492.2	Bulk	---	N.D.
1495.9/1496.2	Bulk	---	N.D.
USW UZ#14			
Upper Paintbrush Vitric Zone			
71.0/71.4	Bulk	---	N.D.
261.6/262.0	Bulk	---	N.D.
278.3/278.5	Bulk	---	N.D.
286.4/286.7	Bulk	---	N.D.
Lower Topopah Spring Tuff Vitrophyre			
1277.4/1277.7	Bulk	---	N.D.
1298.6/1299.1	Bulk	---	N.D.
1358.6/1358.8	Bulk	---	N.D.
1361.8/1361.9	Bulk	2 ± 1	
1362.6/1363.0	Bulk	17 ± 3	
1364.4/1364.6	Bulk	34 ± 7	
1365.8/1366.0	Bulk	17 ± 3	
1370.1/1370.3	Bulk	5 ± 1	
1370.3/1370.7	Bulk	7 ± 1	
1371.8/1372.0	Bulk	2 ± 1	
1372.7/1372.9	Bulk	~0.26	
1375.2/1375.4	Bulk	---	N.D.
1387.0/1387.2	Bulk	---	N.D.
1398.5/1398.7	Bulk	---	N.D.
1414.9/1415.1	Bulk	---	N.D.
1417.6/1417.8	Bulk	---	N.D.

--- = not detected
N.D. = not determined

range of approximately 3.4 m (11.1 ft), from 414.0 to 418.2 m depth (1361.8 to 1372.9 ft), in the moderately welded subzone beneath the Topopah Spring Tuff lower vitrophyre. The data in this zone show that erionite abundance is greatest at the top of this zone, decreasing significantly toward the bottom of the zone. Whether this distribution has a genetic implication is unknown, although the greater abundance at the top of the zone may be related to the proximity to the glassy vitrophyre. Visual examination of this interval indicates that it begins at the bottom of the densely welded lower vitrophyre (about 415.1 m, 1362 ft depth) and is most prominently developed in the moderately welded subzone (Tptpv2), dying out in the nonwelded vitric tuffs (about 418.5 m, 1373 ft depth) at the base of the Topopah Spring Tuff. Beneath this, a more typical vitric-to-clinoptilolite transition occurs. Textural relations in the USW UZ#14 samples suggest that erionite formed after clinoptilolite. Comparable alteration, producing such large amounts of erionite, has not been observed in any other drill core. However, it is important to note that the restricted sampling intervals used in the past on the YMSCP, with samples often taken at 15-m (50-ft) intervals, do not allow the Project to conclude that erionite does *not* occur in earlier sampled drill holes.

The INAA data for erionite-bearing samples from USW UZ#14 can be compared with data for the unaltered vitrophyre to determine the geochemical environment and the extent of chemical exchange involved in zeolitization. The alkali and alkaline-earth elements have proven particularly useful in estimating the amount of exchange involved in zeolitization. Table 2 summarizes these data for the vitrophyre, for a smectite concentrate, and for the erionite-rich tuff beneath the vitrophyre. The smectite sample is a relatively pure mineral separate from sample LANL#1876p1 (396.0-m depth). The mineral compositions of the vitrophyre sample (LANL#1714p1, 88% glass, 414.2-m depth) and of the erionite-rich sample (LANL#1715p1, 34% erionite, 415.9-m depth) are listed in Appendix VI.

Table 2: Alkali and alkaline-earth elements in samples from USW UZ#14.

	Na_2O %	K_2O %	CaO %	Rb ppm	Sr ppm	Cs ppm	Ba ppm
vitrophyre	2.81	4.60	0.80	177	136	11	45
smectite	0.13	0.26	2.70	22	488	19	14
erionite/ heulandite	0.70	2.13	4.20	143	625	29	43

If one assumes that the vitrophyre is a good compositional analog to the vitric tuff that altered to create the smectite- and zeolite-rich samples, the data in Table 2 indicate strong depletions of Na and moderate depletions of K in zeolites (erionite/heulandite) resulting from

alteration of glass, with associated strong Ca enrichment. Changes in Rb, Cs, and Ba are minor, but both the smectite and the zeolitic tuff are enriched in Sr. Although volume corrections for alteration will affect these trends somewhat, these corrections are minor compared with the amount of change seen in Na, K, Ca, and Sr. Figure 11 shows the chondrite-normalized lanthanide-element patterns for these three samples. Particularly notable is the absence of a Ce anomaly in the vitrophyre sample, the positive Ce anomaly in the erionite-rich sample, and the negative Ce anomaly in the smectite sample. Cerium segregates from the other lanthanide elements only under oxidizing conditions, in which Ce is 4+ and the other lanthanides are 3+. Comparable Ce anomalies have been found at the top of the Calico Hills Formation in USW SD-9, suggesting that accumulation of oxidized Ce in the upper parts of zeolitized intervals is less a function of erionite formation than it is a general feature of the upper parts of zeolitized horizons.

Chemical Analysis of the Vitric-to-Zeolitic Transition Zone in USW SD-7, 9, and 12

Whole-rock chemical data for USW SD-7, 9, and 12 samples as a function of depth are provided in Appendices VIII-X. The data in Appendices VIII-X correlate well with mineralogy. As expected, there is a direct correlation between abundant zeolite occurrences (>25% zeolites) and LOI (water). In addition, zeolites show a strong direct correlation with Ca and Mg, and an inverse correlation with Na and K. It is worth noting, however, that the relatively zeolite-poor (14% clinoptilolite) sample at 500.4 m depth in SD-12, within the zone of otherwise abundant zeolitization, is exceptionally Ca- and Mg-rich, reflecting the abundant crystalline detritus of the pre-Calico Hills Formation bedded tuff (Tacbt) rather than a high zeolite content for this sample. Thus chemical information alone can not be used to infer alteration mineralogy without corroborating XRD information.

Evidence of the bulk-rock interaction with groundwater can be seen in the Sr data. The vitric and devitrified rhyolitic tuffs contain very little Sr, but there is a strong correlation between Sr abundance and sorptive phases (especially clinoptilolite/heulandite) in certain portions of the zeolitic horizons. Figures 12-14 relate zeolite abundance to the Sr concentration across the vitric-to-zeolitic transition for drill holes USW SD-7, 9, and 12. From the data presented in Figures 12-14, it is evident that Sr has been stripped from the downward-percolating groundwater by the sorptive zeolites. This effect is particularly apparent in drill hole USW SD-12 (Figure 14). Significant concentrations of Sr occur at the three spots in Figure 12 at (A) the top of the pervasively-zeolitized but low-zeolite-abundance zone extending from the base of the Topopah Spring Tuff through the Calico Hills Formation; (B) within the high-zeolite-abundance interval of the bedded tuffs beneath the Calico Hills Formation (Tacbt); and (C) at the top of the high-zeolite-abundance zone at the bottom of the Prow Pass Tuff. In occurrences (A) and (C), it is evident that Sr has been removed from the downward-percolating groundwater

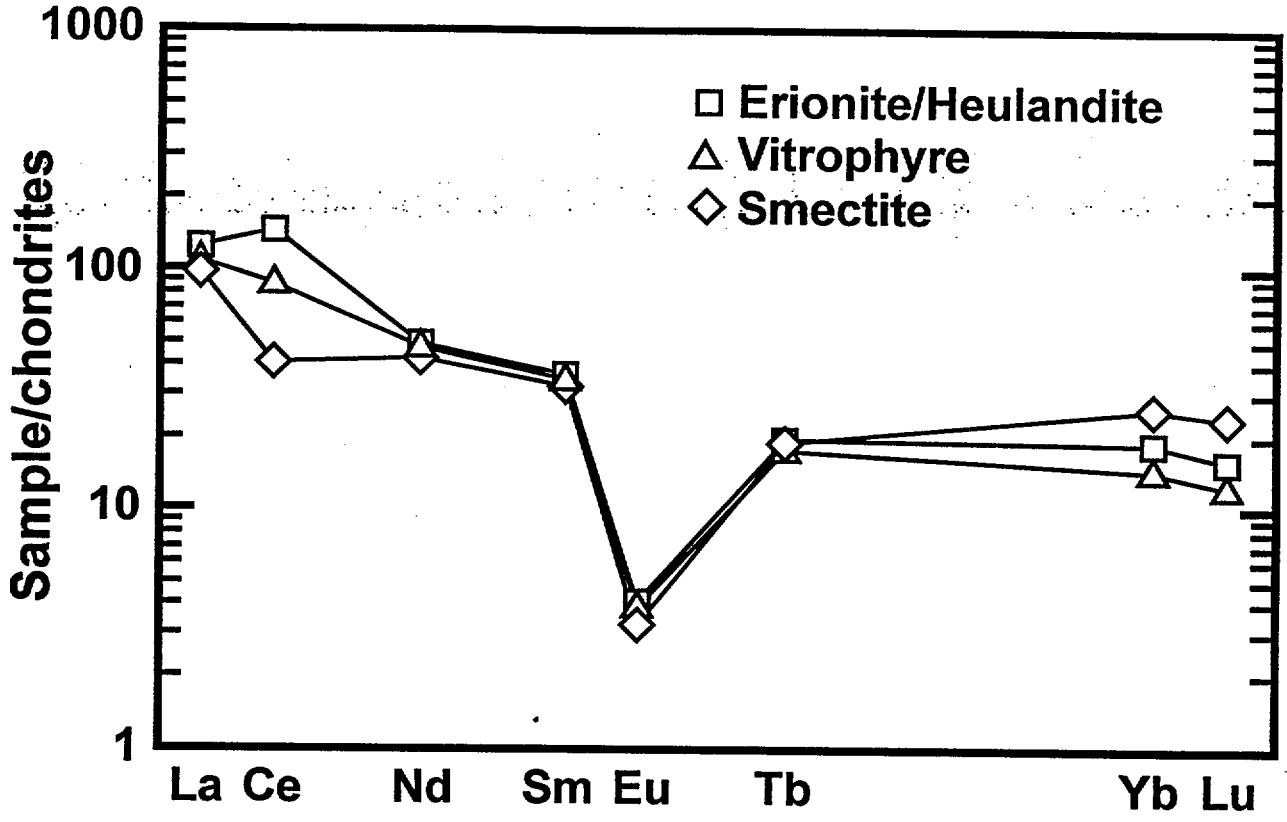

Figure 11: Chondrite-normalized lanthanide-element patterns for samples of erionite/heulandite, vitrophyre, and smectite from USW UZ#14.

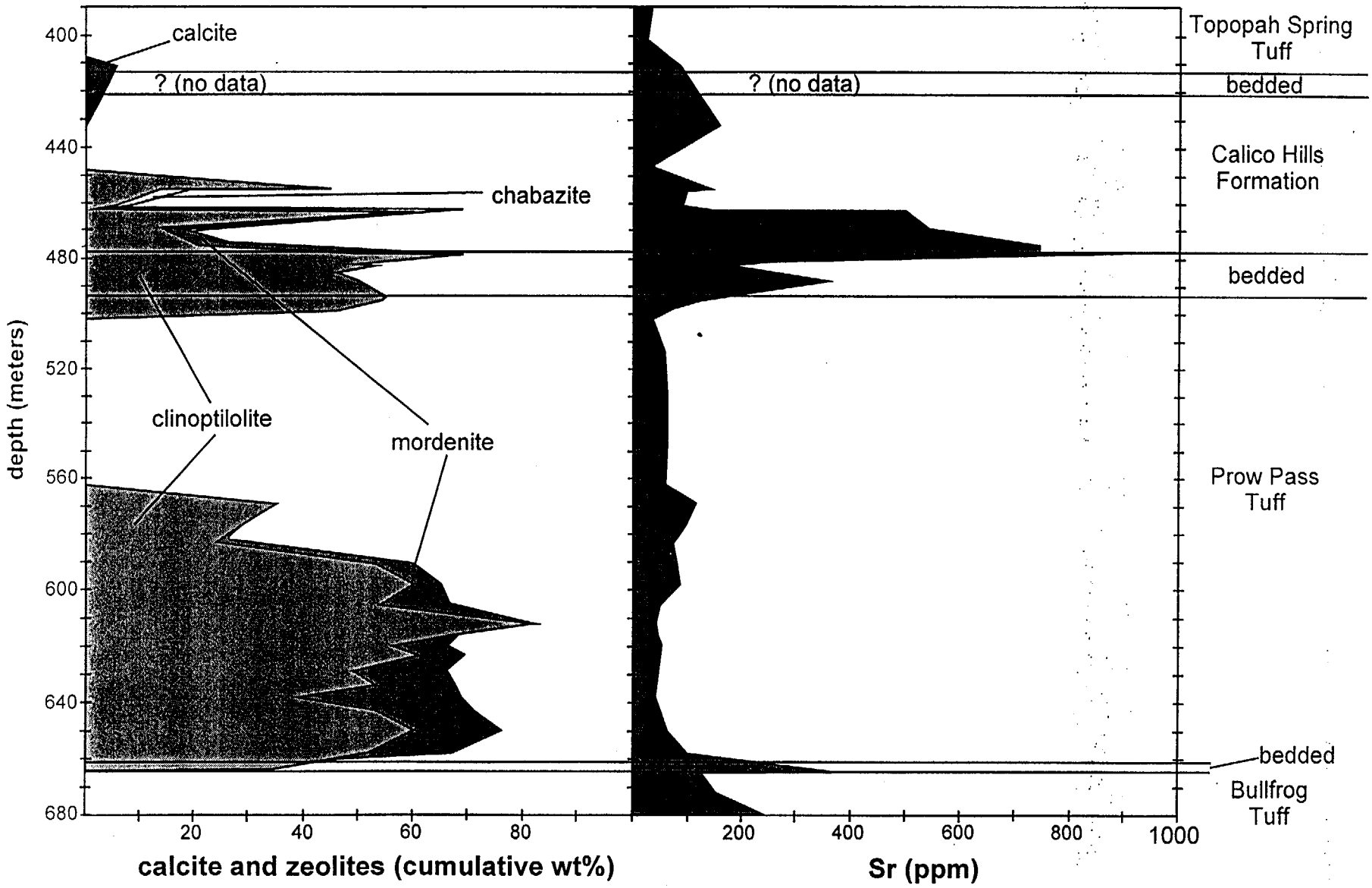

Figure 12: Calcite and cumulative zeolite abundances compared with Sr content in USW SD-7.

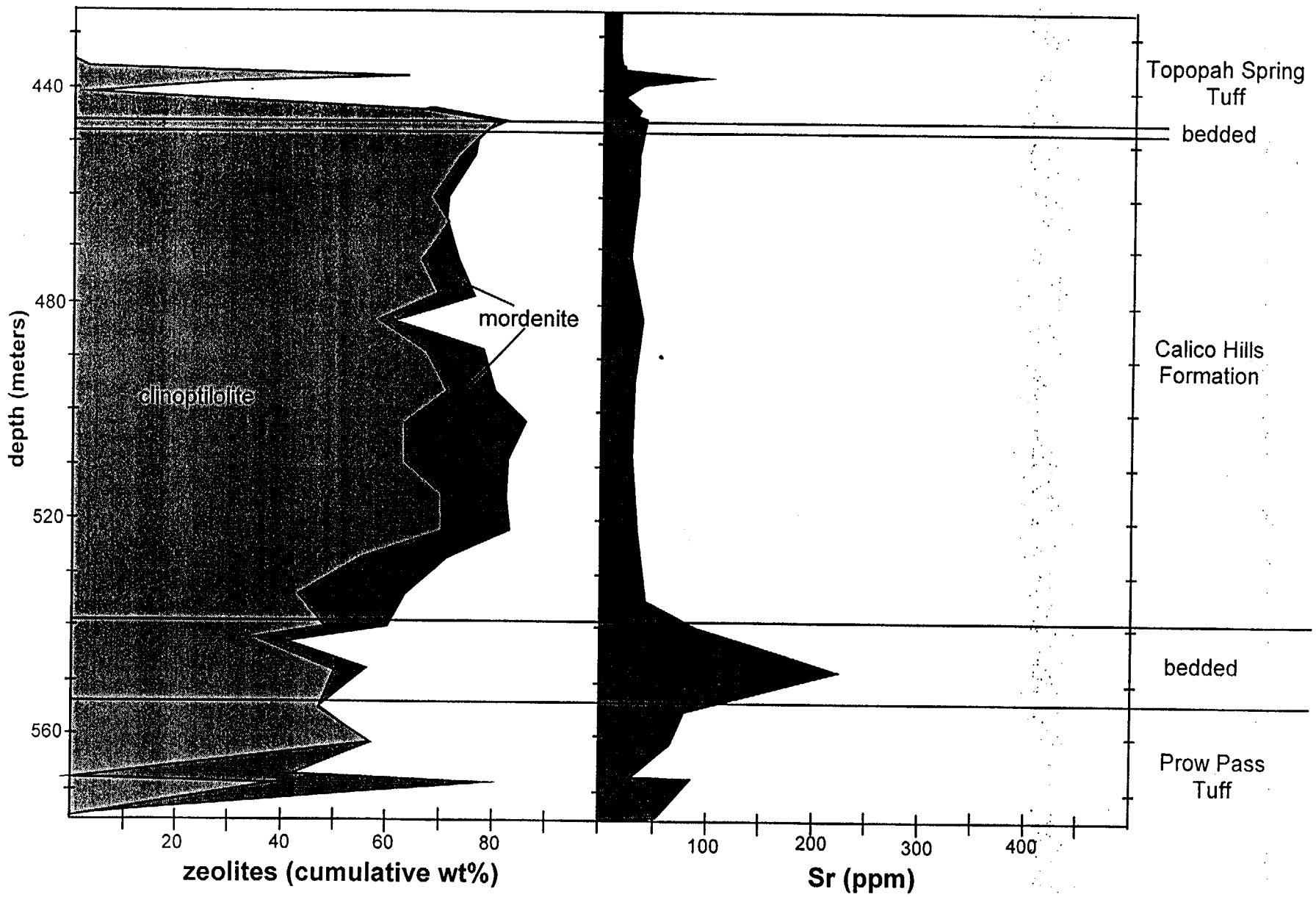

Figure 13: Cumulative zeolite abundances compared with Sr content in USW SD-9.

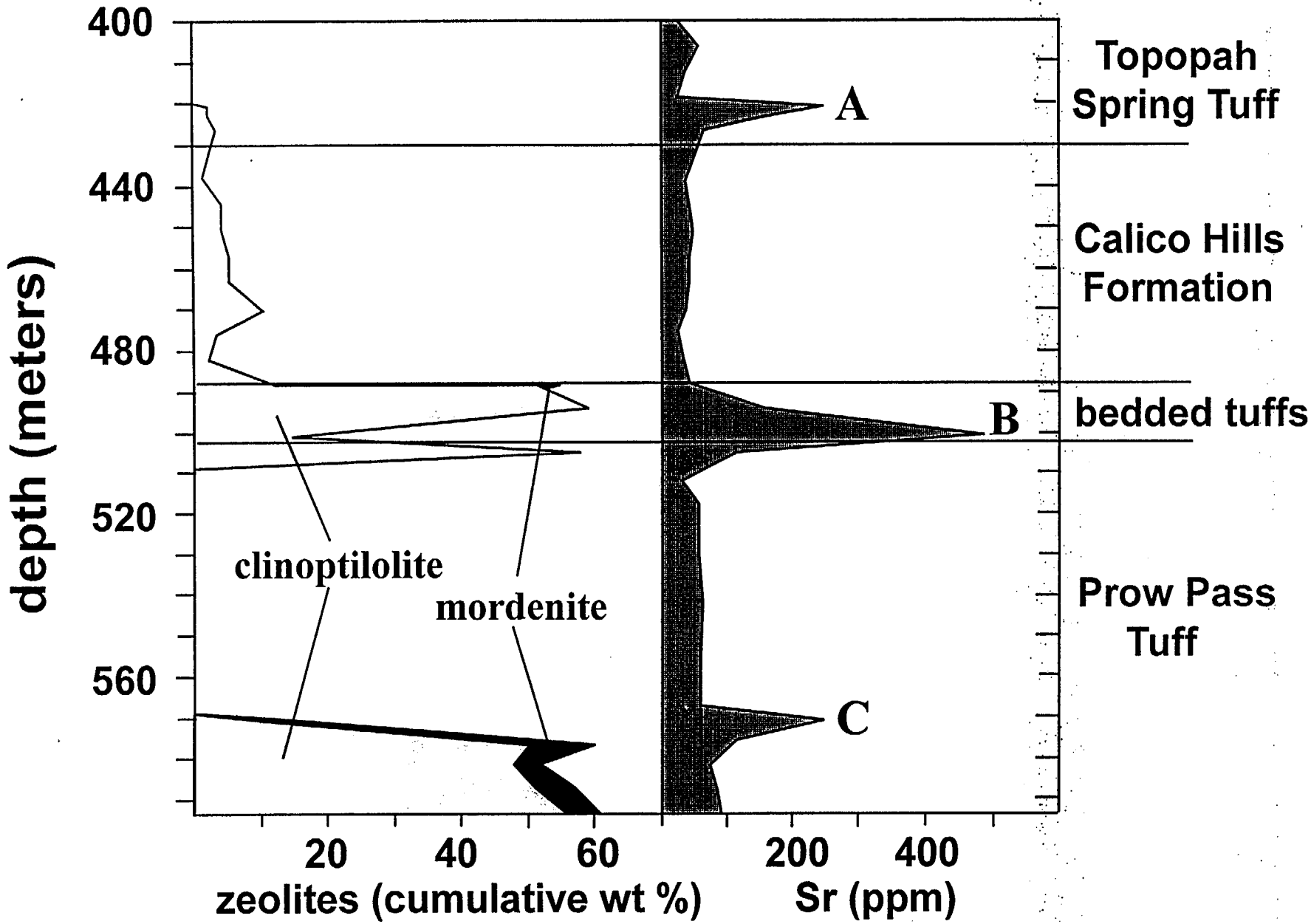

Figure 14: Comparison of cumulative zeolite abundances with Sr content in USW SD-12.

by the sorptive zeolites. As downward-flowing groundwater encountered these two zeolite-altered horizons, the upper portion of each zeolite sequence stripped Sr from solution, leaving little if any Sr in the groundwater as it proceeded through the remainder of the zeolite sequence. Evidence for effective Sr sorption in situation (A), where zeolite abundances are only 2-3%, emphasizes the very effective interaction of even small amounts of zeolite with groundwater at Yucca Mountain. Situation (B), within the bedded tuffs beneath the Calico Hills Formation, is more complex. Here the greatest Sr content is ~80 m below the Sr concentration zone of situation (A). The occurrence of a high Sr concentration at situation (B) simply reflects the more mafic and feldspathic composition of a portion of the bedded tuff below the Calico Hills Formation (Tacbt). It is important to know the initial compositional variation among units to recognize those variations caused by transport, as opposed to original stratigraphic variations.

The Vitric-to-Zeolitic Transition and Possible Paleo-Water Tables

Changes in past elevations in SWL have implications for potential changes in repository-to-SWL distance under possibly wetter climates in the future. One of the potential mineralogic indicators of past elevations in SWL beneath the exploration block is the distance between the top of the first major zeolitized horizon and the present SWL. Figure 15, modified from Chipera *et al.* (1995b), summarizes some estimates of this distance from various drill holes around Yucca Mountain. Ideally, a direct correlation between the occurrence of the top of this horizon of abundant zeolitization and an ancient SWL would be seen in all drill holes as a surface occurring at a relatively fixed elevation above the present SWL. However, there are several reasons (Levy, 1991) for this not to be the case:

(1) Even if the SWL were to rise, abundant zeolitization would not occur to the height of saturation if appropriate parent material (porous, nonwelded vitric tuff) were not present.

(2) More than one event of rise in the SWL can result in variable elevations of the zeolitization horizon because of possible tectonic offsets in parts of the exploration block between the timing of ancient and more recent rises in the SWL.

(3) The present SWL is relatively flat beneath the exploration block but rises sharply to the north and west (Ervin *et al.*, 1993). Similar variable elevations may have occurred in an ancient SWL, but not necessarily in the same locations as in the present SWL.

(4) Zeolitization can occur in unsaturated rocks, especially in situations of possible capillary draw, perched water, or lateral transmission from features that may be significant sources of recharge during pluvial episodes.

(5) Widely spaced sample collections, and in particular the need to rely on cuttings or intermittent core/sidewall samples in all USW H- and WT-series holes, place large uncertainties on the estimates of the top of the zeolitized horizon (generally at least ±10 m). The contact between vitric and zeolitic rocks is also gradational, adding a further uncertainty in the location

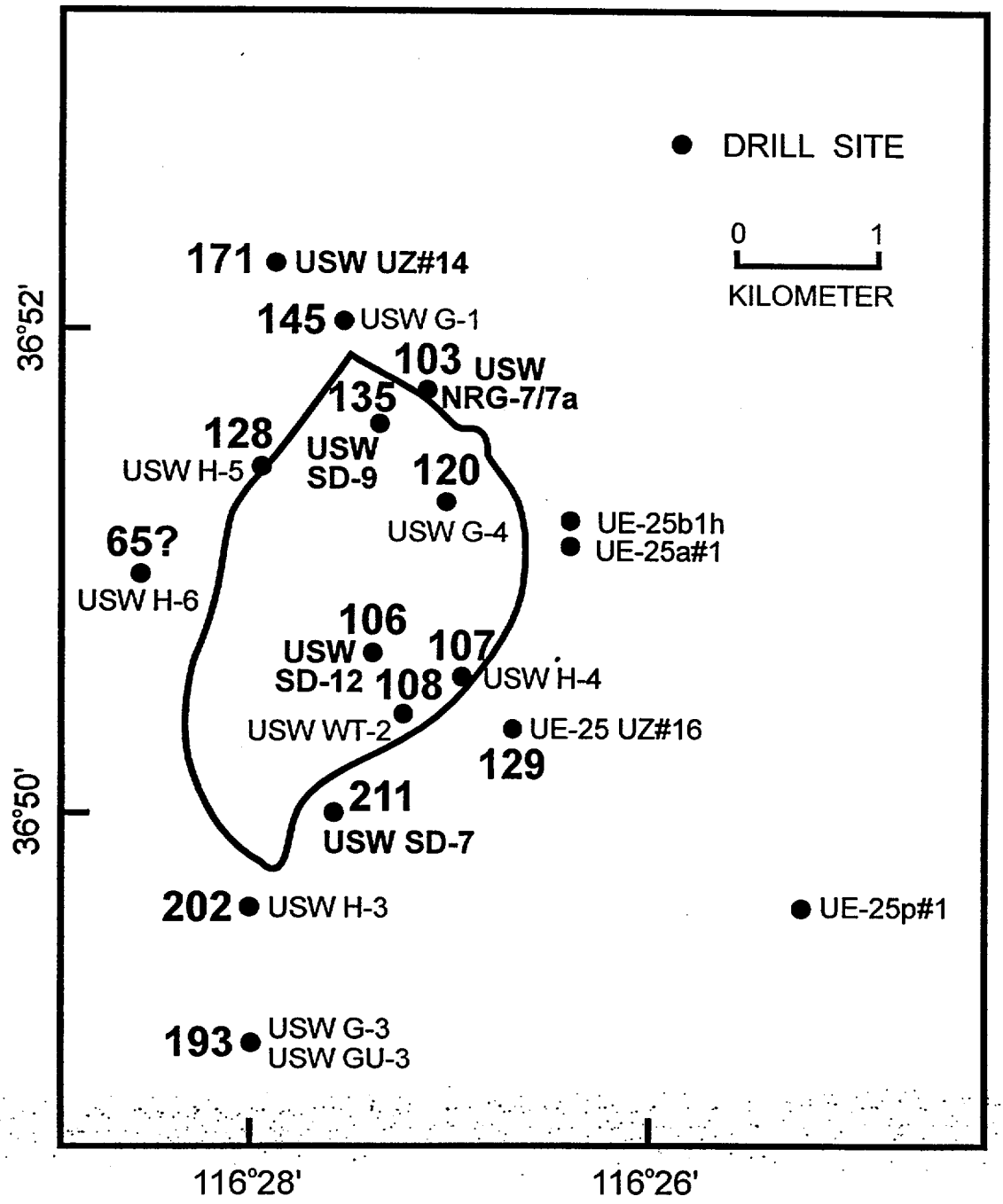

Figure 15: Elevations (m) above present SWL of the top of the most abundantly zeolitized horizon in drill cores at Yucca Mountain.

of the zeolitization front (*e.g.*, the ~70 m overlap of glass and zeolites in SD-12 and the ~35 m overlap in SD-7 noted in this report).

Given these caveats, there remains a significant number of drill cores with zeolitization horizons about 106-135 m above the present SWL (Fig. 15). Unfortunately, all of these cores are closely clustered in one central area and are thus of uncertain regional significance. The search for ancient SWLs will require the examination of multiple lines of evidence. Combined studies of structural indications of fault displacements of the zeolitization horizon, of glass preservation, and of other mineral distributions (*e.g.*, tridymite) have been interpreted to indicate that past rises in the SWL may have been as high as the vitric/zeolitic transition in the past but, since that time, have been no higher than ~60 m (Levy, 1991). Studies of Sr-isotopes in calcite at Yucca Mountain suggest a possible ancient SWL ~85 m above the present SWL (Marshall *et al.*, 1993). Hydrologic modeling suggests a maximum SWL rise of 130 m (Czarnecki, 1985). At present, it appears the modeled SWL maximum rise of 130 m may be closest to inferences of past SWL from zeolite occurrences. However, other constraints such as tridymite distributions continue to cast doubt on the utility of zeolite occurrences as measures of past water-table rise.

Levy (1991) pointed out that the localities with almost no drill-core data, in the central and southern part of the exploration block, are critical to this question, for it is here that the vitric-to-zeolitic transition of the Calico Hills Formation occurs. Drill cores USW SD-12 and USW SD-7 provide important data for filling this gap, but the data are sufficiently complex to leave some questions unresolved. The zeolite abundance data from USW SD-12 suggest a maximum past water-table rise of 106 m, but persistence of tridymite at greater depth could be interpreted to limit this rise to a timespan of less than ~10^6 yr (Levy, 1991; Fig. 6). Similarly, the zeolite abundance data from USW SD-7 suggest a maximum past water-table rise of 211 m, yet persistence of tridymite at depth could limit this rise to <127 m (Fig. 4). Clearly the mineral occurrences that might be interpreted as indicators of past water-table elevations yield conflicting interpretations and adequate interpretations must explain all of the conflicting data.

It should be remembered that the horizon of concern is that of the vitric-to-zeolitic transition, and one may as readily define a possible surface of past water-table rise based on the deepest preservation of abundant (≥10%) nonwelded glass as on the shallowest occurrence of abundant zeolites. Using the depth of abundant glass as a criterion, a different set of "past water table elevations" can be defined as shown in Figure 16. Divergences between the zeolite-based (Fig. 15) and glass-based (Fig. 16) model surfaces are in some cases caused by the inadequacies of dealing with widely-spaced analyses of cuttings (*e.g.*, ~34 m in USW H-5), but the more recent data show a real and large overlap of glassy and zeolitic samples across a dispersed vitric-to-zeolitic transition (~35 m in USW SD-7). In the most extreme example, the vitric-to-zeolitic transition in USW SD-12 is dispersed over a vertical range of ~70 m if the

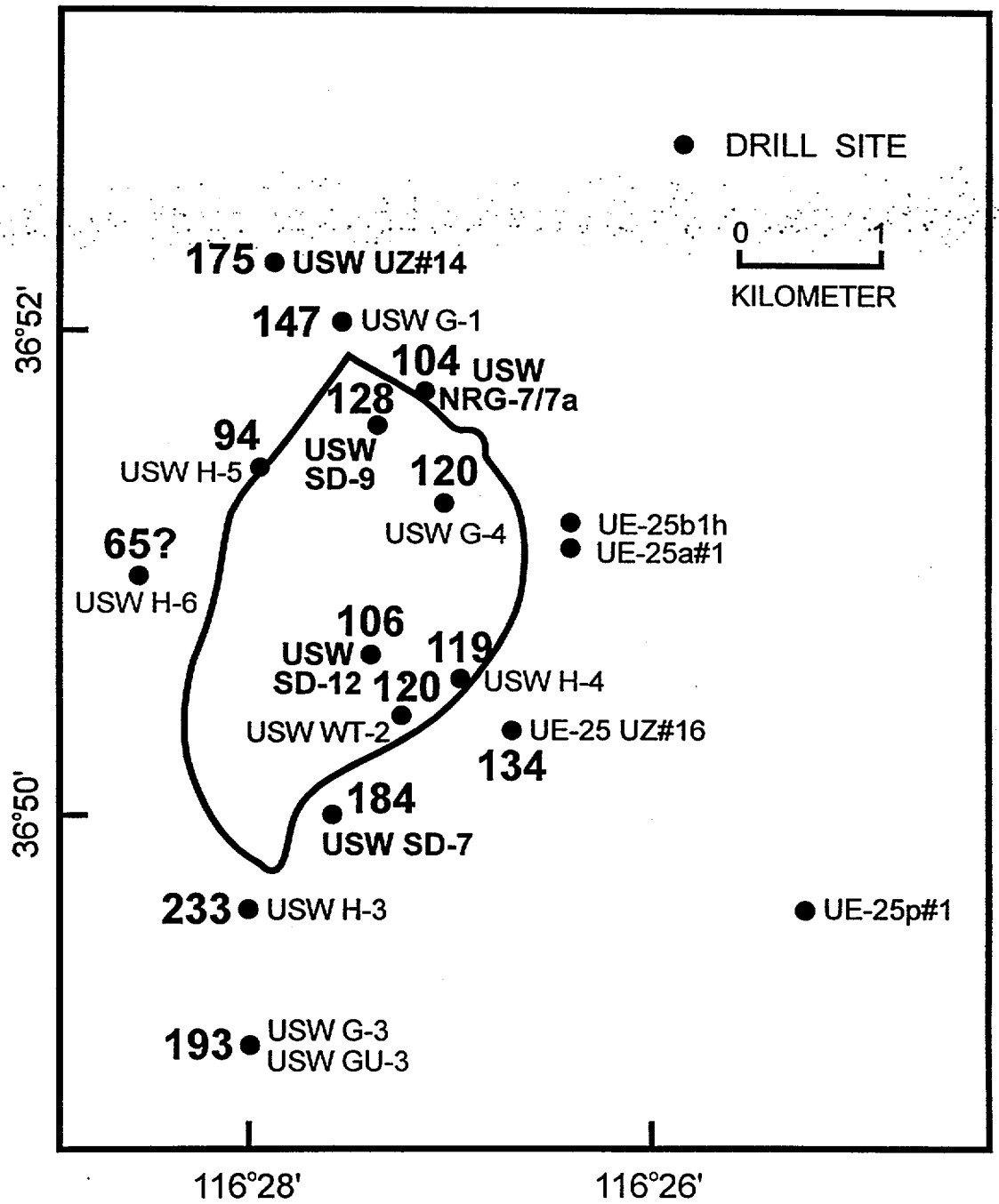

Figure 16: Elevations (m) above present SWL of the bottom of the deepest abundant nonwelded glass in the unsaturated zone for drill cores at Yucca Mountain.

slightly to moderately zeolitized samples of the Calico Hills Formation and the Topopah Spring Tuff are considered (note that these occurrences of ≤10% zeolite were not included when determining the top of the zeolitized horizon in Figure 15). This consideration is of more than passing interest, because the abundance at which zeolites become effective in sorption is an important factor to be considered in performance calculations. The Sr data indicate that the ~70 m of slightly zeolitized tuff in USW SD-12 can be effective in sorbing those alkaline earth radionuclides for which clinoptilolite is highly selective. Although the sorption of complex transuranics by clinoptilolite is minor (Robinson *et al.*, 1995), potentially greater permeability of partially zeolitized tuffs, in contrast to those that are fully zeolitized, may permit dispersed access of radionuclide-bearing solutions to zeolite surfaces. This is a most important factor, suggesting that the lithologic barriers beneath a repository horizon may not be simply categorized as devitrified, vitric, and zeolitic but should include another hybrid lithology that is made up of intercalated vitric and zeolitic materials.

IV. CONCLUSIONS

Drill holes USW NRG-6, NRG-7/7a, SD-7, SD-9, SD-12, and UZ#14 provide an important addition to previous core determinations of mineral distributions at Yucca Mountain. Previous concepts of mineral distributions (Bish and Chipera, 1989) have largely been borne out by the results from these drill holes. However, closer sample spacing has provided a more exact determination of mineral stratigraphy, particularly the transition/alteration of vitric intervals to zeolites. Moreover, the occurrence of chabazite in the vitric zone, the broad overlap of vitric and zeolitic horizons (over vertical ranges up to 70 m), the significant abundance of erionite in UZ#14, and the previously unrecognized importance of the bedded tuffs beneath the Calico Hills Formation as a subunit with unique zeolitization properties, all emphasize that we lack a complete understanding of mineral distributions at Yucca Mountain, even in close proximity to the host rock, and that "surprises" will still be encountered. The data obtained in drill holes USW SD-7, SD-9, SD-12, and UZ#14,put additional constraints on maximum and minimum zeolite abundances and on the three-dimensional stratigraphy derived from these data. The additional information obtained from these cores will improve the 3-D mineralogic models needed for adequate performance assessments of Yucca Mountain.

Although quantitative XRD analyses from drill holes USW NRG-6, NRG-7/7a, SD-7, SD-9, SD-12 and UZ#14 will soon be incorporated into the 3-D mineralogic model, additional analyses in new core and the non-Q data will still be required to exert statistical control when extrapolating the model to the west and to the south where we have extremely limited mineralogic data, even when the non-Q drill cores are included. Currently the Project is planning new drill holes, however, they plan to conduct only limited core sampling. Although this approach will reduce drilling costs, the utility of these holes in improving the knowledge of

mineral distributions at Yucca Mountain is doubtful. Cuttings can provide some useful information but the poor quality of cuttings in USW H-3 shows that problems in collecting quality cuttings, either from the poor sampling of particular lithologies or from drilling technique, can lead to very limited value of the material obtained. The costs of poorer quality versus costs of core collection should be considered carefully in future drilling.

ACKNOWLEDGMENTS

This work was supported by the Yucca Mountain Site Characterization Project as part of the Civilian Radioactive Waste Management Program of the U. S. Department of Energy. We are grateful to S. Levy for helpful review comments.

REFERENCES

Bish, D. L. (1989) Evaluation of past and future alterations in tuff at Yucca Mountain, Nevada, based on the clay mineralogy of drill cores USW G-1, G-2, and G-3. Los Alamos National Laboratory report LA-10667-MS, 40p.

Bish, D. L., and D. T. Vaniman (1985) Mineralogic summary of Yucca Mountain, Nevada. Los Alamos National Laboratory report LA-10543-MS, 55p.

Bish, D. L., and S. J. Chipera (1987) Detection of trace amounts of erionite in samples using X-ray powder diffraction and profile refinement. Proceedings of the Clay Minerals Society 24th Annual Meeting, Socorro, New Mexico, 32.

Bish, D. L., and S. J. Chipera (1988) Problems and solutions in quantitative analysis of complex mixtures by X-ray powder diffraction, in *Advances in X-Ray Analysis*, C. S. Barrett, J. V. Gilfrich, R. Jenkins, J. C. Russ, J. W. Richardson, Jr., and P. K. Predecki, Eds. (Plenum Press, New York) Vol. 31, 295–308.

Bish, D. L., and S. J. Chipera (1989) Revised mineralogic summary of Yucca Mountain, Nevada, Los Alamos National Laboratory report LA-11497-MS, 68p.

Bish, D. L., and S. J. Chipera (1991) Detection of trace amounts of erionite using X-ray powder diffraction: Erionite in tuffs of Yucca Mountain Nevada, and Central Turkey, Clays and Clay Minerals **39**, 437–445.

Bish, D. L., and R. C. Reynolds, Jr. (1989) Sample preparation for X-ray diffraction, in *Modern Powder Diffraction*, D. L. Bish and J. E. Post, Eds. (Mineralogical Society of America, Washington, D.C.) Vol. 20, 73–99.

Bish, D. L., S. J. Chipera, G. D. Guthrie, and D. T. Vaniman (1995) Letter Report: The occurrence and distribution of erionite in drill holes at Yucca Mountain, Nevada Milestone LA4058.

Carlos, B. A., D. L. Bish, and S. J. Chipera (1991) Fracture-lining minerals in the lower Topopah Spring Tuff at Yucca Mountain. In *Proc. 2nd Annual High-Level Radioactive Waste Management Conf., Las Vegas, Nevada*, Amer. Nuclear Soc., Inc., La Grange Park, Illinois, 486–493.

Carlos, B. A., S. J. Chipera, D. L. Bish, and R. Raymond (1995a) Distribution and chemistry of fracture-lining zeolites at Yucca Mountain, Nevada. Natural Zeolites '93: Occurrence, Properties, Use, D.W. Ming and F.A. Mumpton, eds. International Committee on Natural Zeolites, Brockport, NY, 547–563.

Carlos, B. A., S. J. Chipera, and D. L. Bish (1995b) Distribution and chemistry of fracture-lining zeolites at Yucca Mountain, Nevada: Los Alamos National Laboratory Report LA-12977-MS, 92p.

Chipera, S. J., and D. L. Bish (1995) Multi-reflection RIR and intensity normalizations for quantitative analyses: Applications to feldspars and zeolites, Powder Diffraction **10**, 47–55.

Chipera, S. J., D. L. Bish, and B. A. Carlos (1995a) Equilibrium modeling of the formation of zeolites in fractures at Yucca Mountain, Nevada. Natural Zeolites '93: Occurrence, Properties, Use, D.W. Ming and F.A. Mumpton, eds. International Committee on Natural Zeolites, Brockport, NY, 565–577.

Chipera, S. J., D. T. Vaniman, B. A. Carlos, and D. L. Bish (1995b) Mineralogic variation in drill core UE-25 UZ#16, Yucca Mountain, Nevada. Los Alamos National Laboratory report, LA-12810-MS, 39p.

Chipera, S. J., D. T. Vaniman, and D. L. Bish (1996) Zeolite abundances and the vitric-to-zeolitic transition in drill holes USW SD-7, 9, and 12, Yucca Mountain, Nevada. Los Alamos YMP Milestone Report #LA4240, LA-EES-1-TIP-96-005, 20p.

Chipera, S. J., K. Carter-Krogh, D. T., Vaniman, D. L. Bish, and J. W. Carey (1997) Preliminary three-dimensional mineralogic model of Yucca Mountain, Nevada. Los Alamos National Laboratory YMP Deliverable No: SP321AM4.

Chung, F. H. (1974) Quantitative interpretation of X-ray diffraction patterns of mixtures. I. Matrix-flushing method for quantitative multicomponent analysis, Journal of Applied Crystallography **7**, 519–525.

Czarnecki, J. B. (1985) Simulated effects of increased recharge on the ground-water flow system of Yucca Mountain and vicinity, Nevada-California, U. S. Geol. Survey Water. Resources Invest. Report. 84-4344.

Ernst, W. G., and S. E. Calvert (1969) An experimental study of the recrystallization of porcelanite and its bearing on the origin of some bedded cherts, American Journal of Science, 267A, 114–133.

Ervin, E. M., R. R. Luckey, and D. J. Burkhardt (1993) Summary of revised potentiometric-surface map for Yucca Mountain and vicinity, Nevada, In *High Level Radioactive Waste Management*, Amer. Nuc. Soc. and Amer. Soc. Civil Eng., Proc. 4th Ann. Internat. Conf., Las Vegas, Nevada, 1554–1558.

Hower, J., and S. P. Altaner (1983) The petrologic significance of illite/smectite, Clay Minerals Society, 20th Annual Meeting, Buffalo, New York, 40.

JCPDS (1986) *Mineral Powder Diffraction File Data Book* (International Centre for Diffraction Data, Swarthmore, Pennsylvania).

Klug, H. P., and L. E. Alexander (1974) *X-ray Diffraction Procedures for Polycrystalline and Amorphous Materials* (John Wiley & Sons, Inc., New York).

Korotev, R. L. (1991) Chemical stratigraphy of two regolith cores from the Central Highlands of the Moon. In *Proceedings of the 21st Lunar and Planetary Science Conference*, Lunar and Planetary Institute, V. L. Sharpton and G. Ryder, eds., Houston, TX, 229–289.

Levy, S. S. (1984) Petrology of samples from drill holes USW H-3, H-4, and H-5, Yucca Mountain, Nevada, Los Alamos National Laboratory report, LA-9706-MS, 77p.

Levy, S. S. (1991) Mineralogic alteration history and paleohydrology at Yucca Mountain, Nevada, In *High Level Radioactive Waste Management*, Amer. Nuc. Soc. and Amer. Soc. Civil Eng., Proc. 2nd Internat. Conf., Las Vegas, Nevada, 477–485.

Levy, S. S., and J. R. O'Neil (1989) Moderate-temperature zeolitic alteration in a cooling pyroclastic deposit, Chemical Geology **76**, 321–326.

Loeven, C. (1993) A summary and discussion of hydrologic data from the Calico Hills nonwelded hydrogeologic unit at Yucca Mountain, Nevada. Los Alamos National Report LA-12376-MS, 102p.

Marshall, B. D., Z. E. Peterman, and J. S. Stuckless (1993) Strontium Isotopic evidence for a higher water table at Yucca Mountain, In *High Level Radioactive Waste Management*, Amer. Nuc. Soc. and Amer. Soc. Civil Eng., Proc. 4th Ann. Internat. Conf., Las Vegas, Nevada, 1948–1952.

Reynolds, R. C., Jr., and R. C. Reynolds III (1987) Description of program NEWMOD for the calculation of the one-dimensional X-ray diffraction patterns of mixed-layered clays; FORTRAN 77 Version NEWMOD 1.01, R.C. Reynolds, Jr., 8 Brook Dr., Hanover, New Hampshire.

Robinson, B. A., A. V. Wolfsberg, G. A. Zyvoloski, and C. W. Gable (1995) An unsaturated zone flow and transport model of Yucca Mountain. Los Alamos National Laboratory Milestone #3468.

Smith, D. K., M. C. Nichols, and M. E. Zolensky (1982) POWD10, a FORTRAN IV program for calculating X-ray powder diffraction patterns - Version 10, Pennsylvania State University, College of Earth and Mineral Sciences report.

Vaniman, D. T., and D. L. Bish (1995) The Importance of zeolites in the potential high-level radioactive waste repository at Yucca Mountain, Nevada, Natural Zeolites '93: Occurrence, Properties, Use, D.W. Ming and F.A. Mumpton, eds. International Committee on Natural Zeolites, Brockport, NY, 533–546.

Vaniman, D., D. Bish, D. Broxton, F. Byers, G. Heiken, B. Carlos, E. Semarge, F. Caporuscio, and R. Gooley (1984) Variations in authigenic mineralogy and sorptive zeolite abundance at Yucca Mountain, Nevada, based on studies of drill cores USW GU-3 and G-3, Los Alamos National Laboratory report LA-9707-MS, 71p.

QUALITY ASSURANCE

The LANL tracking number for this report is LA-EES-1-TIP-97-010.
The Data Tracking number for this report is LADV831321AQ97.001.

Previous Data Tracking Numbers for Data Referenced in This Report:

LASC831321DQ96.001 [Chipera, SJ, Vaniman, DT, and Bish, DL (1996) Zeolite abundances and the vitric-to-zeolitic transition in drill holes USW SD-7, 9, and 12, Yucca Mountain, Nevada. Los Alamos National Laboratory Report LA-EES-1-TIP-96-005, 20p.]

LASC831321DQ96.002 [DTN for the Los Alamos Min-Pet Summary and Synthesis report]

LA000000000110.002 and LA000000000111.002 [Bish, DL, and Chipera, SJ (1989) Revised mineralogic summary of Yucca Mountain, Nevada. Los Alamos National Laboratory Report LA-11497-MS, 68p.]

LA000000000086.002 [quantitative XRD portion of the report by Chipera, SJ, Vaniman, DT, Carlos, BA, and Bish, DL (1995) Mineralogic variation in drill core UE-25 UZ-16, Yucca Mountain, Nevada. Los Alamos National Laboratory Report LA-12810-MS, 39p.]

Computer Software Used in this Report:

XRD Data were obtained on the LANL EES-1 Siemens D500 X-ray powder diffractometers using the commercial software package—DIFFRAC5000.
LANL YMP release label = DIFFRAC5000-01-00-00.

Integrated peak intensities were obtained using the program GRAPHINT.
LANL YMP release label = GRAPHINT-01-00-00.

QUANT (version 5.04) had been qualified under the software QA requirements of the earlier QA program which included auxiliary software.
LANL YMP release label = QUANT-01-00-00.
The latest modifications to QUANT (producing version 5.05) were conducted in accordance with the QA program emplaced 31-JAN-1994 and are documented in TWS-ESS-1-1-92-03, pages 54–70.

Note Book / Log Book Entries Relevant to this Report:

TWS-EES-1-2-93-6	Pages 39-150
LA-EES-1-NBK-95-011	Pages 3-27, 53-64, 114-128, 131-137
TWS-ESS-1-3-89-17	Pages 47-80
TWS-ESS-1-8/86-57	Pages 50-81
TWS-ESS-1-7/86-35	Pages 64-91
TWS-EES-1-1-90-1	Pages 122-139
LA-EES-1-NBK-95-007	Pages 4-46

Figure Captions:

Figure 1: Map of Yucca Mountain, Nevada, showing the locations of the drill holes mentioned in the text.

Figure 2: Results of quantitative XRD analyses showing abundances of minerals and glass for drill hole NRG-6.

Figure 3: Results of quantitative XRD analyses showing abundances of minerals and glass for drill hole NRG-7/7A.

Figure 4: Results of quantitative XRD analyses showing abundances of minerals and glass for drill hole USW SD-7.

Figure 5: Results of quantitative XRD analyses showing abundances of minerals and glass for drill hole USW SD-9.

Figure 6: Results of quantitative XRD analyses showing abundances of minerals and glass for drill hole USW SD-12.

Figure 7: Results of quantitative XRD analyses showing abundances of minerals and glass for drill hole USW UZ#14.

Figure 8: Results of quantitative XRD analyses showing with greater detail the distribution of zeolites and glass through the vitric-to-zeolitic portion of drill hole USW UZ#14.

Figure 9: Results of quantitative XRD analyses showing abundances of minerals and glass for drill hole USW H-3.

Figure 10: Comparison of the vitric to zeolitic transition in drill holes USW SD-7, 9, and 12. Drill hole data has been normalized to elevation (m above sea level) to facilitate the comparisons.

Figure 11: Chondrite-normalized lanthanide-element patterns for samples of erionite/heulandite, vitrophyre, and smectite from USW UZ#14.

Figure 12: Calcite and cumulative zeolite abundances compared with Sr content in USW SD-7.

Figure 13: Cumulative zeolite abundances compared with Sr content in USW SD-9.

Figure 14: Cumulative zeolite abundances compared with Sr content in USW SD-12.

Figure 15: Elevations (m) above present SWL of the top of the most abundantly zeolitized horizon in drill cores at Yucca Mountain.

Figure 16: Elevations (m) above present SWL of the bottom of the deepest abundant nonwelded glass in the unsaturated zone for drill cores at Yucca Mountain.

APPENDICES

Appendix I: Quantitative XRD results for samples from drill hole USW NRG-6.

Appendix II: Quantitative XRD results for samples from drill hole USW NRG-7/7A.

Appendix III: Quantitative XRD results for samples from drill hole USW SD-7.

Appendix IV: Quantitative XRD results for samples from drill hole USW SD-9.

Appendix V: Quantitative XRD results for samples from drill hole USW SD-12.

Appendix VI: Quantitative XRD results for samples from drill hole USW UZ#14.

Appendix VII: Quantitative XRD results for samples from drill hole USW H-3.

Appendix VIII: Chemical analyses for drill hole USW SD-7.

Appendix IX: Chemical analyses for drill hole USW SD-9.

Appendix X: Chemical analyses for drill hole USW SD-12.

TIP/STUDY PLAN REVIEW SHEET

UNIQUE IDENTIFIER: LA-EES-1-TIP-97-010 REVISION: 0 REVIEWER: Schon Levy

LOCATION	REVIEWER'S COMMENTS	PREPARER'S RESPONSE
SEE FOLLOWING PAGE		

Los Alamos
Yucca Mountain Site
Characterization Project

Unique Identifier: LA-EES-1-TIP-97-010
Reviewer: Schön Levy

LOCATION	REVIEWER'S COMMENTS	Preparer's Response
All	Editorial comments are contained in review manuscript.	
page 4, para 2	*Clinoptilolite and other zeolites (e.g., erionite in drill hole USW UZ#14) often invade the basal vitrophyre.* Since these minerals are largely in the matrix (yes, the first observed occurrence of erionite, described by Levy, 1984, was in the matrix), "invade" seems an inaccurate term.	change "invade" to "occur in"
page 9, first para	*The top of the Topopah Spring Tuff vitrophyre shows the same thin layer of significant smectite and clinoptilolite....*Instead of the inaccurate "thin layer," use a description more compatible with your description of this interval on page 12 and elsewhere.	Accept. Paragraph was Re-worded.
page 11, first para, first sentence	*Major stratigraphically continuous intervals....*The use of "stratigraphically" is not clear in this context but is apparently different from its usage elsewhere in the paper. Suggest it be deleted.	Accept, word was deleted
page 12, third para	*...upper Paintbrush vitric zone* What is this terminology? The samples are from the Tptrv, the vitric zone of the Crystal-Rich Member of the Topopah Spring Tuff.	"Vitric zone" spans across the Yucca Mt, Pah Canyon, and the Topopah Spring Tuffs
page 16, first 2 para	Levy (1991) sez: The <u>highest</u> rise of the SWL may be taken as the elevation difference between the current SWL and the top of the vitric-zeolitic transition, e.g., 120 m in USW G-4. This high SWL position was achieved >11.6 mya (using pre-Sawyer et al., 1994, geochronology). <u>Since that time</u>, the SWL has been no more than 60 m above its present level. *The paper under review incorrectly refers to the 60-m value as the highest rise ever achieved by the SWL.* *The paper under review compares possible magnitudes of SWL rises inferred from the distributions of zeolites and tridymite, based on Levy (1991) and obtains highly contradictory results.* Levy (1991) stresses that the time required for the tridymite-to-quartz transition under saturated conditions may be of the order of 10^6 years, compared to about 10^4 years for the glass-to-zeolite transition. The apparent contradiction may simply reflect that saturated conditions under an elevated SWL did not endure long enough for tridymite to recrystallize.	reworded to: "... may have been as high as the vitric/zeolitic transition in the past but, since that time, have been no higher than ~60m..." reworded to: "... limit this rise to a timespan of less than ~10^6 yr (Levy, 1991; Fig. 6)."

Encl. 3

YMP-244-R0
06/28/96

YUCCA MOUNTAIN SITE CHARACTERIZATION PROJECT
DELIVERABLE ACCEPTANCE REVIEW
(YAR) YAR No._____

Page ___of___

Date TPM YAR No. Assigned:_____

Signatures on this document represent signers' acknowledgment that the applicable procedure has been read, understood, and complied with.

SECTION I - DELIVERABLE ACCEPTANCE REVIEW REQUEST

1. DELIVERABLE TITLE/DESCRIPTION: Mineralogic Variation in Drill Holes USW NRG-6, 7/7a, SD-7, 9, 12, and UZ#14

2. CURRENT DOCUMENT NO.: ☐ N/A

3. REV/ICN: (current) ☐ N/A

4. DELIVERABLE ID NO.: SP321BM4

5. DELIVERABLE DUE DATE: June 6, 1997

6. WBS NO.: 1.2.3.2.1

7. QA DESIGNATION: ☐ Q ☐ Non-Q

8. RESPONSIBLE ASSISTANT MANAGER/DIRECTOR: ORG:

9. YAP 30.12 REVIEWS COMPLETED: ☐ YES ☐ NO ☐ N/A

10. YMP-REQUIRED REVIEWS COMPLETED: ☐ YES ☐ NO ☐ N/A

11. COMPLETED ATDT FORM (copy) ☐ or TRANSMITTAL LETTER TO ATDT ADMINISTRATOR (copy) ☐ ATTACHED

ATDT No. _____ ☐ N/A

☐ Additional Material Attached

12. REQUESTED BY:

Larry Hayes/Gilles Bussod
Print Name

Organization

Phone No.

Signature

6-4-97
Date

SECTION II - DELIVERABLE REVIEW RESULTS

13. ☐ Pending Deliverable (provide reason/instructions in this block) ☐ N/A

RESPONSIBLE CONTRACTING OFFICER'S REPRESENTATIVE:_____ Signature _____ Date

13a. TPM: YAR copy to Requestor: _____ Date

14. ☐ ACCEPTED ☐ REJECTED (Provide reason/instructions in Block 15)

15. COMMENTS:

16. RESPONSIBLE CONTRACTION OFFICER'S REPRESENTATIVE:

_____ Signature _____ Date

SECTION III - DELIVERABLE REVIEW COMPLETION

17. YAR copy to Contracting Officer's Representative:_____ Date

18. YAR copy to Requestor: _____ Date

19. TECHNICAL PUBLICATIONS MANAGEMENT (YAR Completion)

_____ Signature _____ Date

Appendix I. Quantitative XRD results for drill core USW NRG-6.

Sample	LANL #	Depth (m)	Smect-ite	Tridy-mite	Cristob-alite	Quartz	Feld-spar	Glass	Hem-atite	Mica	Horn-blende	Calcite	Total
Tiva Canyon Tuff			**0 - 48.3 m**										
2.1/2.2	1289p1	0.7	2 ± 1	12 ± 1	24 ± 3	2 ± 1	57 ± 8	–	1 ± 1	–	–	–	98 ± 9
24.2/24.5	1290p1	7.5	3 ± 1	5 ± 1	32 ± 2	1 ± 1	58 ± 8	–	1 ± 1	–	–	–	100 ± 8
49.8/50.0	1291p1	15.2	3 ± 1	4 ± 1	33 ± 2	1 ± 1	58 ± 8	–	Trc.	–	–	–	99 ± 8
67.2/67.4	1292p1	20.5	4 ± 1	6 ± 1	30 ± 2	2 ± 1	58 ± 8	–	1 ± 1	–	–	–	101 ± 8
92.2/92.9	1293p3	28.3	3 ± 1	4 ± 1	30 ± 2	4 ± 1	58 ± 8	–	Trc.	–	–	–	99 ± 8
124.1/124.3	1294p1	37.9	Trc.	2 ± 1	34 ± 2	1 ± 1	58 ± 8	–	1 ± 1	–	–	–	96 ± 8
139.4/139.6	1295p1	42.6	21 ± 6	–	12 ± 1	–	25 ± 4	42 ± 7	–	–	–	–	100 ± 7
157.8/158.1	1296p1	48.2	19 ± 6	–	Trc.	–	4 ± 1	77 ± 6	–	–	–	–	100 ± 6
bedded tuffs			**48.3 - 53.3 m**										
163.3/163.6	1297p1	49.9	9 ± 3	–	1 ± 1	Trc.	7 ± 1	83 ± 3	–	–	–	–	100 ± 3
169.2/169.5	1298p1	51.7	18 ± 5	–	2 ± 1	3 ± 1	17 ± 2	59 ± 5	–	Trc.	1 ± 1	–	100 ± 6
Pah Canyon Tuff			**53.3 - 67.3 m**										
178.0/178.3	1299p1	54.4	9 ± 3	–	1 ± 1	–	11 ± 2	79 ± 3	–	Trc.	–	–	100 ± 4
200.5/201.0	1300p1	61.3	4 ± 1	–	1 ± 1	1 ± 1	20 ± 3	73 ± 3	–	1 ± 1	–	–	100 ± 4
209.0/209.5	1301p1	63.9	2 ± 1	–	1 ± 1	1 ± 1	19 ± 3	76 ± 3	–	Trc.	–	1 ± 1	100 ± 4
219.0/219.3	1302p1	66.8	3 ± 1	–	Trc.	–	9 ± 1	88 ± 1	–	Trc.	–	–	100 ± 1
bedded tuffs			**67.3 - 75.2 m**										
223.7/224.2	1303p1	68.3	5 ± 2	–	1 ± 1	3 ± 1	13 ± 2	77 ± 3	–	1 ± 1	–	–	100 ± 3
230.0/230.6	1304p1	70.3	38 ± 11	–	1 ± 1	1 ± 1	8 ± 1	51 ± 11	1 ± 1	–	–	–	100 ± 11
235.0/235.4	1305p1	71.8	5 ± 2	–	Trc.	1 ± 1	12 ± 2	81 ± 3	–	1 ± 1	–	–	100 ± 3
237.0/237.4	1306p1	72.4	22 ± 7	–	Trc.	1 ± 1	24 ± 3	50 ± 7	1 ± 1	2 ± 1	–	–	100 ± 8
Topopah Spring Tuff			**75.2 m - bottom**										
251.0/251.5	1307p1	76.7	11 ± 3	–	1 ± 1	3 ± 1	13 ± 2	69 ± 4	1 ± 1	2 ± 1	–	–	100 ± 4
258.5/258.8	1308p1	78.9	Trc.	–	–	1 ± 1	6 ± 1	93 ± 1	Trc.	–	–	–	100 ± 1
260.1/260.3	1309p1	79.3	Trc.	–	1 ± 1	–	15 ± 2	80 ± 2	2 ± 1	2 ± 1	–	–	100 ± 3
263.6/263.8	1310p1	80.4	–	4 ± 1	19 ± 11	2 ± 1	73 ± 10	–	Trc.	3 ± 1	–	–	101 ± 15
266.1/266.2	1311p1	81.1	–	3 ± 1	21 ± 12	1 ± 1	72 ± 10	–	1 ± 1	2 ± 1	–	–	100 ± 16
287.7/288.1	1396p1	87.8	–	9 ± 1	15 ± 1	–	69 ± 10	–	1 ± 1	1 ± 1	–	–	95 ± 10
308.5/308.8	1397p1	94.1	–	3 ± 1	14 ± 1	1 ± 1	75 ± 11	–	1 ± 1	1 ± 1	–	–	95 ± 11

Appendix I. Quantitative XRD results for drill core USW NRG-6 (continued).

Sample	LANL #	Depth (m)	Smect-ite	Tridy-mite	Cristob-alite	Quartz	Feld-spar	Glass	Hem-atite	Mica	Horn-blende	Calcite	Total
327.2/327.5	1398p1	99.8	–	12 ± 1	9 ± 4	–	76 ± 11	–	2 ± 1	1 ± 1	–	–	100 ± 12
346.8/347.2	1399p1	105.8	1 ± 1	8 ± 1	9 ± 4	–	80 ± 11	–	1 ± 1	1 ± 1	–	–	100 ± 12
366.1/366.3	1400p1	111.7	2 ± 1	10 ± 1	12 ± 1	–	74 ± 10	–	1 ± 1	1 ± 1	–	–	100 ± 10
386.6/386.8	1401p1	117.9	2 ± 1	12 ± 1	9 ± 4	–	75 ± 11	–	1 ± 1	1 ± 1	–	–	100 ± 12
408.4/408.7	1402p1	124.6	3 ± 1	13 ± 1	11 ± 1	–	69 ± 10	–	1 ± 1	Trc.	–	–	97 ± 10
427.8/428.2	1403p1	130.5	5 ± 2	15 ± 2	12 ± 2	Trc.	64 ± 9	–	1 ± 1	Trc.	–	–	97 ± 10
447.2/447.5	1404p1	136.4	11 ± 3	22 ± 2	11 ± 2	2 ± 1	55 ± 8	–	1 ± 1	Trc.	–	–	102 ± 9
465.0/465.5	1405p1	141.9	4 ± 1	18 ± 2	17 ± 2	3 ± 1	55 ± 8	–	1 ± 1	Trc.	–	–	98 ± 9
480.8/481.1	1406p1	146.6	4 ± 1	9 ± 1	24 ± 2	6 ± 1	54 ± 8	–	1 ± 1	Trc.	–	–	98 ± 8
498.1/498.7	1407p1	152.0	1 ± 1	10 ± 1	21 ± 2	8 ± 1	55 ± 8	–	1 ± 1	Trc.	–	–	96 ± 8
512.2/512.7	1408p1	156.3	4 ± 1	17 ± 2	12 ± 2	8 ± 1	56 ± 8	–	1 ± 1	Trc.	–	–	98 ± 9
516.6/516.9	1409p1	157.6	2 ± 1	11 ± 1	18 ± 2	1 ± 1	63 ± 9	–	1 ± 1	Trc.	–	–	96 ± 9
531.4/531.8	1410p1	162.1	4 ± 1	8 ± 1	28 ± 3	2 ± 1	53 ± 7	–	1 ± 1	Trc.	–	–	96 ± 8
550.7/551.0	1411p1	167.9	4 ± 1	10 ± 1	20 ± 2	9 ± 1	55 ± 8	–	1 ± 1	Trc.	–	–	99 ± 8
569.1/569.4	1412p1	173.6	4 ± 1	8 ± 1	24 ± 2	9 ± 1	54 ± 8	–	1 ± 1	Trc.	–	–	100 ± 8
589.2/589.5	1413p1	179.7	3 ± 1	7 ± 1	20 ± 2	13 ± 1	54 ± 8	–	1 ± 1	Trc.	–	–	98 ± 8
609.0/609.4	1414p1	185.8	3 ± 1	6 ± 1	16 ± 1	18 ± 1	54 ± 8	–	1 ± 1	Trc.	–	–	98 ± 8
633.0/633.4	1415p1	193.1	3 ± 1	6 ± 1	21 ± 2	16 ± 1	54 ± 8	–	1 ± 1	Trc.	–	1 ± 1	102 ± 9
653.2/653.6	1416p1	199.2	3 ± 1	6 ± 1	21 ± 2	13 ± 1	54 ± 8	–	Trc.	Trc.	–	–	97 ± 8
666.9/667.3	1417p1	203.4	5 ± 2	4 ± 1	18 ± 1	18 ± 1	52 ± 7	–	1 ± 1	Trc.	–	–	98 ± 8
686.0/686.4	1418p1	209.2	3 ± 1	5 ± 1	14 ± 1	20 ± 2	54 ± 8	–	Trc.	–	–	–	96 ± 8
706.2/706.7	1491p1	215.4	3 ± 1	3 ± 1	29 ± 2	7 ± 1	54 ± 8	–	1 ± 1	Trc.	–	–	97 ± 8
726.5/726.9	1420p1	221.6	2 ± 1	4 ± 1	31 ± 2	4 ± 1	54 ± 8	–	1 ± 1	–	–	–	96 ± 8
745.4/745.8	1421p1	227.3	3 ± 1	1 ± 1	29 ± 2	10 ± 1	54 ± 8	–	Trc.	Trc.	–	–	97 ± 8
766.7/767.2	1422p1	233.8	2 ± 1	5 ± 1	17 ± 1	17 ± 1	55 ± 8	–	2 ± 1	Trc.	–	–	98 ± 8
786.6/786.9	1423p1	239.9	3 ± 1	2 ± 1	33 ± 2	3 ± 1	57 ± 8	–	1 ± 1	–	–	–	99 ± 8
800.3/800.5	1424p1	244.0	3 ± 1	3 ± 1	27 ± 2	10 ± 1	55 ± 8	–	–	Trc.	–	–	98 ± 8
805.5/805.7	1425p1	245.6	2 ± 1	3 ± 1	32 ± 2	4 ± 1	54 ± 8	–	1 ± 1	–	–	–	96 ± 8
826.5/827.0	1426p1	252.1	3 ± 1	5 ± 1	17 ± 1	19 ± 1	55 ± 8	–	1 ± 1	Trc.	–	–	100 ± 8
845.3/845.5	1427p1	257.7	1 ± 1	2 ± 1	16 ± 1	22 ± 2	56 ± 8	–	1 ± 1	Trc.	–	–	98 ± 8

Appendix I. Quantitative XRD results for drill core USW NRG-6 (continued).

Sample	LANL #	Depth (m)	Smect-ite	Tridy-mite	Cristob-alite	Quartz	Feld-spar	Glass	Hem-atite	Mica	Horn-blende	Calcite	Total
865.5/865.8	1428p1	263.9	3 ± 1	4 ± 1	11 ± 1	25 ± 2	55 ± 8	–	1 ± 1	Trc.	–	–	99 ± 8
885.5/885.9	1429p1	270.0	1 ± 1	2 ± 1	10 ± 1	29 ± 2	54 ± 8	–	Trc.	Trc.	–	–	96 ± 8
903.9/904.1	1430p1	275.6	3 ± 1	1 ± 1	4 ± 1	36 ± 2	55 ± 8	–	1 ± 1	Trc.	–	–	100 ± 8
926.1/926.3	1431p1	282.3	4 ± 1	3 ± 1	14 ± 1	25 ± 2	53 ± 7	–	Trc.	Trc.	–	–	99 ± 7
943.6/943.9	1432p1	287.7	3 ± 1	3 ± 1	22 ± 2	18 ± 1	53 ± 7	–	Trc.	Trc.	–	–	99 ± 7
962.9/963.3	1433p1	293.6	1 ± 1	7 ± 1	16 ± 1	18 ± 1	55 ± 8	–	1 ± 1	Trc.	–	–	98 ± 8
983.9/984.4	1434p1	300.1	1 ± 1	6 ± 1	15 ± 1	20 ± 2	54 ± 8	–	1 ± 1	–	–	–	97 ± 8
1006.0/1006.4	1435p1	306.8	Trc.	4 ± 1	15 ± 1	23 ± 2	54 ± 8	–	1 ± 1	Trc.	–	–	97 ± 8
1025.5/1025.8	1436p1	312.7	2 ± 1	4 ± 1	11 ± 1	28 ± 2	53 ± 7	–	1 ± 1	–	–	–	99 ± 8
1043.1/1043.4	1437p1	308.0	2 ± 1	2 ± 1	8 ± 3	29 ± 2	55 ± 8	–	1 ± 1	Trc.	–	–	97 ± 9
1066.5/1067.0	1438p1	325.2	4 ± 1	2 ± 1	20 ± 2	18 ± 1	53 ± 7	–	1 ± 1	Trc.	–	–	98 ± 8
1083.0/1083.4	1439p1	330.2	4 ± 1	3 ± 1	18 ± 1	21 ± 2	55 ± 8	–	Trc.	Trc.	–	–	101 ± 8
1099.3/1099.6	1440p1	335.2	4 ± 1	2 ± 1	23 ± 2	15 ± 1	54 ± 8	–	1 ± 1	Trc.	–	–	99 ± 8
bottom of hole			**335.3 m**										

Appendix II. Quantitative XRD results for drill core USW NRG-7/7a.

Sample	Depth (m)	LANL #	Smect-ite	Clino-ptilolite	Morden-ite	Tridy-mite	Cristob-alite	Opal-CT	Quartz	Feld-spar	Glass	Hem-atite	Mica	Kaolin-ite	Total
Tiva Canyon Tuff			**0 - 32.3 m**												
19.3/19.5	5.9	#2040p1	–	–	–	3 ± 1	29 ± 2	–	6 ± 1	62 ± 9	–	Trc.	–	–	100 ± 9
39.4/39.5	12.0	#2043p1	1 ± 1	–	–	4 ± 1	31 ± 2	–	–	61 ± 9	–	Trc.	Trc.	–	97 ± 9
59.7/60.0	18.3	#2044p1	–	–	–	2 ± 1	33 ± 2	–	–	60 ± 8	–	1 ± 1	–	–	96 ± 8
71.2/71.5	21.8	#2045p1	29 ± 9	–	–	–	14 ± 1	–	Trc.	28 ± 4	29 ± 9	Trc.	–	–	100 ± 10
90.5/90.7	27.6	#2046p1	6 ± 2	–	–	–	Trc.	–	Trc.	3 ± 1	91 ± 2	–	–	–	100 ± 2
Yucca Mountain Tuff			**32.3 - 53.7 m**												
109.1/109.3	33.3	#2047p1	4 ± 1	–	–	–	–	–	–	Trc.	96 ± 1	–	–	–	100 ± 1
130.5/130.7	39.8	#2048p1	2 ± 1	–	–	–	18 ± 1	–	–	20 ± 3	59 ± 3	1 ± 1	–	–	100 ± 3
161.3/161.4	49.2	#2049p1	11 ± 3	–	–	–	1 ± 1	–	1 ± 1	7 ± 1	80 ± 3	–	–	–	100 ± 3
Pah Canyon Tuff			**53.7 - 85.3 m**												
181.6/181.7	55.4	#2050p1	2 ± 1	–	–	–	1 ± 1	–	1 ± 1	13 ± 2	82 ± 2	–	1 ± 1	–	100 ± 3
203.5/203.8	62.1	#2051p1	Trc.	–	–	–	Trc.	–	1 ± 1	15 ± 2	83 ± 2	Trc.	1 ± 1	–	100 ± 2
222.7/223.0	68.0	#2052p1	–	–	–	–	Trc.	–	1 ± 1	16 ± 2	81 ± 2	Trc.	2 ± 1	–	100 ± 2
245.3/245.7	74.9	#2053p1	8 ± 2	–	–	–	Trc.	–	1 ± 1	10 ± 1	80 ± 2	Trc.	1 ± 1	–	100 ± 3
263.0/263.1	80.2	#2054p1	7 ± 2	–	–	–	2 ± 1	–	3 ± 1	8 ± 1	80 ± 2	Trc.	Trc.	–	100 ± 3
263.9/264.1	80.5	#2055p1	64 ± 19	–	–	–	–	–	1 ± 1	8 ± 1	26 ± 19	1 ± 1	–	–	100 ± 19
Topopah Spring Tuff			**85.3 - 456.6 m**												
281.1/281.2	85.7	#2056p1	1 ± 1	–	–	–	Trc.	–	2 ± 1	18 ± 3	77 ± 3	1 ± 1	1 ± 1	–	100 ± 4
293.9/294.2	89.7	#2057p1	–	–	–	–	–	5 ± 1	1 ± 1	7 ± 1	86 ± 2	1 ± 1	–	–	100 ± 2
297.3/297.6	90.7	#2058p1	Trc.	–	–	–	1 ± 1	–	–	19 ± 3	77 ± 3	2 ± 1	1 ± 1	–	100 ± 3
302.8/303.0	92.4	#2059p1	–	2 ± 1	–	4 ± 1	15 ± 1	–	1 ± 1	66 ± 9	9 ± 9	1 ± 1	1 ± 1	1 ± 1	100 ± 9
321.5/321.7	98.1	#2060p1	–	–	–	5 ± 1	16 ± 1	–	–	73 ± 10	–	1 ± 1	1 ± 1	–	96 ± 10
340.8/342.1	104.3	#2061p1	–	–	–	20 ± 2	9 ± 4	–	–	69 ± 10	–	1 ± 1	1 ± 1	–	100 ± 11
361.7/361.3	110.1	#2062p1	–	–	–	7 ± 1	12 ± 1	–	–	76 ± 11	–	1 ± 1	1 ± 1	–	97 ± 11
385.4/385.5	117.5	#2063p1	Trc.	–	–	6 ± 1	12 ± 1	–	–	77 ± 11	–	1 ± 1	1 ± 1	–	97 ± 11
408.3/408.5	124.5	#2064p1	1 ± 1	–	–	9 ± 1	12 ± 1	–	–	71 ± 10	–	1 ± 1	1 ± 1	–	95 ± 10
430.9/431.1	131.4	#2065p1	3 ± 1	–	–	12 ± 1	9 ± 5	–	–	78 ± 11	–	1 ± 1	1 ± 1	–	104 ± 12
451.6/451.7	137.7	#2066p1	3 ± 1	–	–	14 ± 1	11 ± 1	–	–	70 ± 10	–	1 ± 1	Trc.	–	99 ± 10
473.5/473.6	144.4	#2067p1	3 ± 1	–	–	14 ± 1	12 ± 1	–	1 ± 1	68 ± 10	–	2 ± 1	1 ± 1	–	101 ± 10
487.9/488.2	148.8	#2068p1	7 ± 2	–	–	20 ± 2	12 ± 2	–	1 ± 1	62 ± 9	–	1 ± 1	Trc.	–	103 ± 10

Appendix II. Quantitative XRD results for drill core USW NRG-7/7a (continued).

Sample	Depth (m)	LANL #	Smect-ite	Clino-ptilolite	Morden-ite	Tridy-mite	Cristob-alite	Opal-CT	Quartz	Feld-spar	Glass	Hem-atite	Mica	Kaolin-ite	Total
507.1/507.4	154.7	#2069p1	5 ± 2	–	–	21 ± 2	10 ± 2	–	5 ± 1	60 ± 8	–	1 ± 1	Trc.	–	102 ± 9
528.4/528.7	161.1	#2070p1	4 ± 1	–	–	14 ± 1	18 ± 2	–	5 ± 1	58 ± 8	–	1 ± 1	Trc.	–	100 ± 8
551.3/551.5	168.1	#2071p1	4 ± 1	–	–	10 ± 1	18 ± 2	–	7 ± 1	57 ± 8	–	Trc.	Trc.	–	96 ± 8
569.4/569.7	173.6	#2072p1	5 ± 2	–	–	12 ± 1	15 ± 2	–	11 ± 1	57 ± 8	–	1 ± 1	Trc.	–	101 ± 9
594.8/595.0	181.4	#2073p1	2 ± 1	–	–	9 ± 1	19 ± 2	–	13 ± 1	55 ± 8	–	1 ± 1	–	–	99 ± 8
615.2/615.4	187.6	#2119p1	3 ± 1	–	–	8 ± 1	22 ± 2	–	6 ± 1	57 ± 8	–	1 ± 1	Trc.	–	97 ± 8
634.7/634.8	193.5	#2074p1	4 ± 1	–	–	4 ± 1	29 ± 2	–	7 ± 1	55 ± 8	–	1 ± 1	Trc.	–	100 ± 8
658.9/659.4	201.0	#2075p1	3 ± 1	–	–	11 ± 1	15 ± 2	–	17 ± 1	56 ± 8	–	1 ± 1	Trc.	–	103 ± 8
678.0/678.3	206.7	#2076p1	3 ± 1	–	–	4 ± 1	20 ± 2	–	17 ± 1	53 ± 7	–	Trc.	–	–	97 ± 7
699.3/699.5	213.2	#2077p1	4 ± 1	–	–	4 ± 1	18 ± 1	–	15 ± 1	57 ± 8	–	1 ± 1	Trc.	–	99 ± 8
724.5/724.7	220.9	#2078p1	4 ± 1	–	–	5 ± 1	16 ± 1	–	16 ± 1	59 ± 8	–	1 ± 1	Trc.	–	101 ± 8
745.9/746.3	227.5	#2079p1	3 ± 1	–	–	6 ± 1	16 ± 1	–	20 ± 2	57 ± 8	–	1 ± 1	Trc.	–	103 ± 8
767.9/768.1	234.1	#2080p1	3 ± 1	–	–	3 ± 1	21 ± 2	–	16 ± 1	55 ± 8	–	1 ± 1	Trc.	–	99 ± 8
791.5/792.0	241.4	#2081p1	3 ± 1	–	–	1 ± 1	22 ± 2	–	18 ± 1	52 ± 7	–	Trc.	Trc.	–	96 ± 7
815.3/815.5	248.6	#2082p1	4 ± 1	–	–	2 ± 1	26 ± 2	–	13 ± 1	57 ± 8	–	Trc.	Trc.	–	102 ± 8
837.3/837.6	255.3	#2083p1	3 ± 1	–	–	5 ± 1	9 ± 3	–	29 ± 2	56 ± 8	–	1 ± 1	Trc.	–	103 ± 9
860.1/860.3	262.2	#2084p1	3 ± 1	–	–	Trc.	24 ± 2	–	17 ± 1	53 ± 7	–	–	Trc.	–	97 ± 7
881.8/882.0	268.8	#2085p1	4 ± 1	–	–	7 ± 1	16 ± 1	–	18 ± 1	55 ± 8	–	1 ± 1	Trc.	–	101 ± 8
903.0/903.3	275.3	#2086p1	3 ± 1	–	–	3 ± 1	14 ± 1	–	23 ± 2	54 ± 8	–	Trc.	Trc.	–	97 ± 8
924.9/925.1	282.0	#2087p1	2 ± 1	–	–	–	6 ± 2	–	35 ± 2	55 ± 8	–	Trc.	Trc.	–	98 ± 9
950.8/951.2	289.9	#2088p1	3 ± 1	–	–	1 ± 1	9 ± 3	–	33 ± 2	54 ± 8	–	Trc.	Trc.	–	100 ± 9
973.4/973.6	296.8	#2089p1	2 ± 1	–	–	8 ± 1	11 ± 1	–	24 ± 2	54 ± 8	–	1 ± 1	Trc.	–	100 ± 8
995.4/995.7	303.5	#2090p1	3 ± 1	–	–	4 ± 1	20 ± 2	–	17 ± 1	57 ± 8	–	Trc.	Trc.	–	101 ± 8
1005.0/1005.5	306.5	#2091p1	3 ± 1	–	–	2 ± 1	17 ± 1	–	21 ± 2	55 ± 8	–	Trc.	Trc.	–	98 ± 8
1028.0/1028.2	313.4	#2092p1	1 ± 1	–	–	1 ± 1	24 ± 2	–	15 ± 1	56 ± 8	–	1 ± 1	–	–	98 ± 8
1050.2/1050.5	320.2	#2093p1	2 ± 1	–	–	6 ± 1	22 ± 2	–	14 ± 1	54 ± 8	–	Trc.	Trc.	–	98 ± 8
1076.3/1076.5	328.1	#2094p1	1 ± 1	–	–	2 ± 1	12 ± 1	–	27 ± 2	54 ± 8	–	Trc.	Trc.	–	96 ± 8
1099.7/1100.1	335.3	#2095p1	2 ± 1	–	–	2 ± 1	10 ± 1	–	32 ± 2	55 ± 8	–	Trc.	Trc.	–	101 ± 8
1123.2/1123.3	342.4	#2096p1	–	–	–	4 ± 1	13 ± 1	–	27 ± 2	55 ± 8	–	Trc.	Trc.	–	99 ± 8
1146.7/1146.9	349.6	#2097p1	2 ± 1	–	–	7 ± 1	13 ± 1	–	21 ± 2	56 ± 8	–	1 ± 1	Trc.	–	100 ± 8
1164.2/1164.7	355.0	#2098p1	1 ± 1	–	–	5 ± 1	22 ± 2	–	14 ± 1	56 ± 8	–	Trc.	Trc.	–	98 ± 8
1186.7/1187.4	361.9	#2099p1	1 ± 1	–	–	3 ± 1	11 ± 1	–	29 ± 2	57 ± 8	–	Trc.	Trc.	–	101 ± 8
1205.9/1206.2	367.6	#2100p1	2 ± 1	–	–	2 ± 1	10 ± 1	–	30 ± 2	57 ± 8	–	Trc.	Trc.	–	101 ± 8

Appendix II. Quantitative XRD results for drill core USW NRG-7/7a (continued).

Sample	Depth (m)	LANL #	Smect-ite	Clino-ptilolite	Morden-ite	Tridy-mite	Cristob-alite	Opal-CT	Quartz	Feld-spar	Glass	Hem-atite	Mica	Kaolin-ite	Total
1227.7/1228.5	374.4	#2101p1	2 ± 1	–	–	2 ± 1	9 ± 3	–	30 ± 2	54 ± 8	–	Trc.	Trc.	–	97 ± 9
1250.0/1250.1	381.0	#2102p1	2 ± 1	–	–	3 ± 1	10 ± 1	–	29 ± 2	54 ± 8	–	1 ± 1	Trc.	–	99 ± 8
1273.9/1274.0	388.3	#2103p1	2 ± 1	–	–	3 ± 1	11 ± 1	–	29 ± 2	56 ± 8	–	Trc.	Trc.	–	101 ± 8
1294.6/1294.8	394.7	#2104p1	2 ± 1	–	–	–	8 ± 3	–	33 ± 2	57 ± 8	–	Trc.	Trc.	–	100 ± 9
1318.5/1318.9	402.0	#2105p1	2 ± 1	–	–	–	13 ± 1	–	30 ± 2	56 ± 8	–	1 ± 1	Trc.	–	102 ± 8
1340.1/1340.3	408.5	#2106p1	2 ± 1	–	–	Trc.	18 ± 1	–	23 ± 2	55 ± 8	–	Trc.	Trc.	–	98 ± 8
1359.7/1360.0	414.5	#2107p1	2 ± 1	–	–	–	16 ± 1	–	27 ± 2	53 ± 7	–	Trc.	Trc.	–	98 ± 7
1370.1/1370.4	417.7	#2108p1	2 ± 1	–	–	–	20 ± 2	–	24 ± 2	51 ± 7	–	Trc.	Trc.	–	97 ± 8
1379.9/1380.4	420.7	#2109p1	2 ± 1	–	–	4 ± 1	23 ± 2	–	13 ± 1	54 ± 8	–	Trc.	Trc.	–	96 ± 8
1391.9/1392.4	424.4	#2110p1	2 ± 1	1 ± 1	–	1 ± 1	16 ± 1	–	25 ± 2	53 ± 7	–	Trc.	Trc.	–	98 ± 8
1402.0/1402.1	427.4	#2111p1	2 ± 1	2 ± 1	–	2 ± 1	23 ± 2	–	15 ± 1	52 ± 7	–	Trc.	Trc.	–	96 ± 8
1409.5/1409.6	429.6	#2112p1	–	–	–	4 ± 1	2Q ± 2	–	21 ± 2	51 ± 7	–	–	Trc.	–	96 ± 8
1411.5/1411.8	430.3	#2113p1	21 ± 6	29 ± 3	1 ± 1	–	–	35 ± 10	1 ± 1	18 ± 3	–	–	Trc.	–	105 ± 12
1416.4/1416.8	431.8	#2114p1	4 ± 1	1 ± 1	1 ± 1	–	–	5 ± 1	1 ± 1	9 ± 1	79 ± 2	–	Trc.	–	100 ± 2
1425.8/1425.9	434.6	#2115p1	Trc.	–	–	–	–	3 ± 1	Trc.	4 ± 1	93 ± 1	–	Trc.	–	100 ± 1
1437.0/1437.2	438.1	#2116p1	–	1 ± 1	–	–	–	3 ± 1	1 ± 1	6 ± 1	89 ± 2	–	Trc.	–	100 ± 2
1451.2/1451.3	442.4	#1880p1	–	–	–	–	–	–	1 ± 1	3 ± 1	96 ± 1	–	Trc.	–	100 ± 1
1459.3/1459.5	444.9	#1881p1	3 ± 1	1 ± 1	–	–	–	5 ± 1	1 ± 1	6 ± 1	84 ± 2	–	Trc.	–	100 ± 2
1463.5/1464.0	446.2	#1882p1	5 ± 2	2 ± 1	–	–	–	4 ± 1	Trc.	4 ± 1	85 ± 2	–	Trc.	–	100 ± 3
1470.0/1470.2	448.1	#1883p1	8 ± 2	5 ± 1	–	–	–	5 ± 1	–	4 ± 1	78 ± 2	–	Trc.	–	100 ± 3
1475.0/1475.4	449.7	#1884p1	8 ± 2	71 ± 6	–	–	–	24 ± 5	1 ± 1	1 ± 1	–	–	–	–	105 ± 8
1481.1/1481.2	451.5	#1885p1	2 ± 1	77 ± 6	–	–	–	23 ± 5	1 ± 1	2 ± 1	–	–	Trc.	–	105 ± 8
1485.5/1485.7	452.8	#1886p1	2 ± 1	79 ± 6	–	–	–	18 ± 4	2 ± 1	6 ± 1	–	–	Trc.	–	107 ± 7
1492.0/1492.2	454.8	#1888p1	Trc.	78 ± 6	1 ± 1	–	–	16 ± 4	3 ± 1	7 ± 2	–	–	Trc.	–	105 ± 8
Calico Hills Formation			**455.0 m - bottom**												
1495.9/1496.2	456.0	#1887p1	2 ± 1	67 ± 6	2 ± 1	–	–	14 ± 4	5 ± 1	13 ± 3	–	–	Trc.	–	103 ± 8
1499.4/1499.7	457.1	#2117p1	1 ± 1	80 ± 6	–	–	–	13 ± 3	2 ± 1	8 ± 2	–	–	–	–	104 ± 7
1513.0/1513.4	461.3	#2118p1	Trc.	84 ± 6	–	–	–	7 ± 2	4 ± 1	7 ± 2	–	–	Trc.	–	102 ± 7
Bottom			**461.3 m**												

Appendix III. Quantitative XRD results for drill core USW SD-7.

Sample	Depth (m)	LANL #	Smect-ite	Clino-ptilolite	Morden-ite	Chab-azite	Tridy-mite	Cristob-alite	Opal-CT	Quartz	Feld-spar	Glass	Hem-atite	Mica	Other	Total
Tiva Canyon Tuff (Tpc)			**15.2 - 111.6 m**													
Topopah Spring Tuff (Tpt)			**111.6 - 411.8 m**													
369.3/369.7	112.7	2532p1	15 ± 5	–	–	–	11 ± 1	10 ± 1	–	1 ± 1	59 ± 8	–	2 ± 1	Trc.	–	98 ± 10
386.1/386.2	117.7	2533p1	8 ± 2	–	–	–	12 ± 1	19 ± 2	–	4 ± 1	54 ± 8	–	1 ± 1	Trc.	–	98 ± 9
387.0/387.1	118.0	2534p1	Trc.	–	–	–	9 ± 1	20 ± 2	–	3 ± 1	63 ± 9	–	1 ± 1	Trc.	–	96 ± 9
388.1/388.2	118.3	2535p1	–	–	–	–	2 ± 1	15 ± 1	–	1 ± 1	76 ± 11	–	2 ± 1	1 ± 1	–	97 ± 11
392.1/392.3	119.6	2536p1	–	–	–	–	2 ± 1	16 ± 1	–	–	79 ± 11	–	1 ± 1	1 ± 1	–	99 ± 11
397.5/397.6	121.2	2537p1	–	–	–	–	5 ± 1	14 ± 1	–	–	73 ± 10	–	1 ± 1	1 ± 1	–	94 ± 10
415.9/416.1	126.8	2538p1	Trc.	–	–	–	8 ± 1	12 ± 1	–	Trc.	79 ± 11	–	1 ± 1	1 ± 1	–	101 ± 11
438.6/438.9	133.8	2539p1	1 ± 1	–	–	–	13 ± 1	11 ± 1	–	–	73 ± 10	–	1 ± 1	Trc.	–	99 ± 10
462.8/463.1	141.2	2540p1	1 ± 1	–	–	–	16 ± 2	11 ± 1	–	1 ± 1	70 ± 10	–	1 ± 1	Trc.	Trc.[1]	100 ± 10
487.8/487.9	148.7	2541p1	3 ± 1	–	–	–	20 ± 2	10 ± 2	–	Trc.	67 ± 9	–	1 ± 1	Trc.	–	101 ± 10
511.8/512.0	156.1	2542p1	4 ± 1	–	–	–	21 ± 2	9 ± 4	–	1 ± 1	63 ± 9	–	1 ± 1	Trc.	–	99 ± 10
533.3/533.5	162.6	2543p1	4 ± 1	–	–	–	11 ± 1	26 ± 3	–	1 ± 1	54 ± 8	–	1 ± 1	Trc.	–	97 ± 9
556.8/557.4	169.9	2544p1	2 ± 1	–	–	–	12 ± 1	21 ± 2	–	1 ± 1	63 ± 9	–	1 ± 1	Trc.	–	100 ± 9
582.5/582.6	177.6	2545p1	4 ± 1	–	–	–	5 ± 1	34 ± 3	–	1 ± 1	55 ± 8	–	1 ± 1	Trc.	–	100 ± 9
607.3/607.5	185.2	2546p1	4 ± 1	–	–	–	9 ± 1	25 ± 2	–	7 ± 1	53 ± 7	–	Trc.	Trc.	–	98 ± 7
631.5/631.7	192.5	2547p1	3 ± 1	–	–	–	4 ± 1	32 ± 2	–	5 ± 1	55 ± 8	–	Trc.	Trc.	–	99 ± 8
656.4/656.6	200.1	2548p1	2 ± 1	–	–	–	–	11 ± 1	–	33 ± 2	53 ± 7	–	Trc.	Trc.	–	99 ± 7
682.5/683.1	208.2	2549p1	4 ± 1	–	–	–	2 ± 1	25 ± 2	–	15 ± 1	53 ± 7	–	Trc.	Trc.	–	99 ± 7
703.8/704.3	214.7	2550p1	3 ± 1	–	–	–	2 ± 1	35 ± 2	–	4 ± 1	53 ± 7	–	–	Trc.	–	97 ± 7
725.1/725.7	221.2	2551p1	5 ± 2	–	–	–	4 ± 1	31 ± 2	–	5 ± 1	52 ± 7	–	–	Trc.	–	97 ± 8
749.3/749.6	228.5	2552p1	3 ± 1	–	–	–	4 ± 1	35 ± 2	–	2 ± 1	52 ± 7	–	Trc.	Trc.	–	96 ± 7
775.2/775.8	236.5	2553p1	5 ± 2	–	–	–	3 ± 1	34 ± 2	–	3 ± 1	52 ± 7	–	–	Trc.	–	97 ± 8
800.3/800.5	244.0	2554p1	3 ± 1	–	–	–	2 ± 1	35 ± 2	–	3 ± 1	54 ± 8	–	Trc.	Trc.	–	97 ± 8
825.0/825.7	251.7	2555p1	4 ± 1	–	–	–	5 ± 1	20 ± 2	–	18 ± 1	53 ± 7	–	Trc.	Trc.	–	100 ± 7
848.1/848.4	258.6	2556p1	4 ± 1	–	–	–	5 ± 1	14 ± 1	–	24 ± 2	54 ± 8	–	Trc.	Trc.	–	101 ± 8
875.7/876.0	267.0	2557p1	3 ± 1	–	–	–	4 ± 1	34 ± 2	–	4 ± 1	53 ± 7	–	1 ± 1	Trc.	–	99 ± 8
898.4/898.6	273.9	2558p1	4 ± 1	–	–	–	3 ± 1	25 ± 2	–	11 ± 1	52 ± 7	–	1 ± 1	Trc.	–	96 ± 8
924.4/924.7	281.8	2559p1	5 ± 2	–	–	–	8 ± 1	23 ± 2	–	11 ± 1	55 ± 8	–	Trc.	Trc.	–	102 ± 9
946.0/946.4	288.5	2560p1	5 ± 2	–	–	–	3 ± 1	12 ± 1	–	29 ± 2	55 ± 8	–	Trc.	Trc.	–	104 ± 9
966.2/966.9	294.7	2561p1	5 ± 2	–	–	–	3 ± 1	12 ± 1	–	26 ± 2	51 ± 7	–	Trc.	Trc.	–	97 ± 8

Appendix III. Quantitative XRD results for drill core USW SD-7 (continued).

Sample	Depth (m)	LANL #	Smect-ite	Clino-ptilolite	Morden-ite	Chab-azite	Tridy-mite	Cristob-alite	Opal-CT	Quartz	Feld-spar	Glass	Hem-atite	Mica	Other	Total
974.3/974.5	297.0	2562p1	6 ± 2	–	–	–	3 ± 1	22 ± 2	–	18 ± 1	51 ± 7	–	1 ± 1	Trc.	–	101 ± 8
993.4/994.3	303.1	2563p1	3 ± 1	–	–	–	10 ± 1	9 ± 3	–	24 ± 2	55 ± 8	–	1 ± 1	Trc.	–	102 ± 9
1013.5/1014.3	309.2	2564p1	2 ± 1	–	–	–	3 ± 1	23 ± 2	–	17 ± 1	54 ± 8	–	1 ± 1	Trc.	–	100 ± 8
1032.1/1032.3	314.6	2565p1	4 ± 1	–	–	–	3 ± 1	21 ± 2	–	19 ± 1	56 ± 8	–	Trc.	Trc.	–	103 ± 8
1053.5/1054.2	321.3	2566p1	3 ± 1	–	–	–	7 ± 1	11 ± 1	–	26 ± 2	52 ± 7	–	1 ± 1	Trc.	–	100 ± 8
1073.0/1073.6	327.2	2567p1	3 ± 1	–	–	–	1 ± 1	20 ± 2	–	20 ± 2	53 ± 7	–	Trc.	Trc.	–	97 ± 8
1091.9/1092.2	332.9	2568p1	3 ± 1	–	–	–	–	18 ± 1	–	25 ± 2	55 ± 8	–	Trc.	Trc.	–	101 ± 8
1115.1/1115.4	340.0	2569p1	4 ± 1	–	–	–	–	19 ± 1	–	22 ± 2	53 ± 7	–	Trc.	Trc.	–	98 ± 7
1133.3/1133.4	345.5	2014p1	5 ± 2	–	–	–	1 ± 1	20 ± 2	–	18 ± 1	53 ± 7	–	Trc.	Trc.	–	97 ± 8
1156.7/1156.9	352.6	2015p1	7 ± 2	–	–	–	–	16 ± 1	–	23 ± 2	50 ± 7	–	Trc.	Trc.	–	96 ± 8
1161.5/1161.6	354.1	2016p1	4 ± 1	–	–	–	1 ± 1	10 ± 1	–	30 ± 2	53 ± 7	–	Trc.	Trc.	–	98 ± 7
1165.0/1165.1	355.1	2017p1	6 ± 2	–	–	–	–	18 ± 1	–	24 ± 2	52 ± 7	–	Trc.	Trc.	–	100 ± 8
1169.9/1170.0	356.6	2018p1	6 ± 2	–	–	–	–	11 ± 1	–	29 ± 2	51 ± 7	–	Trc.	Trc.	–	97 ± 8
1175.1/1175.4	358.3	2019p1	6 ± 2	–	–	–	–	16 ± 1	–	25 ± 2	51 ± 7	–	Trc.	Trc.	–	98 ± 8
1179.5/1179.7	359.6	2020p1	5 ± 2	–	–	1 ± 1	–	18 ± 1	–	21 ± 2	51 ± 7	–	Trc.	Trc.	–	96 ± 8
1181.6/1182.0	360.3	2021p1	7 ± 2	–	–	1 ± 1	2 ± 1	17 ± 1	–	20 ± 2	49 ± 7	–	Trc.	Trc.	–	96 ± 8
1187.0/1187.1	361.8	2022p1	59 ± 18	–	–	5 ± 1	–	–	22 ± 6	1 ± 1	15 ± 2	–	–	–	–	102 ± 19
1191.1/1191.3	363.1	2023p1	19 ± 6	38 ± 3	–	5 ± 1	–	–	25 ± 7	7 ± 1	14 ± 2	–	–	Trc.	–	108 ± 10
1193.4/1193.5	363.8	2024p1	6 ± 2	–	–	–	–	–	21 ± 6	1 ± 1	15 ± 2	57 ± 6	–	Trc.	–	100 ± 7
1201.7/1201.9	366.3	2025p1	1 ± 1	–	–	–	–	–	17 ± 5	1 ± 1	14 ± 2	67 ± 5	–	Trc.	–	100 ± 6
1213.5/1213.7	369.9	2026p1	1 ± 1	–	–	–	–	–	17 ± 4	1 ± 1	12 ± 2	69 ± 4	–	Trc.	–	100 ± 5
1230.7/1230.9	375.2	2027p1	1 ± 1	–	–	–	–	–	12 ± 3	2 ± 1	9 ± 1	76 ± 3	–	Trc.	–	100 ± 3
1245.5/1246.0	379.8	2028p1	Trc.	–	–	–	–	–	10 ± 2	1 ± 1	9 ± 1	80 ± 2	–	Trc.	–	100 ± 2
1260.2/1260.3	384.1	2029p1	Trc.	–	–	–	–	–	9 ± 2	1 ± 1	7 ± 1	83 ± 2	–	Trc.	–	100 ± 2
1278.6/1278.9	389.8	2030p1	1 ± 1	–	–	–	–	–	18 ± 5	1 ± 1	13 ± 2	67 ± 5	–	Trc.	–	100 ± 6
1298.8/1299.0	395.9	2031p1	2 ± 1	–	–	–	–	–	14 ± 4	1 ± 1	12 ± 2	71 ± 4	–	Trc.	Trc.[1]	100 ± 5
1299.7/1299.8	396.2	2468p1	1 ± 1	–	–	–	–	–	8 ± 2	1 ± 1	8 ± 1	82 ± 2	–	Trc.	–	100 ± 3
1321.5/1321.6	402.8	2032p1	Trc.	–	–	–	–	–	4 ± 1	2 ± 1	7 ± 1	87 ± 1	–	Trc.	–	100 ± 2
1338.5/1338.7	408.0	2033p1	Trc.	–	–	–	–	–	2 ± 1	1 ± 1	3 ± 1	94 ± 1	–	Trc.	–	100 ± 2
1350.5/1350.7	411.7	2034p1	Trc.	1 ± 1	–	–	–	–	16 ± 5	5 ± 1	20 ± 3	52 ± 6	–	Trc.	6 ± 1[2]	100 ± 6

Appendix III. Quantitative XRD results for drill core USW SD-7 (continued).

Sample	Depth (m)	LANL #	Smect-ite	Clino-ptilolite	Morden-ite	Chab-azite	Tridy-mite	Cristob-alite	Opal-CT	Quartz	Feld-spar	Glass	Hem-atite	Mica	Other	Total
Pre-Tpt bedded tuff			**411.8 - 421.0 m**													
Calico Hills Formation (Ta)			**421.0 - 477.7 m**													
1391.0/1391.2	424.0	2035p1	1 ± 1	–	–	–	–	–	2 ± 1	3 ± 1	6 ± 1	85 ± 2	–	Trc.	3 ± 1[2]	100 ± 2
1421.1/1421.3	433.2	2297p1	Trc.	–	–	–	–	–	2 ± 1	1 ± 1	6 ± 1	91 ± 1	–	–	–	100 ± 2
1444.6/1444.8	440.4	2298p1	Trc.	–	–	–	–	–	2 ± 1	2 ± 1	6 ± 1	90 ± 1	–	–	–	100 ± 2
1467.4/1457.5	444.2	2299p1	Trc.	1 ± 1	–	Trc.	–	–	3 ± 1	3 ± 1	7 ± 1	86 ± 2	–	Trc.	–	100 ± 2
1471.5/1471.8	448.6	2300p1	Trc.	1 ± 1	–	Trc.	–	–	2 ± 1	4 ± 1	8 ± 1	85 ± 2	–	Trc.	–	100 ± 2
1493.2/1493.6	455.2	2301p1	11 ± 3	14 ± 1	–	3 ± 1	–	–	5 ± 1	4 ± 1	10 ± 2	53 ± 4	–	Trc.	–	100 ± 4
1493.2/1493.6b	455.2	2301p2	Trc.	45 ± 4	–	5 ± 1	–	–	26 ± 7	7 ± 1	14 ± 3	–	–	Trc.	–	97 ± 9
1513.9/1514.2	461.5	2302p1	2 ± 1	6 ± 1	–	1 ± 1	–	–	5 ± 1	4 ± 1	8 ± 1	74 ± 2	–	Trc.	–	100 ± 2
1517.3/1517.6	462.6	2303p1	5 ± 2	2 ± 1	–	1 ± 1	–	–	5 ± 1	7 ± 1	16 ± 2	63 ± 3	–	1 ± 1	–	100 ± 4
1519.1/1519.3	463.1	2304p1	Trc.	60 ± 5	–	9 ± 2	–	–	19 ± 4	5 ± 1	6 ± 1	–	–	Trc.	–	99 ± 7
1538.5/1538.6	469.0	2305p1	3 ± 1	14 ± 1	3 ± 1	2 ± 1	–	–	10 ± 2	4 ± 1	8 ± 1	56 ± 3	–	Trc.	–	100 ± 3
1560.1/1560.5	475.6	2306p1	5 ± 2	21 ± 2	6 ± 2	–	–	–	9 ± 2	3 ± 1	7 ± 1	49 ± 4	–	–	–	100 ± 4
Pre-Ta bedded-tuff			**477.7 - 495.9 m**													
1567.1/1567.3	477.7	2307p1	5 ± 2	68 ± 5	–	–	–	–	17 ± 4	4 ± 1	9 ± 2	–	–	Trc.	–	103 ± 7
1567.1/1567.3b	477.7	2307p2	1 ± 1	49 ± 5	–	–	–	–	33 ± 8	7 ± 1	10 ± 2	–	–	–	–	100 ± 10
1581.2/1581.5	482.0	2308p1	5 ± 2	49 ± 3	–	5 ± 1	–	–	8 ± 2	6 ± 1	12 ± 2	14 ± 4	–	1 ± 1	–	100 ± 5
1581.2/1581.8b	482.1	2308p2	1 ± 1	53 ± 5	–	–	–	–	37 ± 8	6 ± 1	5 ± 1	–	–	Trc.	–	102 ± 10
1597.1/1597.4	486.9	2309p1	3 ± 1	46 ± 4	–	–	–	–	25 ± 7	11 ± 1	19 ± 4	–	–	1 ± 1	–	105 ± 9
1601.5/1601.8	488.2	2310p1	3 ± 1	50 ± 4	–	–	–	–	15 ± 5	12 ± 1	22 ± 4	–	–	1 ± 1	–	103 ± 8
1618.1/1618.2	493.2	2311p1	7 ± 2	55 ± 4	–	–	–	–	12 ± 4	5 ± 1	24 ± 5	–	–	Trc.	Trc.[1]	103 ± 8
1622.6/1622.9	494.7	2312p1	8 ± 2	54 ± 5	–	–	–	–	25 ± 7	4 ± 1	13 ± 3	–	–	–	–	104 ± 9
Prow Pass Tuff (Tcp)			**495.9 - 660.7 m**													
1636.5/1636.8	498.9	2313p1	7 ± 2	46 ± 4	–	–	–	–	35 ± 9	2 ± 1	12 ± 2	–	–	–	–	102 ± 10
1647.7/1647.9	502.3	2314p1	1 ± 1	–	–	–	4 ± 1	35 ± 2	–	3 ± 1	51 ± 7	–	1 ± 1	–	–	95 ± 8
1666.6/1666.8	508.0	2315p1	2 ± 1	–	–	–	1 ± 1	7 ± 2	–	30 ± 2	55 ± 8	–	2 ± 1	Trc.	–	97 ± 9
1688.2/1688.4	514.6	2316p1	2 ± 1	–	–	–	3 ± 1	2 ± 1	–	33 ± 2	56 ± 8	–	1 ± 1	Trc.	–	97 ± 8
1718.7/1718.9	523.9	2317p1	2 ± 1	–	–	–	5 ± 1	2 ± 1	–	32 ± 2	55 ± 8	–	1 ± 1	Trc.	–	97 ± 8
1741.0/1741.3	530.7	2318p1	1 ± 1	–	–	–	6 ± 1	3 ± 1	–	28 ± 2	57 ± 8	–	1 ± 1	Trc.	–	96 ± 8
1765.9/1766.3	538.4	2319p1	1 ± 1	–	–	–	2 ± 1	7 ± 2	–	29 ± 2	59 ± 8	–	Trc.	Trc.	–	98 ± 9
1787.1/1787.2	544.7	2320p1	1 ± 1	–	–	–	–	15 ± 1	–	25 ± 2	58 ± 8	–	Trc.	Trc.	–	99 ± 8

Appendix III. Quantitative XRD results for drill core USW SD-7 (continued).

Sample	Depth (m)	LANL #	Smect-ite	Clino-ptilolite	Morden-ite	Chab-azite	Tridy-mite	Cristob-alite	Opal-CT	Quartz	Feld-spar	Glass	Hem-atite	Mica	Other	Total
1796.7/1797.0	547.7	2321p1	2 ± 1	–	–	–	–	16 ± 1	–	19 ± 1	61 ± 9	–	Trc.	Trc.	–	98 ± 9
1824.6/1824.9	556.2	2322p1	2 ± 1	–	–	–	–	26 ± 2	–	12 ± 1	57 ± 8	–	Trc.	Trc.	–	97 ± 8
1843.4/1843.7	562.0	2323p1	3 ± 1	–	–	–	–	30 ± 2	–	7 ± 1	57 ± 8	–	Trc.	Trc.	–	97 ± 8
1867.5/1868.1	569.4	2324p1	2 ± 1	35 ± 2	–	–	–	21 ± 2	–	6 ± 1	39 ± 7	–	–	Trc.	–	103 ± 8
1893.8/1894.1	577.3	2325p1	5 ± 2	29 ± 3	–	–	–	–	36 ± 12	3 ± 1	29 ± 5	–	–	–	Trc.[1]	102 ± 14
1913.4/1914.9	583.7	2326p1	4 ± 1	42 ± 4	3 ± 1	–	–	–	28 ± 9	4 ± 1	23 ± 5	–	–	–	–	104 ± 11
1938.5/1938.7	590.9	2327p1	1 ± 1	53 ± 6	6 ± 2	–	–	–	20 ± 6	5 ± 1	20 ± 4	–	–	–	–	105 ± 10
1962.8/1963.1	598.4	2328p1	2 ± 1	60 ± 6	5 ± 2	–	–	–	14 ± 4	4 ± 1	20 ± 5	–	–	–	–	105 ± 9
1988.6/1989.0	606.2	2329p1	3 ± 1	54 ± 7	12 ± 4	–	–	–	18 ± 5	3 ± 1	15 ± 4	–	–	Trc.	–	105 ± 10
2010.2/2010.5	612.8	2330p1	1 ± 1	82 ± 6	–	–	–	–	12 ± 3	Trc.	10 ± 2	–	–	–	–	105 ± 7
2021.3/2021.6	616.2	2331p1	2 ± 1	68 ± 5	–	–	–	–	19 ± 5	2 ± 1	14 ± 3	–	–	–	–	105 ± 8
2035.1/2035.3	620.4	2332p1	2 ± 1	56 ± 7	10 ± 3	–	–	–	16 ± 5	3 ± 1	18 ± 4	–	–	–	–	105 ± 10
2043.8/2044.0	623.0	2333p1	2 ± 1	61 ± 7	7 ± 2	–	–	–	14 ± 4	2 ± 1	18 ± 4	–	–	–	–	104 ± 9
2062.6/2062.8	628.7	2334p1	1 ± 1	49 ± 8	17 ± 5	–	–	–	17 ± 5	3 ± 1	17 ± 5	–	–	–	–	104 ± 12
2082.8/2083.1	634.9	2335p1	1 ± 1	53 ± 8	15 ± 5	–	–	–	15 ± 4	2 ± 1	17 ± 5	–	–	–	–	103 ± 11
2094.2/2094.6	638.4	2336p1	1 ± 1	39 ± 9	30 ± 8	–	–	–	13 ± 4	4 ± 1	17 ± 6	–	–	–	–	104 ± 14
2109.6/2109.9	643.1	2337p1	1 ± 1	53 ± 9	18 ± 6	–	–	–	13 ± 4	2 ± 1	19 ± 5	–	–	–	–	106 ± 13
2133.7/2133.9	650.4	2338p1	1 ± 1	60 ± 9	16 ± 5	–	–	–	11 ± 3	2 ± 1	14 ± 4	–	–	–	–	104 ± 12
2159.6/2159.8	658.3	2339p1	2 ± 1	52 ± 8	15 ± 5	–	–	–	12 ± 3	5 ± 1	18 ± 5	–	–	–	–	104 ± 11
2159.5/2159.8	658.3	2339p2	3 ± 1	51 ± 7	14 ± 5	–	–	–	15 ± 4	4 ± 1	16 ± 4	–	–	–	–	103 ± 10
Pre-Tcp bedded tuff			**660.7 - 664.5 m**													
2179.2/2179.4	664.3	2340p1	4 ± 1	34 ± 2	–	–	–	–	2 ± 1	7 ± 1	50 ± 9	–	–	2 ± 1	–	99 ± 9
2179.2/2179.4	664.3	2340p2	7 ± 2	33 ± 2	–	–	–	Trc.	–	4 ± 1	53 ± 9	–	–	3 ± 1	–	100 ± 10
2180.0/2180.2	664.5	2341p1	Trc.	–	–	–	–	5 ± 2	–	34 ± 2	56 ± 8	–	1 ± 1	1 ± 1	–	97 ± 9
2180.0/2180.2	664.5	2341p2	1 ± 1	–	–	–	–	5 ± 2	–	40 ± 2	51 ± 7	–	1 ± 1	1 ± 1	–	99 ± 8
Bullfrog Tuff (Tcb)			**664.5 - 786.2 m**													
static water level			**665.7 m**													
2201.7/2201.9	671.1	2342p1	1 ± 1	–	–	–	–	19 ± 1	–	18 ± 1	62 ± 9	–	1 ± 1	1 ± 1	–	102 ± 9
2201.7/2201.9	671.1	2342p2	3 ± 1	–	–	–	–	20 ± 2	–	18 ± 1	59 ± 8	–	1 ± 1	1 ± 1	–	102 ± 8
2225.3/2225.4	678.3	2343p1	2 ± 1	–	–	–	–	19 ± 1	–	18 ± 1	59 ± 8	–	1 ± 1	1 ± 1	–	100 ± 8
2225.3/2225.4	678.3	2343p2	3 ± 1	–	–	–	–	17 ± 1	–	19 ± 1	62 ± 9	–	1 ± 1	2 ± 1	–	104 ± 9
2250.8/2251.0	686.1	2344p1	2 ± 1	–	–	–	–	19 ± 1	–	16 ± 1	63 ± 9	–	1 ± 1	2 ± 1	–	103 ± 9

Appendix III. Quantitative XRD results for drill core USW SD-7 (continued).

Sample	Depth (m)	LANL #	Smect-ite	Clino-ptilolite	Morden-ite	Chab-azite	Tridy-mite	Cristob-alite	Opal-CT	Quartz	Feld-spar	Glass	Hem-atite	Mica	Other	Total
2275.1/2275.3	693.5	2345p1	2 ± 1	–	–	–	–	19 ± 1	–	20 ± 2	56 ± 8	–	1 ± 1	1 ± 1	–	99 ± 8
2302.3/2302.6	701.8	2346p1	2 ± 1	–	–	–	–	18 ± 1	–	19 ± 1	61 ± 9	–	1 ± 1	1 ± 1	–	102 ± 9
2324.4/2324.7	708.6	2347p1	2 ± 1	–	–	–	–	21 ± 2	–	18 ± 1	60 ± 8	–	1 ± 1	1 ± 1	–	103 ± 8
2350.4/2350.8	716.5	2348p1	2 ± 1	–	–	–	–	19 ± 1	–	21 ± 2	56 ± 8	–	Trc.	1 ± 1	–	99 ± 8
2358.2/2358.3	718.8	2349p1	2 ± 1	Trc.	–	–	–	16 ± 1	–	27 ± 2	56 ± 8	–	Trc.	1 ± 1	–	102 ± 8
2374.3/2374.5	723.7	2350p1	2 ± 1	–	–	–	–	14 ± 1	–	24 ± 2	60 ± 8	–	Trc.	1 ± 1	–	101 ± 8
2401.3/2402.5	732.3	2351p1	3 ± 1	–	–	–	–	12 ± 1	–	24 ± 2	62 ± 9	–	Trc.	2 ± 1	–	103 ± 9
2426.6/2426.8	739.7	2352p1	1 ± 1	–	–	–	–	16 ± 1	–	22 ± 2	59 ± 8	–	Trc.	1 ± 1	–	99 ± 8
2453.9/2454.1	748.0	2353p1	2 ± 1	–	–	–	–	13 ± 1	–	26 ± 2	58 ± 8	–	1 ± 1	1 ± 1	–	101 ± 8
2478.1/2478.5[a]	755.4	2354p1	37 ± 11	17 ± 1	–	–	–	2 ± 1	–	6 ± 1	34 ± 5	–	1 ± 1	1 ± 1	Trc.[1]	98 ± 12
2478.1/2478.5	755.4	2354p2	5 ± 2	–	47 ± 15	–	–	–	–	11 ± 1	38 ± 14	–	–	Trc.	Trc.[1]	101 ± 21
2501.6/2501.9	762.6	2355p1	2 ± 1	49 ± 4	2 ± 1	–	–	–	19 ± 6	4 ± 1	26 ± 5	–	–	Trc.	Trc.[1]	102 ± 9
2524.7/2524.9	769.6	2356p1	2 ± 1	61 ± 5	4 ± 1	–	–	2 ± 1	–	3 ± 1	25 ± 6	–	–	1 ± 1	Trc.[1]	98 ± 8
2549.3/2549.5	777.1	2357p1	Trc.	57 ± 9	21 ± 6	–	–	–	–	3 ± 1	19 ± 6	–	–	1 ± 1	Trc.[1]	101 ± 12
2575.6/2575.9	785.1	2358p1	Trc.	55 ± 10	24 ± 7	–	–	4 ± 1	–	2 ± 1	15 ± 5	–	–	1 ± 1	–	101 ± 13
Pre-Tcb bedded tuff			**786.2 - 792.8 m**													
2595.8/2596.0	791.3	2359p1	5 ± 2	34 ± 5	14 ± 5	–	–	–	12 ± 4	10 ± 1	28 ± 7	–	–	1 ± 1	–	104 ± 11
Tram Tuff (Tct)			**792.8 m - bottom**													
2621.3/2621.7	799.1	2360p1	2 ± 1	43 ± 6	11 ± 3	–	–	–	20 ± 6	4 ± 1	21 ± 5	–	–	3 ± 1	–	104 ± 10
2649.8/2649.9	807.7	2361p1	2 ± 1	36 ± 5	12 ± 4	–	–	–	15 ± 5	7 ± 1	29 ± 7	–	–	3 ± 1		104 ± 11
2674.7/2675.0	815.3	2362p1	Trc.	43 ± 4	2 ± 1	–	–	–	20 ± 7	5 ± 1	30 ± 6	–	–	2 ± 1	–	102 ± 10
Bottom			**815.3 m**													

[1]Hornblende
[2]Calcite
[a]Breccia

Appendix IV. Quantitative XRD results for drill core USW SD-9.

Sample	Depth (m)	LANL #	Smect-ite	Clino-ptilolite	Morden-ite	Tridy-mite	Cristob-alite	Opal-CT	Quartz	Feld-spar	Glass	Hem-atite	Mica	Horn-blende	Total
Topopah Spring Tuff (Tpt) 77.9 - 446.3 m															
1364.0/1364.1	415.8	2469p1	Trc.	1 ± 1	–	3 ± 1	28 ± 2	–	11 ± 1	54 ± 8	–	–	Trc.	–	97 ± 8
1364.3/1364.4	415.9	2470p1	30 ± 9	17 ± 2	–	–	–	30 ± 9	1 ± 1	21 ± 3	1 ± 13	–	Trc.	Trc.	100 ± 13
1364.8/1365.2	416.1	2392p1	9 ± 3	3 ± 1	–	–	–	21 ± 5	1 ± 1	12 ± 2	54 ± 6	–	–	–	100 ± 6
1381.0/1381.3	421.0	2393p1	–	Trc.	–	–	–	6 ± 1	1 ± 1	5 ± 1	88 ± 1	–	Trc.	–	100 ± 2
1397.1/1397.2	425.9	2394p1	–	–	–	–	–	–	1 ± 1	3 ± 1	96 ± 1	–	Trc.	–	100 ± 1
1415.4/1415.5	431.4	2395p1	Trc.	–	–	–	–	5 ± 1	1 ± 1	4 ± 1	90 ± 1	–	–	–	100 ± 2
1421.5/1421.5	433.3	2396p1	Trc.	–	–	–	–	3 ± 1	1 ± 1	4 ± 1	92 ± 1	–	Trc.	–	100 ± 2
1425.5/1426.0	434.6	2397p1	5 ± 2	–	–	–	–	6 ± 1	1 ± 1	3 ± 1	85 ± 2	–	–	–	100 ± 3
1428.2/1428.4	435.4	2398p1	8 ± 2	–	–	–	–	9 ± 2	1 ± 1	4 ± 1	78 ± 3	–	Trc.	–	100 ± 3
1431.7/1431.9	436.4	1889p1	10 ± 3	3 ± 1	–	–	–	7 ± 2	1 ± 1	6 ± 1	73 ± 4	–	Trc.	–	100 ± 4
1434.4/1434.5	437.2	1890p1	1 ± 1	63 ± 5	–	–	–	18 ± 5	8 ± 1	14 ± 3	–	–	Trc.	–	104 ± 8
1440.1/1440.2	439.0	1891p1	3 ± 1	28 ± 2	–	–	–	8 ± 2	3 ± 1	4 ± 1	54 ± 3	–	Trc.	–	100 ± 3
1447.8/1448.0	441.4	1892p1	3 ± 1	4 ± 1	–	–	–	8 ± 2	3 ± 1	11 ± 2	71 ± 3	–	Trc.	–	100 ± 3
1457.2/1457.6	444.3	1893p1	1 ± 1	66 ± 5	1 ± 1	–	–	11 ± 3	3 ± 1	8 ± 2	10 ± 6	–	–	–	100 ± 6
1460.5/1460.8	445.3	1894p1	1 ± 1	73 ± 6	2 ± 1	–	–	19 ± 4	3 ± 1	7 ± 2	–	–	–	–	105 ± 8
Pre-Tpt bedded tuff 446.3 - 447.8 m															
1465.9/1466.1	446.9	1895p1	2 ± 1	80 ± 6	–	–	–	9 ± 2	3 ± 1	7 ± 2	–	–	–	–	101 ± 7
Calico Hills Formation (Ta) 447.8 - 539.2 m															
1486.3/1486.6	453.1	2238p1	Trc.	73 ± 6	1 ± 1	–	–	20 ± 5	3 ± 1	6 ± 1	–	–	Trc.	–	103 ± 8
1508.5/1508.8	459.9	2239p1	Trc.	68 ± 6	3 ± 1	–	–	16 ± 4	4 ± 1	10 ± 2	–	–	Trc.	–	101 ± 8
1527.1/1527.4	465.6	2240p1	8 ± 2	71 ± 6	–	–	–	19 ± 4	2 ± 1	5 ± 1	–	–	–	–	105 ± 8
1547.1/1547.4	471.6	2241p1	Trc.	66 ± 7	7 ± 2	–	–	18 ± 4	5 ± 1	9 ± 2	–	–	Trc.	–	105 ± 9
1566.9/1567.3	477.7	2242p1	Trc.	69 ± 8	7 ± 2	–	–	14 ± 4	4 ± 1	10 ± 2	–	–	Trc.	–	104 ± 9
1585.4/1585.6	483.3	2243p1	1 ± 1	58 ± 5	1 ± 1	–	–	16 ± 4	9 ± 1	15 ± 3	–	–	Trc.	–	100 ± 7
1605.0/1605.2	489.3	2244p1	1 ± 1	67 ± 8	11 ± 4	–	–	10 ± 2	4 ± 1	9 ± 2	–	–	Trc.	–	102 ± 9
1626.2/1626.3	495.7	2245p1	1 ± 1	71 ± 9	9 ± 3	–	–	15 ± 3	3 ± 1	5 ± 1	–	–	Trc.	–	104 ± 10
1647.9/1648.2	502.4	2246p1	Trc.	63 ± 12	23 ± 7	–	–	9 ± 2	3 ± 1	7 ± 2	–	–	Trc.	–	105 ± 14
1669.7/1669.9	509.0	2247p1	Trc.	63 ± 11	19 ± 5	–	–	13 ± 3	4 ± 1	5 ± 1	–	–	Trc.	–	104 ± 13
1689.8/1690.3	515.2	2248p1	Trc.	70 ± 9	12 ± 4	–	–	12 ± 3	3 ± 1	7 ± 2	–	–	Trc.	–	104 ± 11
1711.7/1711.9	521.8	2249p1	Trc.	70 ± 10	13 ± 4	–	–	13 ± 3	3 ± 1	5 ± 1	–	–	Trc.	–	104 ± 11
1729.6/1729.9	527.3	2250p1	Trc.	55 ± 9	16 ± 4	–	–	19 ± 5	4 ± 1	8 ± 2	–	–	Trc.	–	102 ± 11
1752.6/1753.0	534.3	2251p1	Trc.	43 ± 8	20 ± 5	–	–	16 ± 5	9 ± 1	17 ± 5	–	–	Trc.	–	105 ± 12

Appendix IV. Quantitative XRD results for drill core USW SD-9 (continued).

Sample	Depth (m)	LANL #	Smect-ite	Clino-ptilolite	Morden-ite	Tridy-mite	Cristob-alite	Opal-CT	Quartz	Feld-spar	Glass	Hem-atite	Mica	Horn-blende	Total
Pre-Ta bedded tuff		**539.2 - 553.9 m**													
1770.7/1770.9	539.8	2252p1	1 ± 1	48 ± 7	12 ± 4	–	–	16 ± 4	7 ± 1	14 ± 3	–	–	Trc.	–	98 ± 10
1777.8/1778.0	541.9	2253p1	Trc.	35 ± 4	6 ± 2	–	–	35 ± 10	10 ± 1	17 ± 3	–	–	1 ± 1	–	104 ± 11
1797.8/1798.1	548.1	2254p1	Trc.	50 ± 5	6 ± 2	–	–	5 ± 2	11 ± 1	28 ± 6	–	–	3 ± 1	–	103 ± 8
Prow Pass Tuff (Tcp)		**553.9 m to bottom**													
1821.1/1821.6	555.2	2255p1	8 ± 2	47 ± 4	–	–	–	33 ± 8	4 ± 1	11 ± 2	–	–	Trc.	–	103 ± 9
1840.4/1840.6	561.0	2256p1	2 ± 1	57 ± 5	–	–	–	26 ± 7	3 ± 1	15 ± 3	–	–	Trc.	–	103 ± 9
1864.6/1864.7	568.4	2257p1	–	Trc.	42 ± 8	–	–	40 ± 13	3 ± 1	24 ± 8	–	–	–	Trc.	109 ± 17
1866.2/1866.5	568.9	2258p1	6 ± 2	38 ± 7	20 ± 8	–	–	21 ± 6	3 ± 1	18 ± 5	–	–	–	–	106 ± 13
static water level		**572.3 m**													
1885.6/1886.0	574.9	2259p1	2 ± 1	–	–	–	3 ± 1	–	35 ± 2	57 ± 8	–	1 ± 1	Trc.	–	98 ± 8
1908.5/1908.8	581.8	2260p1	1 ± 1	–	–	–	3 ± 1	–	33 ± 2	59 ± 8	–	1 ± 1	Trc.	–	97 ± 8
1927.8/1928.3	587.7	2363p1	3 ± 1	–	–	–	8 ± 3	–	29 ± 2	62 ± 9	–	1 ± 1	1 ± 1	–	104 ± 10
1949.1/1949.4	594.2	2364p1	3 ± 1	–	–	–	7 ± 3	–	27 ± 2	64 ± 9	–	Trc.	Trc.	–	101 ± 10
1971.9/1972.2	601.1	2365p1	3 ± 1	–	–	–	18 ± 1	–	16 ± 1	63 ± 9	–	Trc.	Trc.	–	100 ± 9
1991.2/1991.4	607.0	2366p1	4 ± 1	–	–	–	29 ± 2	–	5 ± 1	58 ± 8	–	Trc.	Trc.	–	96 ± 8
1993.8/1994.0	607.8	2367p1	3 ± 1	–	–	–	32 ± 2	–	5 ± 1	57 ± 8	–	Trc.	Trc.	–	97 ± 8
2014.5/2015.1	614.2	2368p1	5 ± 2	31 ± 4	8 ± 3	–	–	35 ± 11	2 ± 1	23 ± 5	–	–	–	–	104 ± 13
2036.1/2036.5	620.7	2369p1	3 ± 1	42 ± 5	9 ± 3	–	–	21 ± 7	4 ± 1	26 ± 6	–	–	–	–	105 ± 11
2057.0/2057.3	627.1	2370p1	2 ± 1	48 ± 6	8 ± 3	–	–	21 ± 6	4 ± 1	19 ± 4	–	–	–	–	102 ± 10
2077.6/2078.0	633.4	2371p1	2 ± 1	57 ± 6	6 ± 2	–	–	15 ± 4	6 ± 1	18 ± 4	–	–	–	–	104 ± 9
2098.8/2099.0	639.8	2372p2	1 ± 1	47 ± 7	15 ± 4	–	–	22 ± 6	2 ± 1	14 ± 4	–	–	–	–	101 ± 11
2119.1/2119.3	646.0	2373p1	Trc.	43 ± 9	29 ± 8	–	–	14 ± 4	3 ± 1	17 ± 6	–	–	–	–	106 ± 14
2140.5/2140.9	652.5	2374p1	Trc.	56 ± 8	14 ± 4	–	–	14 ± 4	2 ± 1	16 ± 4	–	–	–	–	102 ± 11
2157.4/2157.6	657.6	2375p1	Trc.	50 ± 8	19 ± 6	–	–	12 ± 4	3 ± 1	20 ± 6	–	–	–	–	104 ± 12
2157.6/2157.7	657.7	2375p2	Trc.	48 ± 9	22 ± 6	–	–	26 ± 6	Trc.	4 ± 1	–	–	–	–	100 ± 12
2178.5/2179.0	664.2	2376p1	1 ± 1	49 ± 8	17 ± 5	–	–	16 ± 5	3 ± 1	18 ± 5	–	–	–	–	104 ± 12
2200.6/2201.3	671.0	2377p1	Trc.	43 ± 7	19 ± 5	–	–	19 ± 6	4 ± 1	20 ± 6	–	–	–	–	105 ± 12
2221.4/2222.0	677.3	2378p1	1 ± 1	62 ± 9	13 ± 4	–	–	17 ± 4	3 ± 1	9 ± 2	–	–	–	–	105 ± 11
bottom of hole		**677.6 m**													

Appendix V. Quantitative XRD results for drill core USW SD-12.

Sample	Depth (m)	LANL #	Smect-ite	Clino-ptilolite	Morden-ite	Tridy-mite	Cristob-alite	Opal-CT	Quartz	Feld-spar	Glass	Hem-atite	Mica	Other	Total
Topopah Spring Tuff (Tpt)		**90.2 - 429.2 m**													
320.2/320.5	97.7	2588p1	19 ± 6	2 ± 1[1]	–	–	1 ± 1	–	2 ± 1	29 ± 4	46 ± 7	1 ± 1	Trc.	Trc.[a]	100 ± 7
324.9/325.3	99.2	2589p1	2 ± 1	–	–	–	Trc.	–	Trc.	14 ± 2	81 ± 2	2 ± 1	1 ± 1	–	100 ± 3
330.7/331.1	100.9	2590p1	Trc.	–	–	1 ± 1	15 ± 1	–	1 ± 1	41 ± 6	23 ± 6	Trc.	1 ± 1	18 ± 1[a]	100 ± 6
331.1/332.5	101.3	2591p1	Trc.	–	–	4 ± 1	25 ± 2	–	5 ± 1	63 ± 9	–	1 ± 1	1 ± 1	–	99 ± 9
337.8/338.0	103.0	2592p1	1 ± 1	–	–	6 ± 1	15 ± 1	–	–	79 ± 11	–	2 ± 1	–	Trc.[b]	103 ± 11
356.7/357.0	108.8	2593p1	Trc.	–	–	5 ± 1	12 ± 1	–	–	74 ± 10	–	2 ± 1	1 ± 1	7 ± 1[a]	101 ± 10
376.3/376.7	114.8	2594p1	Trc.	–	–	13 ± 1	9 ± 5	–	–	77 ± 11	–	1 ± 1	1 ± 1	–	101 ± 12
395.9/396.3	120.8	2595p1	–	–	–	14 ± 1	7 ± 3	–	Trc.	74 ± 10	–	1 ± 1	1 ± 1	Trc.[b]	97 ± 11
419.8/420.0	128.0	2596p1	2 ± 1	–	–	16 ± 2	10 ± 1	–	Trc.	74 ± 10	–	1 ± 1	Trc.	Trc.[b]	103 ± 10
443.3/443.8	135.3	2597p1	2 ± 1	–	–	24 ± 2	8 ± 4	–	1 ± 1	67 ± 9	–	1 ± 1	Trc.	–	103 ± 10
465.8/466.0	142.0	2598p1	4 ± 1	–	–	19 ± 2	13 ± 2	–	2 ± 1	61 ± 9	–	1 ± 1	Trc.	4 ± 1[a]	104 ± 10
489.6/490.0	149.4	2599p1	4 ± 1	–	–	14 ± 1	21 ± 3	–	3 ± 1	55 ± 8	–	1 ± 1	Trc.	–	98 ± 9
517.4/517.8	157.8	2600p1	3 ± 1	–	–	9 ± 1	27 ± 3	–	1 ± 1	56 ± 8	–	1 ± 1	Trc.	–	97 ± 9
543.7/544.1	165.8	2601p1	4 ± 1	–	–	7 ± 1	30 ± 3	–	3 ± 1	55 ± 8	–	1 ± 1	Trc.	1 ± 1[a]	101 ± 9
561.9/562.2	171.4	2602p1	5 ± 2	–	–	7 ± 1	28 ± 2	–	3 ± 1	54 ± 8	–	1 ± 1	Trc.	–	98 ± 9
580.7/580.8	177.0	2603p1	5 ± 2	–	–	6 ± 1	25 ± 2	–	9 ± 1	55 ± 8	–	1 ± 1	Trc.	–	101 ± 9
602.6/604.6	184.3	2604p1	4 ± 1	–	–	8 ± 1	23 ± 2	–	12 ± 1	55 ± 8	–	1 ± 1	Trc.	–	103 ± 8
629.7/630.1	192.1	2605p1	4 ± 1	–	–	5 ± 1	29 ± 2	–	6 ± 1	54 ± 8	–	Trc.	Trc.	–	98 ± 8
654.4/654.6	199.5	2606p1	3 ± 1	–	–	7 ± 1	19 ± 2	–	15 ± 1	56 ± 8	–	Trc.	Trc.	–	100 ± 8
679.5/679.9	207.2	2607p1	4 ± 1	–	–	2 ± 1	30 ± 2	–	8 ± 1	53 ± 7	–	–	Trc.	–	97 ± 7
706.0/706.1	215.2	2608p1	5 ± 2	–	–	4 ± 1	26 ± 2	–	11 ± 1	52 ± 7	–	–	Trc.	–	98 ± 8
733.0/733.3	223.5	2609p1	5 ± 2	–	–	3 ± 1	34 ± 2	–	5 ± 1	54 ± 8	–	Trc.	Trc.	1 ± 1[a]	102 ± 9
759.8/760.1	231.7	2610p1	4 ± 1	–	–	4 ± 1	28 ± 2	–	9 ± 1	54 ± 8	–	Trc.	Trc.	–	99 ± 8
785.5/785.8	239.5	2611p1	3 ± 1	–	–	4 ± 1	34 ± 2	–	3 ± 1	54 ± 8	–	–	Trc.	–	98 ± 8
807.0/807.3	246.1	2012p1	4 ± 1	–	–	3 ± 1	27 ± 2	–	10 ± 1	53 ± 7	–	Trc.	Trc.	–	97 ± 7
831.4/831.7	253.5	2613p1	4 ± 1	–	–	3 ± 1	6 ± 2	–	33 ± 2	56 ± 8	–	Trc.	Trc.	–	102 ± 9
852.9/853.7	260.2	2614p1	4 ± 1	–	–	14 ± 1	16 ± 2	–	13 ± 1	55 ± 8	–	1 ± 1	Trc.	–	103 ± 8
881.1/881.5	268.7	2615p1	3 ± 1	–	–	3 ± 1	17 ± 1	–	23 ± 2	54 ± 8	–	Trc.	Trc.	–	100 ± 8
903.1/903.4	275.4	2616p1	5 ± 2	–	–	4 ± 1	25 ± 2	–	12 ± 1	54 ± 8	–	Trc.	Trc.	–	100 ± 9
929.9/930.2	283.5	2617p1	4 ± 1	–	–	7 ± 1	10 ± 1	–	24 ± 2	55 ± 8	–	Trc.	Trc.	–	100 ± 8
954.7/954.9	291.1	2618p1	3 ± 1	–	–	4 ± 1	22 ± 2	–	16 ± 1	54 ± 8	–	Trc.	Trc.	–	99 ± 8
979.7/980.0	298.7	2619p1	2 ± 1	–	–	3 ± 1	26 ± 2	–	11 ± 1	54 ± 8	–	1 ± 1	–	–	97 ± 8
1273.4/1273.45	388.1	2471p1	–	1 ± 1	–	2 ± 1	29 ± 2	–	7 ± 1	56 ± 8	–	1 ± 1	Trc.	1 ± 1[a]	97 ± 9

Appendix V. Quantitative XRD results for drill core USW SD-12 (continued).

Sample	Depth (m)	LANL #	Smect-ite	Clino-ptilolite	Morden-ite	Tridy-mite	Cristob-alite	Opal-CT	Quartz	Feld-spar	Glass	Hem-atite	Mica	Other	Total
1309.3/1309.6	399.2	1866p1	Trc.	–	–	–	–	20 ± 5	1 ± 1	14 ± 2	65 ± 5	–	Trc.	–	100 ± 5
1319.0/1319.4	402.2	2472p1	Trc.	–	–	–	–	18 ± 5	1 ± 1	15 ± 2	66 ± 5	–	Trc.	–	100 ± 5
1320.6/1321.0	402.6	1867p1	Trc.	–	–	–	–	18 ± 5	1 ± 1	13 ± 2	68 ± 5	–	Trc.	–	100 ± 5
1333.2/1333.4	406.4	1868p1	2 ± 1	–	–	–	–	8 ± 2	1 ± 1	9 ± 1	80 ± 2	–	Trc.	–	100 ± 3
1342.1/1342.2	409.1	1869p1	Trc.	–	–	–	–	4 ± 1	1 ± 1	4 ± 1	91 ± 1	–	Trc.	–	100 ± 2
1351.9/1352.2	412.2	1870p1	Trc.	–	–	–	–	6 ± 1	1 ± 1	5 ± 1	88 ± 1	–	Trc.	–	100 ± 2
1361.9/1362.0	415.1	1871p1	–	–	–	–	–	3 ± 1	1 ± 1	4 ± 1	92 ± 1	–	Trc.	–	100 ± 2
1371.4/1371.5	418.0	1872p1	Trc.	–	–	–	–	2 ± 1	1 ± 1	4 ± 1	93 ± 1	–	Trc.	–	100 ± 2
1381.1/1381.3	421.0	1873p1	1 ± 1	2 ± 1	–	–	–	4 ± 1	1 ± 1	5 ± 1	87 ± 2	–	Trc.	–	100 ± 2
1388.0/1388.1	423.1	1874p1	Trc.	2 ± 1	–	–	–	5 ± 1	3 ± 1	8 ± 1	82 ± 2	–	Trc.	–	100 ± 2
1399.2/1399.3	426.5	1875p1	1 ± 1	3 ± 1	–	–	–	5 ± 1	5 ± 1	12 ± 2	74 ± 2	–	Trc.	–	100 ± 3
Pre-Tpt bedded tuff		**429.2 - 430.0 m**													
1408.0/1408.1	429.2	2708p1	8 ± 2	1 ± 1	–	–	–	3 ± 1	2 ± 1	9 ± 1	77 ± 2	Trc.	Trc.	–	100 ± 3
1410.5/1410.6	430.0	2709p1	2 ± 1	1 ± 1	–	–	–	3 ± 1	2 ± 1	7 ± 1	85 ± 2	Trc.	Trc.	Trc.[b]	100 ± 2
Calico Hills Formation (Ta)		**430.0 - 487.5 m**													
1439.9/1440.1	438.9	2261p1	–	1 ± 1	–	–	–	2 ± 1	2 ± 1	6 ± 1	89 ± 2	–	Trc.	–	100 ± 2
1458.7/1458.9	444.7	2262p1	Trc.	4 ± 1	–	–	–	2 ± 1	2 ± 1	5 ± 1	87 ± 2	–	Trc.	–	100 ± 2
1480.2/1480.5	451.3	2263p1	Trc.	4 ± 1	–	–	–	4 ± 1	4 ± 1	9 ± 1	79 ± 2	–	Trc.	–	100 ± 2
1500.8/1501.0	457.5	2264p1	1 ± 1	5 ± 1	–	–	–	4 ± 1	4 ± 1	7 ± 1	79 ± 2	–	Trc.	–	100 ± 2
1519.8/1520.1	463.3	2265p1	2 ± 1	5 ± 1	–	–	–	12 ± 3	6 ± 1	17 ± 2	58 ± 4	–	Trc.	–	100 ± 4
1540.9/1541.3	469.8	2266p1	2 ± 1	10 ± 1	–	–	–	9 ± 2	5 ± 1	10 ± 2	64 ± 3	–	Trc.	–	100 ± 3
1561.1/1561.3	475.9	2267p1	3 ± 1	3 ± 1	–	–	–	5 ± 1	3 ± 1	8 ± 1	78 ± 2	–	Trc.	–	100 ± 2
1581.3/1581.6	482.1	2268p1	2 ± 1	9 ± 1	–	–	–	5 ± 1	4 ± 1	7 ± 1	73 ± 2	–	Trc.	–	100 ± 2
Pre-Ta bedded tuff		**487.5 - 502.4 m**													
1600.0/1600.3	487.8	2269p1	4 ± 1	12 ± 1	–	–	–	5 ± 1	7 ± 1	10 ± 2	62 ± 2	–	Trc.	–	100 ± 3
1600.0/1600.3	487.8	2269p2	7 ± 2	51 ± 6	4 ± 2	–	–	30 ± 7	2 ± 1	8 ± 2	–	–	–	–	102 ± 10
1601.5/1601.8	488.2	2390p1	5 ± 2	68 ± 5	–	–	–	15 ± 3	4 ± 1	6 ± 1	–	–	–	–	98 ± 6
1609.9/1610.4	490.8	2391p1	3 ± 1	30 ± 2	–	–	–	7 ± 2	11 ± 1	11 ± 2	34 ± 3	–	Trc.	4 ± 1[c]	100 ± 4
1620.4/1620.6	494.0	2270p1	4 ± 1	59 ± 5	–	–	–	18 ± 5	8 ± 1	14 ± 3	–	–	1 ± 1	1 ± 1[a]	105 ± 8
1641.4/1641.7	500.4	2271p1	9 ± 3	14 ± 1	–	–	–	25 ± 11	8 ± 1	45 ± 7	–	–	1 ± 1	1 ± 1[a]	103 ± 14
Prow Pass Tuff (Tcp)		**502.4 - 653.8 m**													
1656.3/1656.8	505.0	2272p1	7 ± 2	58 ± 5	–	–	–	23 ± 6	3 ± 1	13 ± 3	–	–	–	1 ± 1[a]	105 ± 9
1680.7/1680.9	512.3	2273p1	2 ± 1	–	–	–	7 ± 2	–	35 ± 2	54 ± 8	–	2 ± 1	Trc.	–	100 ± 9

Appendix V. Quantitative XRD results for drill core USW SD-12 (continued).

Sample	Depth (m)	LANL #	Smect-ite	Clino-ptilolite	Morden-ite	Tridy-mite	Cristob-alite	Opal-CT	Quartz	Feld-spar	Glass	Hem-atite	Mica	Other	Total
1700.3/1700.6	518.3	2274p1	3 ± 1	–	–	2 ± 1	4 ± 1	–	34 ± 2	55 ± 8	–	1 ± 1	Trc.	–	99 ± 8
1720.1/1720.4	524.4	2275p1	2 ± 1	–	–	3 ± 1	2 ± 1	–	32 ± 2	56 ± 8	–	2 ± 1	Trc.	–	97 ± 8
1739.8/1740.2	530.4	2276p1	2 ± 1	–	–	3 ± 1	2 ± 1	–	32 ± 2	58 ± 8	–	1 ± 1	1 ± 1	–	99 ± 9
1760.0/1760.4	536.6	2277p1	3 ± 1	–	–	3 ± 1	2 ± 1	–	30 ± 2	60 ± 8	–	1 ± 1	Trc.	–	99 ± 8
1780.2/1780.4	542.7	2278p1	2 ± 1	–	–	–	10 ± 1	–	26 ± 2	60 ± 8	–	1 ± 1	Trc.	–	99 ± 8
1799.4/1800.0	548.6	2279p1	2 ± 1	–	–	3 ± 1	4 ± 1	–	31 ± 2	57 ± 8	–	1 ± 1	Trc.	–	98 ± 8
1821.2/1821.6	555.2	2280p1	Trc.	–	–	–	18 ± 1	–	21 ± 2	60 ± 8	–	1 ± 1	Trc.	–	100 ± 8
1840.6/1840.8	561.1	2281p1	5 ± 2	–	–	–	27 ± 2	–	9 ± 1	55 ± 8	–	2 ± 1	1 ± 1	–	99 ± 9
1860.0/1860.3	567.0	2282p1	2 ± 1	–	–	–	31 ± 2	–	5 ± 1	57 ± 8	–	1 ± 1	Trc.	–	96 ± 8
1874.4/1874.5	571.3	2283p1	6 ± 2	10 ± 1	5 ± 2	–	–	45 ± 17	4 ± 1	34 ± 6	–	–	–	Trc.[b]	104 ± 18
1891.6/1891.9	576.7	2284p1	5 ± 2	50 ± 6	10 ± 4	–	–	11 ± 3	6 ± 1	22 ± 5	–	–	–	–	104 ± 10
1911.8/1911.9	582.7	2285p1	5 ± 2	48 ± 5	4 ± 2	–	–	21 ± 6	5 ± 1	19 ± 4	–	–	–	–	102 ± 9
1929.7/1929.9	588.2	2286p1	3 ± 1	51 ± 6	6 ± 2	–	–	21 ± 6	4 ± 1	19 ± 4	–	–	–	Trc.[b]	104 ± 10
Static Water Level			**593.8 m**												
1950.0/1950.7	594.6	2287p1	3 ± 1	56 ± 6	5 ± 2	–	–	16 ± 5	4 ± 1	21 ± 5	–	–	–	Trc.[b]	105 ± 10
1972.1/1972.4	601.2	2379p1	2 ± 1	65 ± 5	–	–	–	15 ± 4	4 ± 1	19 ± 4	–	–	Trc.	–	105 ± 8
1990.7/1990.9	606.8	2380p1	3 ± 1	62 ± 5	2 ± 1	–	–	18 ± 5	4 ± 1	13 ± 3	–	–	–	–	102 ± 8
2010.6/2010.9	612.9	2381p1	1 ± 1	69 ± 6	3 ± 1	–	–	14 ± 4	2 ± 1	15 ± 3	–	–	–	–	104 ± 8
2029.3/2029.5	618.6	2382p1	2 ± 1	34 ± 8	30 ± 9	–	–	15 ± 5	3 ± 1	20 ± 6	–	–	–	–	104 ± 14
2050.7/2051.1	625.2	2383p1	2 ± 1	38 ± 8	28 ± 9	–	–	16 ± 5	2 ± 1	19 ± 6	–	–	–	–	105 ± 14
2072.1/2072.4	631.7	2384p1	2 ± 1	44 ± 9	25 ± 8	–	–	15 ± 4	1 ± 1	16 ± 5	–	–	–	–	103 ± 14
2092.7/2093.0	637.9	2385p1	2 ± 1	53 ± 8	16 ± 5	–	–	14 ± 4	1 ± 1	16 ± 4	–	–	–	–	102 ± 11
2120.2/2120.4	646.3	2386p1	2 ± 1	53 ± 9	20 ± 6	–	–	11 ± 3	3 ± 1	13 ± 4	–	–	–	–	102 ± 12
2142.6/2142.8	653.1	2387p1	1 ± 1	52 ± 8	16 ± 5	–	–	11 ± 3	2 ± 1	21 ± 6	–	–	–	–	103 ± 12
Bull Frog Tuff (Tcb)		**653.8 m to Bottom**													
2148.6/2148.9	655.0	2388p1	2 ± 1	–	–	–	13 ± 1	–	26 ± 2	56 ± 8	–	1 ± 1	–	–	98 ± 8
2163.0/2163.4	659.4	2389p1	–	–	–	–	6 ± 2	–	33 ± 2	59 ± 8	–	1 ± 1	1 ± 1	–	100 ± 9
bottom of hole		**660.3 m**													

[1] Zeolite, exact species uncertain but believed to be clinoptilolite.
[a]Calcite.
[B]Hornblende.
[C]Chabazite.

Appendix VI. Quantitative XRD results for drill core USW UZ#14.

Sample	Depth (m)	LANL #	Smect-ite	Clino-ptilolite	Steller-ite	Erion-ite	Tridy-mite	Cristob-alite	Opal-CT	Quartz	Feld-spar	Glass	Hem-atite	Mica	Other	Total
Alluvium			**0-12.2 m**													
13.8/.14.2	4.3	#1441p2	Trc.	–	–	–	22 ± 2	5 ± 3	–	–	73 ± 10	–	1 ± 1	Trc.	Trc.[1]	101 ± 11
31.9/32.2	9.8	#1442p1	2 ± 1	–	–	–	2 ± 1	34 ± 2	–	–	57 ± 8	–	Trc.	–	1 ± 1[2]	96 ± 8
Yucca Mountain Tuff			**12.2-31.1 m**													
48.9/49.2	15.0	#1443p2	Trc.	–	–	–	7 ± 1	30 ± 3	–	1 ± 1	60 ± 8	–	–	Trc.	–	98 ± 9
49.5/49.8	15.2	#1444p1	Trc.	–	–	–	7 ± 1	29 ± 2	–	Trc.	59 ± 8	–	–	Trc.	–	95 ± 8
54.9/55.4	16.9	#1445p1	Trc.	–	–	–	5 ± 1	32 ± 2	–	–	58 ± 8	–	–	–	–	95 ± 8
62.0/62.5	19.1	#1446p1	Trc.	–	–	–	2 ± 1	34 ± 2	–	1 ± 1	58 ± 8	–	–	–	–	95 ± 8
71.0/71.4	21.8	#1447p1	21 ± 6	–	–	–	–	–	–	Trc.	1 ± 1	78 ± 6	–	–	–	100 ± 6
76.3/76.7	23.4	#1448p1	18 ± 5	–	–	–	–	–	–	Trc.	Trc.	82 ± 5	–	–	–	100 ± 5
81.4/81.7	24.9	#1449p1	10 ± 3	–	–	–	–	1 ± 1	–	Trc.	10 ± 1	79 ± 3	–	–	–	100 ± 3
83.9/84.1	25.6	#1450p1	11 ± 3	–	–	–	–	1 ± 1	–	1 ± 1	8 ± 1	79 ± 3	–	–	–	100 ± 3
89.1/89.3	27.2	#1451p1	14 ± 4	1 ± 1	–	–	–	1 ± 1	–	1 ± 1	10 ± 1	73 ± 4	–	–	Trc.[1]	100 ± 4
92.5/92.6	28.2	#1452p1	22 ± 7	Trc.	–	–	1 ± 1	1 ± 1	–	5 ± 1	14 ± 2	57 ± 7	Trc.	–	–	100 ± 7
98.9/99.2	30.2	#1453p1	17 ± 5	–	–	–	–	1 ± 1	–	1 ± 1	19 ± 3	62 ± 6	–	Trc.	–	100 ± 6
101.6/102.0	31.1	#1454p1	28 ± 8	–	–	–	–	1 ± 1	–	Trc.	16 ± 2	54 ± 8	–	1 ± 1	–	100 ± 8
Pah Canyon Tuff			**31.1-78.8 m**													
104.4/104.6	31.9	#1455p1	21 ± 6	–	–	–	–	Trc.	–	Trc.	13 ± 2	66 ± 6	–	Trc.	–	100 ± 6
124.3/124.6	38.0	#1456p1	13 ± 4	–	–	–	–	1 ± 1	–	1 ± 1	16 ± 2	67 ± 4	1 ± 1	1 ± 1	–	100 ± 5
150.3/150.5	45.9	#1457p1	11 ± 3	–	–	–	–	Trc.	–	1 ± 1	17 ± 2	69 ± 4	1 ± 1	1 ± 1	–	100 ± 4
164.0/164.4	50.1	#1458p1	7 ± 2	–	–	–	–	1 ± 1	–	1 ± 1	16 ± 2	74 ± 3	–	1 ± 1	–	100 ± 3
183.9/184.0	56.1	#1459p1	5 ± 2	–	–	–	–	1 ± 1	–	2 ± 1	20 ± 3	71 ± 4	–	1 ± 1	–	100 ± 4
204.2/204.4	62.3	#1460p1	11 ± 3	–	–	–	–	1 ± 1	–	1 ± 1	17 ± 2	69 ± 4	–	1 ± 1	–	100 ± 4
224.2/224.5	68.4	#1461p1	11 ± 3	–	–	–	–	1 ± 1	–	1 ± 1	16 ± 2	70 ± 4	–	1 ± 1	–	100 ± 4
227.7/228.0	69.5	#1462p1	13 ± 4	–	–	–	–	2 ± 1	–	1 ± 1	17 ± 2	65 ± 4	–	2 ± 1	–	100 ± 5
239.1/239.4	73.0	#1463p1	17 ± 5	–	–	–	–	1 ± 1	–	1 ± 1	11 ± 2	70 ± 5	–	Trc.	–	100 ± 6
241.4/241.7	73.7	#1464p1	19 ± 6	–	–	–	–	1 ± 1	–	3 ± 1	20 ± 3	54 ± 6	–	3 ± 1	–	100 ± 7

Appendix VI. Quantitative XRD results for drill core USW UZ#14 (continued).

Sample	Depth (m)	LANL #	Smect-ite	Clino-ptilolite	Steller-ite	Erion-ite	Tridy-mite	Cristob-alite	Opal-CT	Quartz	Feld-spar	Glass	Hem-atite	Mica	Other	Total
Topopah Spring Tuff			**78.8-428.0 m**													
261.6/262.0	79.9	#1465p1	10 ± 3	1 ± 1[a]	–	–	–	1 ± 1	–	1 ± 1	17 ± 2	68 ± 4	–	2 ± 1	–	100 ± 4
278.3/278.5	84.9	#1466p1	19 ± 6	–	–	–	–	1 ± 1	–	1 ± 1	17 ± 2	58 ± 6	1 ± 1	3 ± 1	–	100 ± 7
279.7/280.7	85.6	#1467p1	12 ± 4	–	–	–	–	1 ± 1	–	1 ± 1	12 ± 2	73 ± 4	Trc.	1 ± 1	–	100 ± 5
282.5/282.8	86.2	#1468p1	Trc.	–	–	–	–	1 ± 1	–	–	15 ± 2	81 ± 2	2 ± 1	1 ± 1	–	100 ± 3
286.4/286.7	87.4	#1470p1	Trc.	Trc.[a]	–	–	4 ± 1	18 ± 1	–	1 ± 1	72 ± 10	–	Trc.	1 ± 1	–	96 ± 10
293.7/293.9	89.6	#1471p1	–	–	–	–	6 ± 1	19 ± 2	–	–	71 ± 10	–	1 ± 1	1 ± 1	–	98 ± 10
302.6/303.0	92.4	#1472p1	Trc.	–	–	–	7 ± 1	20 ± 2	–	Trc.	70 ± 10	–	1 ± 1	Trc.	–	98 ± 10
311.9/312.2	95.2	#1473p1	1 ± 1	–	–	–	13 ± 1	15 ± 2	–	1 ± 1	68 ± 10	–	1 ± 1	1 ± 1	–	100 ± 10
330.7/331.0	100.9	#1474p1	–	–	–	–	6 ± 1	16 ± 1	–	Trc.	74 ± 10	–	1 ± 1	1 ± 1	–	98 ± 10
349.5/349.8	106.6	#1475p1	Trc.	–	–	–	10 ± 1	11 ± 1	–	–	74 ± 10	–	1 ± 1	1 ± 1	–	97 ± 10
374.5/374.9	114.3	#1476p1	1 ± 1	–	–	–	9 ± 1	12 ± 1	–	Trc.	75 ± 11	–	2 ± 1	1 ± 1	–	100 ± 11
398.4/398.6	121.5	#1477p1	2 ± 1	–	2 ± 1[b]	–	11 ± 1	11 ± 1	–	–	71 ± 10	–	1 ± 1	Trc.	–	98 ± 10
407.8/408.1	124.4	#1478p1	2 ± 1	–	1 ± 1[b]	–	10 ± 1	13 ± 1	–	–	71 ± 10	–	1 ± 1	1 ± 1	–	99 ± 10
424.4/424.7	129.4	#1479p1	4 ± 1	–	Trc.[b]	–	11 ± 1	12 ± 1	–	Trc.	70 ± 10	–	1 ± 1	Trc.	–	98 ± 10
439.4/440.0	134.1	#1480p1	4 ± 1	–	–	–	20 ± 2	13 ± 2	–	1 ± 1	63 ± 9	–	Trc.	Trc.	–	101 ± 10
464.6/465.6	141.9	#1481p1	4 ± 1	–	–	–	14 ± 1	19 ± 2	–	3 ± 1	58 ± 8	–	1 ± 1	Trc.	–	99 ± 8
488.9/489.3	149.1	#1482p1	4 ± 1	–	–	–	6 ± 1	29 ± 2	–	3 ± 1	54 ± 8	–	1 ± 1	Trc.	–	97 ± 8
514.6/515.1	157.0	#1483p1	3 ± 1	–	1 ± 1[b]	–	16 ± 2	20 ± 3	–	5 ± 1	55 ± 8	–	1 ± 1	Trc.	–	101 ± 9
537.4/537.9	164.0	#1484p1	3 ± 1	–	2 ± 1[b]	–	6 ± 1	32 ± 3	–	3 ± 1	55 ± 8	–	1 ± 1	–	–	102 ± 9
560.8/561.3	171.1	#1485p1	3 ± 1	–	2 ± 1[b]	–	7 ± 1	31 ± 3	–	3 ± 1	51 ± 7	–	1 ± 1	–	–	98 ± 8
582.6/583.6	177.9	#1486p1	4 ± 1	–	1 ± 1[b]	–	8 ± 1	29 ± 3	–	2 ± 1	50 ± 7	–	1 ± 1	Trc.	–	95 ± 8
609.9/610.4	186.0	#1489p1	4 ± 1	–	1 ± 1[b]	–	7 ± 1	28 ± 2	–	5 ± 1	53 ± 7	–	1 ± 1	–	–	99 ± 8
635.5/636.2	193.9	#1489p2	7 ± 2	–	5 ± 1	–	18 ± 2	19 ± 3	–	6 ± 1	42 ± 6	–	1 ± 1	Trc.	–	98 ± 7
656.3/656.9	200.2	#1490p1	2 ± 1	–	–	–	10 ± 1	17 ± 2	–	15 ± 1	54 ± 8	–	1 ± 1	–	–	99 ± 8
675.1/675.7	206.0	#1491p1	3 ± 1	–	–	–	5 ± 1	31 ± 2	–	5 ± 1	54 ± 8	–	1 ± 1	–	–	99 ± 8
695.6/696.0	212.1	#1493p1	5 ± 2	–	–	–	6 ± 1	32 ± 3	–	2 ± 1	52 ± 7	–	1 ± 1	–	–	98 ± 8
717.3/717.6	218.7	#1494p1	3 ± 1	–	–	–	5 ± 1	32 ± 2	–	4 ± 1	52 ± 7	–	1 ± 1	–	–	97 ± 8
738.0/738.5	225.1	#1497p1	3 ± 1	–	–	–	3 ± 1	29 ± 2	–	9 ± 1	53 ± 7	–	–	Trc.	–	97 ± 7
758.2/758.3	231.1	#1489p1	5 ± 2	–	–	–	4 ± 1	31 ± 2	–	5 ± 1	55 ± 8	–	Trc.	Trc.	–	100 ± 9
777.8/778.3	237.2	#1499p1	3 ± 1	–	–	–	4 ± 1	20 ± 2	–	16 ± 1	55 ± 8	–	1 ± 1	–	–	99 ± 8

Appendix VI. Quantitative XRD results for drill core USW UZ#14 (continued).

Sample	Depth (m)	LANL #	Smect-ite	Clino-ptilolite	Steller-ite	Erion-ite	Tridy-mite	Cristob-alite	Opal-CT	Quartz	Feld-spar	Glass	Hem-atite	Mica	Other	Total
797.4/797.8	243.2	#1500p1	4 ± 1	–	–	–	4 ± 1	33 ± 2	–	7 ± 1	54 ± 8	–	1 ± 1	Trc.	–	103 ± 8
817.7/818.0	249.3	#1501p1	5 ± 2	–	–	–	5 ± 1	32 ± 2	–	5 ± 1	50 ± 7	–	Trc.	Trc.	–	97 ± 8
837.7/838.1	255.5	#1502p1	3 ± 1	–	–	–	15 ± 2	16 ± 2	–	11 ± 1	51 ± 7	–	1 ± 1	Trc.	–	97 ± 8
860.2/860.5	262.3	#1503p1	4 ± 1	–	–	–	4 ± 1	11 ± 1	–	24 ± 2	59 ± 8	–	Trc.	Trc.	–	102 ± 8
881.5/881.8	268.8	#1504p1	4 ± 1	–	–	–	4 ± 1	13 ± 1	–	26 ± 2	53 ± 7	–	1 ± 1	Trc.	–	101 ± 8
902.0/902.8	275.2	#1505p1	2 ± 1	–	–	–	5 ± 1	23 ± 2	–	15 ± 1	56 ± 8	–	1 ± 1	Trc.	–	102 ± 8
923.8/924.4	281.8	#1506p1	3 ± 1	–	–	–	4 ± 1	15 ± 1	–	22 ± 2	58 ± 8	–	1 ± 1	Trc.	–	103 ± 8
945.4/945.5	288.2	#1507p1	3 ± 1	–	1 ± 1	–	7 ± 1	20 ± 2	–	14 ± 1	56 ± 8	–	1 ± 1	Trc.	–	102 ± 9
967.4/967.6	294.9	#1508p1	3 ± 1	–	–	–	3 ± 1	20 ± 2	–	19 ± 1	55 ± 8	–	Trc.	Trc.	–	100 ± 8
986.4/986.7	300.7	#1509p1	2 ± 1	–	1 ± 1	–	6 ± 1	27 ± 2	–	7 ± 1	53 ± 7	–	1 ± 1	Trc.	–	97 ± 8
1010.6/1011.1	308.2	#1510p1	4 ± 1	–	–	–	3 ± 1	27 ± 2	–	11 ± 1	52 ± 7	–	1 ± 1	Trc.	–	98 ± 8
1027.0/1027.2	313.1	#1511p1	3 ± 1	–	–	–	6 ± 1	20 ± 2	–	13 ± 1	53 ± 7	–	1 ± 1	Trc.	–	96 ± 8
1046.7/1047.0	319.1	#1512p1	3 ± 1	–	–	–	3 ± 1	31 ± 2	–	7 ± 1	53 ± 7	–	Trc.	Trc.	–	97 ± 7
1070.3/1070.9	326.4	#1513p1	3 ± 1	1 ± 1[a]	–	–	6 ± 1	15 ± 1	–	22 ± 2	51 ± 7	–	1 ± 1	Trc.	–	99 ± 8
1091.1/1091.6	332.7	#1515p1	3 ± 1	–	–	–	3 ± 1	23 ± 2	–	14 ± 1	54 ± 8	–	1 ± 1	Trc.	–	98 ± 8
1113.3/1113.7	339.5	#1516p1	2 ± 1	–	–	–	5 ± 1	27 ± 2	–	9 ± 1	54 ± 8	–	1 ± 1	–	–	98 ± 8
1133.7/1134.1	345.7	#1517p1	3 ± 1	–	–	–	9 ± 1	18 ± 2	–	15 ± 1	54 ± 8	–	1 ± 1	Trc.	–	100 ± 8
1154.9/1155.3	352.1	#1518p1	4 ± 1	–	–	–	4 ± 1	16 ± 1	–	22 ± 2	57 ± 8	–	Trc.	Trc.	–	103 ± 8
1175.6/1175.7	358.4	#2008p1	7 ± 2	–	–	–	5 ± 1	24 ± 2	–	14 ± 1	52 ± 7	–	1 ± 1	Trc.	–	103 ± 8
1195.2/1195.3	364.3	#2009p1	9 ± 3	–	–	–	4 ± 1	22 ± 2	–	15 ± 1	49 ± 7	–	1 ± 1	Trc.	–	100 ± 8
1215.8/1216.0	370.6	#2010p1	4 ± 1	–	5 ± 1	–	2 ± 1	21 ± 2	–	17 ± 1	52 ± 7	–	1 ± 1	Trc.	–	102 ± 8
1234.8/1235.0	376.4	#2011p1	4 ± 1	–	6 ± 1	–	2 ± 1	22 ± 2	–	17 ± 1	51 ± 7	–	Trc.	Trc.	–	102 ± 8
1254.6/1254.7	382.4	#2012p1	4 ± 1	–	3 ± 1	–	3 ± 1	23 ± 2	–	14 ± 1	48 ± 7	–	1 ± 1	Trc.	–	96 ± 8
1264.6/1264.7	385.5	#2013p1	3 ± 1	2 ± 1	13 ± 3	–	1 ± 1	22 ± 2	–	13 ± 1	46 ± 6	–	–	Trc.	–	100 ± 7
1277.4/1277.7	389.4	I. Yang	15 ± 5	58 ± 5	–	–	–	–	20 ± 5	1 ± 1	6 ± 1	–	–	Trc.	–	100 ± 9
1298.6/1299.1	396.0	#1876p1	50 ± 15	32 ± 2	–	–	–	–	9 ± 2	2 ± 1	7 ± 1	–	–	Trc.	–	100 ± 15
1358.6/1358.8	414.2	#1714p1	4 ± 1	3 ± 1	–	–	–	–	1 ± 1	1 ± 1	3 ± 1	88 ± 2	–	Trc.	–	100 ± 2
1361.8/1361.9	415.1	#1877p1	8 ± 2	4 ± 1	–	2 ± 1	–	4 ± 1	–	5 ± 1	13 ± 2	64 ± 3	–	Trc.	–	100 ± 3
1362.6/1363.0	415.4	#1878p1	22 ± 7	10 ± 1	–	17 ± 3	–	–	–	1 ± 1	6 ± 1	44 ± 7	–	–	–	100 ± 8
1364.4/1364.6	415.9	#1715p1	9 ± 3	23 ± 2	–	34 ± 7	–	–	–	1 ± 1	12 ± 2	21 ± 8	–	Trc.	–	100 ± 8

Appendix VI. Quantitative XRD results for drill core USW UZ#14 (continued).

Sample	Depth (m)	LANL #	Smect-ite	Clino-ptilolite	Steller-ite	Erion-ite	Tridy-mite	Cristob-alite	Opal-CT	Quartz	Feld-spar	Glass	Hem-atite	Mica	Other	Total
1365.8/1366.0	416.4	#1716p1	5 ± 2	37 ± 3	–	17 ± 3	–	–	17 ± 4	4 ± 1	8 ± 1	12 ± 6	–	Trc.	–	100 ± 6
1370.1/1370.3	417.7	#1717p1	11 ± 3	23 ± 2	–	5 ± 1	–	–	10 ± 2	1 ± 1	8 ± 1	42 ± 4	–	–	–	100 ± 4
1370.3/1370.7	417.8	#1657p1	17 ± 5	14 ± 1	–	7 ± 1	–	–	3 ± 1	1 ± 1	4 ± 1	54 ± 5	–	Trc.	–	100 ± 5
1371.8/1372.0	418.2	#1718p1	14 ± 4	7 ± 1	–	2 ± 1	–	–	4 ± 1	1 ± 1	3 ± 1	69 ± 4	–	–	–	100 ± 5
1372.7/1372.9	418.5	#1879p1	8 ± 2	19 ± 1	–	Trc.	–	–	6 ± 1	1 ± 1	4 ± 1	62 ± 2	–	Trc.	–	100 ± 3
1375.2/1375.4	419.2	#1720p1	5 ± 2	8 ± 1	–	–	–	–	3 ± 1	1 ± 1	4 ± 1	79 ± 2	–	Trc.	–	100 ± 3
1387.0/1387.2	422.8	#1726p1	3 ± 1	14 ± 1	–	–	–	–	3 ± 1	Trc.	4 ± 1	76 ± 2	–	Trc.	–	100 ± 2
1398.5/1398.7	426.3	#1732p1	1 ± 1	77 ± 6	–	–	–	–	12 ± 3	3 ± 1	9 ± 2	–	–	Trc.	1 ± 1[3]	103 ± 7
Calico Hills Formation			**428.0-533.4 m**													
1414.9/1415.1	431.3	#1739p1	2 ± 1	66 ± 5	–	–	–	–	14 ± 4	5 ± 1	11 ± 2	–	–	Trc.	1 ± 1[3]	99 ± 7
1417.6/1417.8	432.1	#1746p1	2 ± 1	65 ± 5	–	–	–	–	13 ± 3	6 ± 1	12 ± 3	–	–	Trc.	1 ± 1[3]	99 ± 7
Prow Pass Tuff			**533.4-631.5 m**													
Static Water Level			**597.4 m**													
Bullfrog Tuff			**631.5 m to Bottom**													
Bottom of Drill Hole			**672.7 m**													

[a]Zeolite, exact species uncertain but believed to be clinoptilolite.
[b]Zeolite, exact species uncertain but believed to be stellerite, possibly with clinoptilolite.
[1]Hornblende
[2]Calcite
[3]Mordenite

Appendix VII. Quantitative XRD results for USW H-3 drill cuttings (new data in bold type).

Sample[a]	Depth (m)	Smectite	Mica	Clino-ptilolite	Morden-ite	Tridy-mite	Quartz	Cristob-alite*	Alkali Feldspar	Glass	Hematite	Horn-blende	Calcite
Topopah Spring Tuff	123.1-424.3 m												
470-480	143.3-146.3	–	2 ± 1	–	–	13 ± 6	–	8 ± 3	77 ± 10	–	1 ± 1	–	–
520-530	158.5-161.5	–	–	–	–	Tr.	–	24 ± 5	76 ± 10	–	–	–	–
540-550	164.6-167.6	–	Tr.	–	–	21 ± 4	–	5 ± 3	73 ± 10	–	1 ± 1	–	–
610-620	185.9-189.0	–	–	–	–	Tr.	–	29 ± 5	71 ± 10	–	1 ± 1	–	–
740-750	225.6-228.6	~1	~1	–	–	–	4 ± 2	26 ± 5	68 ± 10	–	–	–	–
800-810	243.8-246.9	2 ± 1	~1	–	–	Tr.	2 ± 1	27 ± 5	69 ± 10	–	–	–	–
870-880	265.2-268.2	~1	Tr.	–	–	–	29 ± 4	3 ± 2	66 ± 10	–	–	–	–
930-940	283.5-286.5	~1	~1	–	–	–	14 ± 3	16 ± 4	69 ± 10	–	1 ± 1	–	–
990-1000	301.8-304.8	~1	–	–	–	4 ± 2	Tr.	23 ± 5	72 ± 10	–	–	–	–
1030-1040	313.9-317.0	~1	–	–	–	Tr.	3 ± 1	24 ± 5	72 ± 10	–	1 ± 1	–	–
1100-1110	335.3-338.3	~1	–	–	–	Tr.	2 ± 1	23 ± 5	74 ± 10	–	1 ± 1	–	–
1160-1170	353.6-356.6	~1	~1	–	–	–	2 ± 1	29 ± 5	67 ± 10	–	–	–	–
1270-1280	387.1-390.1	–	2 ± 1	–	–	–	2 ± 1	7 ± 4	19 ± 10	70 ± 20	–	–	–
1320-1330	402.3-405.4	–	–	–	–	–	2 ± 1	5 ± 3	23 ± 10	70 ± 20	–	–	–
1360-1370	**414.5-417.6**	**Tr.**	**Tr.**	**–**	**–**	**–**	**Tr.**	**Tr.**	**3 ± 1**	**97 ± 1**	**–**	**–**	**–**
Calico Hills Formation and pre-Ta bedded tuffs	424.3-453.2 m												
1440-1450	**438.9-442.0**	**3 ± 1**	**Tr.**	**–**	**–**	**–**	**Tr.**	**5 ± 1**	**11 ± 1**	**81 ± 2**	**–**	**–**	**–**
1480-1490	**451.1-454.2**	**5 ± 2**	**5 ± 2**	**1 ± 1**	**–**	**–**	**3 ± 1**	**1 ± 1**	**47 ± 7**	**34 ± 8**		**1 ± 1**	**3 ± 1**
Prow Pass Tuff	453.2-581.3 m												
1500-1510	**457.2-460.2**	**2 ± 1**	**Tr.**	**1 ± 1**	**–**	**4 ± 1**	**12 ± 1**	**20 ± 2**	**50 ± 7**	**10 ± 8**	**1 ± 1**		
1550(SW)	472.4	Tr.	1 ± 1	2 ± 3	–	7 ± 3	10 ± 5	7 ± 3	70 ± 10	–	–	–	–
1655(SW)	504.5	Tr.	1 ± 1	2 ± 3	–	7 ± 3	7 ± 3	7 ± 3	75 ± 10	–	–	–	–
1700(SW)	518.2	Tr.	1 ± 1	2 ± 3	–	–	10 ± 5	15 ± 5	60 ± 10	15 ± 5	–	–	–
1800(SW)	548.6	2 ± 3	1 ± 1	60 ± 10	–	–	7 ± 3	–	30 ± 10	–	–	–	–
1900(SW)	579.1	7 ± 3	1 ± 1	75 ± 5	–	2 ± 3	2 ± 3	2 ± 3	15 ± 5	–	–	–	–
Bullfrog Tuff	581.3-755.1 m												
2400(SW)	731.5	–	1 ± 1	75 ± 5	–	–	2 ± 3	2 ± 3	15 ± 5	–	–	1 ± 1	–
2440(SW)	743.7	–	1 ± 1	35 ± 5	30 ± 10	–	2 ± 3	2 ± 3	30 ± 10	–	–	–	–
static water level	750.9 m												
Tram Tuff	755.1-1108.6 m												
2490(SW)	759.0	2 ± 3	1 ± 1	45 ± 5	25 ± 5	–	2 ± 3	–	20 ± 10	–	–	–	–

[a] Sample numbers represent depth of sample in feet. SW = sidewall core sample from Levy (1984).
*Opal-CT present in zeolitic tuff is reported as cristobalite.

Appendix VIIIa. Major element XRF results (wt%) for drill hole USW SD-7 samples.

Sample	Depth (m)	LANL #	SiO_2	TiO_2	Al_2O_3	Fe_2O_3	MnO	MgO	CaO	Na_2O	K_2O	P_2O_5	LOI	Total
1278.6/1278.9	389.8	2030p1	75.24	0.097	12.35	0.96	0.069	nd	0.54	3.61	4.58	nd	2.84	100.37
1321.5/1321.6	402.8	2032p1	75.10	0.096	12.25	0.96	0.075	nd	0.52	3.51	4.89	nd	2.97	100.47
1350.5/1350.7	411.7	2034p1	71.55	0.098	11.82	0.94	0.065	nd	3.29	3.40	4.52	nd	4.33	100.08
1421.1/1421.3	433.2	2297p1	74.79	0.097	12.32	1.00	0.092	nd	0.57	3.35	4.69	nd	3.44	100.43
1467.4/1457.5	444.2	2299p1	74.37	0.094	12.13	0.99	0.061	nd	0.72	3.03	4.81	nd	3.68	99.96
1471.5/1471.8	448.6	2300p1	74.33	0.094	12.34	1.00	0.063	nd	0.83	3.03	4.67	nd	4.00	100.42
1493.2/1493.6	455.2	2301p1	69.22	0.111	14.08	1.20	0.065	nd	2.04	2.02	3.67	nd	7.71	100.30
1493.2/1493.6b	455.2	2301p2	73.40	0.087	10.62	0.88	0.052	nd	2.51	1.80	2.75	0.011	8.14	100.32
1513.9/1514.2	461.5	2302p1	72.76	0.095	12.16	1.00	0.062	nd	1.34	2.45	4.29	nd	6.09	100.34
1517.3/1517.6	462.6	2303p1	71.43	0.212	13.30	1.79	0.076	0.35	1.34	2.61	4.42	0.031	4.67	100.33
1519.1/1519.3	463.1	2304p1	70.94	0.070	10.56	0.80	0.050	0.18	2.98	1.18	2.38	nd	10.87	100.11
1538.5/1538.6	469.0	2305p1	72.74	0.075	11.79	0.88	0.052	0.16	1.53	2.04	4.02	nd	6.86	100.31
1560.1/1560.5	475.6	2306p1	71.13	0.072	11.96	0.88	0.050	0.27	2.09	1.61	3.47	nd	8.78	100.47
1567.1/1567.3	477.7	2307p1	69.35	0.109	11.55	1.09	0.034	0.47	3.01	0.92	2.47	nd	10.97	100.14
1567.1/1567.3b	477.7	2307p2	74.01	0.057	9.96	0.66	0.029	0.28	2.31	1.08	2.44	nd	9.05	100.04
1581.2/1581.5	482.0	2308p1	66.67	0.150	12.93	1.31	0.046	0.38	3.10	1.42	3.36	0.018	10.67	100.18
1581.2/1581.8b	482.0	2308p2	76.19	0.066	8.56	0.67	0.028	0.14	2.20	0.92	2.44	nd	8.74	100.04
1601.5/1601.8	488.2	2310p1	70.71	0.181	12.28	1.55	0.047	0.52	2.78	1.88	2.87	0.032	7.38	100.38
1622.6/1622.9	494.7	2312p1	70.63	0.137	12.00	1.40	0.061	0.54	2.35	1.40	3.00	0.025	8.67	100.34
1636.5/1636.8	498.9	2313p1	72.46	0.096	11.55	1.14	0.048	0.40	1.95	1.36	3.11	nd	7.97	100.19
1647.7/1647.9	502.3	2314p1	78.62	0.091	11.12	1.14	0.066	nd	0.39	2.65	5.36	nd	0.75	100.26
1688.2/1688.4	514.6	2316p1	75.91	0.112	12.82	1.32	0.079	nd	0.51	3.52	5.26	0.011	0.68	100.32
1741.0/1741.3	530.7	2318p1	74.96	0.117	13.15	1.37	0.079	nd	0.59	3.84	4.73	0.012	0.71	99.65
1796.7/1797.0	547.7	2321p1	75.28	0.113	13.18	1.33	0.051	nd	0.56	3.99	4.72	0.010	0.73	100.06
1843.4/1843.7	562.0	2323p1	75.07	0.112	13.14	1.38	0.086	nd	0.61	3.90	4.86	0.012	0.70	99.97
1867.5/1868.1	569.4	2324p1	73.58	0.129	12.74	1.42	0.085	0.12	1.02	3.51	4.27	0.015	3.05	100.03
1893.8/1894.1	577.3	2325p1	72.35	0.127	12.84	1.44	0.064	0.16	1.08	3.09	3.82	0.013	5.16	100.28
1913.4/1914.9	583.7	2326p1	71.54	0.130	12.58	1.44	0.091	0.17	0.98	2.92	4.18	0.019	6.26	100.43
1938.5/1938.7	590.9	2327p1	70.41	0.139	12.03	1.41	0.072	0.14	1.07	3.36	3.71	0.018	7.74	100.20
1962.8/1963.1	598.4	2328p1	69.12	0.151	12.51	1.52	0.072	0.15	1.06	3.70	3.53	0.021	8.44	100.39

Appendix VIIIa. Major element XRF results (wt%) for drill hole USW SD-7 samples (continued).

Sample	Depth (m)	LANL #	SiO_2	TiO_2	Al_2O_3	Fe_2O_3	MnO	MgO	CaO	Na_2O	K_2O	P_2O_5	LOI	Total
1988.6/1989.0	606.2	2329p1	69.79	0.118	12.33	1.36	0.036	0.17	1.04	3.57	3.12	0.011	8.92	100.53
2010.2/2010.5	612.8	2330p1	68.51	0.086	11.97	1.13	0.026	nd	1.02	3.87	3.21	nd	10.58	100.49
2021.3/2021.6	616.2	2331p1	71.03	0.097	11.48	1.30	0.031	nd	0.89	3.58	3.41	nd	8.70	100.61
2035.1/2035.3	620.4	2332p1	69.12	0.108	12.58	1.32	0.083	0.11	1.03	3.74	3.42	0.008	9.00	100.62
2062.6/2062.8	628.7	2334p1	69.44	0.108	12.30	1.47	0.143	nd	1.03	3.68	3.45	0.013	8.77	100.50
2094.2/2094.6	638.4	2336p1	69.08	0.118	12.26	1.82	0.153	nd	1.16	3.64	3.23	0.011	9.24	100.81
2133.7/2133.9	650.4	2338p1	68.66	0.106	12.33	1.25	0.025	nd	1.27	3.72	3.09	0.009	10.07	100.61
2159.6/2159.8	658.3	2339p1	68.71	0.144	12.95	1.68	0.120	0.26	1.34	3.43	3.29	0.026	9.07	101.11
2179.2/2179.4	664.3	2340p1	65.36	0.244	16.23	2.09	0.127	0.35	1.42	2.60	8.13	0.048	3.47	100.27
2180.0/2180.2	664.5	2341p1	77.38	0.119	11.85	1.19	0.082	nd	0.51	3.21	5.15	0.016	0.53	100.16
2201.7/2201.9	671.1	2342p1	74.87	0.159	13.48	1.52	0.078	0.12	0.70	3.47	5.43	0.023	0.63	100.62
2225.3/2225.4	678.3	2343p1	74.05	0.191	13.58	1.61	0.089	0.17	0.94	3.85	4.74	0.034	0.69	100.13

Analyses below the detection limit are designated as nd.

Appendix VIIIb. Minor element XRF results (ppm) for drill hole USW SD-7 samples.

Sample	Depth (m)	LANL #	V	Cr	Ni	Zn	Rb	Sr	Y	Zr	Nb	Ba	Total Traces (wt %)
1278.6/1278.9	389.8	2030p1	164.4	11.0	31.8	58.0	165.6	35.2	34.1	122.1	25.5	84.9	0.09
1321.5/1321.6	402.8	2032p1	155.5	nd	40.8	57.6	183.8	28.6	31.4	122.4	14.6	75.3	0.09
1350.5/1350.7	411.7	2034p1	15.8	nd	10.1	52.7	154.7	96.8	19.9	120.8	21.4	105.4	0.07
1421.1/1421.3	433.2	2297p1	22.5	nd	10.1	55.1	176.0	160.4	19.5	125.7	19.1	56.2	0.08
1467.4/1457.5	444.2	2299p1	63.4	nd	37.5	47.4	176.5	38.4	31.2	123.4	17.9	65.9	0.07
1471.5/1471.8	448.6	2300p1	nd	nd	10.5	49.2	178.8	40.7	28.2	122.1	16.6	80.1	0.06
1493.2/1493.6	455.2	2301p1	nd	nd	nd	60.1	129.8	96.9	30.2	132.8	23.6	98.1	0.07
1493.2/1493.6b	455.2	2301p2	14.5	nd	nd	36.4	95.8	145.2	20.6	108.1	10.5	168.7	0.07
1513.9/1514.2	461.5	2302p1	nd	nd	95.2	43.8	171.4	95.8	29.5	120.3	29.5	112.9	0.08
1517.3/1517.6	462.6	2303p1	15.0	8.7	14.3	50.2	187.2	157.5	22.0	142.2	21.8	234.1	0.10
1519.1/1519.3	463.1	2304p1	12.8	nd	14.0	38.7	98.9	495.5	13.8	95.5	13.8	65.5	0.10
1538.5/1538.6	469.0	2305p1	147.3	nd	45.6	43.3	168.5	544.5	27.7	111.3	10.5	108.3	0.15
1560.1/1560.5	475.6	2306p1	nd	nd	nd	47.6	163.7	747.8	21.9	116.2	28.8	98.3	0.15
1567.1/1567.3	477.7	2307p1	23.3	nd	33.5	47.1	97.7	950.1	7.2	132.9	22.6	157.6	0.18
1567.1/1567.3b	477.7	2307p2	171.1	nd	43.7	37.3	98.1	745.5	21.5	103.2	8.9	89.4	0.16
1581.2/1581.5	482.0	2308p1	20.7	nd	15.6	47.5	143.2	247.7	15.0	126.7	23.3	306.6	0.11
1581.2/1581.8b	482.0	2308p2	nd	nd	nd	30.6	101.4	180.7	nd	72.8	15.3	210.4	0.07
1601.5/1601.8	488.2	2310p1	22.9	nd	10.6	40.3	107.6	358.3	15.4	138.8	nd	579.8	0.15
1622.6/1622.9	494.7	2312p1	nd	nd	58.3	55.8	108.5	124.4	50.3	158.3	25.5	447.5	0.12
1636.5/1636.8	498.9	2313p1	179.0	nd	26.3	63.1	99.5	72.5	43.1	150.0	29.2	205.9	0.11
1647.7/1647.9	502.3	2314p1	nd	nd	57.6	46.2	131.3	37.5	31.1	151.1	22.0	264.3	0.09
1688.2/1688.4	514.6	2316p1	nd	nd	9.9	63.8	184.8	57.9	45.0	180.5	23.2	282.4	0.10
1741.0/1741.3	530.7	2318p1	nd	nd	nd	64.6	165.2	65.1	36.7	194.3	26.9	228.9	0.09
1796.7/1797.0	547.7	2321p1	45.0	nd	30.3	69.5	171.8	66.3	31.3	179.3	20.3	257.5	0.11
1843.4/1843.7	562.0	2323p1	nd	nd	17.2	55.7	183.9	61.0	32.2	184.7	32.6	248.2	0.10
1867.5/1868.1	569.4	2324p1	nd	nd	82.3	48.8	113.3	114.9	37.0	177.7	25.1	260.9	0.10
1893.8/1894.1	577.3	2325p1	195.0	nd	23.5	70.4	130.9	93.8	27.3	168.0	27.2	230.0	0.12
1913.4/1914.9	583.7	2326p1	20.2	nd	nd	67.4	142.2	75.0	54.3	165.6	28.1	295.5	0.10
1938.5/1938.7	590.9	2327p1	35.2	nd	nd	58.5	140.6	81.4	31.1	162.6	19.5	264.9	0.10
1962.8/1963.1	598.4	2328p1	21.0	nd	27.6	68.1	147.8	83.9	29.9	168.9	28.0	286.6	0.10

Appendix VIIIb. Minor element XRF results (ppm) for drill hole USW SD-7 samples (continued).

Sample	Depth (m)	LANL #	V	Cr	Ni	Zn	Rb	Sr	Y	Zr	Nb	Ba	Total Traces (wt %)
1988.6/1989.0	606.2	2329p1	12.4	nd	21.5	64.6	133.8	53.9	29.7	156.8	24.4	175.1	0.08
2010.2/2010.5	612.8	2330p1	72.5	nd	37.2	53.6	163.8	45.9	29.6	149.4	21.9	105.5	0.08
2021.3/2021.6	616.2	2331p1	98.6	nd	47.7	59.9	142.6	49.3	44.6	144.3	21.9	152.6	0.09
2035.1/2035.3	620.4	2332p1	36.8	nd	22.3	68.0	141.0	52.3	28.4	152.9	29.7	259.0	0.10
2062.6/2062.8	628.7	2334p1	nd	nd	nd	63.3	138.1	49.6	64.2	161.9	18.1	352.0	0.10
2094.2/2094.6	638.4	2336p1	nd	nd	48.0	110.8	142.1	46.0	34.7	161.6	33.1	336.7	0.11
2133.7/2133.9	650.4	2338p1	nd	nd	29.5	71.2	145.0	59.0	22.9	151.1	24.3	170.1	0.08
2159.6/2159.8	658.3	2339p1	25.3	nd	14.3	68.9	129.1	99.5	29.1	161.3	22.0	281.5	0.10
2179.2/2179.4	664.3	2340p1	nd	nd	25.7	80.0	188.9	368.9	22.0	299.2	28.0	671.0	0.20
2180.0/2180.2	664.5	2341p1	nd	nd	23.4	52.5	162.4	112.2	33.6	170.7	20.7	518.1	0.13
2201.7/2201.9	671.1	2342p1	13.0	nd	nd	50.3	165.2	153.5	36.5	197.7	14.1	465.2	0.13
2225.3/2225.4	678.3	2343p1	66.8	nd	24.4	72.7	157.9	243.5	26.0	246.0	26.4	669.8	0.18

Analyses below the detection limit are designated as nd.

Appendix IXa. Major element XRF results (wt%) for drill hole USW SD-9 samples.

Sample	Depth (m)	LANL #	SiO_2	TiO_2	Al_2O_3	Fe_2O_3	MnO	MgO	CaO	Na_2O	K_2O	P_2O_5	LOI	Total
1397.1/1397.2	425.9	2394p1	74.72	0.096	12.42	0.94	0.068	nd	0.52	3.59	4.78	nd	3.19	100.39
1421.5/1421.5	433.3	2396p1	74.82	0.095	12.35	0.92	0.073	nd	0.59	3.14	5.04	nd	3.33	100.42
1425.5/1426.0	434.6	2397p1	71.08	0.091	16.22	0.91	0.078	nd	0.74	2.59	4.45	nd	3.97	100.25
1428.2/1428.4	435.4	2398p1	73.55	0.094	13.25	0.98	0.121	nd	0.89	2.51	4.40	nd	4.73	100.59
1431.7/1431.9	436.4	1889p1	72.60	0.104	13.55	1.06	0.114	nd	1.08	2.45	4.19	nd	5.21	100.43
1434.4/1434.5	437.2	1890p1	71.26	0.100	11.76	0.98	0.095	nd	2.04	2.24	3.70	nd	8.19	100.44
1440.1/1440.2	439.0	1891p1	72.49	0.091	12.40	0.94	0.085	nd	1.31	2.34	4.30	nd	6.46	100.46
1447.8/1448.0	441.4	1892p1	74.98	0.096	12.03	0.97	0.111	nd	0.81	2.66	4.75	nd	4.13	100.59
1457.2/1457.6	444.3	1893p1	68.86	0.089	11.98	0.89	0.067	nd	1.99	2.01	4.19	nd	10.36	100.51
1460.5/1460.8	445.3	1894p1	71.64	0.091	11.09	0.90	0.058	nd	1.71	1.88	4.15	nd	9.06	100.64
1465.9/1466.1	446.9	1895p1	68.62	0.099	12.67	1.03	0.072	nd	1.91	2.19	4.43	nd	9.17	100.26
1486.3/1486.6	453.1	2238p1	72.60	0.063	10.83	0.79	0.052	nd	1.33	2.03	4.28	nd	8.78	100.81
1508.5/1508.8	459.9	2239p1	71.56	0.071	11.30	0.85	0.061	nd	1.10	2.35	4.66	nd	8.50	100.52
1527.1/1527.4	465.6	2240p1	70.81	0.077	12.72	0.94	0.037	nd	1.19	2.14	3.89	nd	8.56	100.42
1547.1/1547.4	471.6	2241p1	72.17	0.070	11.37	0.87	0.030	nd	0.88	2.59	4.53	0.009	8.14	100.70
1585.4/1585.6	483.3	2243p1	72.31	0.076	12.16	0.89	0.079	nd	0.71	2.78	4.98	nd	6.84	100.88
1626.2/1626.3	495.7	2245p1	71.54	0.068	11.15	0.82	0.044	nd	0.72	2.74	4.58	nd	8.56	100.27
1669.7/1669.9	509.0	2247p1	71.38	0.070	11.33	0.84	0.042	nd	0.83	2.93	4.14	nd	9.08	100.71
1711.7/1711.9	521.8	2249p1	71.39	0.071	11.52	0.86	0.020	nd	0.84	2.80	4.26	nd	8.89	100.72
1752.6/1753.0	534.3	2251p1	73.14	0.079	11.55	0.88	0.051	nd	0.86	2.85	4.20	nd	6.99	100.68
1770.7/1770.9	539.8	2252p1	70.92	0.123	12.18	1.16	0.034	0.19	1.04	2.66	4.12	0.019	8.27	100.80
1797.8/1798.1	548.1	2254p1	71.61	0.144	12.41	1.26	0.043	0.19	1.52	2.97	4.00	0.037	6.01	100.36
1821.1/1821.6	555.2	2255p1	71.57	0.100	12.54	1.18	0.134	0.59	1.22	2.11	3.61	0.012	7.50	100.70
1840.4/1840.6	561.0	2256p1	71.11	0.095	12.34	1.15	0.053	0.12	1.08	2.13	5.18	nd	7.53	100.87
1864.6/1864.7	568.4	2257p1	78.47	0.076	8.81	0.91	0.075	nd	1.50	2.25	2.14	nd	6.81	101.11
1866.2/1866.5	568.9	2258p1	71.67	0.100	12.48	1.25	0.161	0.13	1.72	2.51	3.14	0.011	7.47	100.77
1885.6/1886.0	574.9	2259p1	76.07	0.107	13.08	1.30	0.074	nd	0.45	3.19	5.98	0.009	0.64	100.99

Analyses below the detection limit are designated as nd.

Appendix IXb. Minor element XRF results (ppm) for drill hole USW SD-9 samples.

Sample	Depth (m)	LANL #	V	Cr	Ni	Zn	Rb	Sr	Y	Zr	Nb	Ba	Total Traces (wt %)
1397.1/1397.2	425.9	2394p1	37.5	nd	36.0	43.2	188.2	15.5	38.0	120.6	29.3	65.7	0.07
1421.5/1421.5	433.3	2396p1	22.1	nd	33.4	72.5	188.9	15.4	23.7	118.7	20.3	nd	0.06
1425.5/1426.0	434.6	2397p1	nd	nd	38.6	50.8	175.2	17.9	24.1	301.5	23.6	321.9	0.12
1428.2/1428.4	435.4	2398p1	14.1	8.7	19.0	52.2	179.0	19.8	32.3	117.3	24.1	79.8	0.07
1431.7/1431.9	436.4	1889p1	11.0	9.9	10.4	60.4	164.3	22.0	21.6	128.4	21.9	51.2	0.06
1434.4/1434.5	437.2	1890p1	nd	nd	13.1	53.8	124.2	97.3	19.7	121.9	26.6	98.3	0.07
1440.1/1440.2	439.0	1891p1	nd	nd	nd	44.1	171.1	36.8	22.4	110.5	20.6	nd	0.05
1447.8/1448.0	441.4	1892p1	nd	nd	15.4	45.9	184.2	18.3	26.0	119.9	28.0	56.2	0.06
1457.2/1457.6	444.3	1893p1	nd	nd	30.9	43.4	184.7	36.4	18.3	111.6	32.3	83.6	0.07
1460.5/1460.8	445.3	1894p1	17.3	nd	nd	43.5	179.5	34.7	33.0	108.1	15.2	88.5	0.06
1465.9/1466.1	446.9	1895p1	11.4	nd	17.3	42.4	179.5	42.5	8.2	122.8	30.6	60.4	0.06
1486.3/1486.6	453.1	2238p1	nd	nd	20.6	36.1	173.8	33.8	26.9	77.1	16.7	93.8	0.06
1508.5/1508.8	459.9	2239p1	nd	nd	nd	48.3	185.8	33.9	22.1	88.0	18.4	103.1	0.06
1527.1/1527.4	465.6	2240p1	nd	nd	nd	63.6	159.6	29.2	33.2	92.1	31.7	55.9	0.06
1547.1/1547.4	471.6	2241p1	nd	8.3	nd	43.0	168.8	27.4	19.5	83.8	16.7	nd	0.04
1585.4/1585.6	483.3	2243p1	11.8	nd	nd	38.5	191.7	37.8	18.1	98.1	22.0	93.9	0.06
1626.2/1626.3	495.7	2245p1	nd	nd	nd	36.4	182.7	32.1	35.8	82.9	23.1	88.8	0.06
1669.7/1669.9	509.0	2247p1	nd	nd	30.9	43.5	179.2	31.1	35.2	85.8	13.6	88.4	0.06
1711.7/1711.9	521.8	2249p1	nd	nd	16.3	41.1	176.3	35.4	18.9	91.3	24.7	97.8	0.06
1752.6/1753.0	534.3	2251p1	13.0	nd	13.8	36.4	169.0	43.4	28.9	103.1	17.9	192.3	0.07
1770.7/1770.9	539.8	2252p1	nd	nd	nd	34.3	160.8	91.1	31.5	101.9	24.8	223.5	0.08
1797.8/1798.1	548.1	2254p1	17.5	nd	10.9	40.1	143.1	225.6	15.5	139.8	10.1	735.6	0.16
1821.1/1821.6	555.2	2255p1	21.9	nd	nd	58.9	121.7	79.3	29.9	160.3	19.9	612.7	0.13
1840.4/1840.6	561.0	2256p1	nd	nd	15.3	65.7	159.6	67.9	35.0	152.5	28.3	169.7	0.08
1864.6/1864.7	568.4	2257p1	nd	nd	nd	48.1	120.2	30.8	25.0	117.3	24.2	242.1	0.07
1866.2/1866.5	568.9	2258p1	nd	nd	14.8	64.9	122.7	85.0	17.3	167.8	34.9	448.4	0.11
1885.6/1886.0	574.9	2259p1	11.9	nd	20.2	73.9	189.1	53.4	28.2	178.9	19.5	220.8	0.10

Analyses below the detection limit are designated as nd.

Appendix Xa. Major element XRF results (wt%) for drill hole USW SD-12 samples.

Sample	Depth (m)	LANL #	SiO_2	TiO_2	Al_2O_3	Fe_2O_3	MnO	MgO	CaO	Na_2O	K_2O	P_2O_5	LOI	Total
1309.3/1309.6	399.2	1866p1	75.51	0.097	12.46	0.96	0.055	nd	0.51	3.85	4.29	nd	2.73	100.53
1333.2/1333.4	406.4	1868p1	74.16	0.098	12.49	0.94	0.083	nd	0.56	3.42	4.74	nd	3.09	99.64
1351.9/1352.2	412.2	1870p1	74.11	0.099	12.27	0.96	0.078	nd	0.52	3.41	4.86	nd	3.08	99.45
1371.4/1371.5	418.0	1872p1	74.42	0.098	12.18	0.95	0.070	nd	0.50	3.48	4.81	nd	3.03	99.60
1381.1/1381.3	421.0	1873p1	74.48	0.094	12.51	0.96	0.074	nd	0.67	3.33	4.62	nd	3.52	100.34
1388.0/1388.1	423.1	1874p1	74.40	0.089	12.23	0.94	0.077	nd	0.71	3.29	4.54	nd	3.45	99.81
1399.2/1399.3	426.5	1875p1	73.92	0.089	12.36	0.95	0.065	nd	0.81	3.27	4.50	nd	3.48	99.52
1439.9/1440.1	438.9	2261p1	74.13	0.091	12.19	0.98	0.062	nd	0.67	3.12	4.80	nd	3.46	99.57
1458.7/1458.9	444.7	2262p1	72.86	0.091	12.19	0.96	0.061	nd	0.97	2.94	4.50	nd	4.28	98.93
1480.2/1480.5	451.3	2263p1	73.45	0.095	12.13	1.07	0.056	0.10	0.95	2.81	4.51	nd	4.14	99.36
1500.8/1501.0	457.5	2264p1	73.81	0.072	11.92	0.90	0.051	nd	0.97	2.74	4.54	nd	4.52	99.57
1519.8/1520.1	463.3	2265p1	74.11	0.075	12.02	0.89	0.054	nd	0.97	2.73	4.50	nd	4.11	99.52
1540.9/1541.3	469.8	2266p1	73.33	0.079	11.91	0.90	0.055	nd	1.13	2.65	4.32	nd	5.31	99.74
1561.1/1561.3	475.9	2267p1	74.51	0.073	11.91	0.90	0.055	nd	0.73	2.77	4.75	nd	4.25	99.99
1581.3/1581.6	482.1	2268p1	74.09	0.074	12.10	0.89	0.054	nd	0.98	2.76	4.57	nd	5.03	100.60
1600.0/1600.2	487.7	2269p1	72.14	0.082	12.58	1.01	0.056	0.13	1.05	2.46	4.53	nd	5.65	99.75
1600.3	487.8	2269p2	72.74	0.067	11.48	0.83	0.036	nd	1.50	1.77	3.85	nd	6.75	99.08
1601.5/1601.8	488.2	2390p1	68.92	0.072	11.98	0.92	0.044	nd	1.57	2.24	3.74	nd	10.50	100.05
1609.9/1610.4	490.8	2391p1	70.98	0.099	11.95	1.01	0.050	0.12	1.51	2.40	3.80	0.010	8.73	100.75
1620.4/1620.6	494.0	2270p1	73.33	0.131	12.51	1.17	0.041	0.14	1.68	2.48	3.62	0.011	5.85	101.08
1641.4/1641.7	500.4	2271p1	65.77	0.438	15.04	3.65	0.057	0.97	3.00	2.67	3.54	0.144	3.54	99.07
1656.3/1656.8	505.0	2272p1	71.45	0.106	12.23	1.27	0.084	0.28	1.54	2.31	3.46	nd	6.31	99.16
1680.7/1680.9	512.3	2273p1	75.82	0.099	12.18	1.21	0.063	0.12	0.30	2.66	6.15	nd	0.73	99.42
1700.3/1700.6	518.3	2274p1	75.69	0.101	12.77	1.25	0.076	nd	0.42	3.01	5.80	0.010	0.63	99.85
1739.8/1740.2	530.4	2276p1	75.99	0.105	13.17	1.31	0.074	nd	0.54	3.65	4.92	0.010	0.61	100.48
1780.2/1780.4	542.7	2278p1	75.37	0.103	12.81	1.29	0.079	nd	0.51	3.81	4.98	0.009	0.53	99.59
1821.2/1821.6	555.2	2280p1	74.91	0.102	12.87	1.29	0.079	nd	0.50	3.81	4.92	nd	0.47	99.04
1860.0/1860.3	567.0	2282p1	74.28	0.117	13.01	1.40	0.082	0.10	0.56	3.38	5.37	0.014	0.69	99.10
1874.4/1874.5	571.3	2283p1	72.50	0.129	13.46	1.46	0.073	0.30	1.41	2.92	3.64	0.017	3.93	99.96
1891.6/1891.9	576.7	2284p1	67.82	0.148	14.23	1.65	0.076	0.27	1.91	2.87	3.64	0.023	6.43	99.15

Appendix Xa. Major element XRF results (wt%) for drill hole USW SD-12 samples (continued).

Sample	Depth (m)	LANL #	SiO_2	TiO_2	Al_2O_3	Fe_2O_3	MnO	MgO	CaO	Na_2O	K_2O	P_2O_5	LOI	Total
1911.8/1911.9	582.7	2285p1	70.42	0.126	12.88	1.46	0.080	0.20	1.43	2.63	4.06	0.020	5.92	99.31
1929.7/1929.9	588.2	2286p1	71.03	0.138	12.55	1.39	0.131	0.17	1.27	3.05	4.00	0.021	5.73	99.59
1950.0/1950.7	594.6	2287p1	69.38	0.160	12.59	1.49	0.055	0.18	1.19	3.34	3.96	0.024	6.15	98.61

Analyses below the detection limit are designated as nd.

Appendix Xb. Minor element XRF results (ppm) for drill hole USW SD-12 samples.

Sample	Depth (m)	LANL #	V	Cr	Ni	Zn	Rb	Sr	Y	Zr	Nb	Ba	Total Traces (wt %)
1309.3/1309.6	399.2	1866p1	26.1	nd	8.3	41.8	179.0	24.7	30.0	115.4	17.0	52.4	0.060
1333.2/1333.4	406.4	1868p1	nd	nd	nd	44.2	180.8	58.3	35.9	113.4	19.5	73.1	0.063
1351.9/1352.2	412.2	1870p1	nd	nd	nd	41.8	181.2	35.4	26.6	108.1	21.7	73.2	0.058
1371.4/1371.5	418.0	1872p1	11.7	nd	14.7	28.0	178.9	22.5	34.5	112.5	19.5	59.5	0.058
1381.1/1381.3	421.0	1873p1	13.2	nd	10.8	40.7	182.1	247.4	31.3	130.4	16.7	38.9	0.086
1388.0/1388.1	423.1	1874p1	20.4	nd	8.1	39.4	174.9	155.2	31.6	119.5	17.8	45.9	0.074
1399.2/1399.3	426.5	1875p1	7.5	nd	12.5	37.1	169.8	65.4	25.6	109.4	19.4	43.7	0.059
1439.9/1440.1	438.9	2261p1	nd	nd	6.1	39.8	180.4	32.9	24.9	108.6	21.0	66.5	0.058
1458.7/1458.9	444.7	2262p1	nd	nd	nd	43.4	169.8	44.5	38.5	118.3	17.9	113.9	0.065
1480.2/1480.5	451.3	2263p1	9.3	nd	nd	38.4	188.5	51.0	30.9	92.8	20.3	125.0	0.066
1500.8/1501.0	457.5	2264p1	nd	nd	nd	38.0	180.5	40.0	34.5	91.8	10.3	57.0	0.054
1519.8/1520.1	463.3	2265p1	nd	nd	nd	41.1	187.6	41.8	23.9	88.9	23.8	142.8	0.065
1540.9/1541.3	469.8	2266p1	16.3	nd	18.8	39.1	178.5	37.1	23.1	92.5	23.1	113.7	0.065
1561.1/1561.3	475.9	2267p1	25.5	nd	10.6	38.5	192.2	26.7	21.0	84.7	21.7	nd	0.051
1581.3/1581.6	482.1	2268p1	11.2	nd	23.6	35.2	179.8	36.0	24.7	91.8	11.4	85.4	0.060
1600.0/1600.2	487.7	2269p1	20.7	nd	18.5	48.4	172.6	41.7	40.6	101.7	14.2	147.0	0.073
1600.3	487.8	2269p2	nd	nd	nd	32.8	156.0	47.3	7.9	82.0	27.5	nd	0.043
1601.5/1601.8	488.2	2390p1	nd	nd	30.0	40.9	145.3	68.3	nd	90.2	19.5	88.5	0.058
1609.9/1610.4	490.8	2391p1	nd	nd	17.1	35.8	162.6	86.7	20.6	103.0	16.3	289.4	0.086
1620.4/1620.6	494.0	2270p1	nd	nd	16.7	44.0	138.1	155.2	20.2	133.8	15.6	501.0	0.120
1641.4/1641.7	500.4	2271p1	81.8	15.2	12.4	70.8	127.5	490.1	23.9	234.0	11.6	1087.7	0.254
1656.3/1656.8	505.0	2272p1	44.3	nd	7.5	59.8	124.6	112.4	36.6	156.4	25.2	462.8	0.123
1680.7/1680.9	512.3	2273p1	12.3	nd	7.3	24.7	182.5	29.7	28.8	159.3	26.0	242.2	0.085
1700.3/1700.6	518.3	2274p1	17.9	nd	27.3	43.0	190.7	50.2	32.7	166.5	21.9	279.8	0.099
1739.8/1740.2	530.4	2276p1	13.5	nd	nd	64.1	167.6	56.7	39.3	171.6	28.5	297.7	0.100
1780.2/1780.4	542.7	2278p1	27.9	nd	21.5	56.3	169.5	57.6	31.9	174.2	27.8	249.8	0.099
1821.2/1821.6	555.2	2280p1	nd	nd	10.6	34.1	175.5	56.1	37.5	160.0	26.9	234.0	0.088
1860.0/1860.3	567.0	2282p1	7.0	nd	7.6	44.6	197.4	55.3	47.1	163.7	28.8	244.1	0.095
1874.4/1874.5	571.3	2283p1	nd	nd	nd	58.0	100.2	247.2	40.2	187.8	27.3	275.1	0.113
1891.6/1891.9	576.7	2284p1	20.9	12.9	nd	59.8	131.5	110.3	40.2	178.2	23.2	254.0	0.101

Appendix Xb. Minor element XRF results (ppm) for drill hole USW SD-12 samples (continued).

Sample	Depth (m)	LANL #	V	Cr	Ni	Zn	Rb	Sr	Y	Zr	Nb	Ba	Total Traces (wt %)
1911.8/1911.9	582.7	2285p1	nd	nd	7.1	48.8	142.5	74.0	33.9	159.3	24.1	239.5	0.087
1929.7/1929.9	588.2	2286p1	16.5	nd	nd	62.9	141.5	80.7	34.4	166.4	24.9	354.8	0.105
1950.0/1950.7	594.6	2287p1	nd	9.0	nd	64.6	153.2	88.3	31.4	174.1	24.8	234.6	0.094

Analyses below the detection limit are designated as nd.

Encl. 2

PUBLICATION TRAVELER

SECTION I. (Author completes)

TITLE: Mineralogic Variation in Drill Holes USW NRG-6, 7/7a, SD-7, 9, 12, and UZ#14

AUTHOR(S): S.J. Chipera, D.T. Vaniman, D.L. Bish, and J.W. Carey

WBS NO: 1.2.3.2.1 UNIQUE IDENTIFIER: LA-EES-1-TIP-97-010 LOS ALAMOS DTN NO.: (If applicable) LADV8313 21AQ97 .001

CHECK ONE	FOR TIPS:	
☐ STUDY PLAN	☐ ABSTRACT	☐ LA MANUSCRIPT REPORT
☒ TIP	☒ MILESTONE (Number SP321BM4)	☐ JOURNAL ARTICLE
	☐ CONFERENCE PROCEEDINGS	☐ OTHER

NAME OF CONFERENCE, DATE, NAME OF JOURNAL ARTICLE, ETC.

SECTION II. (TPO Completes)

I HAVE REVIEWED THE TIP OR STUDY PLAN FOR CONTENT, QUALITY ASSURANCE, AND POLICY.

COMMENTS ATTACHED: ☐ YES ☑ NO (If YES, a Review Sheet will be attached)

TPO: Gilles Y. Bussod (Print name) [signature] (Signature) 6-4-97 (Date)

SECTION III. (Author completes)

ALL REVIEW COMMENTS HAVE BEEN RESOLVED.

AUTHOR: _____ Print name _____ Signature _____ Date

SECTION IV. (TPO Completes)

THIS TIP OR STUDY PLAN IS ACCEPTABLE AND MAY BE PUBLISHED AS APPROPRIATE

TPO: _____ Print name _____ Signature _____ Date

Los Alamos
Yucca Mountain Site Characterization Project

LANL-YMP-QP-03.23

TIP/STUDY PLANS REVIEW RESULTS

SECTION I. (Preparer completes)

UNIQUE IDENTIFIER: LA-EES-1-TIP-97-010 REVISION: 0 TITLE: Mineralogic Variation in Drill Holes USW NRG-6, 7/7a, SD-7, 9, 12, and UZ#14

PREPARER'S NAME: Steve J. Chipera (Print name) PHONE: 7-1110 MS: D469 DUE BY: 5/29/97

SECTION II. (Reviewer completes)

REVIEWER INSTRUCTIONS:

1. Review the document for applicability, correctness, technical adequacy, and completeness. Additional criteria may be added.
2. For TIPs, data presented are suitable for the intended use as presented in this report.
3. For comments, enter the location of the section and the proposed actions on the review sheet continuation page. If "no comments," check the "No Comments" box.
4. Any changes to original entries must be initialed and dated.
5. After completing the review, return the review sheets to the preparer.
6. After review comments have been addressed, sign, date, and return review sheet(s) to preparer, if applicable.

I HAVE FOLLOWED THE INSTRUCTIONS FOR REVIEWING THIS DOCUMENT.

☒ Comments Attached

☐ No Comments

REVIEWER:	Schon Levy		D462	5/29/97	7-9504
	Print name	Signature	MS or location	Date	Phone

SECTION III. Signature below indicates that all comments have been resolved satisfactorily. N/A ☐

REVIEWER: _____ (Signature) 5/29/97 (Date)

Los Alamos
Yucca Mountain Site Characterization Project

FY 1997 LEVEL 4 DELIVERABLE

WBS 1.2.3.2.1.1.1

SP321BM4

Mineralogic Variation in Drill Holes USW NRG-6, NRG-7/7a, SD-7, SD-9, SD-12, and UZ#14: New Data from 1996-1997 Analyses

FY 1997 LEVEL 4 BASELINE DELIVERABLE SP321 BM4

TO: RON SMITH (Office Manager) DATE: 6/10/97

Reviewer/Tech. Lead (assigned by Office Manager): PAUL DIXON

Due Date for Completion of Review: 6/20/97

Reviewers are responsible for reviewing the attached deliverable against criteria/ description (also attached) and performing a general acceptance review of the deliverable. When the review is complete, reviewers complete the section below and return the form to Terry Grant (MS 423/822C). The reviewer/Office Manager may keep the copy of the deliverable if they wish. Any comments, concerns, or recommendations arising from the review are forwarded by the reviewer to the Office Manager/Tech. Lead for possible action with the organization responsible for the deliverable.

- Review completed on 6-24-97 (Date).
- Comments forwarded to Office Manager/ Tech. Lead? Yes ___ No Comments X
- Release "FYI Courtesy Copy" to DOE Counterpart (D. BRYAN)? Yes X Hold for Revision ___
- Place copy in Site Evaluation Program Operations "Library" for staff use? Yes X Hold for Revision ___

Reviewer Signature Paul Dixon Date 6-24-97

Baseline Deliverable Due Date 6/6/97

Deliverable Received by SPO on 6/6/97

Deliverable Forwarded to DOE Counterpart on 6/25/97

1997

This package contains information for the 21PWR waste package example contained in the "Disposal Criticality Analysis Methodology Topical Report". The contents of the package are as follows:

1. Components list for the 21PWR Waste Package Disposal Container, Document Identifier Number (DI#): BBA000000-01717-3300-00003-00. MOL.19971201.0260

2. A listing of the fuel basket assembly materials. MOL.19971223.0016

3. 21-PWR Waste Package Disposal Container, DI#: BBAA00000-01717-2700-15997-00. MOL.19971222.0262

4. 21-PWR Waste Package Disposal Container Assembly, DI#: BBAA00000-01717-2700-15998-00. MOL.19971222.0299

5. 21-PWR Waste Package Barrier Assembly, DI#: BBAA00000-01717-2700-15999-00. MOL.19971222.0358

6. 21-PWR Waste Package Corrosion Allowance Barrier Assembly, DI#: BBAA00000-01717-2700-16000-00. MOL.19971222.0276

7. 21-PWR Waste Package Corrosion Allowance Shell, DI#: BBAA00000-01717-2700-16001-00. MOL.19971222.0371

8. 21-PWR Waste Package Corrosion Allowance Shell Lid, DI#: BBAA00000-01717-2700-16002-00. MOL.19971222.0384

9. 21-PWR Waste Package Corrosion Resistant Barrier Assembly, DI#: BBAA00000-01717-2700-16003-00. MOL.19971218.0335

10. 21-PWR Waste Package Corrosion Resistant Shell, DI#: BBAA00000-01717-2700-16004-00. MOL.19971222.0100

11. 21-PWR Waste Package Corrosion Resistant Shell Lid, DI#: BBAA00000-01717-2700-16005-00. MOL.19971218.1116

12. 21-PWR Waste Package Basket Side Guide Assembly, DI#: BBAA00000-01717-2700-16006-00. MOL.19971218.0414

13. 21-PWR Waste Package Basket A-Guide, DI#: BBAA00000-01717-2700-16007-00. MOL.19971222.0113

14. 21-PWR Waste Package Basket B-Guide, DI#: BBAA00000-01717-2700-16008-00. MOL.19971222.0126

15. 21-PWR Waste Package Basket Corner Guide Assembly, DI#: BBAA00000-01717-2700-16009-00. MOL.19971222.0141

16. 21-PWR Waste Package Basket Corner Guide, DI#: BBAA00000-01717-2700-16010-00. MOL.19980107.0221

17. 21-PWR Waste Package Basket Stiffener, DI#: BBAA00000-01717-2700-16011-00. MOL.19971222.0457

18. 21-PWR Waste Package Fuel Basket Assembly, DI#: BBAA00000-01717-2700-16012-00. MOL.19971223.0026

19. 21-PWR Waste Package Fuel Basket Plate Assembly, DI#: BBAA00000-01717-2700-16013-00. MOL.19971223.0039

20. 21-PWR Waste Package Fuel Basket A-Plate, DI#: BBAA00000-01717-2700-16014-00. MOL.19971223.0013

21. 21-PWR Waste Package Fuel Basket B-Plate, DI#: BBAA00000-01717-2700-16015-00. MOL.19971218.1103

22. 21-PWR Waste Package Fuel Basket C-Plate, DI#: BBAA00000-01717-2700-16016-00. MOL.19971222.0345

23. 21-PWR Waste Package Fuel Basket D-Plate, DI#: BBAA00000-01717-2700-16017-00. MOL.19971222.0312

24. 21-PWR Waste Package Fuel Basket E-Plate, DI#: BBAA00000-01717-2700-16018-00. MOL.19971224.0093

25. 21-PWR Waste Package Fuel Basket Tube, DI#: BBAA00000-01717-2700-16019-00. MOL.19971222.0325

26. 21-PWR Waste Package Basket Side Cover, DI#: BBAA00000-01717-2700-16020-00. MOL.19971218.0814

27. 21-PWR Waste Package Basket Side Guide Weldment, DI#: BBAA00000-01717-2700-16021-00. MOL.19971218.0911

28. 21-PWR Waste Package Corrosion Allowance Barrier Weldment, DI#: BBAA00000-01717-2700-16022-00. MOL.19971222.0154

29. 21-PWR Waste Package Basket Corner Guide Weldment, DI#: BBAA00000-01717-2700-16023-00. MOL.19971218.0874

30. 21-PWR Waste Package Corrosion Resistant Barrier Weldment, DI#: BBAA00000-01717-2700-16024-00. MOL.19971218.0797

Also included is a page that contains the chemical composition for Neutronit A976 and 978. These compositions come from a copyrighted document that is considered Privileged. The material comes from Bohler Bleche. MOL.19961118.0164 (The open release for this page is still pending.)

NOT SENT AT THIS TIME.

CRWMS/M&O

Drawing Inputs List

Complete only applicable items.

1.

QA: L

Document Affected

2. DOCUMENT IDENTIFIER (Including Rev. No.)

BBAA00000-01717-2700-16012 REV00

3. DRAWING TITLE

21-PWR Waste Package Fuel Basket Assembly

Design Inputs

4.

All design inputs which are identified in this document are for the preliminary stage of the design process. All of the design inputs which have been identified as TBV (to be verified) will require subsequent confirmation (or superseding inputs) as the design proceeds. This document will not directly support any construction, fabrication, or procurement activity and; therefore, is not required to be procedurally controlled as TBV.

The assembly drawing is intended to show the Fuel Basket Tube (BBAA00000-01717-2700-16019), Fuel Basket A-Plate (BBAA00000-01717-2700-16014), Fuel Basket B-Plate (BBAA00000-01717-2700-16015), Fuel Basket C-Plate (BBAA00000-01717-2700-16016), Fuel Basket D-Plate (BBAA00000-01717-2700-16017), and the Fuel Basket E-Plate (BBAA00000-01717-2700-16018) parts in their fully assembled configuration. The inputs for each part are included on the continuation sheets.

Signatures

5.

MICHAEL J. PLINSKI Michael J. Plinski Originator Name/Signature	6/11/97 Date
Scott M. Bennett Scott M. Bennett Checker Name/Signature	6/11/97 Date
T. W. Doering, T. W. Doering Lead Design Engineer Name/Signature	6.13.97 Date

Document Affected

2. DOCUMENT IDENTIFIER (Including Rev. No.)

BBAA00000-01717-2700-16012 REV00

3. DRAWING TITLE

21-PWR Waste Package Fuel Basket Assembly

Design Inputs

4.
Inputs for the Fuel Basket Tube part:

Material Specification: ASTM A 516 Grade 70
Supporting Design Analysis:
1) Waste Package Materials Selection Analysis (BBA000000-01717-0200-00020 REV00)
2) Static Structural Analyses of Waste Packages in Degraded States (BBAA00000-01717-0200-00014 REV00)

Criticality: Fuel Basket Tube thickness of 5 mm is sufficient for WP performance.
Supporting Analysis:
1) Mined Geologic Disposal System Advanced Conceptual Design Report; Volume III; Engineered Barrier Segment/Waste Package (B00000000-01717-5705-00027 REV00)

Radiation Transport: Fuel Basket Tube is not required for radiation shielding performance/safety.
Supporting Analysis:
1) Mined Geologic Disposal System Advanced Conceptual Design Report; Volume III; Engineered Barrier Segment/Waste Package (B00000000-01717-5705-00027 REV00)

Structural: Fuel Basket Tube thickness of 5 mm and a tube length of 4575 mm is sufficient for WP performance.
Supporting Analysis:
1) Static Structural Analyses of Waste Packages in Degraded States (BBAA00000-01717-0200-00014 REV00)
2) UCF WP Static Loads, Thermal Expansion Loads, and Internal Pressure Analysis (BBAAA0000-01717-0200-00001 REV00)

Heat Transfer: Fuel Basket Tube thickness of 5 mm is sufficient for WP performance.
Supporting Analysis:
1) Thermal Evaluation of Preliminary 21 PWR AUCF Design (BBAA00000-01717-0200-00011 REV00)
2) Thermal Evaluation of Preliminary 21 PWR UCF Design-Internal Structures (BBAA00000-01717-0200-00018 REV00)

Interface Requirements: Fuel Basket Tube is required to aid the surface facility loading operation.
Fuel Basket Tube outside dimension measured at the center line of the tube cross section is 236 mm, square. Fuel Basket Tube inside dimension measured at the center line of the tube cross section is 226 mm, square. The top 20 mm of the tube will be flared 10 degrees and the bottom of the tube will not be flared. If the tube corners have a radius, the length from the center of a corner radius on the inside surface of the tube to the center of the adjacent corner radius on the inside surface of the tube is 223.5 mm. The tube corners have an inner radius of 5 mm.
Supporting Analysis:
1) Waste Package Fabrication Process Report (BBA000000-01717-2500-00010 REV01)
2) UCF WP Static Loads, Thermal Expansion Loads, and Internal Pressure Analysis (BBAAA0000-01717-0200-00001 REV00)

Document Affected

2. DOCUMENT IDENTIFIER (Including Rev. No.)

BBAA00000-01717-2700-16012 REV00

3. DRAWING TITLE

21-PWR Waste Package Fuel Basket Assembly

Design Inputs

4.
Inputs for the Fuel Basket A-Plate part:

Material Specification: Neutronit A 978
Supporting Design Analysis:
1) Waste Package Materials Selection Analysis (BBA000000-01717-0200-00020 REV00)

Criticality: Fuel Basket A-Plate thickness of 7 mm, with a natural boron loading of 1.6%, and the plate length must cover 4535 mm for sufficient WP performance. The required plate length may be obtained either as a single plate or a combination of multiple plates as required for fabrication.
Supporting Analysis:
1) Mined Geologic Disposal System Advanced Conceptual Design Report; Volume III; Engineered Barrier Segment/Waste Package (B00000000-01717-5705-00027 REV00)

Radiation Transport: Fuel Basket A-Plate is not required for radiation shielding performance/safety.
Supporting Analysis:
1) Mined Geologic Disposal System Advanced Conceptual Design Report; Volume III; Engineered Barrier Segment/Waste Package (B00000000-01717-5705-00027 REV00)

Structural: Fuel Basket A-Plate thickness of 7 mm is sufficient for WP performance. The required plate length will be obtained with four plates, each plate with length of 1134 mm. Each plate is 1216 mm wide. Each plate will have four slots with centers located nominally 238 mm, 484 mm, 732 mm, and 978 mm from the 1134 mm edge of the plate and with length of 567 mm. The slot openings for all slots will be on the bottom width edge. Two outer slots will be cut 9 mm wide, and two inner slots will be cut 14 mm wide. Each pair of adjacent slots will have a separation of 234 mm to 234.5 mm between the two closest slot edges.
Supporting Analysis:
1) Static Structural Analyses of Waste Packages in Degraded States (BBAA00000-01717-0200-00014 REV00)
2) Waste Package Fabrication Process Report (BBA000000-01717-2500-00010 REV01)
3) UCF WP Static Loads, Thermal Expansion Loads, and Internal Pressure Analysis (BBAAA0000-01717-0200-00001 REV00)

Heat Transfer: Fuel Basket A-Plate thickness of 7 mm is sufficient for WP performance.
Supporting Analysis:
1) Thermal Evaluation of Preliminary 21 PWR AUCF Design (BBAA00000-01717-0200-00011 REV00)
2) Thermal Evaluation of Preliminary 21 PWR UCF Design-Internal Structures (BBAA00000-01717-0200-00018 REV00)

Interface Requirements: No interface function assigned.

Document Affected

2. DOCUMENT IDENTIFIER (Including Rev. No.)

BBAA00000-01717-2700-16012 REV00

3. DRAWING TITLE

21-PWR Waste Package Fuel Basket Assembly

Design Inputs

4.
Inputs for the Fuel Basket B-Plate part:

Material Specification: Neutronit A 978
Supporting Design Analysis:
1) Waste Package Materials Selection Analysis (BBA000000-01717-0200-00020 REV00)

Criticality: Fuel Basket B-Plate thickness of 7 mm, with a natural boron loading of 1.6%, and the plate length must cover 4535 mm for sufficient WP performance. The required plate length may be obtained either as a single plate or a combination of multiple plates as required for fabrication.
Supporting Analysis:
1) Mined Geologic Disposal System Advanced Conceptual Design Report; Volume III; Engineered Barrier Segment/Waste Package (B00000000-01717-5705-00027 REV00)

Radiation Transport: Fuel Basket B-Plate is not required for radiation shielding performance/safety.
Supporting Analysis:
1) Mined Geologic Disposal System Advanced Conceptual Design Report; Volume III; Engineered Barrier Segment/Waste Package (B00000000-01717-5705-00027 REV00)

Structural: Fuel Basket B-Plate thickness of 7 mm is sufficient for WP performance. The required plate length will be obtained with four plates, each plate with a length of 1134 mm. Each plate is 1216 mm wide. Each plate will have four slots with centers located 238 mm, 484 mm, 732 mm, and 978 mm from the 1134 mm edge of the plate and with length of 567 mm. The slot openings for the two interior slots (i.e., the middle two locations) will be on the top width edge, and slot openings for the other two slots will be on the bottom width edge. All bottom slots will be cut 9 mm wide, and all top slots will be cut 14 mm wide. Each pair of adjacent slots will have a separation of 234 mm to 234.5 mm between the two closest slot edges.
Supporting Analysis:
1) Static Structural Analyses of Waste Packages in Degraded States (BBAA00000-01717-0200-00014 REV00)
2) Waste Package Fabrication Process Report (BBA000000-01717-2500-00010 REV01)
3) UCF WP Static Loads, Thermal Expansion Loads, and Internal Pressure Analysis (BBAAA0000-01717-0200-00001 REV00)

Heat Transfer: Fuel Basket B-Plate thickness of 7 mm is sufficient for WP performance.
Supporting Analysis:
1) Thermal Evaluation of Preliminary 21 PWR AUCF Design (BBAA00000-01717-0200-00011 REV00)
2) Thermal Evaluation of Preliminary 21 PWR UCF Design-Internal Structures (BBAA00000-01717-0200-00018 REV00)

Interface Requirements: No interface function assigned.

Document Affected

2. DOCUMENT IDENTIFIER (Including Rev. No.)

BBAA00000-01717-2700-16012 REV00

3. DRAWING TITLE

21-PWR Waste Package Fuel Basket Assembly

Design Inputs

4.
Inputs for the Fuel Basket C-Plate part:

Material Specification: Neutronit A 978
Supporting Design Analysis:
1) Waste Package Materials Selection Analysis (BBA000000-01717-0200-00020 REV00)

Criticality: Fuel Basket C-Plate thickness of 7 mm, with a natural boron loading of 1.6%, and the plate length must cover 4535 mm for sufficient WP performance. The required plate length may be obtained either as a single plate or a combination of multiple plates as required for fabrication.
Supporting Analysis:
1) Mined Geologic Disposal System Advanced Conceptual Design Report; Volume III; Engineered Barrier Segment/Waste Package (B00000000-01717-5705-00027 REV00)

Radiation Transport: Fuel Basket C-Plate is not required for radiation shielding performance/safety.
Supporting Analysis:
1) Mined Geologic Disposal System Advanced Conceptual Design Report; Volume III; Engineered Barrier Segment/Waste Package (B00000000-01717-5705-00027 REV00)

Structural: Fuel Basket C-Plate thickness of 7 mm is sufficient for WP performance. The required plate length will be obtained with four plates, each plate with a length of 1134 mm. Each plate is 731 mm wide. Each plate will have two slots with centers located 241 mm and 490 mm from the 1134 mm edge of the plate and with length of 567 mm. The slot openings will both be on the bottom width edge and be cut 14 mm wide. Slots will have a separation of 234 mm between the two closest slot edges.
Supporting Analysis:
1) Static Structural Analyses of Waste Packages in Degraded States (BBAA00000-01717-0200-00014 REV00)
2) Waste Package Fabrication Process Report (BBA000000-01717-2500-00010 REV01)
3) UCF WP Static Loads, Thermal Expansion Loads, and Internal Pressure Analysis (BBAAA0000-01717-0200-00001 REV00)

Heat Transfer: Fuel Basket C-Plate thickness of 7 mm is sufficient for WP performance.
Supporting Analysis:
1) Thermal Evaluation of Preliminary 21 PWR AUCF Design (BBAA00000-01717-0200-00011 REV00)
2) Thermal Evaluation of Preliminary 21 PWR UCF Design-Internal Structures (BBAA00000-01717-0200-00018 REV00)

Interface Requirements: No interface function assigned.

Document Affected

2. DOCUMENT IDENTIFIER (Including Rev. No.)

BBAA00000-01717-2700-16012 REV00

3. DRAWING TITLE

21-PWR Waste Package Fuel Basket Assembly

Design Inputs

4.
Inputs for the Fuel Basket D-Plate part:

Material Specification: ASTM B 209 Alloy 6061 T6
Supporting Design Analysis:
1) UCF WP Static Loads, Thermal Expansion Loads, and Internal Pressure Analysis (BBAAA0000-01717-0200-00001 REV00)

Criticality: Fuel Basket D-Plate is not required for criticality performance/safety.
Supporting Analysis:
1) Mined Geologic Disposal System Advanced Conceptual Design Report; Volume III; Engineered Barrier Segment/Waste Package (B00000000-01717-5705-00027 REV00)

Radiation Transport: Fuel Basket D-Plate is not required for radiation shielding performance/safety.
Supporting Analysis:
1) Mined Geologic Disposal System Advanced Conceptual Design Report; Volume III; Engineered Barrier Segment/Waste Package (B00000000-01717-5705-00027 REV00)

Structural: Fuel Basket D-Plate thickness of 5 mm is sufficient for WP performance. The required plate length will be obtained with four plates, each plate with length of 1132 mm. Each plate is 1214 mm wide. Each plate will have four slots with centers located nominally 237 mm, 483 mm, 731 mm, and 977 mm from the 1132 mm edge of the plate and with length of 566 mm. The slot openings for all slots will be on the bottom width edge. Two outer slots will be cut 9 mm wide, and two inner slots will be cut 14 mm wide. Each pair of adjacent slots will have a separation of 234 mm to 234.5 mm between the two closest slot edges.
Supporting Analysis:
1) Static Structural Analyses of Waste Packages in Degraded States (BBAA00000-01717-0200-00014 REV00)
2) Waste Package Fabrication Process Report (BBA000000-01717-2500-00010 REV01)
3) UCF WP Static Loads, Thermal Expansion Loads, and Internal Pressure Analysis (BBAAA0000-01717-0200-00001 REV00)

Heat Transfer: Fuel Basket D-Plate thickness of 5 mm is sufficient for WP performance.
Supporting Analysis:
1) Thermal Evaluation of Preliminary 21 PWR AUCF Design (BBAA00000-01717-0200-00011 REV00)
2) Thermal Evaluation of Preliminary 21 PWR UCF Design-Internal Structures (BBAA00000-01717-0200-00018 REV00)

Interface Requirements: No interface function assigned.

Document Affected

2. DOCUMENT IDENTIFIER (Including Rev. No.)

BBAA00000-01717-2700-16012 REV00

3. DRAWING TITLE

21-PWR Waste Package Fuel Basket Assembly

Design Inputs

4.
Inputs for the Fuel Basket E-Plate part:

Material Specification: ASTM B 209 Alloy 6061 T6
Supporting Design Analysis:
1) UCF WP Static Loads, Thermal Expansion Loads, and Internal Pressure Analysis (BBAAA0000-01717-0200-00001 REV00)

Criticality: Fuel Basket E-Plate is not required for criticality performance/safety.
Supporting Analysis:
1) Mined Geologic Disposal System Advanced Conceptual Design Report; Volume III; Engineered Barrier Segment/Waste Package (B00000000-01717-5705-00027 REV00)

Radiation Transport: Fuel Basket E-Plate is not required for radiation shielding performance/safety.
Supporting Analysis:
1) Mined Geologic Disposal System Advanced Conceptual Design Report; Volume III; Engineered Barrier Segment/Waste Package (B00000000-01717-5705-00027 REV00)

Structural: Fuel Basket E-Plate thickness of 5 mm is sufficient for WP performance. The required plate length will be obtained with four plates, each plate with a length of 1132 mm. Each plate is 1214 mm wide. Each plate will have four slots with centers located 237 mm, 483 mm, 731 mm, and 977 mm from the 1132 mm edge of the plate and with length of 566 mm. The slot openings for the two interior slots (i.e., the middle two locations) will be on the top width edge, and slot openings for the other two slots will be on the bottom width edge. All bottom slots will be cut 9 mm wide, and all top slots will be cut 14 mm wide. Each pair of adjacent slots will have a separation of 234 mm to 234.5 mm between the two closest slot edges.
Supporting Analysis:
1) UCF WP Static Loads, Thermal Expansion Loads, and Internal Pressure Analysis (BBAAA0000-01717-0200-00001 REV00)

Heat Transfer: Fuel Basket B-Plate thickness of 5 mm is sufficient for WP performance.
Supporting Analysis:
1) Thermal Evaluation of Preliminary 21 PWR UCF Design-Internal Structures (BBAA00000-01717-0200-00018 REV00)

Interface Requirements: No interface function assigned.

COMPONENTS LIST	DESIGN ORGANIZATION IDENTIFICATION WASTE PACKAGE DEVELOPMENT	CAGE CODE 1.2.2	DOCUMENT IDENTIFIER/ REV NO. BBA000000-01717-3300-00003-00	DATE: 8-7-97	QA DESIGNATOR: N/A
21-PWR WASTE PACKAGE DISPOSAL CONTAINER	ORIGINATOR: NAME/INITIAL DATE MICHAEL J. PLINSKI 8/11/97		LEAD DESIGN ENGINEER: NAME/INITIAL DATE THOMAS W. DOERING 8.11.97		

FIND NO	DRAWING OR DOCUMENT NUMBER	ASSEMBLY NAME	SUBASSEMBLY NAME	COMPONENT NAME	PART NAME	QTY REQ	MATERIAL SPECIFICATION	FABRICATION SPECIFICATION
1	BBAA00000-01717-2700-15999	BARRIERS				1	ASSEMBLY	TBD
2	BBAA00000-01717-2700-16000		CORROSION ALLOWANCE BARRIER			1	SUBASSEMBLY	TBD
3	BBAA00000-01717-2700-16001				CORROSION ALLOWANCE SHELL	1	ASTM A516	TBD
4	BBAA00000-01717-2700-16002				CORROSION ALLOWANCE SHELL LID	2	ASTM A516	TBD
5	BBAA00000-01717-2700-16003		CORROSION RESISTANT BARRIER			1	SUBASSEMBLY	TBD
6	BBAA00000-01717-2700-16004				CORROSION RESISTANT SHELL	1	ASTM B443	TBD
7	BBAA00000-01717-2700-16005				CORROSION RESISTANT SHELL LID	2	ASTM B443	TBD
8	BBAA00000-01717-2700-16006			BASKET SIDE GUIDE		16	COMPONENT	TBD
9	BBAA00000-01717-2700-16007				BASKET A-GUIDE	16	ASTM A516	TBD
10	BBAA00000-01717-2700-16008				BASKET B-GUIDE	32	ASTM A516	TBD
11	BBAA00000-01717-2700-16009			BASKET CORNER GUIDE		16	COMPONENT	TBD
12	BBAA00000-01717-2700-16010				BASKET CORNER GUIDE	16	ASTM A516	TBD
13	BBAA00000-01717-2700-16011				BASKET STIFFENER	32	ASTM A516	TBD
14	BBAA00000-01717-2700-16012	FUEL BASKET				1	ASSEMBLY	TBD
15	BBAA00000-01717-2700-16013		FUEL BASKET PLATE			4	SUBASSEMBLY	TBD
16	BBAA00000-01717-2700-16014				FUEL BASKET A-PLATE	8	NEUTRONIT A 978	TBD
17	BBAA00000-01717-2700-16015				FUEL BASKET B-PLATE	8	NEUTRONIT A 978	TBD
18	BBAA00000-01717-2700-16016				FUEL BASKET C-PLATE	16	NEUTRONIT A 978	TBD
19	BBAA00000-01717-2700-16017				FUEL BASKET D-PLATE	8	ASTM B209 6061T6	TBD
20	BBAA00000-01717-2700-16018				FUEL BASKET E-PLATE	8	ASTM B209 6061T6	TBD
21	BBAA00000-01717-2700-16019				FUEL BASKET TUBE	21	ASTM A516	TBD
22	BBAA00000-01717-2700-16020	BARRIERS		BASKET SIDE COVER		4	ASTM A516	TBD

APERTURE CARD

Also Available on Aperture Card

9903020206-01

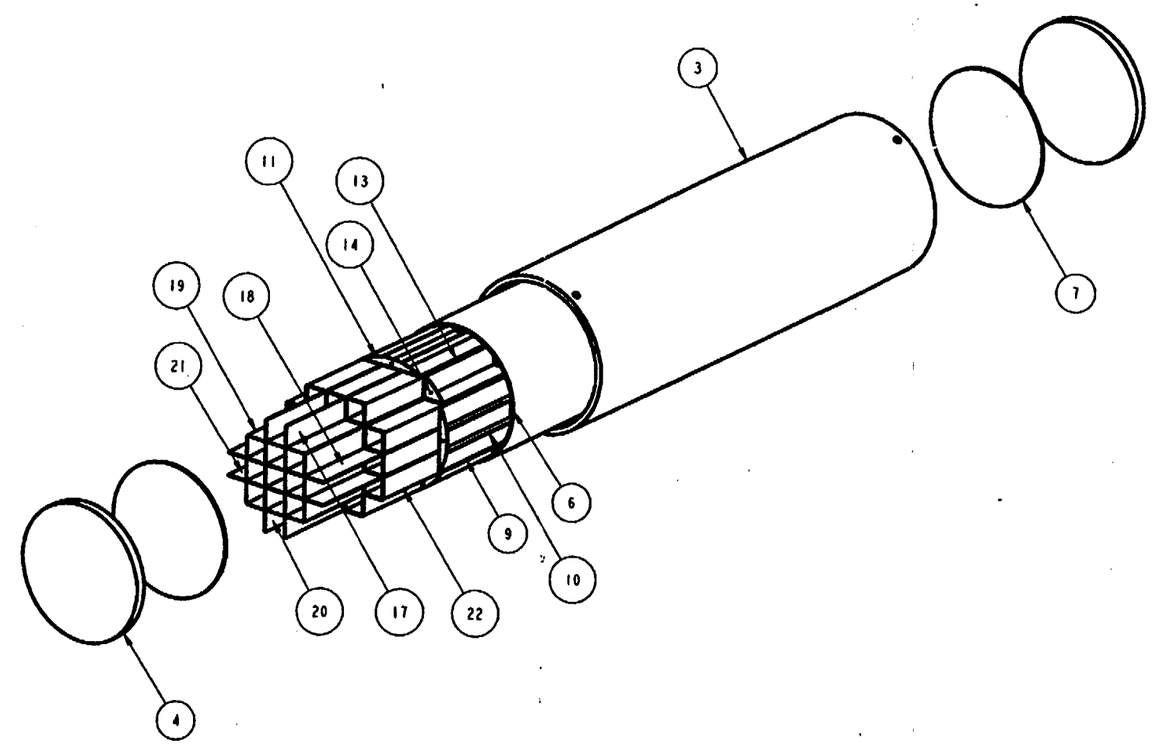

GENERAL NOTES:

1. CORROSION ALLOWANCE AND CORROSION RESISTANT BARRIERS MUST BE CUSTOM MACHINED FOR SHRINK FIT.
2. ALL DIMENSIONS ARE IN MILLIMETERS UNLESS OTHERWISE SPECIFIED.
3. ALL ANGLES +1°-0° UNLESS OTHERWISE SPECIFIED.
4. REMOVE ALL BURRS AND SHARP EDGES EQUIVALENT TO 0.5mm MAXIMUM UNLESS OTHERWISE NOTED.
5. INTERPRET DRAWINGS PER OCRWM DRAFTING SYMBOLS (DI:A00000000-01717-5000-00001 REV 001
6. CORROSION RESISTANT BARRIER WALL THICKNESS IS 20mm MIN.
7. CORROSION ALLOWANCE BARRIER WALL THICKNESS IS 100mm MIN.
8. DRAWINGS DO NOT SHOW TOLERANCING. TOLERANCING WILL BE ADDED IN SUBSEQUENT REVISIONS.
9. ALL LINEAR DIMENSIONS ARE ROUNDED TO NEAREST WHOLE NUMBER.
10. TOP LIDS TO BE SHIPPED SEPARATELY.
11. THIS DRAWING IS BASED ON UNQUALIFIED DATA THAT DEPICTS PRELIMINARY DESIGN AND IS PRESENTED "FOR INFORMATION ONLY". THE INFORMATION IS NOT INTENDED FOR PROCUREMENT, FABRICATION, OR CONSTRUCTION.
12. FOR MATERIAL TYPES SEE 21-PWR WASTE PACKAGE DISPOSAL CONTAINER COMPONENTS LIST (DI: 88A000000-01717-3300-00003 REV 00)
13. SCALE VALUES REPRESENT A DECIMAL RATIO TO FULL SIZE VALUES.
14. WELDING SYMBOLS ARE IN ACCORDANCE WITH AMERICAN WELDING SOCIETY GUIDELINES.

FIND NO	DRAWING OR DOCUMENT NUMBER	ASSEMBLY NAME	SUBASSEMBLY NAME	COMPONENT NAME	PART NAME	QTY REQ
1	88AA00000-01717-2700-15999	BARRIERS				1
2	88AA00000-01717-2700-16000		CORROSION ALLOWANCE BARRIER			1
3	88AA00000-01717-2700-16001				CORROSION ALLOWANCE SHELL	1
4	88AA00000-01717-2700-16002				CORROSION ALLOWANCE SHELL LID	2
5	88AA00000-01717-2700-16003		CORROSION RESISTANT BARRIER			1
6	88AA00000-01717-2700-16004				CORROSION RESISTANT SHELL	1
7	88AA00000-01717-2700-16005				CORROSION RESISTANT SHELL LID	2
8	88AA00000-01717-2700-16006			BASKET SIDE GUIDE		16
9	88AA00000-01717-2700-16007				BASKET A-GUIDE	16
10	88AA00000-01717-2700-16008				BASKET B-GUIDE	32
11	88AA00000-01717-2700-16020			BASKET SIDE COVER		4
12	88AA00000-01717-2700-16009			BASKET CORNER GUIDE		16
13	88AA00000-01717-2700-16010				BASKET CORNER GUIDE	16
14	88AA00000-01717-2700-16011				BASKET STIFFENER	32
15	88AA00000-01717-2700-16012	FUEL BASKET				1
16	88AA00000-01717-2700-16013		FUEL BASKET PLATE			4
17	88AA00000-01717-2700-16014				FUEL BASKET A-PLATE	8
18	88AA00000-01717-2700-16015				FUEL BASKET B-PLATE	8
19	88AA00000-01717-2700-16016				FUEL BASKET C-PLATE	16
20	88AA00000-01717-2700-16017				FUEL BASKET D-PLATE	8
21	88AA00000-01717-2700-16018				FUEL BASKET E-PLATE	8
22	88AA00000-01717-2700-16019				FUEL BASKET TUBE	21

DO NOT SCALE FROM THIS DRAWING

APERTURE CARD

Also Available on Aperture Card

9903020206-02

REV	DESCRIPTION	DATE	DRN	CHG	CHK	VER	L.D.E	Q.A.	P.M.
00	ISSUED APPROVED								

APPROVAL	INITIAL/DATE
DRAWN G. CORNELL	
ORIGINATOR H. PLISKEI	
CHECKED S. BENNETT	
VERIFICATION N/A	
LEAD DESIGN ENGINEER T. BOERING	
QUALITY ASSURANCE S. OANA	
DEPARTMENT MANAGER H. BENTON	

U.S. DEPARTMENT OF ENERGY
YUCCA MOUNTAIN SITE CHARACTERIZATION PROJECT
M&O CIVILIAN RADIOACTIVE WASTE MANAGEMENT SYSTEM MANAGEMENT & OPERATING CONTRACTOR

21-PWR WASTE PACKAGE DISPOSAL CONTAINER

SIZE	DOCUMENT IDENTIFIER	CI IDENTIFIER	DRAWING NO.	REV
D			88AA00000-01717-2700-15997	00
SCALE 0.037	N/A CLASSIFICATION		N.B.S. CAD FILE 1.2.2	

RECORD DESIGNATOR QA:L

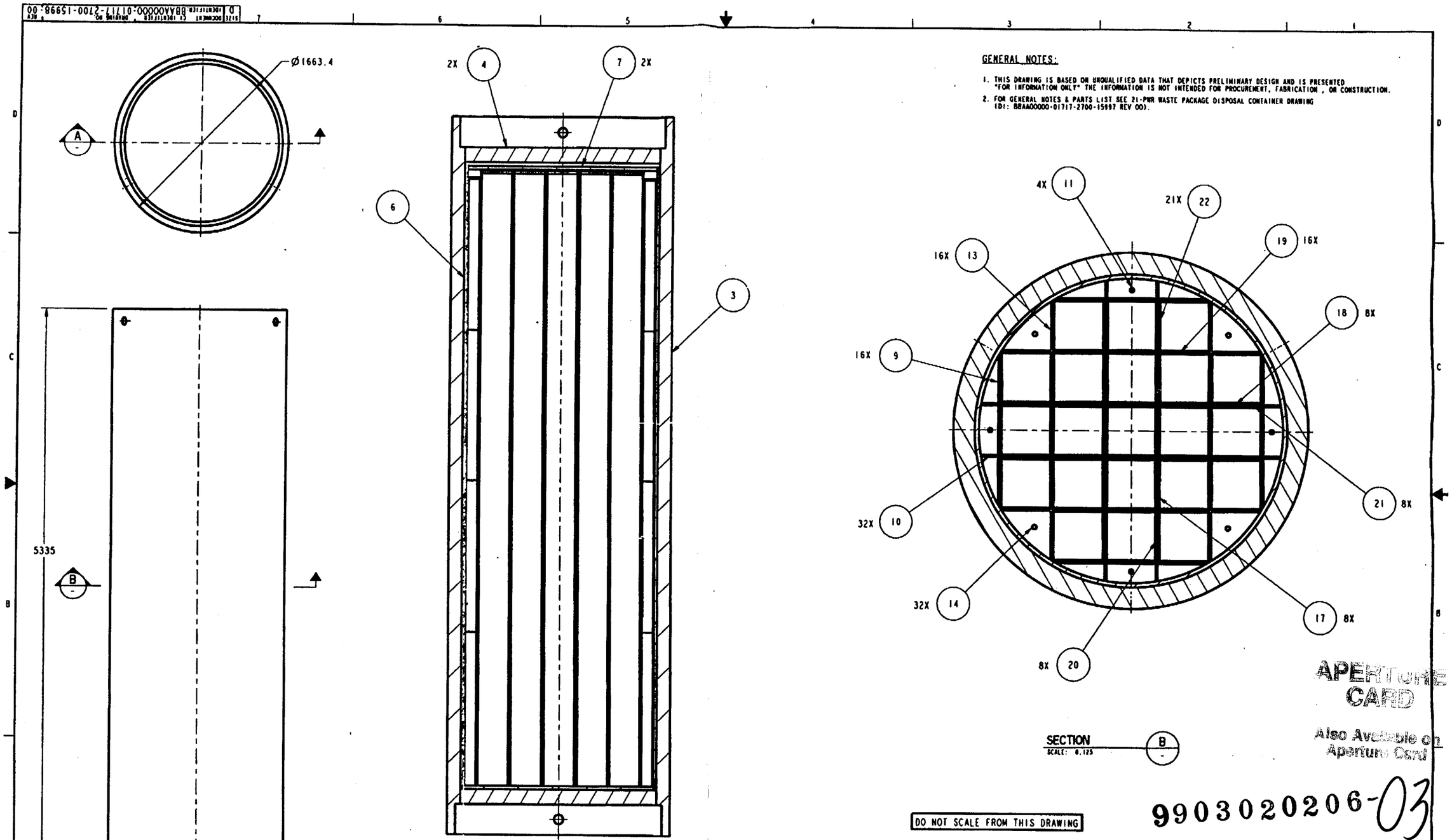
Ø1663.4
A
5335
B
2X 4
7 2X
6
3
SECTION A
SCALE: 0.070
4X 11
21X 22
16X 13
19 16X
18 8X
16X 9
21 8X
32X 10
32X 14
17 8X
8X 20
SECTION B
SCALE: 0.125
DO NOT SCALE FROM THIS DRAWING
9903020206-03
APERTURE CARD
Also Available on Aperture Card
U.S. DEPARTMENT OF ENERGY
YUCCA MOUNTAIN SITE CHARACTERIZATION PROJECT
CIVILIAN RADIOACTIVE WASTE MANAGEMENT SYSTEM
MANAGEMENT & OPERATING CONTRACTOR
21-PWR WASTE PACKAGE
DISPOSAL CONTAINER ASSEMBLY
DOCUMENT IDENTIFIER: BBAA00000-01717-2700-15998-00
SCALE 0.062
U.S. CLASSIFICATION U
U.S. CAD FILE 1.2.2
RECORD DESIGNATOR 04-1

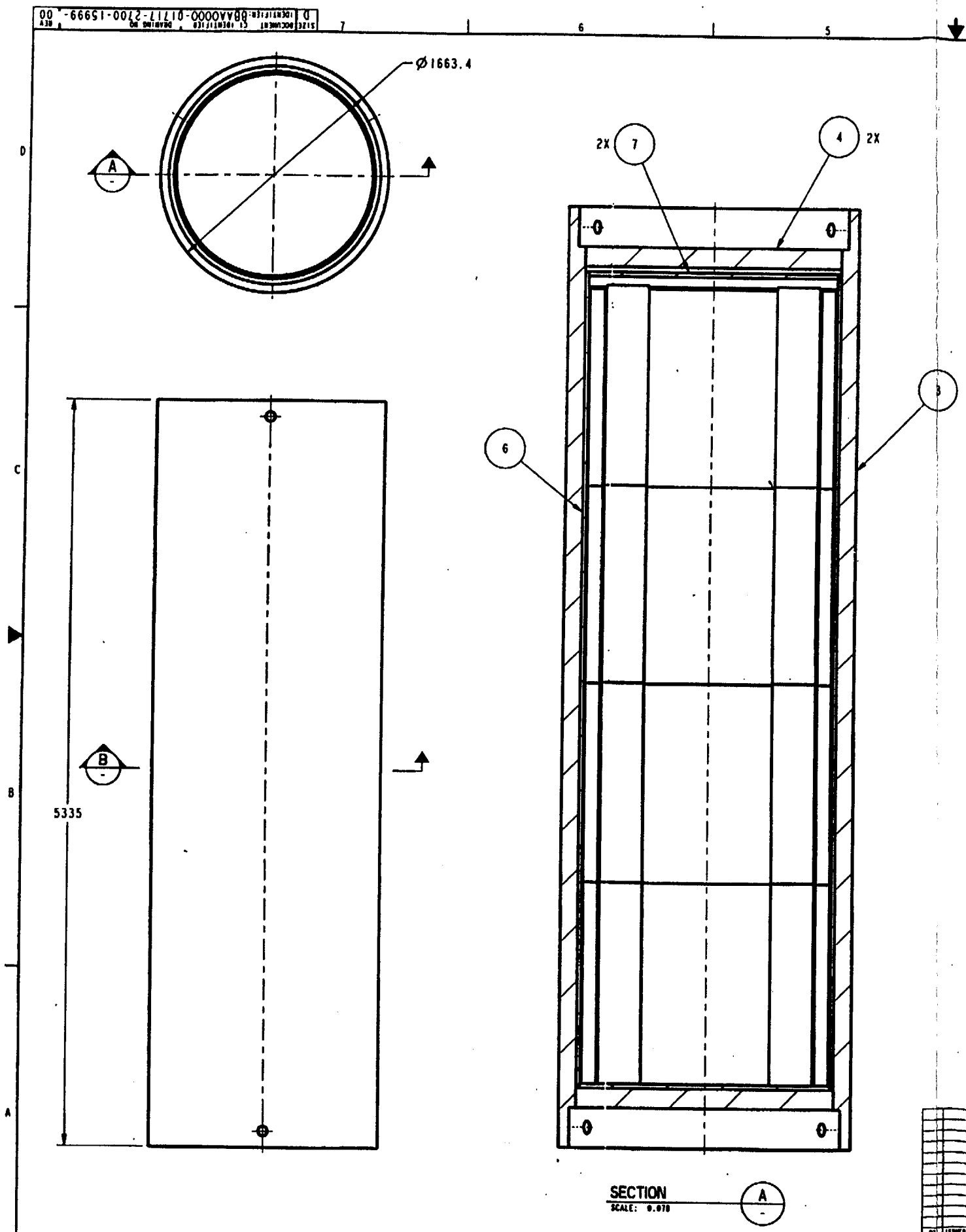

GENERAL NOTES:

1. THIS DRAWING IS BASED ON UNQUALIFIED DATA THAT DEPICTS PRELIMINARY DESIGN AND IS PRESENTED "FOR INFORMATION ONLY" THE INFORMATION IS NOT INTENDED FOR PROCUREMENT, FABRICATION , OR CONSTRUCTION.
2. FOR GENERAL NOTES & PARTS LIST SEE 21-PWR WASTE PACKAGE DISPOSAL CONTAINER DRAWING (ID: BBAA00000-01717-2700-15997 REV 00).

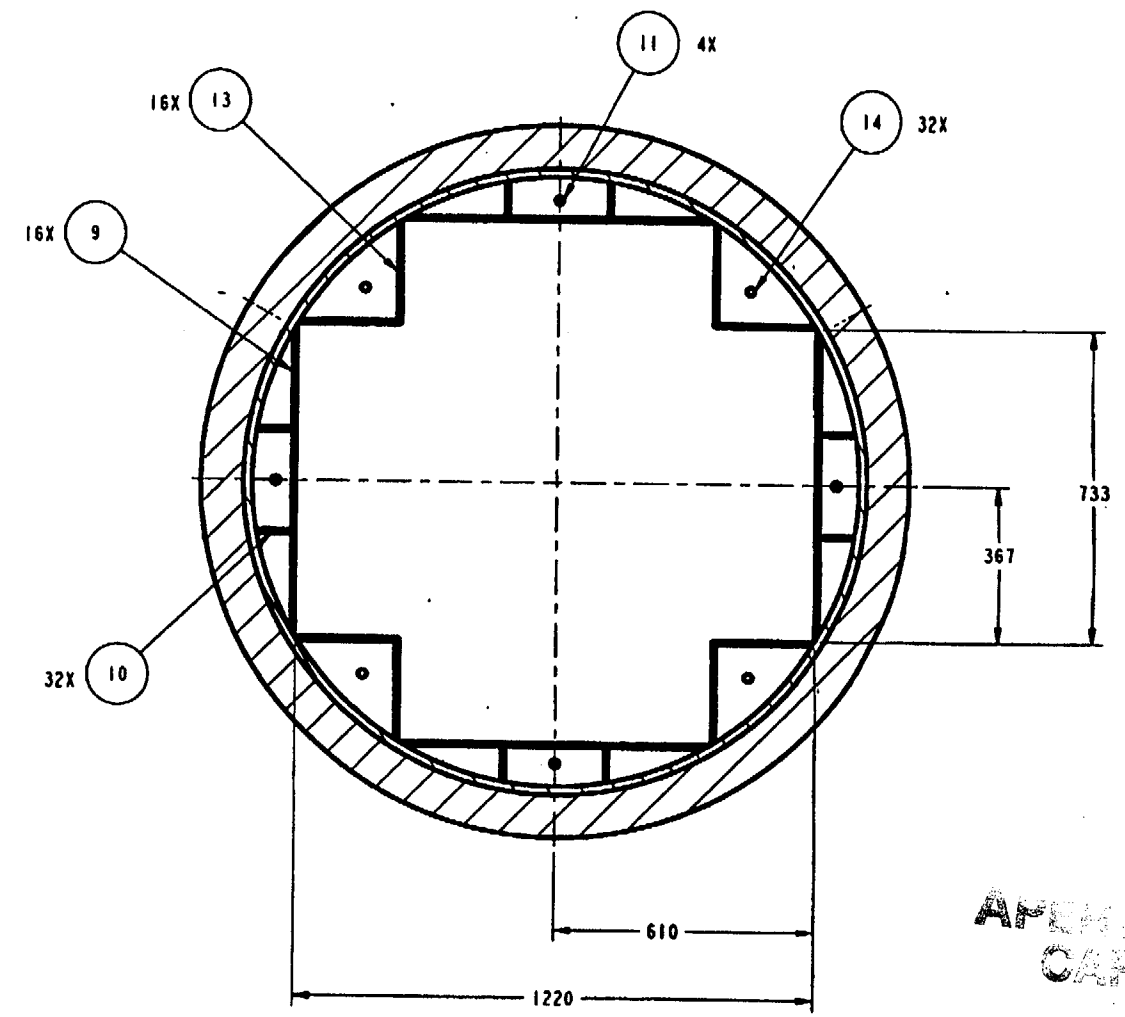

SECTION
SCALE: 0.125
B

APERTURE CARD
Also Available on Aperture Card

9903020206-04

DO NOT SCALE FROM THIS DRAWING

REV	DESCRIPTION	DATE	DRN	ORG	CHK	VER	D.E	Q.A.	D.N.
00	ISSUED APPROVED								

APPROVAL	INITIAL/DATE
DRAWN G. CONNELL	
CONTRIBUTOR M. PLINSKI	
CHECKED S. BENNETT	
VERIFICATION N/A	
LEAD DESIGN ENGINEER T. BOERING	
QUALITY ASSURANCE	
DEPARTMENT MANAGER M. BENTON	

U.S. DEPARTMENT OF ENERGY
YUCCA MOUNTAIN SITE CHARACTERIZATION PROJECT
M&O CIVILIAN RADIOACTIVE WASTE MANAGEMENT SYSTEM
MANAGEMENT & OPERATING CONTRACTOR

21-PWR WASTE PACKAGE
BARRIER ASSEMBLY

SIZE D | DOCUMENT IDENTIFIER: CI IDENTIFIER BBAA00000 | DRAWING NO. 01717-2700-15999- | REV 00
SCALE 0.002 | Q.A. CLASSIFICATION 0 | W.B.S. 1.2.2 | CAD FILE

RECORD DESIGNATOR OA:L

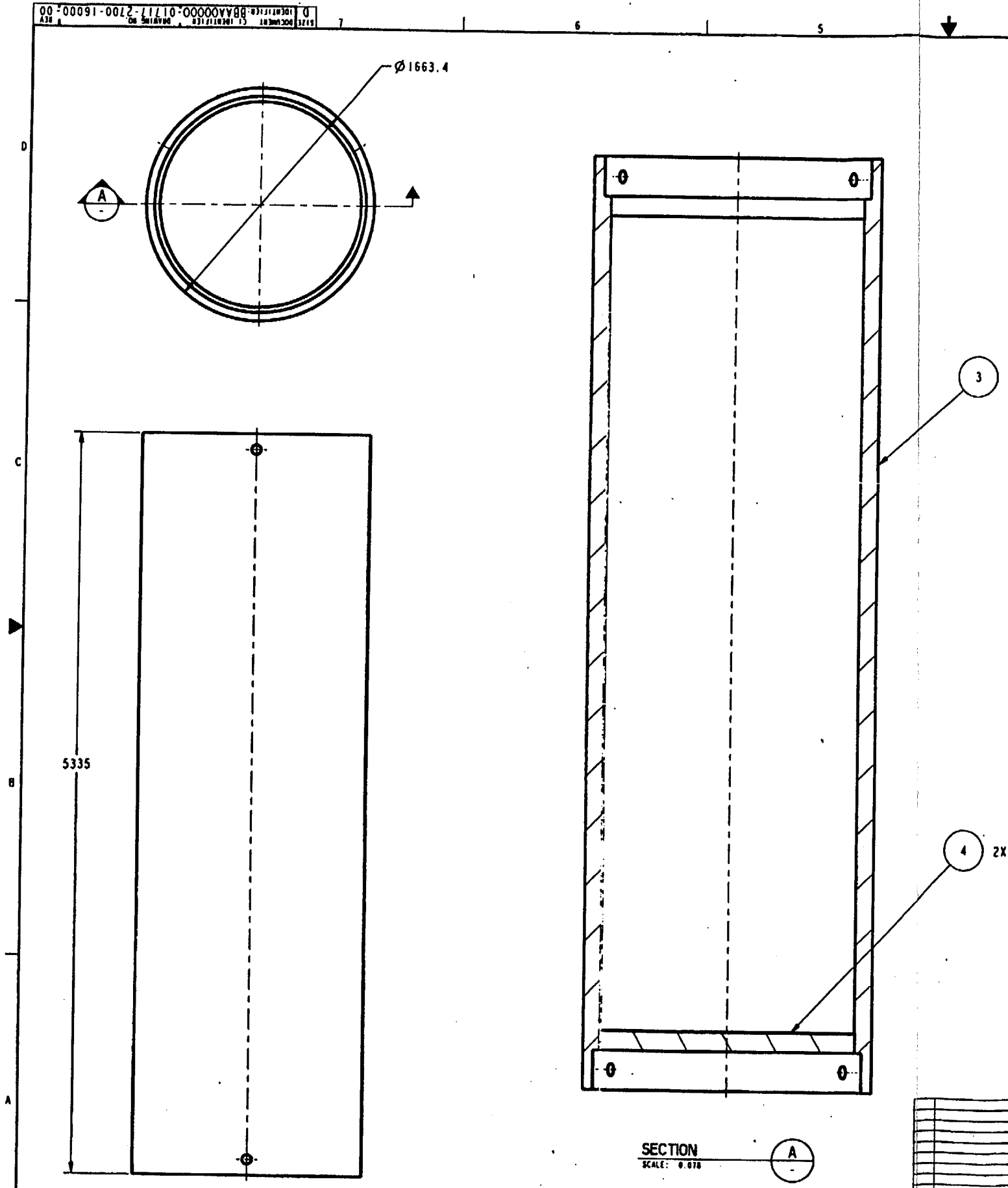

GENERAL NOTES:

1. THIS DRAWING IS BASED ON UNQUALIFIED DATA THAT DEPICTS PRELIMINARY DESIGN AND IS PRESENTED "FOR INFORMATION ONLY" THE INFORMATION IS NOT INTENDED FOR PROCUREMENT, FABRICATION , OR CONSTRUCTION.
2. FOR GENERAL NOTES & PARTS LIST SEE 21-PWR WASTE PACKAGE DISPOSAL CONTAINER DRAWING (ID: BBAA00000-01717-2700-15997 REV 00).

APERTURE CARD

Also Available on Aperture Card

DO NOT SCALE FROM THIS DRAWING

9903020206-05

REV	DESCRIPTION	DATE	DRN	ORG	CHK	VER	L.D.E.	Q.A.	D.M.
00	ISSUED APPROVED								

APPROVAL	INITIAL/DATE
DRAWN G. CONNELL	8-18-97
ORIGINATOR M. PLINSKI	
CHECKED S. BENNETT	
VERIFICATION N/A	
LEAD DESIGN ENGINEER T. DOERING	
QUALITY ASSURANCE	
DEPARTMENT MANAGER H. BERTON	

U.S. DEPARTMENT OF ENERGY
YUCCA MOUNTAIN SITE CHARACTERIZATION PROJECT
M&O CIVILIAN RADIOACTIVE WASTE MANAGEMENT SYSTEM
MANAGEMENT & OPERATING CONTRACTOR

21-PWR WASTE PACKAGE CORROSION ALLOWANCE BARRIER ASSEMBLY

SIZE D | DOCUMENT IDENTIFIER: CI IDENTIFIER BBAA00000 | DRAWING NO. 01717-2700-16000- | REV 00
SCALE 0.062 | D.A. CLASSIFICATION | W.B.S. 1.2.2 | CAD TYPE

RECORD DESIGNATOR QA:L

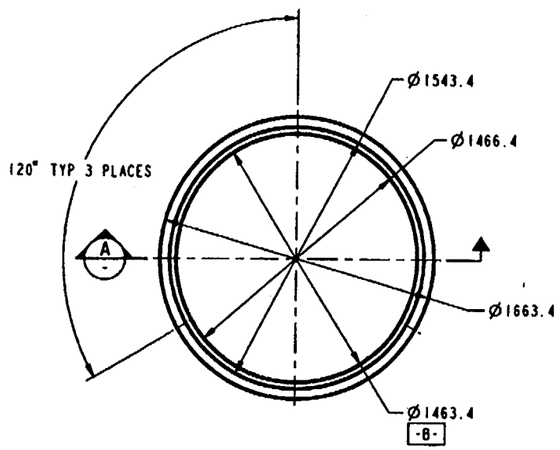

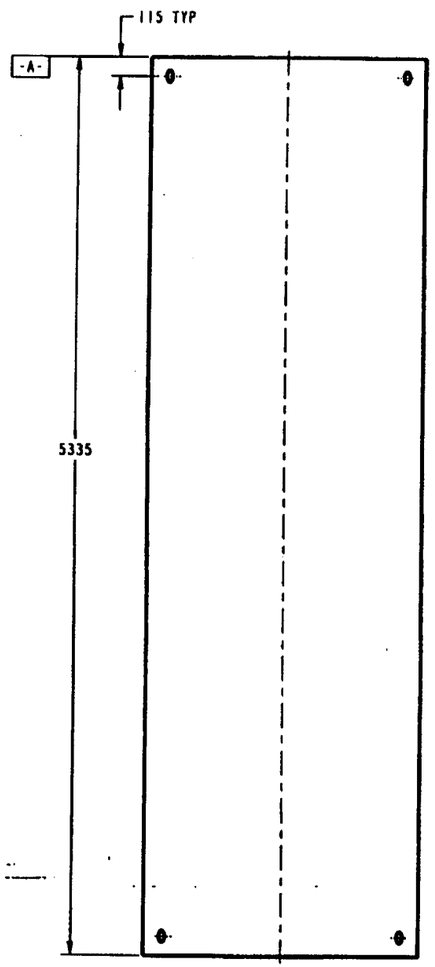

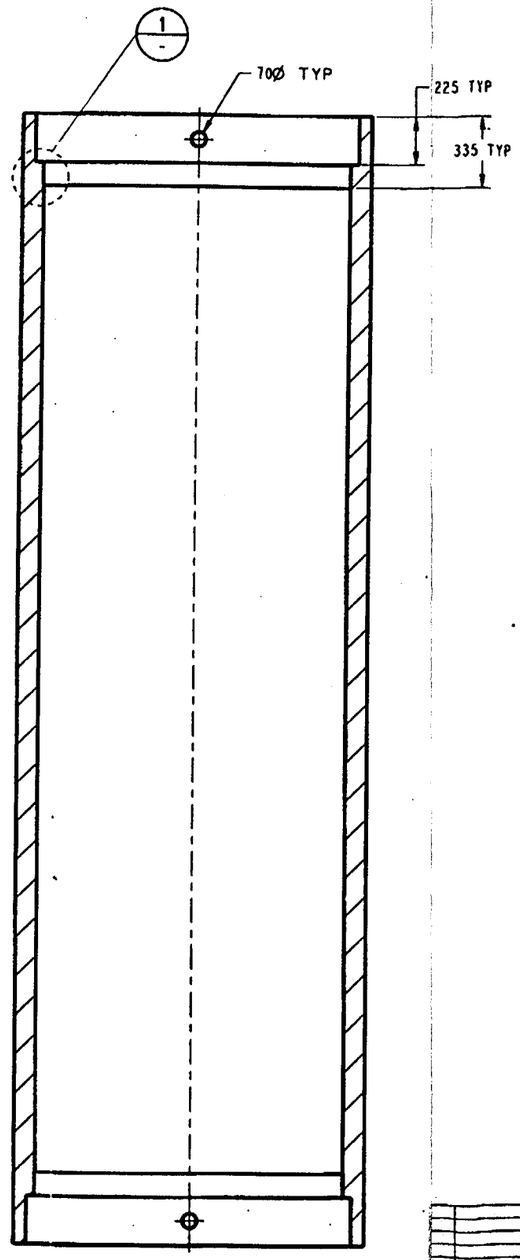

SECTION A
SCALE: 0.070

GENERAL NOTES:

1. THIS DRAWING IS BASED ON UNQUALIFIED DATA THAT DEPICTS PRELIMINARY DESIGN AND IS PRESENTED "FOR INFORMATION ONLY" THE INFORMATION IS NOT INTENDED FOR PROCUREMENT, FABRICATION , OR CONSTRUCTION.
2. FOR GENERAL NOTES & PARTS LIST SEE 21-PWR WASTE PACKAGE DISPOSAL CONTAINER DRAWING (DI: 88AA00000-01717-2700-15997 REV 00).

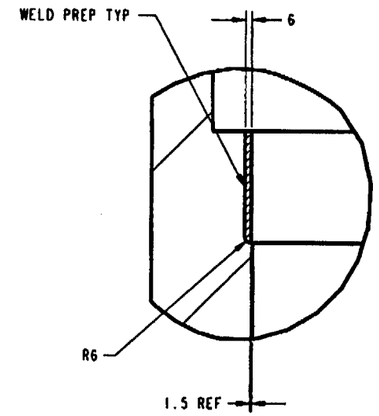

DETAIL 1
SCALE: 0.375

APERTURE CARD

Also Available on Aperture Card

DO NOT SCALE FROM THIS DRAWING

9903020206-06

REV	DESCRIPTION	DATE	DRN	DSG	CHK	VER	I.D.	Q.A.	D.N.
00	ISSUED APPROVED								

APPROVAL		INITIAL/DATE
DRAWN	G. CORNELL	
ORIGINATOR	M. PLINSKI	
CHECKED	S. BENNETT	
VERIFICATION	N/A	
LEAD DESIGN ENGINEER	T. DOERING	
QUALITY ASSURANCE		
DEPARTMENT MANAGER	H. BENTON	

U.S. DEPARTMENT OF ENERGY
YUCCA MOUNTAIN SITE CHARACTERIZATION PROJECT
CIVILIAN RADIOACTIVE WASTE MANAGEMENT SYSTEM
MANAGEMENT & OPERATING CONTRACTOR

21-PWR WASTE PACKAGE CORROSION ALLOWANCE SHELL

SIZE D | DOCUMENT IDENTIFIER: 88AA00000-01717-2700-16001- | C1 IDENTIFIER | DRAWING NO. | REV 00
SCALE 0.002 | D.A. CLASSIFICATION | W.B.S. | CAD FILE 1.2.2

RECORD DESIGNATOR QA:L

GENERAL NOTES:

1. THIS DRAWING IS BASED ON UNQUALIFIED DATA THAT DEPICTS PRELIMINARY DESIGN AND IS PRESENTED "FOR INFORMATION ONLY" THE INFORMATION IS NOT INTENDED FOR PROCUREMENT, FABRICATION , OR CONSTRUCTION.
2. FOR GENERAL NOTES & PARTS LIST SEE 21-PWR WASTE PACKAGE DISPOSAL CONTAINER DRAWING (D1: BBAA00000-01717-2700-15997 REV 00).

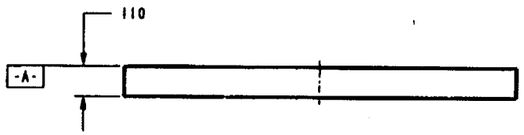

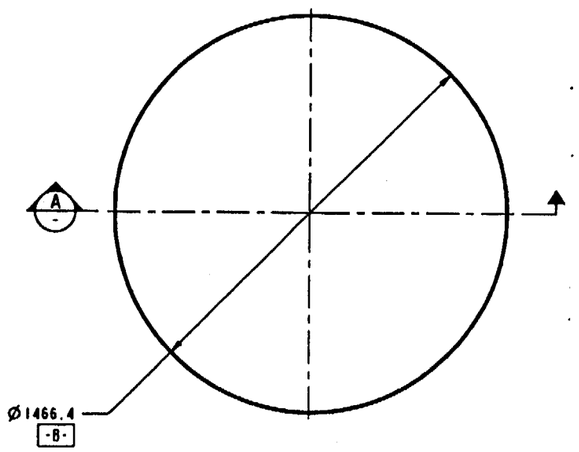

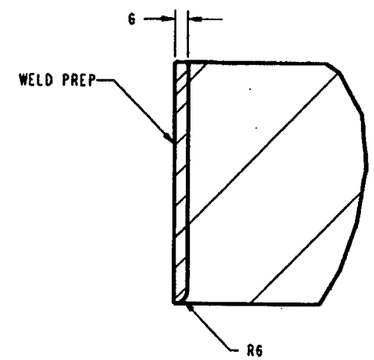

DETAIL 1
SCALE: 0.800

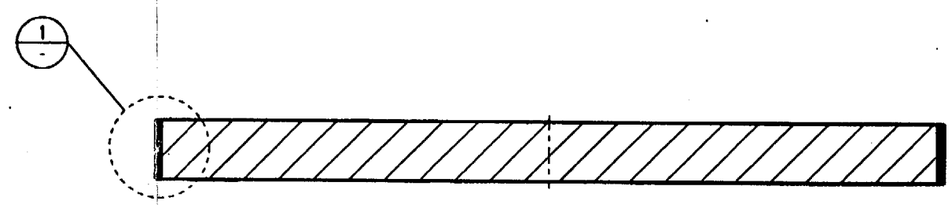

SECTION A
SCALE: 0.200

DO NOT SCALE FROM THIS DRAWING

9903020206-02

REV	DESCRIPTION	DATE	DRN	DRG	CHK	VER	D.E.	Q.A.	D.M.
00	ISSUED APPROVED								

APPROVAL	INITIAL/DATE
DRAWN G. CORNELL	
ORIGINATOR H. PLIOSKI	
CHECKED S. BENNETT	
VERIFICATION N/A	
LEAD DESIGN ENGINEER T. BOERING	
QUALITY ASSURANCE S. OGNA	
DEPARTMENT MANAGER H. BLOOM	

U.S. DEPARTMENT OF ENERGY
YUCCA MOUNTAIN SITE CHARACTERIZATION PROJECT
M&O CIVILIAN RADIOACTIVE WASTE MANAGEMENT SYSTEM
MANAGEMENT & OPERATING CONTRACTOR

21-PWR WASTE PACKAGE
CORROSION ALLOWANCE SHELL LID

SIZE D | DOCUMENT IDENTIFIER: C1 IDENTIFIER BBAA00000 | DRAWING NO 01717-2700-16002- | REV 00
SCALE 0.100 | Q.A. CLASSIFICATION 0 | W.B.S. CAD FILE 1.2.2

RECORD DESIGNATOR QA:L

APERTURE CARD
Also Available on Aperture Card

GENERAL NOTES:

1. THIS DRAWING IS BASED ON UNQUALIFIED DATA THAT DEPICTS PRELIMINARY DESIGN AND IS PRESENTED "FOR INFORMATION ONLY" THE INFORMATION IS NOT INTENDED FOR PROCUREMENT, FABRICATION , OR CONSTRUCTION.
2. FOR GENERAL NOTES & PARTS LIST SEE 21-PWR WASTE PACKAGE DISPOSAL CONTAINER DRAWING (D1: 88AA00000-01717-2700-15997 REV 00).

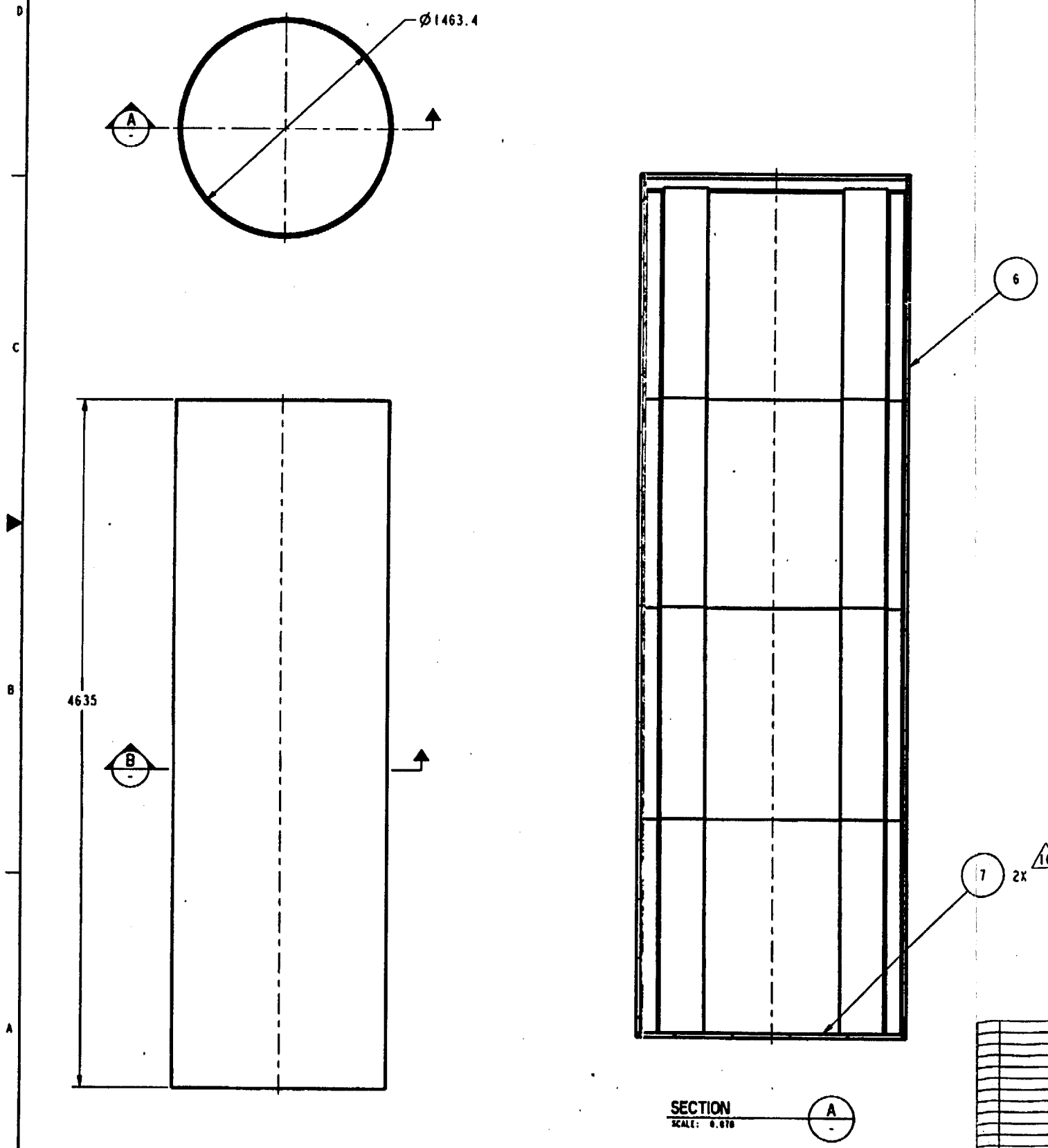

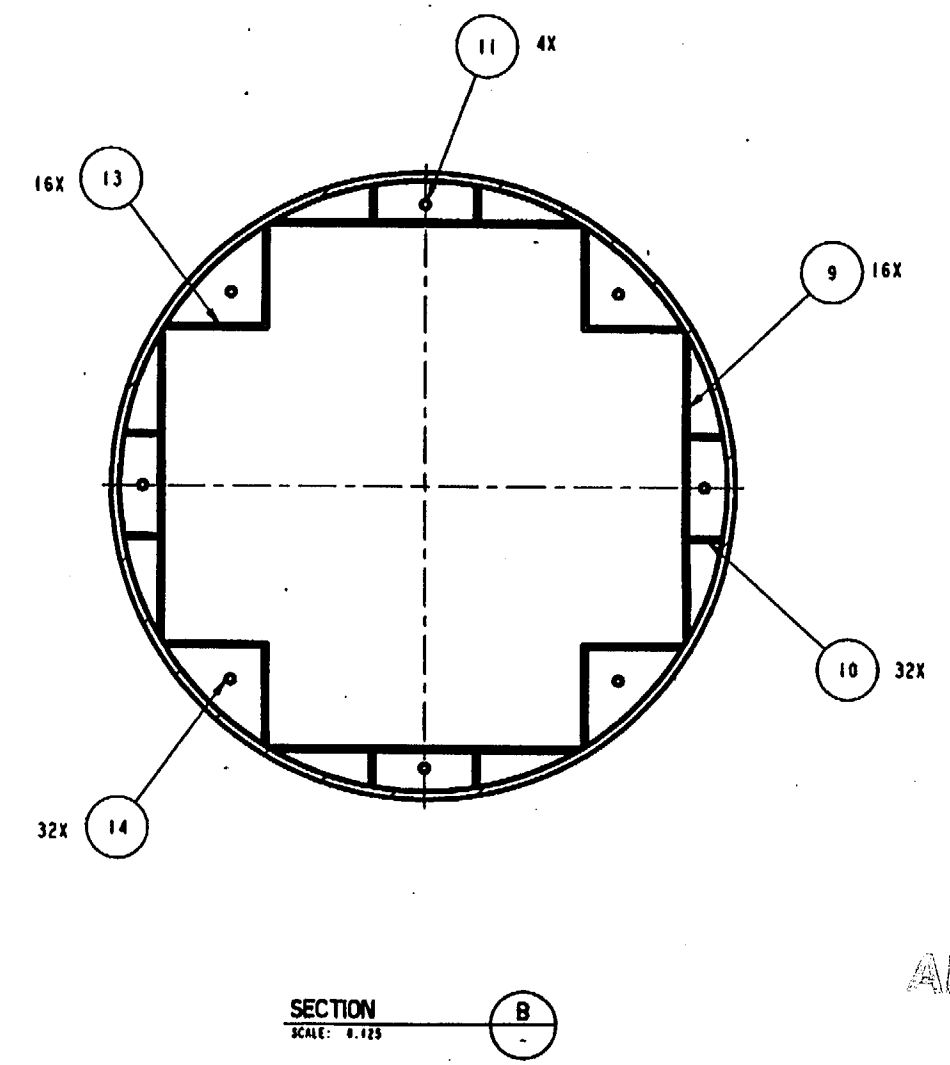

APERTURE CARD
Also Available on Aperture Card

DO NOT SCALE FROM THIS DRAWING

9903020206-08

REV	DESCRIPTION	DATE	DRN	DSG	CHK	VER	L.D.E.	Q.A.	D.N.
00	ISSUED APPROVED								

APPROVAL	INITIAL/DATE
DRAWN G. CONNELL	
ORIGINATOR M. PLUNDE	
CHECKED S. BENNETT	
VERIFICATION N/A	
LEAD DESIGN CHECKER T. DOERING	
QUALITY ASSURANCE	
DEPARTMENT MANAGER M. BERTON	

U.S. DEPARTMENT OF ENERGY
YUCCA MOUNTAIN SITE CHARACTERIZATION PROJECT
CIVILIAN RADIOACTIVE WASTE MANAGEMENT SYSTEM
MANAGEMENT & OPERATING CONTRACTOR

21-PWR WASTE PACKAGE CORROSION RESISTANT BARRIER ASSEMBLY

SIZE D | DOCUMENT IDENTIFIER: 88AA00000-01717-2700-16003- | CI IDENTIFIER | DRAWING NO. | REV 00
SCALE 0.062 | Q.A. CLASSIFICATION Q | W.B.S. 1.2.2 | CAD FILE

RECORD DESIGNATOR G

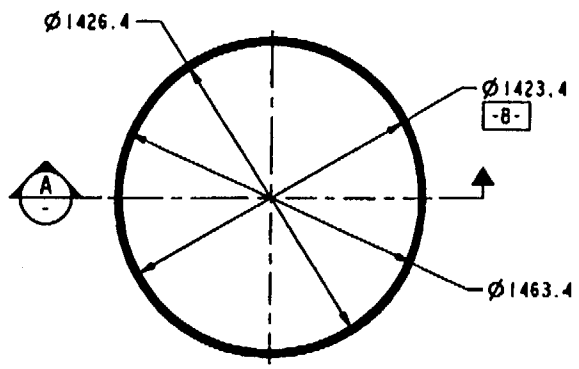

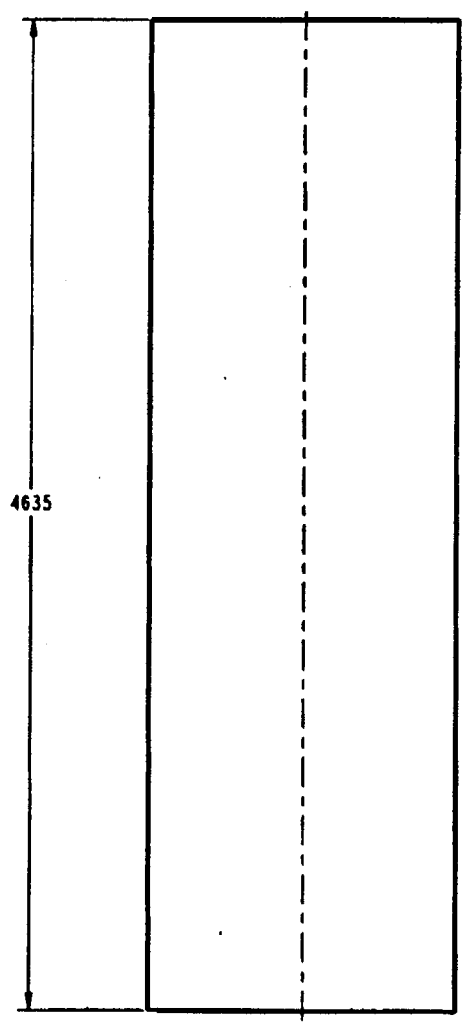

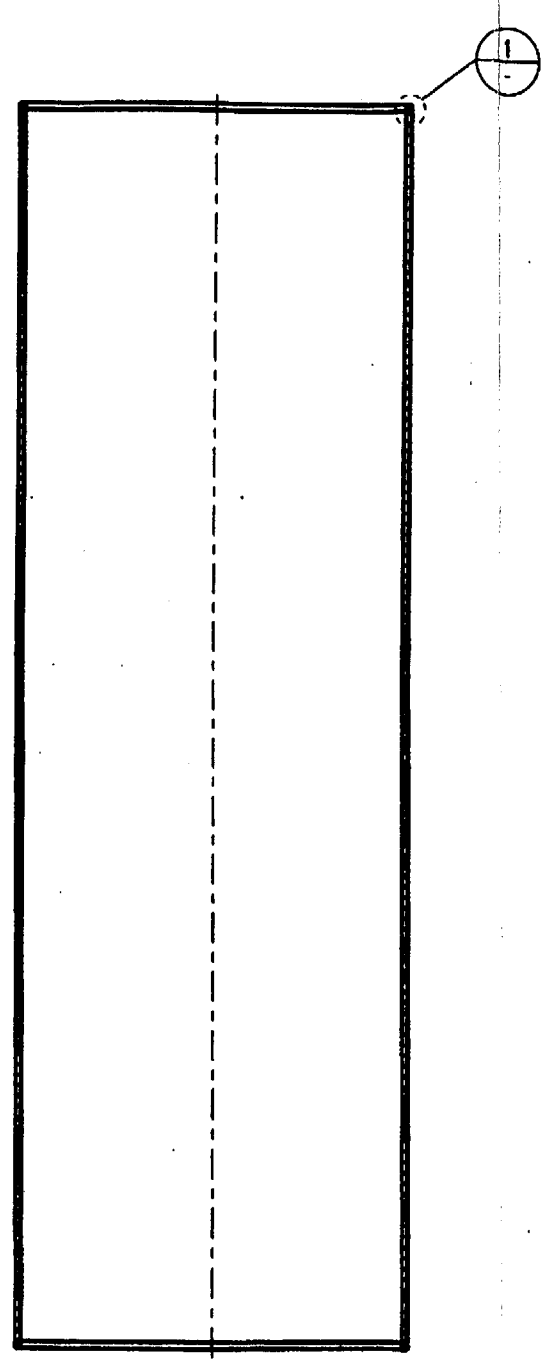

SECTION A
SCALE: 0.070

GENERAL NOTES:

1. THIS DRAWING IS BASED ON UNQUALIFIED DATA THAT DEPICTS PRELIMINARY DESIGN AND IS PRESENTED "FOR INFORMATION ONLY" THE INFORMATION IS NOT INTENDED FOR PROCUREMENT, FABRICATION , OR CONSTRUCTION.
2. FOR GENERAL NOTES & PARTS LIST SEE 21-PWR WASTE PACKAGE DISPOSAL CONTAINER DRAWING (DI: 88AA00000-01717-2700-15997 REV 00).

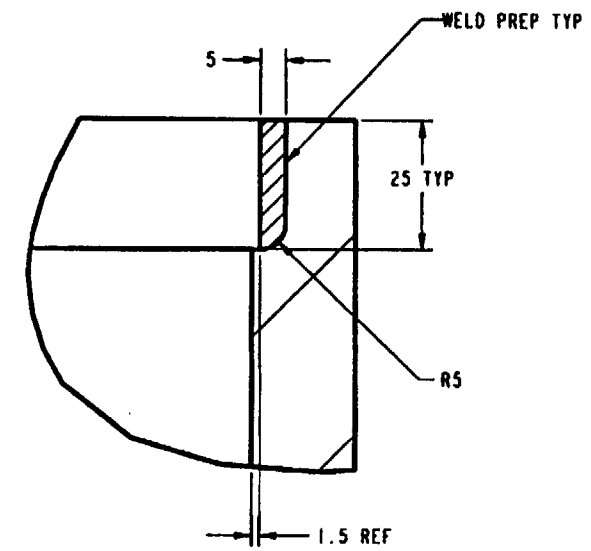

DETAIL 1
SCALE: 1.500

APERTURE CARD
Also Available on Aperture Card

DO NOT SCALE FROM THIS DRAWING

9903020206-09

REV	DESCRIPTION	DATE	DRN	CHG	CHK	VER	L.D.E.	Q.A.	D.H.
00	ISSUED APPROVED					N/A			

APPROVAL	INITIAL/DATE
DRAWN G. CONNELL	8-30-97
ORIGINATOR H. PLUESSEL	8/28/97
CHECKED S. BENNETT	8/28/97
VERIFICATION N/A	
LEAD DESIGN ENGINEER T. DOERING	
QUALITY ASSURANCE S. DONA	
DEPARTMENT MANAGER H. BERICH	

U.S. DEPARTMENT OF ENERGY
YUCCA MOUNTAIN SITE CHARACTERIZATION PROJECT
CIVILIAN RADIOACTIVE WASTE MANAGEMENT SYSTEM
MANAGEMENT & OPERATING CONTRACTOR

21-PWR WASTE PACKAGE CORROSION RESISTANT SHELL

SIZE	DOCUMENT IDENTIFIER: CI IDENTIFIER / DRAWING NO.	REV
D	88AA00000-01717-2700-16004-	00
SCALE 0.062	Q.A. CLASSIFICATION Q	W.B.S. 1.2.2 / CAD FILE

RECORD DESIGNATOR QA:L

GENERAL NOTES:

1. THIS DRAWING IS BASED ON UNQUALIFIED DATA THAT DEPICTS PRELIMINARY DESIGN AND IS PRESENTED "FOR INFORMATION ONLY" THE INFORMATION IS NOT INTENDED FOR PROCUREMENT, FABRICATION , OR CONSTRUCTION.
2. FOR GENERAL NOTES & PARTS LIST SEE 21-PWR WASTE PACKAGE DISPOSAL CONTAINER DRAWING (D1: BBAA00000-01717-2700-15897 REV 00).

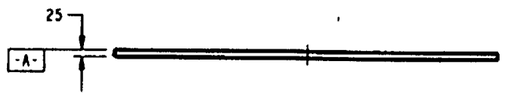

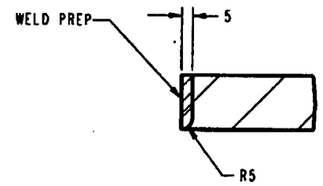

DETAIL 1 / -
SCALE: 0.600

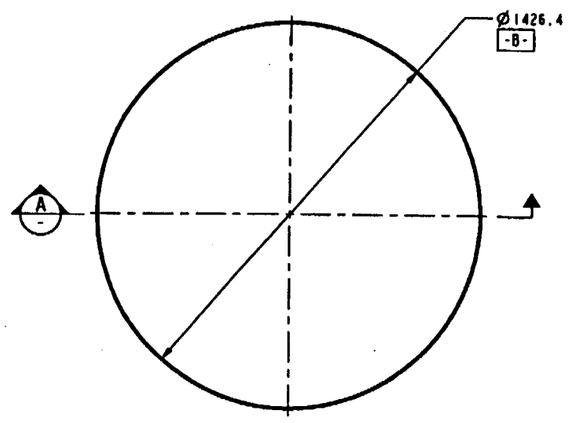

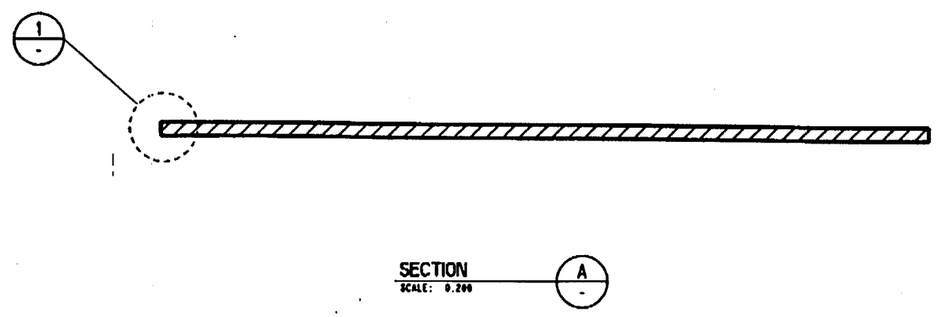

SECTION A / -
SCALE: 0.200

DO NOT SCALE FROM THIS DRAWING

9903020206-10

REV	DESCRIPTION	DATE	DRN	ORG	CHK	VER	L.D.E	Q.A.	D.H.
00	ISSUED APPROVED								

APPROVAL		INITIAL/DATE
DRAWN	G. CORNELL	8-18-97
CONTRIBUTOR	R. PLUNSKI	8/28/97
CHECKED	S. BENNETT	8/28/97
VERIFICATION	N/A	
LEAD DESIGN ENGINEER	T. DOERING	8-28-97
QUALITY ASSURANCE	S. OZAKI	8/29/97
DEPARTMENT MANAGER	H. DESTON	8/29/97

U.S. DEPARTMENT OF ENERGY
YUCCA MOUNTAIN SITE CHARACTERIZATION PROJECT
CIVILIAN RADIOACTIVE WASTE MANAGEMENT SYSTEM
M&O MANAGEMENT & OPERATING CONTRACTOR

21-PWR WASTE PACKAGE
CORROSION RESISTANT SHELL LID

SIZE	DOCUMENT IDENTIFIER:	CI IDENTIFIER	DRAWING NO.	REV
D		BBAA00000-	01717-2700-16005-	00

SCALE	Q.A. CLASSIFICATION	W.B.S.	CAD FILE
0.100	Q	1.2.2	

RECORD DESIGNATOR QA:L

APERTURE CARD
Also Available on Aperture Card

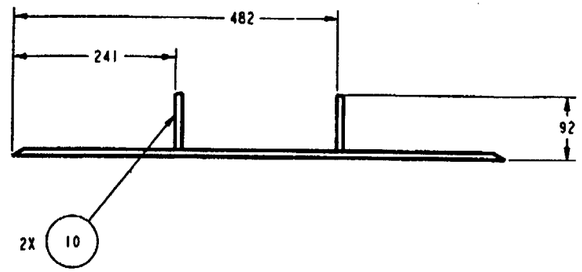

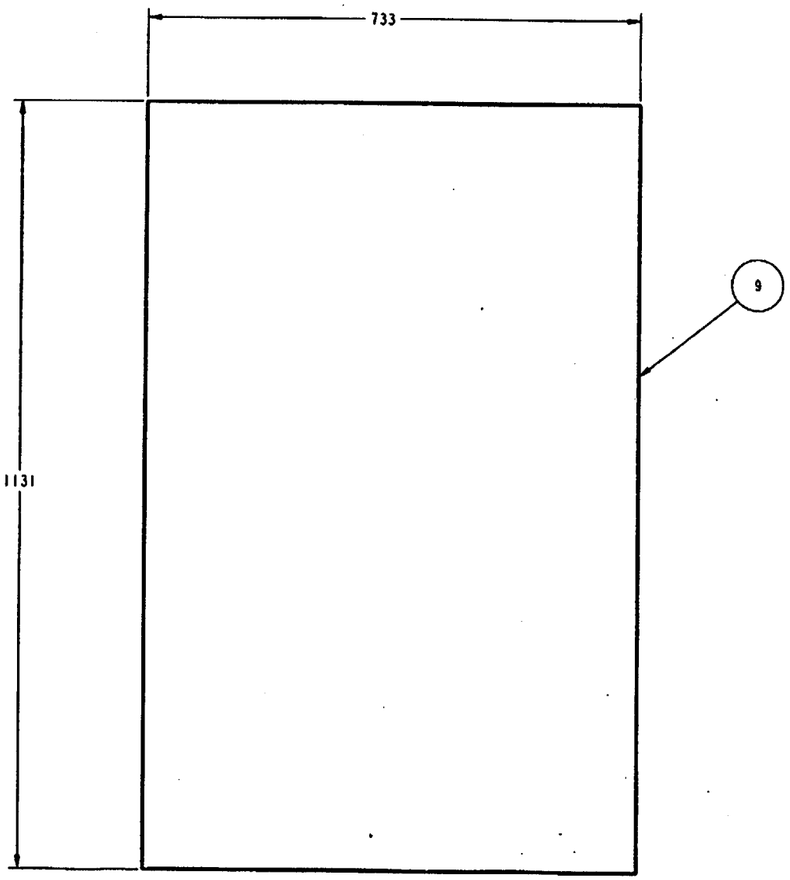

GENERAL NOTES:

1. THIS DRAWING IS BASED ON UNQUALIFIED DATA THAT DEPICTS PRELIMINARY DESIGN AND IS PRESENTED "FOR INFORMATION ONLY" THE INFORMATION IS NOT INTENDED FOR PROCUREMENT, FABRICATION , OR CONSTRUCTION.
2. FOR GENERAL NOTES & PARTS LIST SEE 21-PWR WASTE PACKAGE DISPOSAL CONTAINER DRAWING (D1: BBAA00000-01717-2700-15997 REV 00).

DO NOT SCALE FROM THIS DRAWING

9903020206

REV	ISSUED/APPROVED	DESCRIPTION	DATE	DRN	CHK	VER	L.D.E.	Q.A.	D.M.
00									

APPROVAL	INITIAL/DATE
DRAWN G. CORNELL	8-20-97
ORIGINATOR M. PLUMSEE	8/20/97
CHECKED S. BENNETT	8/20/97
VERIFICATION N/A	
LEAD DESIGN ENGINEER T. BOEDING	8/20/97
QUALITY ASSURANCE J. DAVIS	8/20/97
DEPARTMENT MANAGER M. BERTOCCI	8/20/97

U.S. DEPARTMENT OF ENERGY
YUCCA MOUNTAIN SITE CHARACTERIZATION PROJECT
M&O CIVILIAN RADIOACTIVE WASTE MANAGEMENT SYSTEM
MANAGEMENT & OPERATING CONTRACTOR

21-PWR WASTE PACKAGE BASKET SIDE GUIDE ASSEMBLY

SIZE	DOCUMENT IDENTIFIER: CI IDENTIFIER / DRAWING NO	REV
D	BBAA00000-01717-2700-16006-	00

SCALE 0.250 | U.S. CLASSIFICATION U | W.B.S. CAD FILE 1.2.7

RECORD DESIGNATOR QA:L

APERTURE CARD

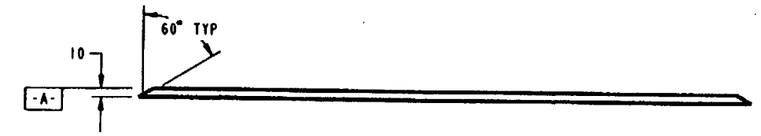

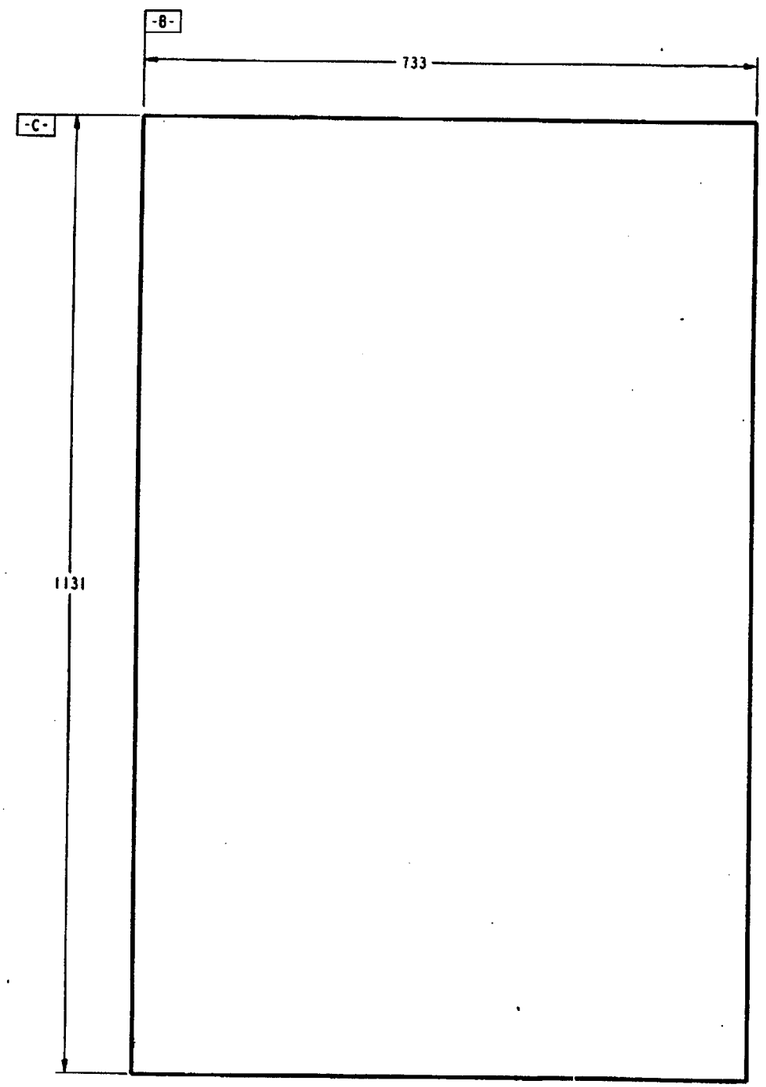

GENERAL NOTES:

1. THIS DRAWING IS BASED ON UNQUALIFIED DATA THAT DEPICTS PRELIMINARY DESIGN AND IS PRESENTED "FOR INFORMATION ONLY" THE INFORMATION IS NOT INTENDED FOR PROCUREMENT, FABRICATION , OR CONSTRUCTION.
2. FOR GENERAL NOTES & PARTS LIST SEE 21-PWR WASTE PACKAGE DISPOSAL CONTAINER DRAWING (D1: BBAA00000-01717-2700-15997 REV 00).

APPROVED FOR CAD

Also Available on Aperture Card

DO NOT SCALE FROM THIS DRAWING

9903020206 -12

REV	ISSUED/APPROVED	DESCRIPTION	DATE	DRN	CHK	VER	L.D.E.	Q.A.	D.M.
00									

APPROVAL		INITIAL/DATE
DRAWN	G. CONNELL	8-18-97
CHECKED	S. BENNETT	8/26/97
VERIFICATION	N/A	
LEAD DESIGN ENGINEER	T. BOERING	8-20-97
QUALITY ASSURANCE		8/29/97
DEPARTMENT MANAGER	H. BENTON	8/29/97

U.S. DEPARTMENT OF ENERGY
YUCCA MOUNTAIN SITE CHARACTERIZATION PROJECT
M&O CIVILIAN RADIOACTIVE WASTE MANAGEMENT SYSTEM
MANAGEMENT & OPERATING CONTRACTOR

21-PWR WASTE PACKAGE
BASKET A-GUIDE

SIZE	DOCUMENT IDENTIFIER: CI IDENTIFIER BBAA00000	DRAWING NO. 01717-2700-16007-	REV 00
0			
SCALE 0.312	U.A. CLASSIFICATION 0	U.S.S. CAD FILE 1,2,3	

RECORD DESIGNATOR

MOL.19971222.0126

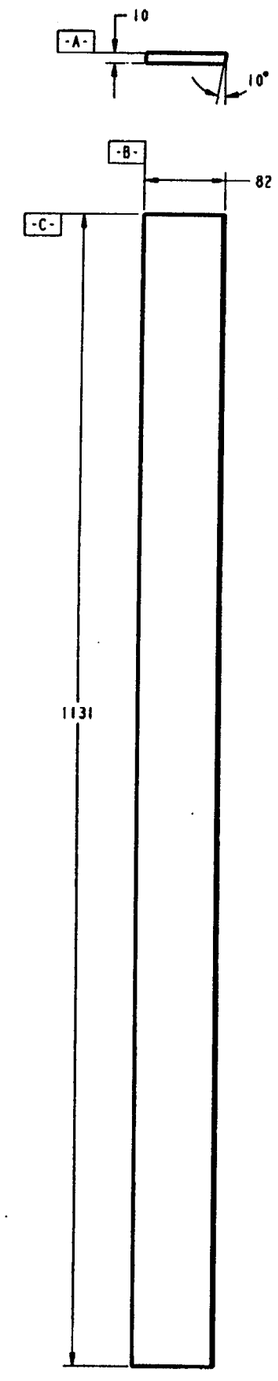

GENERAL NOTES:

1. THIS DRAWING IS BASED ON UNQUALIFIED DATA THAT DEPICTS PRELIMINARY DESIGN AND IS PRESENTED "FOR INFORMATION ONLY" THE INFORMATION IS NOT INTENDED FOR PROCUREMENT, FABRICATION , OR CONSTRUCTION.
2. FOR GENERAL NOTES & PARTS LIST SEE 21-PWR WASTE PACKAGE DISPOSAL CONTAINER DRAWING (ID: BBAA00000-01717-2700-15997 REV 00).

DO NOT SCALE FROM THIS DRAWING

9903020206-13

REV	DESCRIPTION	DATE	DRN	ORG	CHK	R/A VER	L.D.E.	Q.A.	D.N.
00	ISSUED APPROVED								

APPROVAL	INITIAL/DATE
DRAWN S. CONNELL	9-18-97
CHECKED S. DEMMITT	9/18/97
VERIFICATION R/A	
LEAD DESIGN ENGINEER T. DOERING	9-22-97
QUALITY ASSURANCE S. Davis	9-22-97
DEPARTMENT MANAGER R. BENTON	9/22/97

U.S. DEPARTMENT OF ENERGY
YUCCA MOUNTAIN SITE CHARACTERIZATION PROJECT
M&O CIVILIAN RADIOACTIVE WASTE MANAGEMENT SYSTEM
MANAGEMENT & OPERATING CONTRACTOR

21-PWR WASTE PACKAGE
BASKET B-GUIDE

SIZE B | DOCUMENT IDENTIFIER: BBAA00000-01717-2700-16008- | REV 00
SCALE 0.375 | D.A. CLASSIFICATION 0 | W.B.S. 1.2.2 | CAD FILE

RECORD DESIGNATOR QA:L

APERTURE CARD

Also Available on Aperture Card

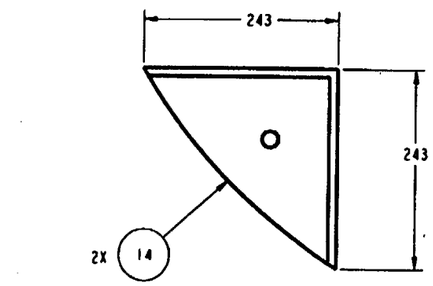

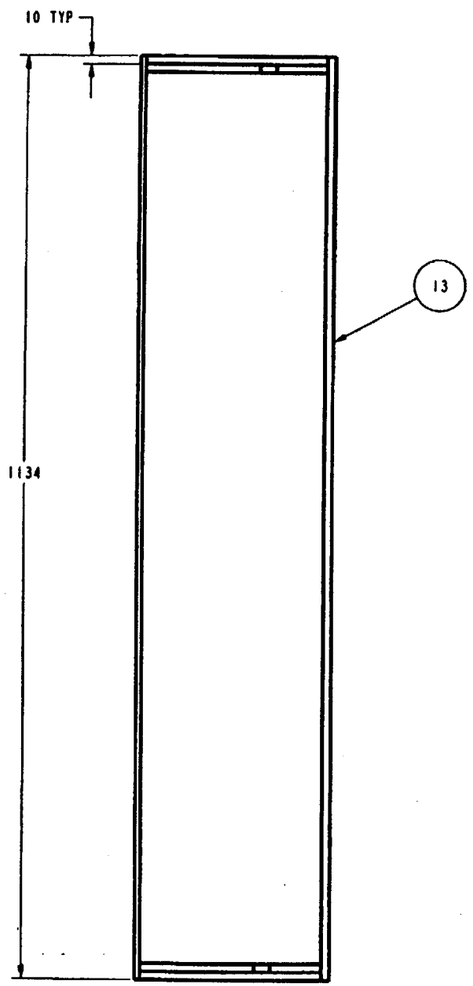

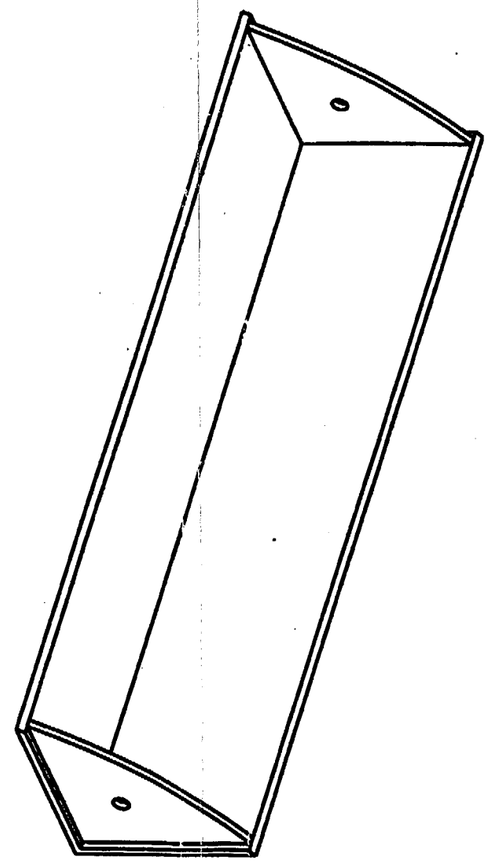

GENERAL NOTES:

1. THIS DRAWING IS BASED ON UNQUALIFIED DATA THAT DEPICTS PRELIMINARY DESIGN AND IS PRESENTED "FOR INFORMATION ONLY" THE INFORMATION IS NOT INTENDED FOR PROCUREMENT, FABRICATION , OR CONSTRUCTION.
2. FOR GENERAL NOTES & PARTS LIST SEE 21-PWR WASTE PACKAGE DISPOSAL CONTAINER DRAWING (DI: BBAA00000-01717-2700-15997 REV 00).

DO NOT SCALE FROM THIS DRAWING

9903020206 -14

REV	DESCRIPTION	DATE	DRN	DSG	CHK	VER	D.E.	Q.A.	D.H.
00	ISSUED APPROVED								

APPROVAL	INITIAL/DATE
DRAWN G. CORNELL	8-28-97
ORIGINATOR H. PLUSSER	8/28/97
CHECKED S. BENNETT	8/28/97
VERIFICATION N/A	
LEAD DESIGN ENGINEER T. DOERING	
QUALITY ASSURANCE S. DANA	
DEPARTMENT MANAGER H. BENTON	

U.S. DEPARTMENT OF ENERGY
YUCCA MOUNTAIN SITE CHARACTERIZATION PROJECT
CIVILIAN RADIOACTIVE WASTE MANAGEMENT SYSTEM
M&O MANAGEMENT & OPERATING CONTRACTOR

21-PWR WASTE PACKAGE
BASKET CORNER GUIDE ASSEMBLY

SIZE	DOCUMENT IDENTIFIER	CI IDENTIFIER	DRAWING NO.	REV
D	BBAA00000-	01717-2700-	16009-	00
SCALE 0.300	D.A. CLASSIFICATION 0		N.R.S. CAD FILE 1.2.2	

APERTURE CARD

Also Available on Aperture Card

RECORD DESIGNATOR 04-1

14

MOL.19980107.0221

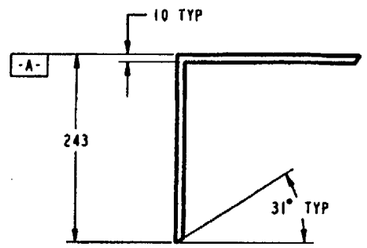

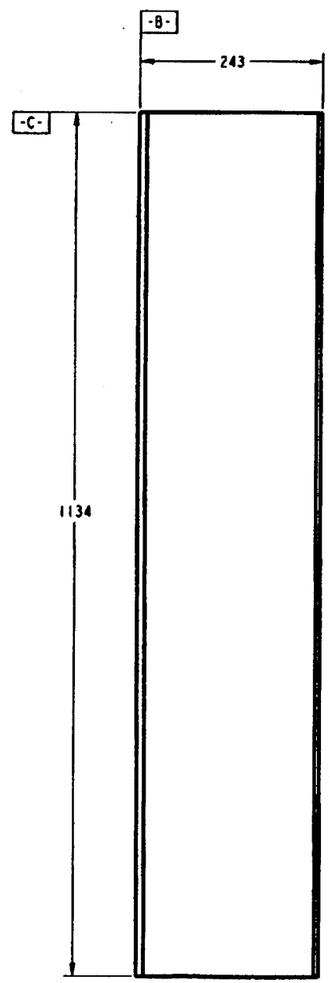

GENERAL NOTES:

1. THIS DRAWING IS BASED ON UNQUALIFIED DATA THAT DEPICTS PRELIMINARY DESIGN AND IS PRESENTED "FOR INFORMATION ONLY" THE INFORMATION IS NOT INTENDED FOR PROCUREMENT, FABRICATION , OR CONSTRUCTION.
2. FOR GENERAL NOTES & PARTS LIST SEE 21-PWR WASTE PACKAGE DISPOSAL CONTAINER DRAWING (ID#: 88AA00000-01717-2700-15997 REV 00).

APERTURE CARD
Also Available on Aperture Card

9903020206-15

DO NOT SCALE FROM THIS DRAWING

REV	DESCRIPTION	DATE	DRN	ORG	CHK	VER	D.E.	Q.A.	D.M.
00	ISSUED APPROVED								

APPROVAL		INITIAL/DATE
DRAWN	G. CORNELL	4-30-97
ORIGINATOR	M. PLIOSKI	4/30/97
CHECKED	S. DEWITT	4/30/97
VERIFICATION	N/A	
LEAD DESIGN ENGINEER	T. DOCKING	5/2/97
QUALITY ASSURANCE	S. DAHA	5/2/97
DEPARTMENT MANAGER	H. BENTON	5/2/97

U.S. DEPARTMENT OF ENERGY
YUCCA MOUNTAIN SITE CHARACTERIZATION PROJECT
CIVILIAN RADIOACTIVE WASTE MANAGEMENT SYSTEM
M&O MANAGEMENT & OPERATING CONTRACTOR

21-PWR WASTE PACKAGE BASKET CORNER GUIDE

SIZE	DOCUMENT IDENTIFIER	CI IDENTIFIER	DRAWING NO.	REV
D		BBAA00000-	01717-2700-16010-	00

SCALE	Q.A. CLASSIFICATION	U.S.C.	CAD FILE
0.281	Q	1,2,3	

RECORD DESIGNATOR QA:L

15

GENERAL NOTES:

1. THIS DRAWING IS BASED ON UNQUALIFIED DATA THAT DEPICTS PRELIMINARY DESIGN AND IS PRESENTED "FOR INFORMATION ONLY" THE INFORMATION IS NOT INTENDED FOR PROCUREMENT, FABRICATION , OR CONSTRUCTION.
2. FOR GENERAL NOTES & PARTS LIST SEE 21-PWR WASTE PACKAGE DISPOSAL CONTAINER DRAWING (D1: 88AA00000-01717-2700-15897 REV 00).

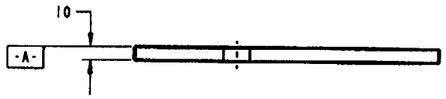

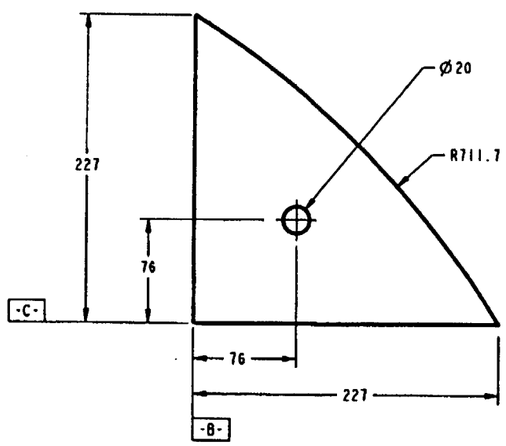

DO NOT SCALE FROM THIS DRAWING

9903020206-16

REV	DESCRIPTION	DATE	DRN	DES	CHK	VER	L.E	Q.A	D.M
00	ISSUED APPROVED								

APPROVAL		INITIAL/DATE
DRAWN	G. CORNELL	8-20-97
CONTRIBUTOR	M. PLUNSAK	
CHECKED	S. BENNETT	
VERIFICATION	N/A	
LEAD DESIGN ENGINEER	T. DOERING	
QUALITY ASSURANCE	S. DANA	
DEPARTMENT MANAGER	M. BEATON	

U.S. DEPARTMENT OF ENERGY
YUCCA MOUNTAIN SITE CHARACTERIZATION PROJECT
CIVILIAN RADIOACTIVE WASTE MANAGEMENT SYSTEM
MANAGEMENT & OPERATING CONTRACTOR

21-PWR WASTE PACKAGE
BASKET STIFFENER

SIZE D | DOCUMENT IDENTIFIER: C1 IDENTIFIER 88AA00000 | DRAWING NO. 01717-2700-16011- | REV 00
SCALE 0.500 | Q.A. CLASSIFICATION 0 | U.S.S. CAD FILE 1.2.2

RECORD DESIGNATOR QA-1

APERTURE CARD

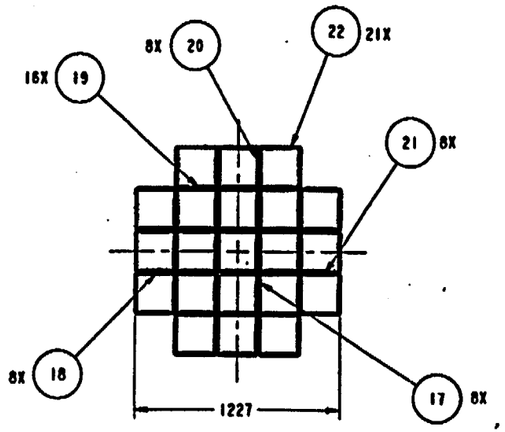

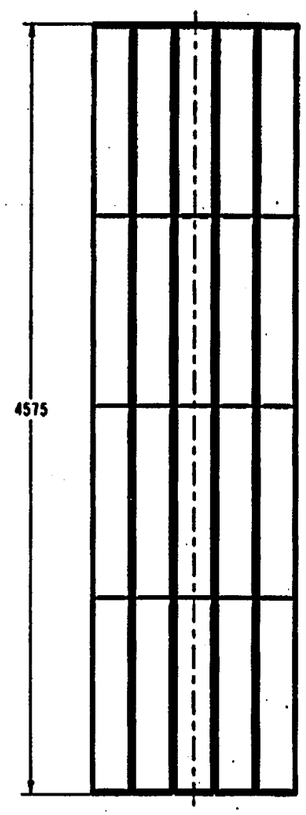

GENERAL NOTES:

1. THIS DRAWING IS BASED ON UNQUALIFIED DATA THAT DEPICTS PRELIMINARY DESIGN AND IS PRESENTED "FOR INFORMATION ONLY" THE INFORMATION IS NOT INTENDED FOR PROCUREMENT, FABRICATION , OR CONSTRUCTION.
2. FOR GENERAL NOTES & PARTS LIST SEE 21-PWR WASTE PACKAGE DISPOSAL CONTAINER DRAWING (ID#: BBAA00000-01717-2700-15997 REV 00).

APERTURE CARD
Also Available on Aperture Card

DO NOT SCALE FROM THIS DRAWING

9903020206 -17

REV	ISSUED APPROVED	DESCRIPTION	DATE	DRN	ORG	CHK	VER	L.D.E.	Q.A.	D.N.
00										

APPROVAL	INITIAL/DATE
DRAWN G. COWELL	8-18-97
ORIGINATOR H. PLIMSOL	
CHECKED G. DEWHITT	
VERIFICATION N/A	
LEAD DESIGN ENGINEER T. DOERING	8-22-97
QUALITY ASSURANCE	
DEPARTMENT MANAGER H. BENTON	

U.S. DEPARTMENT OF ENERGY
YUCCA MOUNTAIN SITE CHARACTERIZATION PROJECT
CIVILIAN RADIOACTIVE WASTE MANAGEMENT SYSTEM
MANAGEMENT & OPERATING CONTRACTOR

21-PWR WASTE PACKAGE FUEL BASKET ASSEMBLY

SIZE 0 | DOCUMENT IDENTIFIER: CI IDENTIFIER BBAA00000 | DRAWING NO. 01717-2700-16012- | REV 00
SCALE 0.002 | D.N. CLASSIFICATION 0 | W.B.S. | J.O. | FILE

RECORD DESIGNATOR QA:L

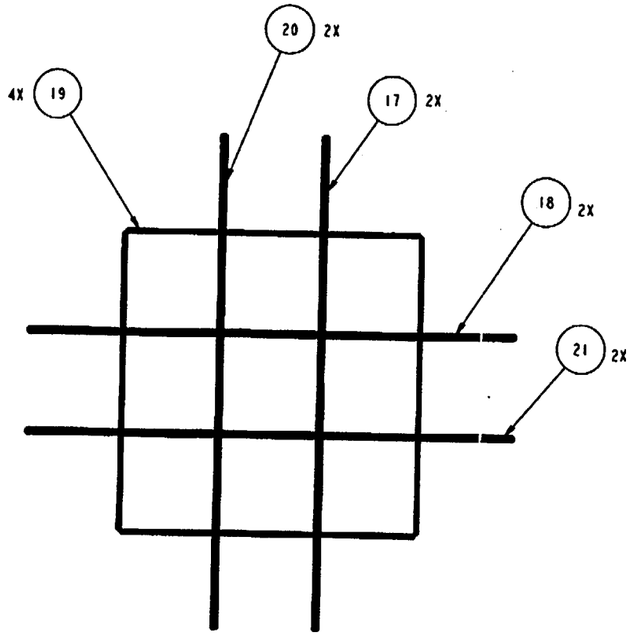

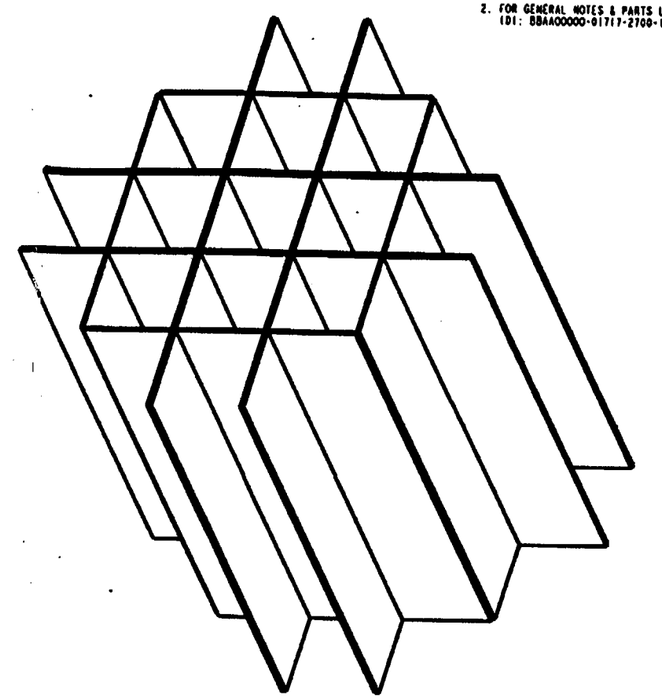

GENERAL NOTES:

1. THIS DRAWING IS BASED ON UNQUALIFIED DATA THAT DEPICTS PRELIMINARY DESIGN AND IS PRESENTED "FOR INFORMATION ONLY" THE INFORMATION IS NOT INTENDED FOR PROCUREMENT, FABRICATION , OR CONSTRUCTION.
2. FOR GENERAL NOTES & PARTS LIST SEE 21-PWR WASTE PACKAGE DISPOSAL CONTAINER DRAWING (DI: BBAA00000-01717-2700-15997 REV 001).

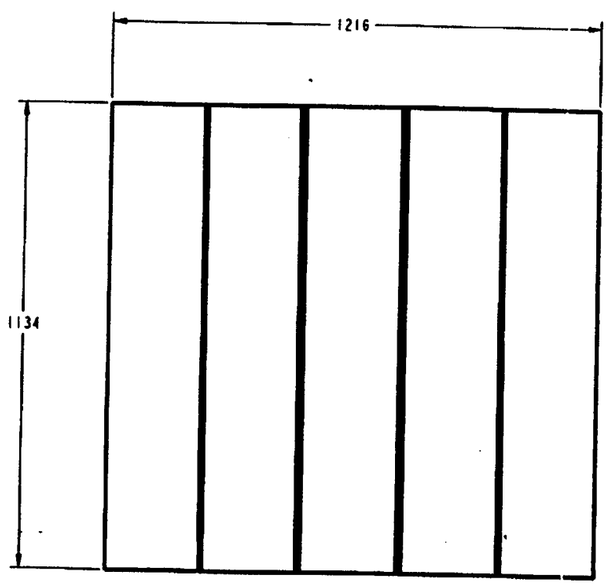

DO NOT SCALE FROM THIS DRAWING

9903020206 -18

REV	DESCRIPTION	DATE	DWN	CHK	CHK	VER	L.D.E.	Q.A.	D.M.
00	ISSUED APPROVED								

APPROVAL	INITIAL/DATE
DRAWN G. CORNELL	
CHECKER W. PLINSKI	
CHECKED S. BENNETT	
VERIFICATION N/A	
LEAD DESIGN ENGINEER T. BOERING	
QUALITY ASSURANCE	
DEPARTMENT MANAGER H. BENTON	

U.S. DEPARTMENT OF ENERGY
YUCCA MOUNTAIN SITE CHARACTERIZATION PROJECT
M&O CIVILIAN RADIOACTIVE WASTE MANAGEMENT SYSTEM
MANAGEMENT & OPERATING CONTRACTOR

21-PWR WASTE PACKAGE
FUEL BASKET PLATE ASSEMBLY

SIZE D | DOCUMENT IDENTIFIER: CI IDENTIFIER BBAA00000 | DRAWING NO. 01717-2700-16013- | REV 00
SCALE 0.150 | D.A. CLASSIFICATION 0 | W.B.S. 1.2.2 | CAD FILE

RECORD DESIGNATOR QA:L

APERTURE CARD
Also Available on Aperture Card

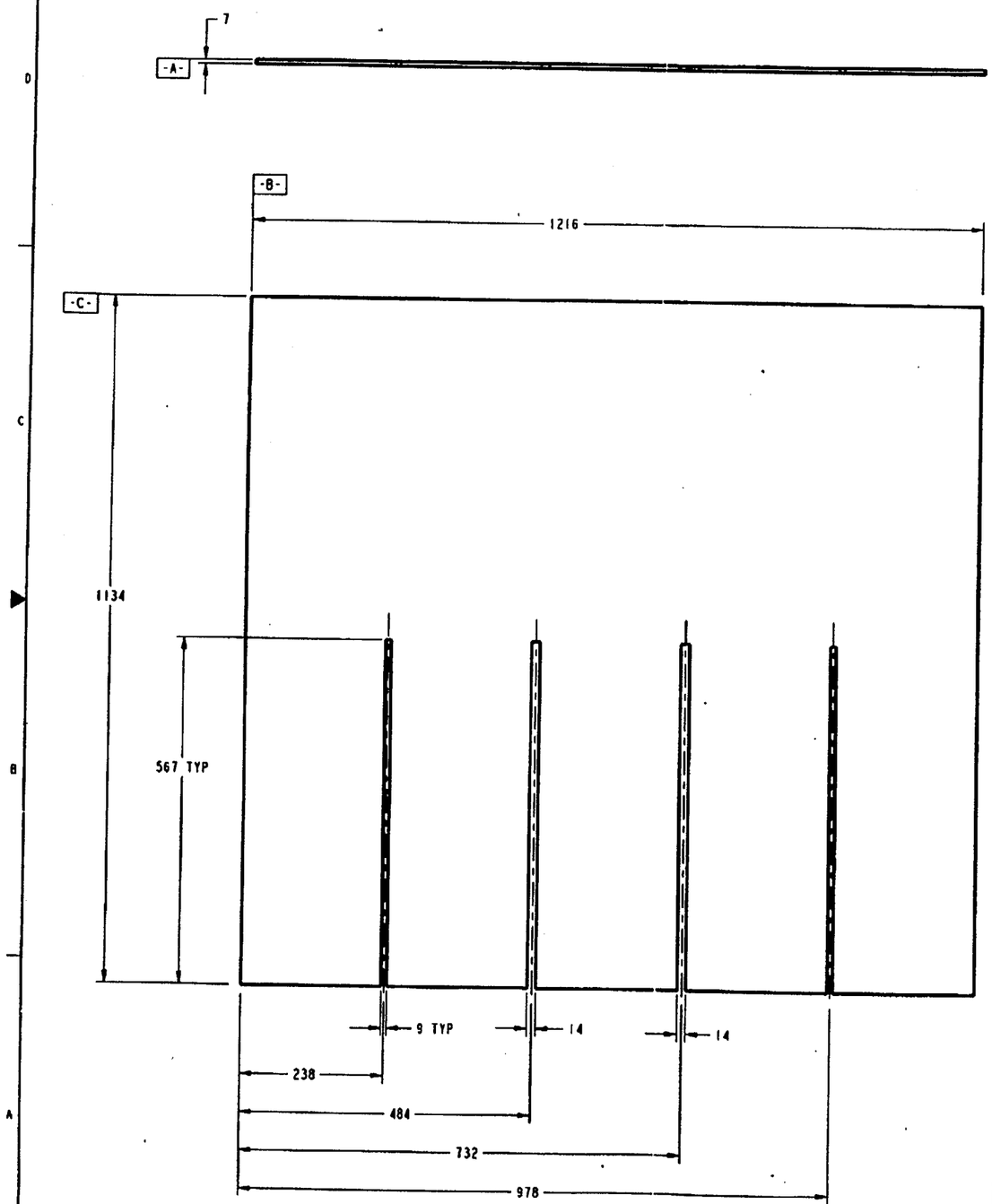

GENERAL NOTES:

1. THIS DRAWING IS BASED ON UNQUALIFIED DATA THAT DEPICTS PRELIMINARY DESIGN AND IS PRESENTED "FOR INFORMATION ONLY" THE INFORMATION IS NOT INTENDED FOR PROCUREMENT, FABRICATION , OR CONSTRUCTION.
2. FOR GENERAL NOTES & PARTS LIST SEE 21-PWR WASTE PACKAGE DISPOSAL CONTAINER DRAWING (ID: BBAA00000-01717-2700-15997 REV 00).

DO NOT SCALE FROM THIS DRAWING

9903020206-19

REV	DESCRIPTION	DATE	DRN	CHK	VER	L.D.E.	Q.A.	D.H.
00	ISSUED APPROVED							

APPROVAL		INITIAL/DATE
DRAWN	G. CONNELL	5-28-97
ORIGINATOR	H. PLIBSEI	5/28/97
CHECKED	S. BENNETT	5/28/97
VERIFICATION	N/A	
LEAD DESIGN ENGINEER	T. DOERING	
QUALITY ASSURANCE	B. DANA	5/29/97
DEPARTMENT MANAGER	H. BENTON	5/28/97

U.S. DEPARTMENT OF ENERGY
YUCCA MOUNTAIN SITE CHARACTERIZATION PROJECT
M&O CIVILIAN RADIOACTIVE WASTE MANAGEMENT SYSTEM
MANAGEMENT & OPERATING CONTRACTOR

21-PWR WASTE PACKAGE
FUEL BASKET A-PLATE

SIZE	DOCUMENT IDENTIFIER: CI IDENTIFIER / DRAWING NO.	REV
D	BBAA00000-01717-2700-16014-	00
SCALE 0.250	Q.A. CLASSIFICATION 0	W.B.S. 1.2.2 / CAD FILE

RECORD DESIGNATOR QA:L

APERTURE CARD
Also Available on Aperture Card

19

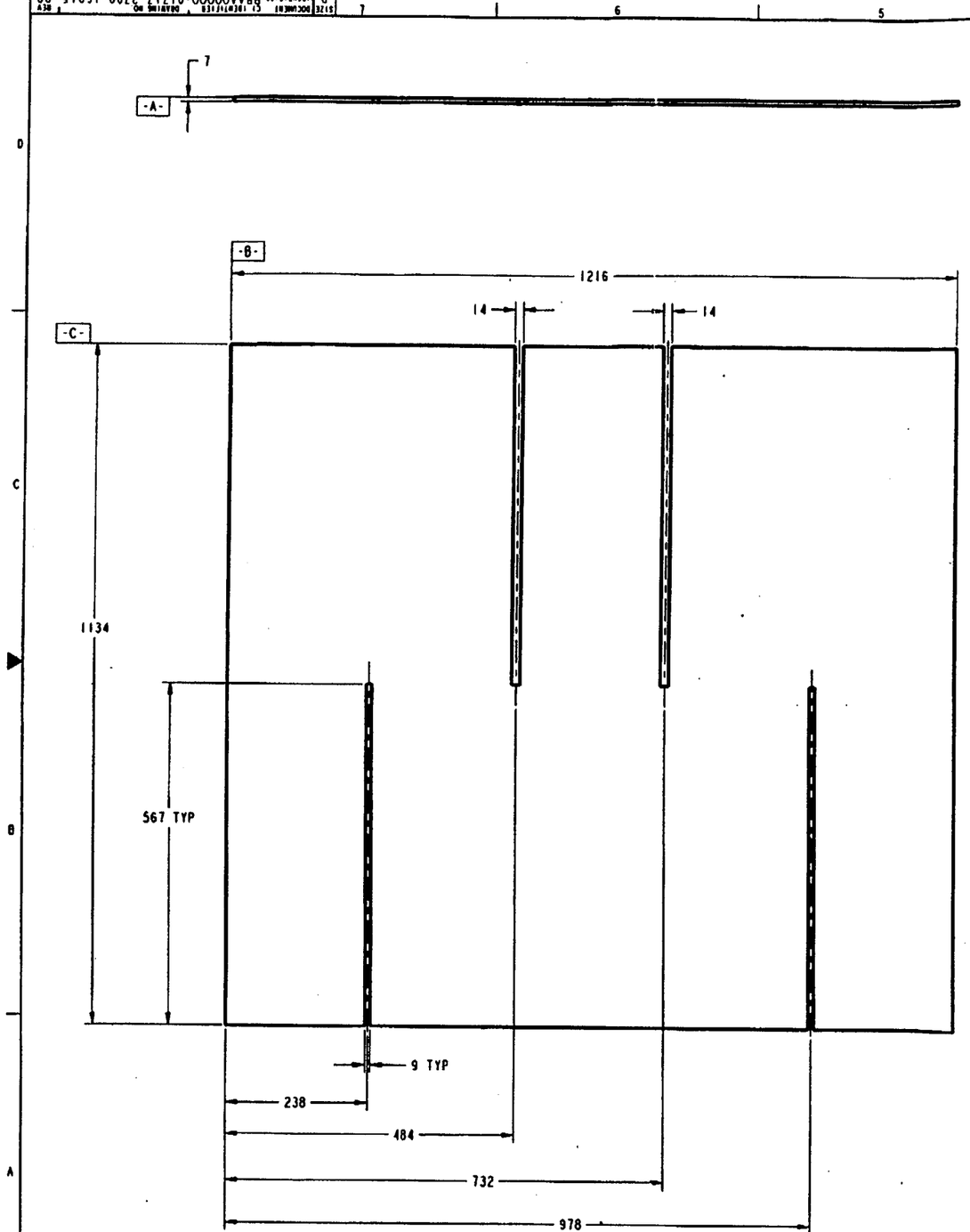

GENERAL NOTES:

1. THIS DRAWING IS BASED ON UNQUALIFIED DATA THAT DEPICTS PRELIMINARY DESIGN AND IS PRESENTED "FOR INFORMATION ONLY" THE INFORMATION IS NOT INTENDED FOR PROCUREMENT, FABRICATION , OR CONSTRUCTION.
2. FOR GENERAL NOTES & PARTS LIST SEE 21-PWR WASTE PACKAGE DISPOSAL CONTAINER DRAWING (DI: BBAA00000-01717-2700-15897 REV 00).

DO NOT SCALE FROM THIS DRAWING

9903020206-20

REV	ISSUED APPROVED	DESCRIPTION	DATE	DRN	CHK	VER	M/A	S.E.	Q.A.	D.N.
00										

APPROVAL	INITIAL/DATE
DRAWN G. CORNELL	6-18-97
ORIGINATOR H. PLUMBER	
CHECKED S. BENNETT	
VERIFICATION N/A	
LEAD DESIGN ENGINEER T. DOERING	
QUALITY ASSURANCE S. DAHA	
DEPARTMENT MANAGER H. BENTON	

U.S. DEPARTMENT OF ENERGY
YUCCA MOUNTAIN SITE CHARACTERIZATION PROJECT
M&O CIVILIAN RADIOACTIVE WASTE MANAGEMENT SYSTEM
MANAGEMENT & OPERATING CONTRACTOR

21-PWR WASTE PACKAGE
FUEL BASKET B-PLATE

SIZE D | DOCUMENT IDENTIFIER: BBAA00000-01717-2700-16015- | REV 00
SCALE 0.250 | Q.A. CLASSIFICATION 0 | W.B.S. CAD FILE 1.2.2

RECORD DESIGNATOR QA:L

APERTURE CARD
Also Available on Aperture Card

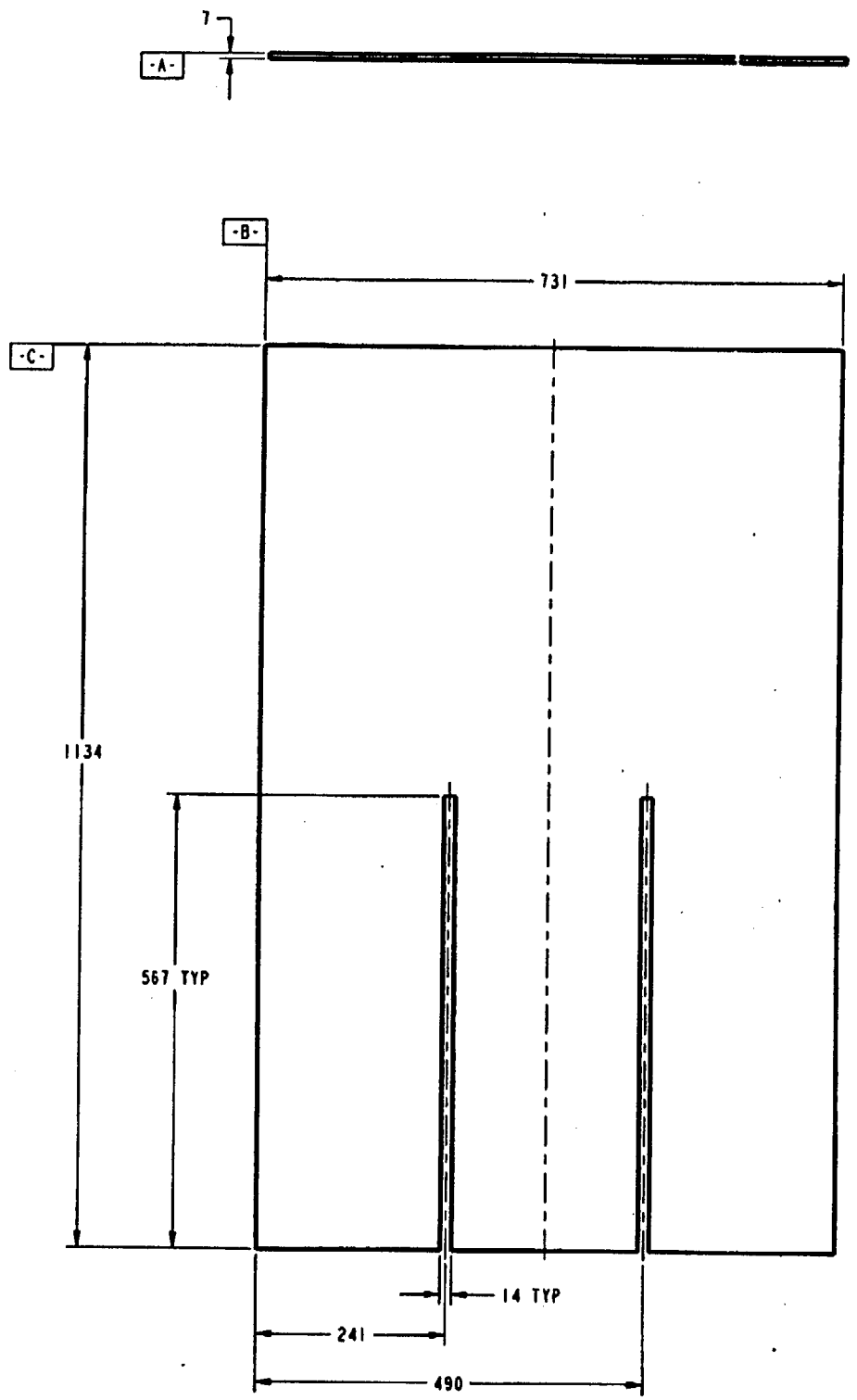

GENERAL NOTES:

1. THIS DRAWING IS BASED ON UNQUALIFIED DATA THAT DEPICTS PRELIMINARY DESIGN AND IS PRESENTED "FOR INFORMATION ONLY" THE INFORMATION IS NOT INTENDED FOR PROCUREMENT, FABRICATION , OR CONSTRUCTION.
2. FOR GENERAL NOTES & PARTS LIST SEE 21-PWR WASTE PACKAGE DISPOSAL CONTAINER DRAWING (D1: BBAA00000-01717-2700-15097 REV 00).

APERTURE CARD
Also Available on Aperture Card

DO NOT SCALE FROM THIS DRAWING

9903020206-21

REV	DESCRIPTION	DATE	DRN	CHK	CHK	VER	S.D.E	Q.A.	D.H.
00	ISSUED APPROVED								

APPROVAL	INITIAL/DATE
DRAWN G. CONNELL	7-30-97
ORIGINATOR M. PLINSKI	7/30/97
CHECKED S. BENNETT	7/30/97
VERIFICATION N/A	
LEAD DESIGN ENGINEER T. DOERING	
QUALITY ASSURANCE S. DRUA	
DEPARTMENT MANAGER N. DEHION	

U.S. DEPARTMENT OF ENERGY
YUCCA MOUNTAIN SITE CHARACTERIZATION PROJECT
M&O CIVILIAN RADIOACTIVE WASTE MANAGEMENT SYSTEM
MANAGEMENT & OPERATING CONTRACTOR

21-PWR WASTE PACKAGE
FUEL BASKET C-PLATE

SIZE	DOCUMENT IDENTIFIER:	C1 IDENTIFIER	DRAWING NO.	REV
B		BBAA00000-	01717-2700-16016-	00

SCALE	Q A	CLASSIFICATION	W.B.S.	CAD FILE
0.250		Q	1.2.3	

RECORD DESIGNATOR QA:L

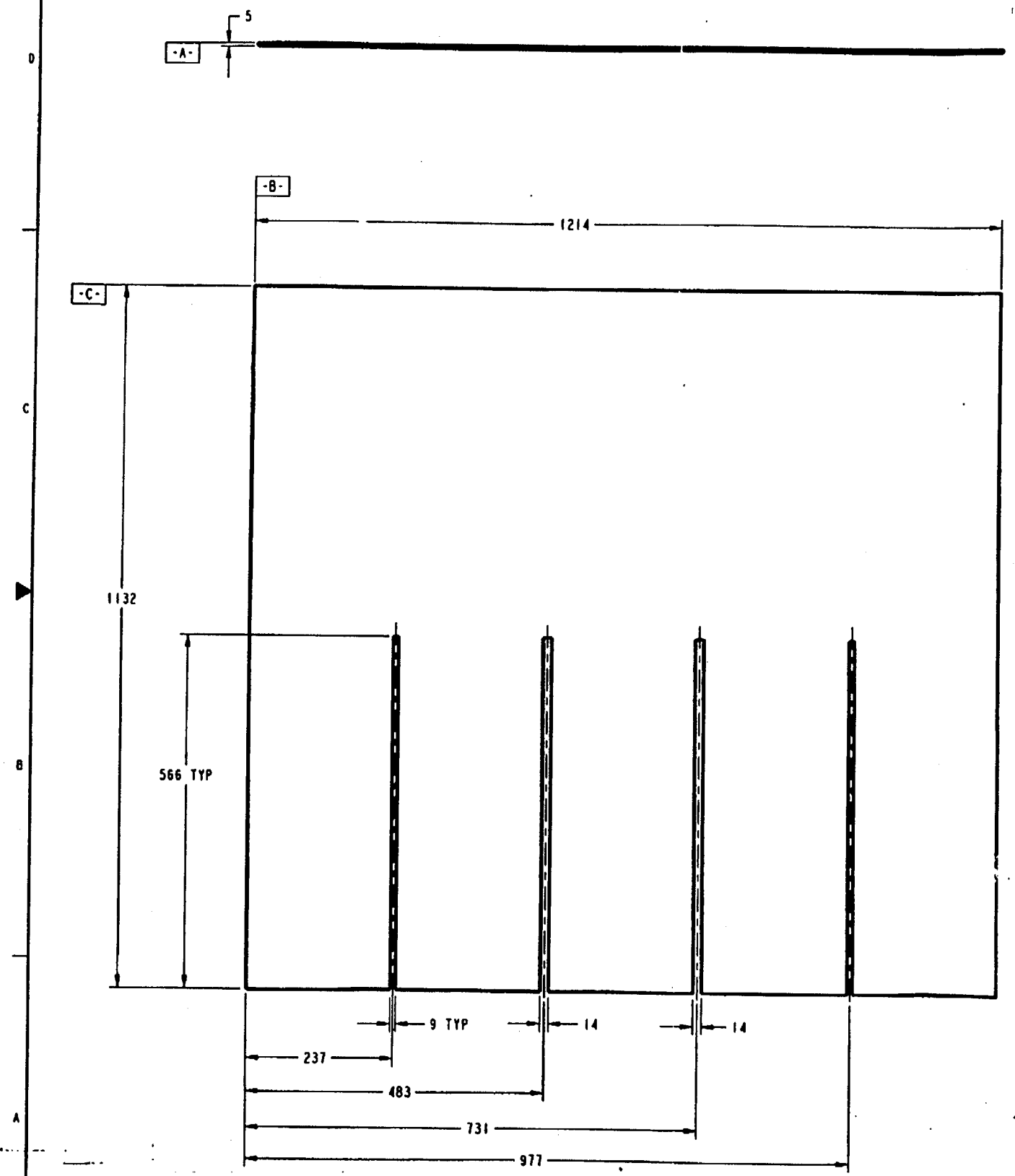

GENERAL NOTES:

1. THIS DRAWING IS BASED ON UNQUALIFIED DATA THAT DEPICTS PRELIMINARY DESIGN AND IS PRESENTED "FOR INFORMATION ONLY" THE INFORMATION IS NOT INTENDED FOR PROCUREMENT, FABRICATION , OR CONSTRUCTION.
2. FOR GENERAL NOTES & PARTS LIST SEE 21-PWR WASTE PACKAGE DISPOSAL CONTAINER DRAWING (D1; BBAA00000-01717-2700-15997 REV 00).

DO NOT SCALE FROM THIS DRAWING

REV	DESCRIPTION	DRN	CHK	VER	L.D.E.	Q.A.	D.N.
00	ISSUED APPROVED						

APPROVAL	INITIAL/DATE
DRAWN G. CORNELL	
ORIGINATOR H. PLUSSER	
CHECKED S. BENNETT	
VERIFICATION N/A	
LEAD DESIGN ENGINEER T. DOERING	
QUALITY ASSURANCE	
DEPARTMENT MANAGER H. BESTON	

U.S. DEPARTMENT OF ENERGY
YUCCA MOUNTAIN SITE CHARACTERIZATION PROJECT
CIVILIAN RADIOACTIVE WASTE MANAGEMENT SYSTEM
MANAGEMENT & OPERATING CONTRACTOR

21-PWR WASTE PACKAGE
FUEL BASKET D-PLATE

SIZE D | DOCUMENT IDENTIFIER: BBAA00000-01717-2700-16017- | CI IDENTIFIER | DRAWING NO. | REV 00
SCALE 0.250 | Q.A. CLASSIFICATION Q | W.B.S. 1.2.2 | CAD FILE

APERTURE CARD
Available on request

9903020206-22

RECORD DESIGNATOR

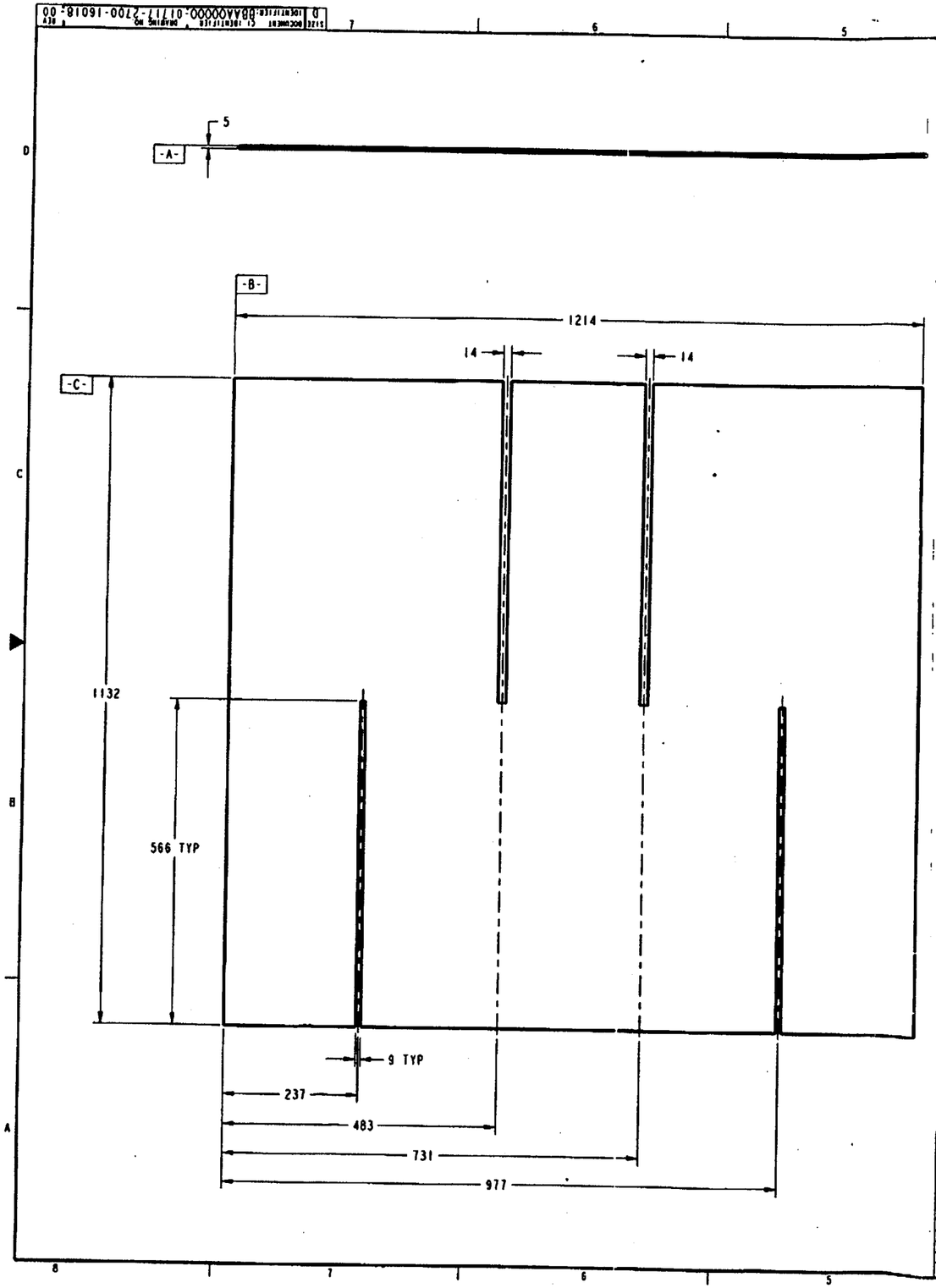

GENERAL NOTES:

1. ~~THIS~~ DRAWING IS BASED ON UNQUALIFIED DATA THAT DEPICTS PRELIMINARY DESIGN AND IS PRESENTED "FOR INFORMATION ONLY" THE INFORMATION IS NOT INTENDED FOR PROCUREMENT, FABRICATION , OR CONSTRUCTION.
2. FOR GENERAL NOTES & PARTS LIST SEE 21-PWR WASTE PACKAGE DISPOSAL CONTAINER DRAWING ID: BBAA00000-01717-2700-15897 REV 001.

DO NOT SCALE FROM THIS DRAWING

REV	DESCRIPTION	DATE	DRN	ORG	CHK	VER	L.D.E.	Q.A.	D.M.
00	ISSUED APPROVED				N/A				

APPROVAL	INITIAL/DATE
DRAWN G. CONNELL	
ORIGINATOR H. PLUNKEL	
CHECKED S. BENNETT	
VERIFICATION N/A	
LEAD DESIGN ENGINEER T. DOERING	
QUALITY ASSURANCE S. DAVIS	
DEPARTMENT MANAGER H. BENTON	

U.S. DEPARTMENT OF ENERGY
YUCCA MOUNTAIN SITE CHARACTERIZATION PROJECT
CIVILIAN RADIOACTIVE WASTE MANAGEMENT SYSTEM
M&O MANAGEMENT & OPERATING CONTRACTOR

21-PWR WASTE PACKAGE
FUEL BASKET E-PLATE

SIZE	DOCUMENT IDENTIFIER: CI IDENTIFIER	DRAWING NO.	REV
D	BBAA00000-	01717-2700-16018-	00
SCALE 0.250	U.A. CLASSIFICATION 0	W.B.S. CAD FILE 1.2.2	

RECORD DESIGNATOR

APERTURE CARD

Also Available on Aperture Card

9903020206 -23

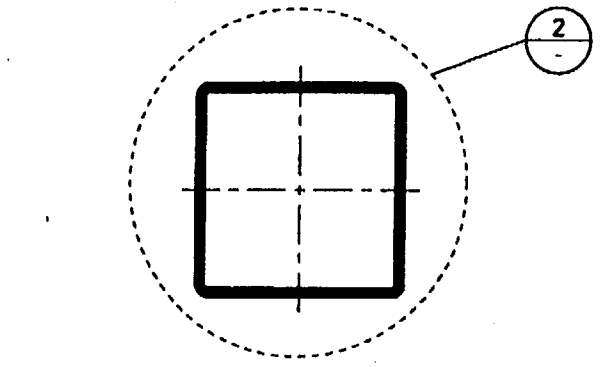

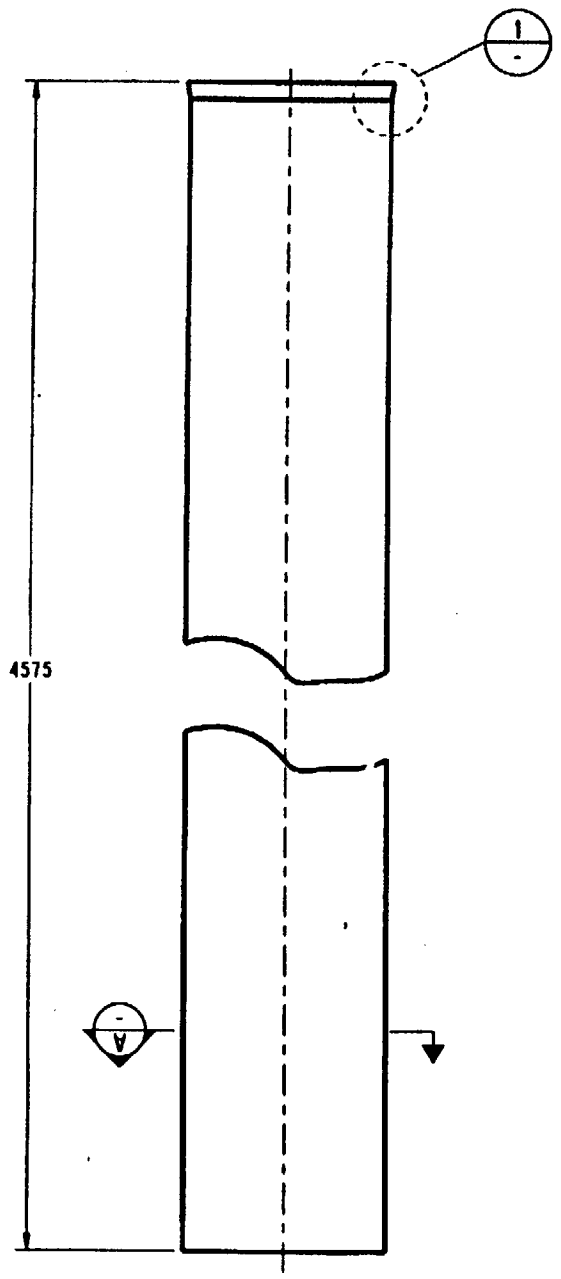

SECTION A
SCALE: 0.500

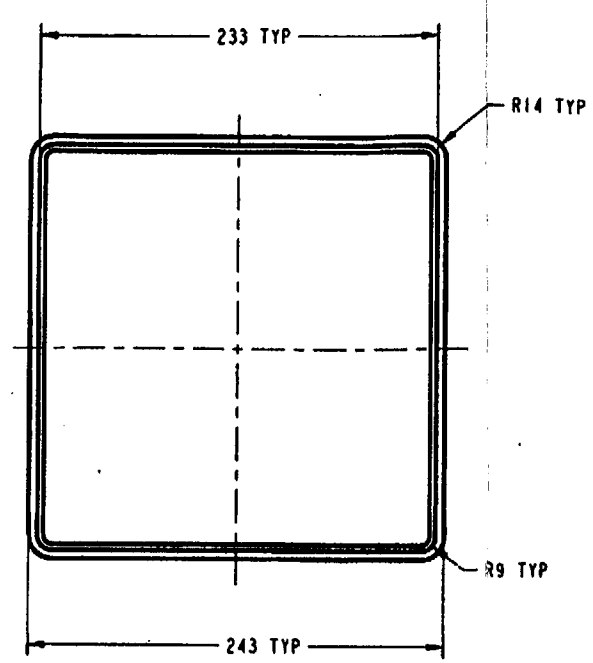

DETAIL 2
SCALE: 0.500

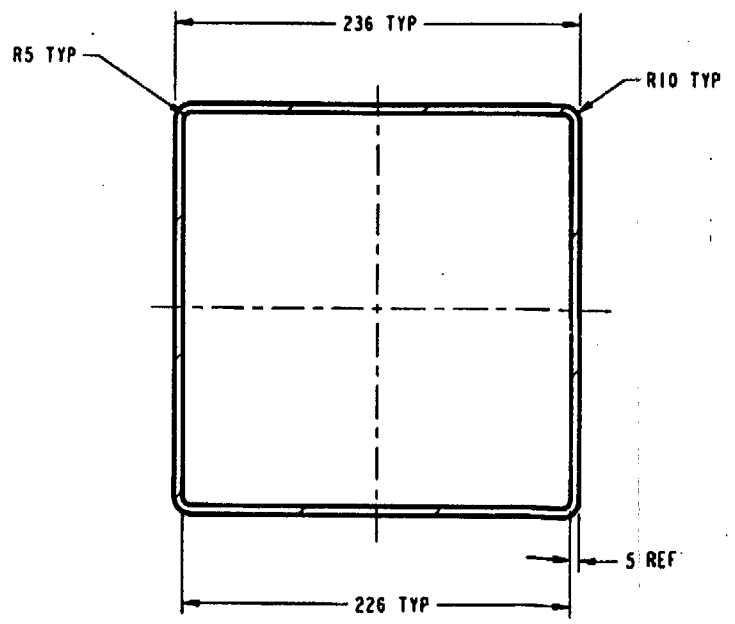

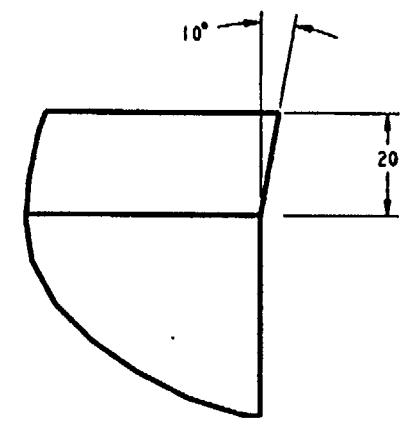

DETAIL 1
SCALE: 1.500

GENERAL NOTES:

1. THIS DRAWING IS BASED ON UNQUALIFIED DATA THAT DEPICTS PRELIMINARY DESIGN AND IS PRESENTED "FOR INFORMATION ONLY" THE INFORMATION IS NOT INTENDED FOR PROCUREMENT, FABRICATION, OR CONSTRUCTION.
2. FOR GENERAL NOTES & PARTS LIST SEE 21-PWR WASTE PACKAGE DISPOSAL CONTAINER DRAWING (ID: BBAA00000-01717-2700-15997 REV 00).

DO NOT SCALE FROM THIS DRAWING

APERTURE CARD

9903020206-24

REV	ISSUED APPROVED	DESCRIPTION	DATE	DRN	CHG	CHK	VER	L.D.E	Q.A.	D.N.

APPROVAL		INITIAL/DATE
DRAWING	G. CONNELLY	5-28-97
CHECKER	H. PLINSKI	5/28/97
CHECKED	S. BENNETT	5/28/97
VERIFICATION	N/A	
LEAD DESIGN ENGINEER	T. DOERING	5-28-97
QUALITY ASSURANCE	S. DONA	5/28/97
DEPARTMENT MANAGER	H. BEATON	5/28/97

U.S. DEPARTMENT OF ENERGY
YUCCA MOUNTAIN SITE CHARACTERIZATION PROJECT
CIVILIAN RADIOACTIVE WASTE MANAGEMENT SYSTEM
MANAGEMENT & OPERATING CONTRACTOR

21-PWR WASTE PACKAGE FUEL BASKET TUBE

SIZE	DOCUMENT IDENTIFIER:	CI IDENTIFIER	DRAWING NO.	REV
D	BBAA00000-01717-2700-16019-			00
SCALE 0.250	D.R. CLASSIFICATION 0		U.B.S. 1.2.2	CAD FILE

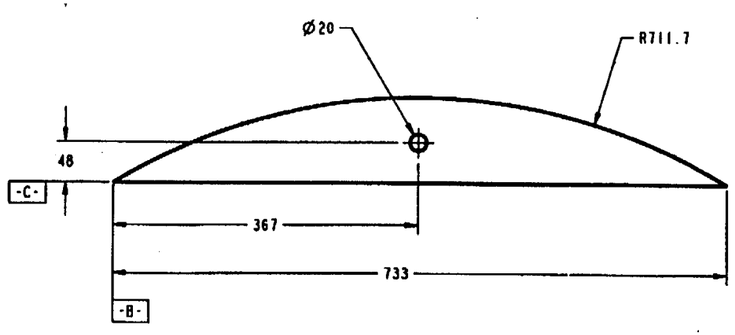

GENERAL NOTES:

1. THIS DRAWING IS BASED ON UNQUALIFIED DATA THAT DEPICTS PRELIMINARY DESIGN AND IS PRESENTED "FOR INFORMATION ONLY" THE INFORMATION IS NOT INTENDED FOR PROCUREMENT, FABRICATION , OR CONSTRUCTION.
2. FOR GENERAL NOTES & PARTS LIST SEE 21-PWR WASTE PACKAGE DISPOSAL CONTAINER DRAWING (DI: BBAA00000-01717-2700-15097 REV 00).

APERTURE CARD

9903020206-25

DO NOT SCALE FROM THIS DRAWING

REV	DESCRIPTION	DATE	DRN	ORG	CHK	VER	L.D.E.	Q.A.	D.M.
01	ISSUED APPROVED								

APPROVAL	INITIAL/DATE
DRAWN G. CONNELL	3-18-97
DETAILER H. PLISSKI	
CHECKED G. BENNETT	
VERIFICATION N/A	
LEAD DESIGN ENGINEER T. DOERING	
QUALITY ASSURANCE G. DANA	
DEPARTMENT MANAGER W. BENTON	

U.S. DEPARTMENT OF ENERGY
YUCCA MOUNTAIN SITE CHARACTERIZATION PROJECT
CIVILIAN RADIOACTIVE WASTE MANAGEMENT SYSTEM
M&O MANAGEMENT & OPERATING CONTRACTOR

21-PWR WASTE PACKAGE
BASKET SIDE COVER

SIZE	DOCUMENT IDENTIFIER	CI IDENTIFIER	DRAWING NO.	REV
D		BBAA00000-	01717-2700-16020-	00

SCALE 0.312 | N.A. CLASSIFICATION | U.N.S. | CAD FILE

RECORD DESIGNATOR DA-1

25

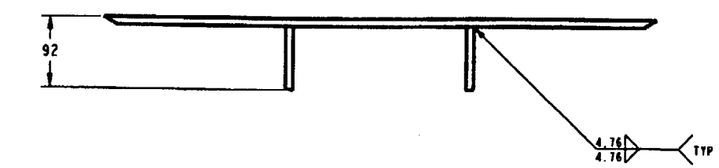

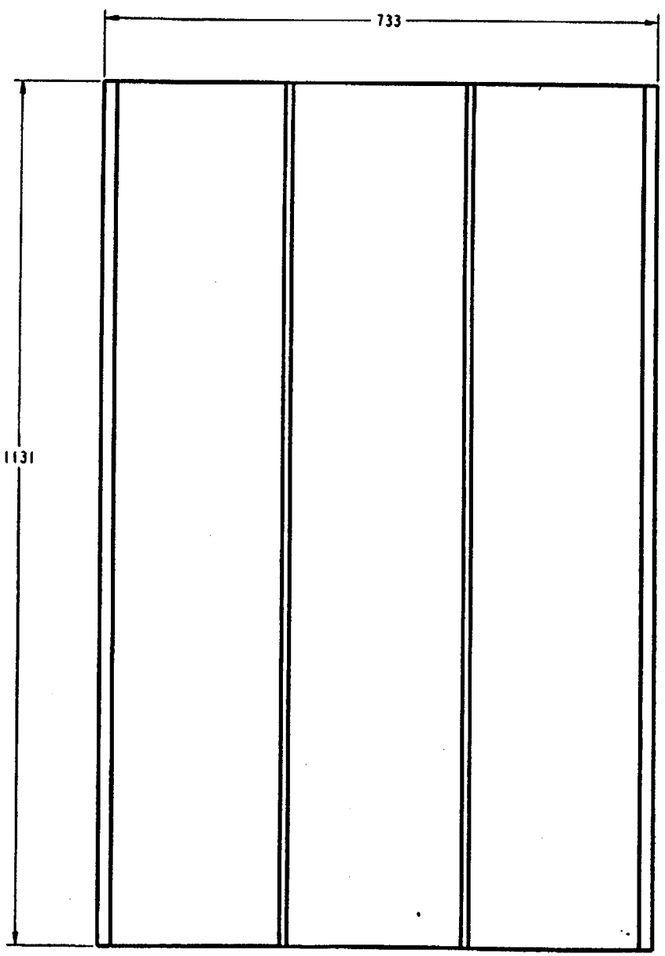

GENERAL NOTES:

1. THIS DRAWING IS BASED ON UNQUALIFIED DATA THAT DEPICTS PRELIMINARY DESIGN AND IS PRESENTED "FOR INFORMATION ONLY" THE INFORMATION IS NOT INTENDED FOR PROCUREMENT, FABRICATION , OR CONSTRUCTION.
2. FOR GENERAL NOTES & PARTS LIST SEE 21-PWR WASTE PACKAGE DISPOSAL CONTAINER DRAWING (DI: BBAA00000-01717-2700-15997 REV 00).

APERTURE CARD

9903020206-26

DO NOT SCALE FROM THIS DRAWING

REV	DESCRIPTION	DRN	CHK	VER	L.D.E	Q.A.	D.M.
00	ISSUED APPROVED			N/A			

APPROVAL	INITIAL/DATE
DRAWN G. CONNELL	
ORIGINATOR M. PLINSKI	
CHECKED S. DEWHETT	
VERIFICATION N/A	
LEAD DESIGN ENGINEER T. DOERING	
QUALITY ASSURANCE S. DASIA	
DEPARTMENT MANAGER M. DEVICO	

U.S. DEPARTMENT OF ENERGY
YUCCA MOUNTAIN SITE CHARACTERIZATION PROJECT
CIVILIAN RADIOACTIVE WASTE MANAGEMENT SYSTEM
M&O MANAGEMENT & OPERATING CONTRACTOR

21-PWR WASTE PACKAGE
BASKET SIDE GUIDE WELDMENT

SIZE	DOCUMENT IDENTIFIER	CI IDENTIFIER	DRAWING NO.	REV
D	BBAA00000-	01717-2700-	16021-	00

SCALE 0.281 | U.S. CLASSIFICATION U | U.S. CAD FILE 1,2,3

RECORD DESIGNATOR

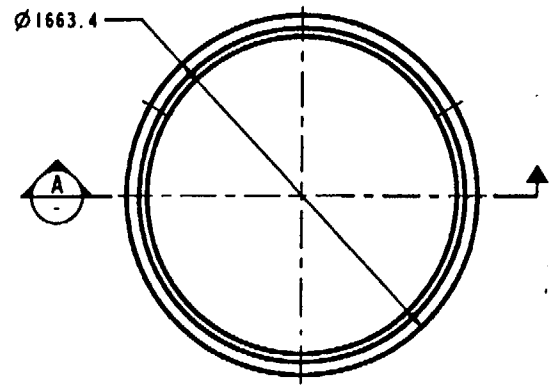

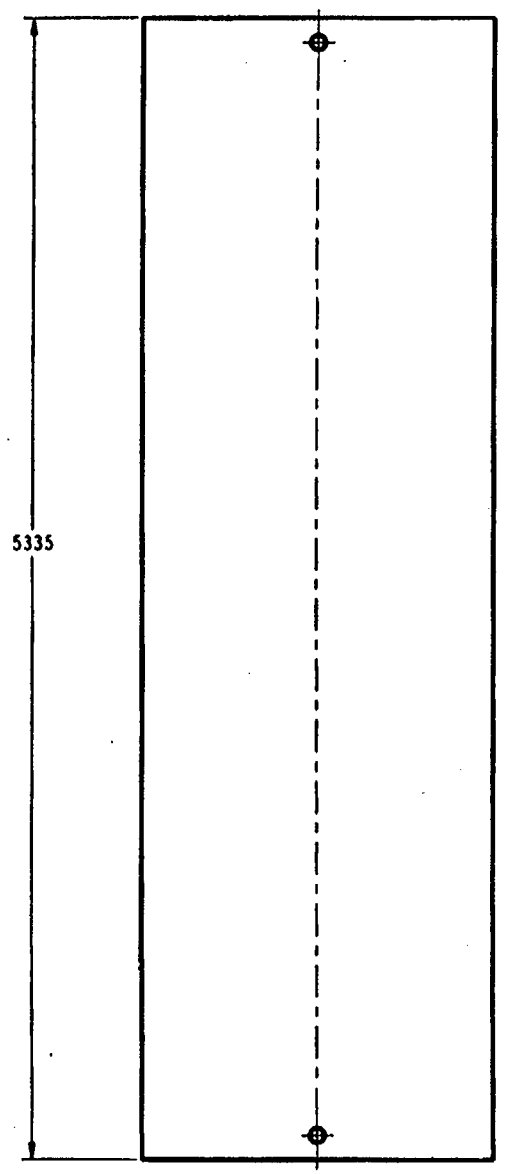

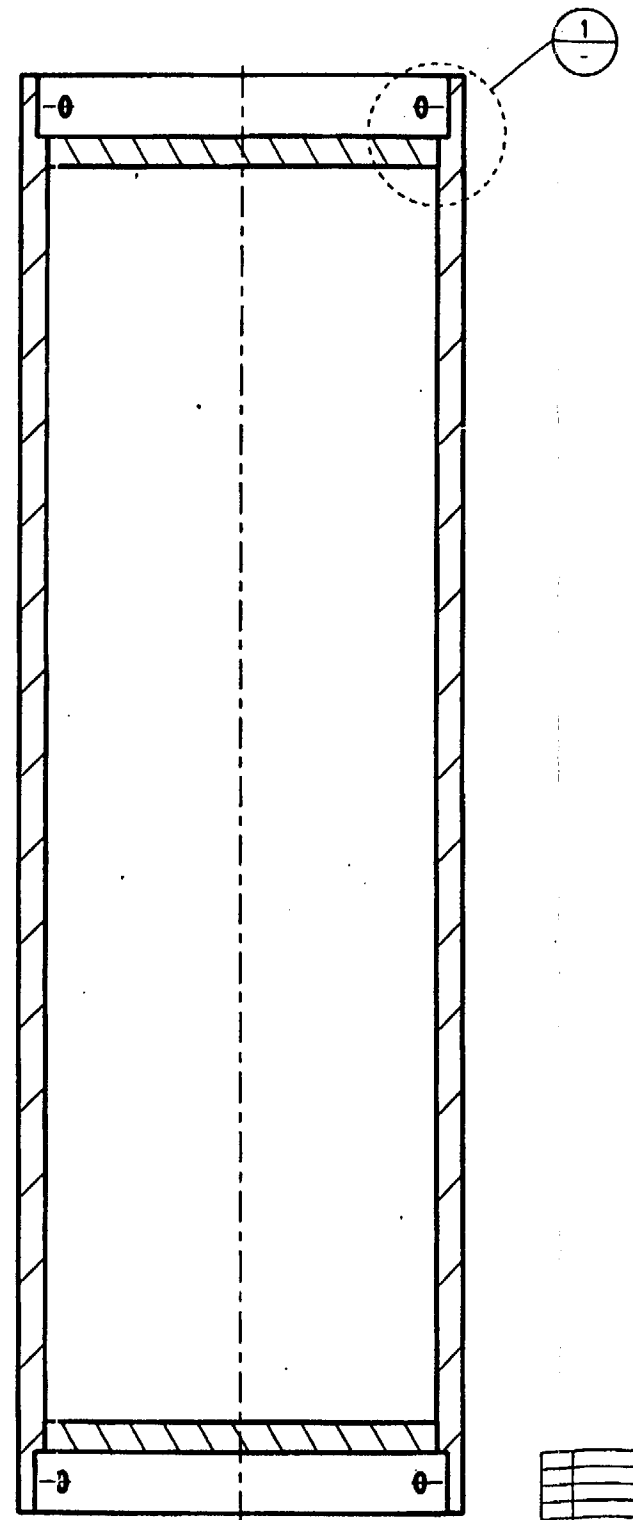

SECTION A
SCALE: 0.078

GENERAL NOTES:

1. THIS DRAWING IS BASED ON UNQUALIFIED DATA THAT DEPICTS PRELIMINARY DESIGN AND IS PRESENTED "FOR INFORMATION ONLY" THE INFORMATION IS NOT INTENDED FOR PROCUREMENT, FABRICATION , OR CONSTRUCTION.
2. FOR GENERAL NOTES & PARTS LIST SEE 21-PWR WASTE PACKAGE DISPOSAL CONTAINER DRAWING (DI: BBAA00000-01717-2700-15997 REV 001).

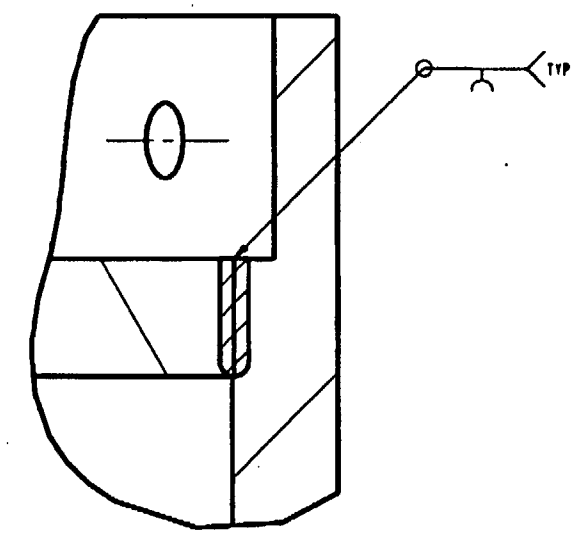

DETAIL 1
SCALE: 0.312

APERTURE CARD

Also Available on Aperture Card

9903020206-27

DO NOT SCALE FROM THIS DRAWING

REV	DESCRIPTION	DATE	DRW	DRG	CHK	VER	D.L.	Q.A.	D.M.
00	ISSUED APPROVED								

APPROVAL		INITIAL/DATE
DRAWN	G. CONNELL	9-20-97
ORIGINATOR	M. PLISSEI	
CHECKED	S. BENNETT	
VERIFICATION	N/A	
LEAD DESIGN ENGINEER	T. HOCKING	9-28-97
QUALITY ASSURANCE		
DEPARTMENT MANAGER	N. BERTON	

U.S. DEPARTMENT OF ENERGY
YUCCA MOUNTAIN SITE CHARACTERIZATION PROJECT
CIVILIAN RADIOACTIVE WASTE MANAGEMENT SYSTEM
MANAGEMENT & OPERATING CONTRACTOR

21-PWR WASTE PACKAGE CORROSION ALLOWANCE BARRIER WELDMENT

SIZE	DOCUMENT IDENTIFIER: CI IDENTIFIER / DRAWING NO.	REV
D	BBAA00000-01717-2700-16022-	00

SCALE	Q.A. CLASSIFICATION	W.B.S.	CAD FILE
0.092	Q	1.2.2	

RECORD DESIGNATOR QA:L

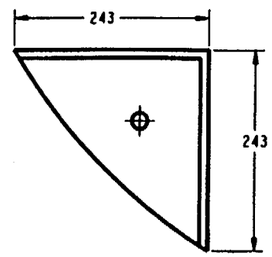

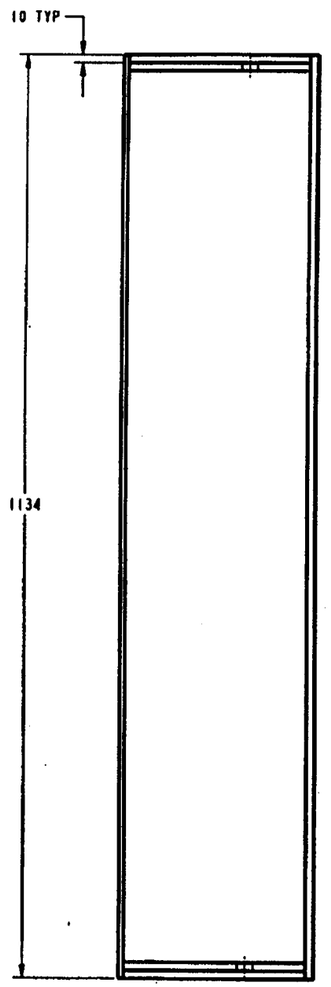

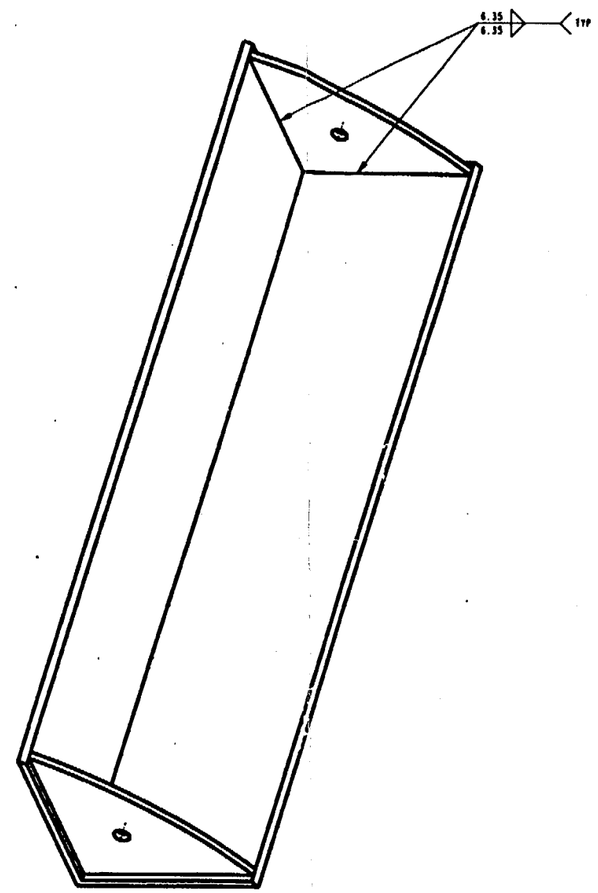

GENERAL NOTES:

1. THIS DRAWING IS BASED ON UNQUALIFIED DATA THAT DEPICTS PRELIMINARY DESIGN AND IS PRESENTED "FOR INFORMATION ONLY" THE INFORMATION IS NOT INTENDED FOR PROCUREMENT, FABRICATION , OR CONSTRUCTION.
2. FOR GENERAL NOTES & PARTS LIST SEE 21-PWR WASTE PACKAGE DISPOSAL CONTAINER DRAWING (DI: BBAA00000-01717-2700-15897 REV 003).

APERTURE CARD
Also Available on Aperture Card

9903020206-28

DO NOT SCALE FROM THIS DRAWING

REV	DESCRIPTION	DATE	DRN	CHK	CHK	VER	L.D.E.	Q.A.	D.M.
00	ISSUED APPROVED								

APPROVAL	INITIAL/DATE
DRAWN G. CORNELL	8-28-97
ORIGINATOR H. PLUMBER	8/28/97
CHECKED S. BENNETT	8/28/97
VERIFICATION N/A	
LEAD DESIGN ENGINEER T. BOERING	8-28-97
QUALITY ASSURANCE S. DANA	8/28/97
DEPARTMENT MANAGER H. BENTON	8/28/97

U.S. DEPARTMENT OF ENERGY
YUCCA MOUNTAIN SITE CHARACTERIZATION PROJECT
CIVILIAN RADIOACTIVE WASTE MANAGEMENT SYSTEM
M&O MANAGEMENT & OPERATING CONTRACTOR

21-PWR WASTE PACKAGE
BASKET CORNER GUIDE WELDMENT

SIZE	DOCUMENT IDENTIFIER:	CI IDENTIFIER	DRAWING NO.	REV
D		BBAA00000-	01717-2700-16023-	00
SCALE 0.300	U.A. CLASSIFICATION Q		W.B.S. CAD FILE 1.2.2	

RECORD DESIGNATOR QA:L

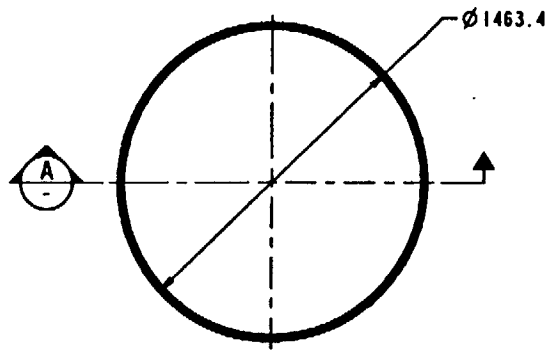

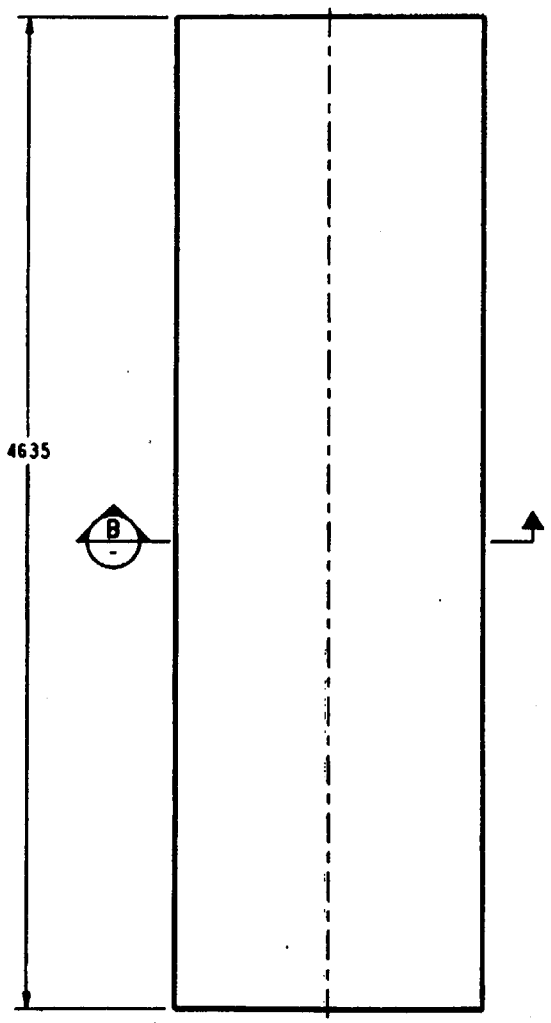

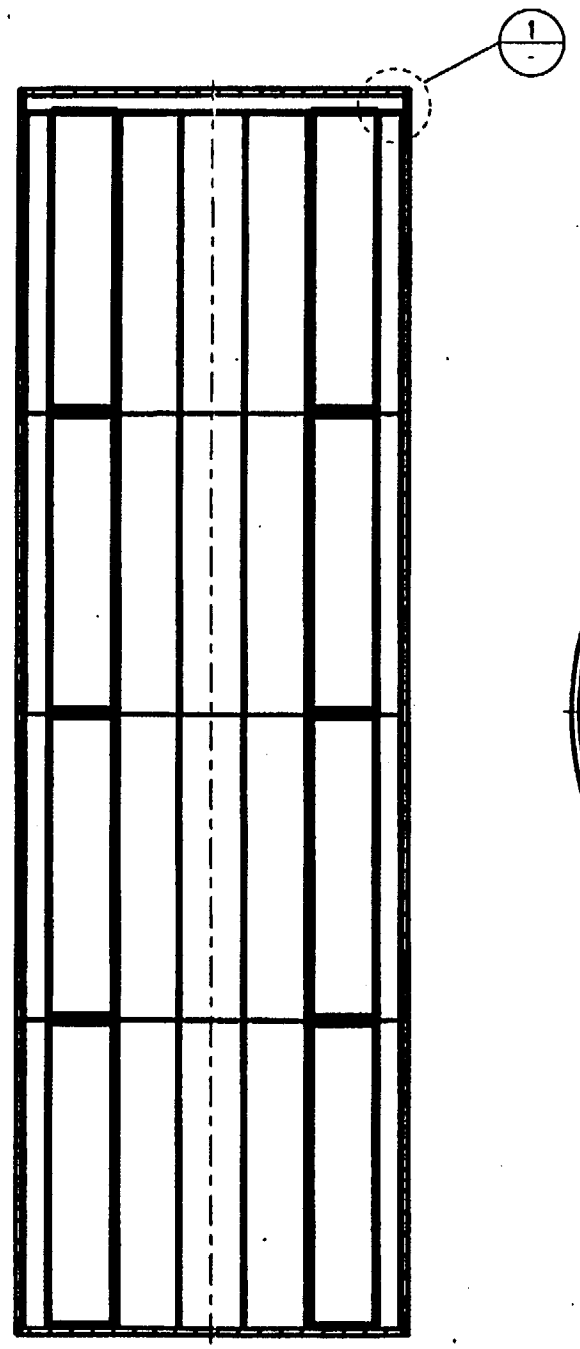

SECTION A
SCALE: 0.070

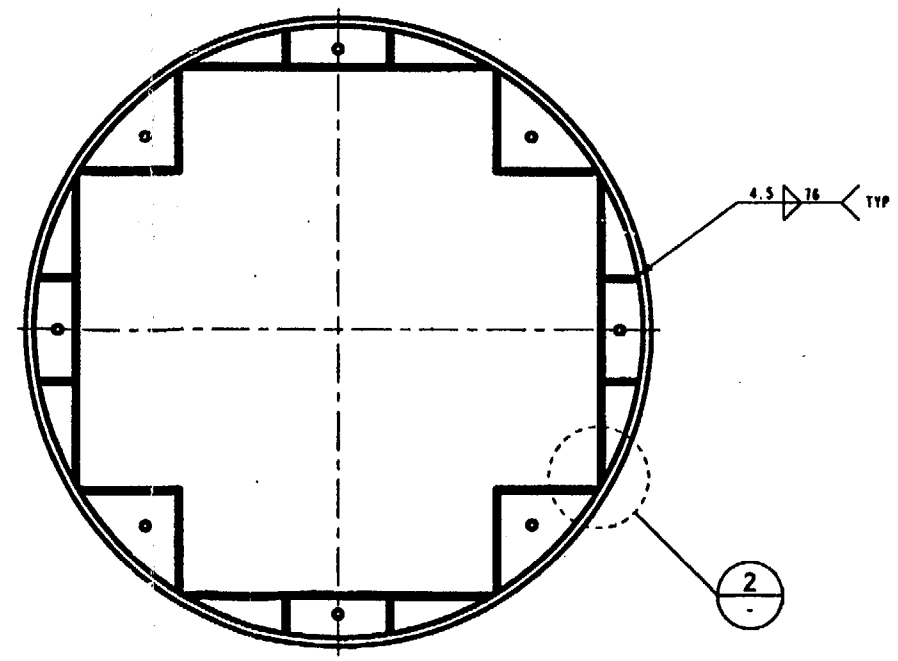

SECTION B
SCALE: 0.125

GENERAL NOTES:

1. THIS DRAWING IS BASED ON UNQUALIFIED DATA THAT DEPICTS PRELIMINARY DESIGN AND IS PRESENTED "FOR INFORMATION ONLY" THE INFORMATION IS NOT INTENDED FOR PROCUREMENT, FABRICATION , OR CONSTRUCTION.
2. FOR GENERAL NOTES & PARTS LIST SEE 21-PWR WASTE PACKAGE DISPOSAL CONTAINER DRAWING (ID: BBAA00000-01717-2700-15897 REV 00).

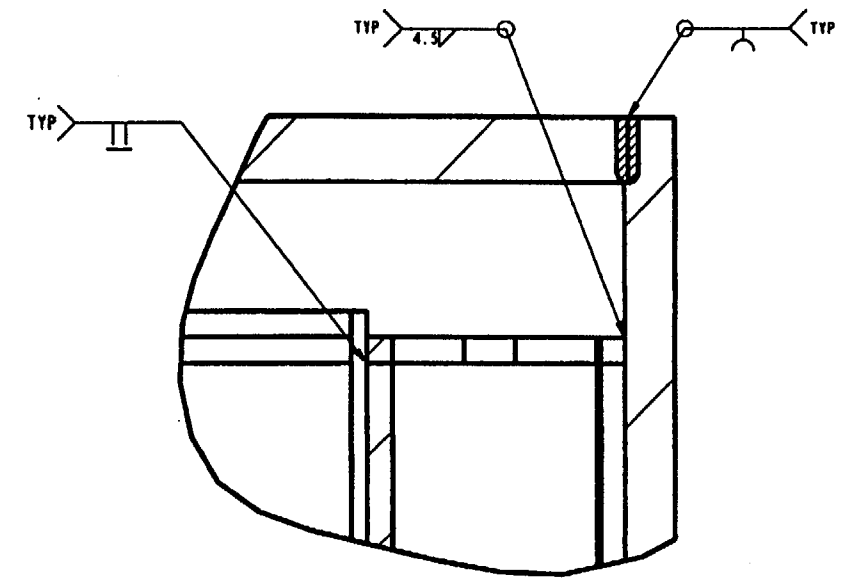

DETAIL 1
SCALE: 0.750

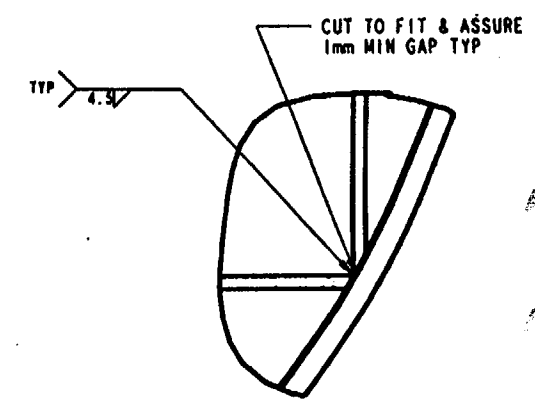

DETAIL 2
SCALE: 0.375

DO NOT SCALE FROM THIS DRAWING

9903020206 -29

REV	DESCRIPTION	DATE	DRN	CHG	CHK	VER	L.O.E.	Q.A.	D.N.
00	ISSUED APPROVED								

APPROVAL	INITIAL/DATE
DRAWN G. CORNELL	
ORIGINATOR M. PLISKEI	
CHECKED S. BENNETT	
VERIFICATION N/A	
LEAD DESIGN ENGINEER T. DOERING	
QUALITY ASSURANCE	
DEPARTMENT MANAGER H. BERTON	

U.S. DEPARTMENT OF ENERGY
YUCCA MOUNTAIN SITE CHARACTERIZATION PROJECT
CIVILIAN RADIOACTIVE WASTE MANAGEMENT SYSTEM
MANAGEMENT & OPERATING CONTRACTOR

21-PWR WASTE PACKAGE
CORROSION RESISTANT
BARRIER WELDMENT

SIZE	DOCUMENT IDENTIFIER:	CI IDENTIFIER	DRAWING NO.	REV
D	BBAA00000-01717-2700-16024-			00

SCALE 0.062 | Q.A. CLASSIFICATION Q | W.B.S. 1.2.2 | CAD FILE

RECORD DESIGNATOR QA:L

APERTURE CARD

Also Available on Aperture Card

29

1/14/97

Los Alamos
NATIONAL LABORATORY

Earth and Environmental Sciences Division
EES-13–Nuclear Waste Management R&D
Mail Stop J521, Los Alamos, NM 87545
Phone (505) 667-9768, Fax (505) 667-1934

THIS IS A YMP MILESTONE

NO. SP321AM4

January 14, 1997

EES-13-01-97-1361

Larry Hayes
Manager of Scientific Program Operations
M&O/WCFS, Mail Stop 423
101 Convention Center Drive
Las Vegas, NV 89109

Transmittal of Completed Los Alamos milestone SP321AM4, "A Preliminary Three-Dimensional Mineralogical Model of Yucca Mountain," by D. L. Bish et al. (WBS 1.2.3.2.1.2.2)

Dear Mr. Hayes:

In compliance with YAP-5.1Q, I am writing to inform you that the following Los Alamos milestone has been completed.

> Milestone SP321AM4, "A Preliminary Three-Dimensional Mineralogical Model of Yucca Mountain," by D. L. Bish et al. (WBS 1.2.3.2.1.2.2)

This milestone was designated a letter report in the Los Alamos Project Control system. A letter report as defined by the system does not require a policy review by the Project. This milestone report may become part of a large document of publishable quality.

A copy of this milestone is attached to this letter.

In compliance with YAP-5.1Q, revision 3, I have attached a YAR form.

Sincerely,

Julie A. Canepa

JAC/SHK/jr

Att: a/s
Cy w/enc.
D. Bryan, DOE/YMSCO, MS 523
S. Hanauer, DOE/HQ, Washington, DC
R. A. Levich, DOE/YMSCO, MS 523
B. Mukhopadhyay, PMO, Las Vegas, NV
M. T. Peters, M&O/WCFS, MS 423
D. L. Bish, EES-1, MS D649
G. Y. Bussod, EES-13, MS J521
J. A. Canepa, EES-13, MS J521
S. H. Klein, EES-13, MS J521
A. L. Thompson, EES-13/LV, MS J902
J. E Young, LATA, MS J521
P. P. Bell, M&O/TRW, MS 12
EES-13 File, MS J521

DRAFT DISCLAIMER

This contractor document was prepared for the U.S. Department of Energy (DOE), but has not undergone programmatic, policy, or publication review, and is provided for information only. The document provides preliminary information that may change based on new information or analysis, and is not intended for publication or wide distribution; it is a lower level contractor document that may or may not directly contribute to a published DOE report. Although this document has undergone technical reviews at the contractor organization, it has not undergone a DOE policy review. Therefore, the views and opinions of authors expressed do not necessarily state or reflect those of the DOE. However, in the interest of the rapid transfer of information, we are providing this document for your information.