Paul Priestholt

30-Nov-1989

YUCCA MOUNTAIN PROJECT

EXPLORATORY SHAFT FACILITY ALTERNATIVES STUDY

IMPLEMENTATION PLAN - REV. 0

NOVEMBER 30, 1989

9001020305 891214
PDR WASTE
WM-1 PDR

EXECUTIVE SUMMARY

The Yucca Mountain Project will perform an evaluation, conducted under a quality assurance program that meets the requirements of NNWSI/88-9 to identify various Exploratory Shaft Facility configuration and construction method options, to evaluate those options, and to select a preferred option to be used as the basis for subsequent design efforts.

The Project Office has assigned the lead technical and coordination responsibility for the evaluation to Sandia National Laboratories (SNL). Other Project participants will be assigned by the Project Office, at the request of SNL, to perform individual tasks within this evaluation.

The evaluation will be performed by conducting several individual tasks as follows:

A survey will be made of existing design requirements, identifying those which may impact the selection of the preferred repository access configuration and construction methods and the repository/ESF interfaces. Similarly, those requirements which may impact the selection of the preferred ESF configuration and construction methods will also be identified. To the extent possible, these requirements will be quantified and traceability of the design inputs established.

A literature survey will be made of existing Yucca Mountain Project documents, and the repository and ESF options that were considered in the past will be identified. Additionally, all comments, concerns and issues raised by the NRC, NWTRB, the State of Nevada, the DOE, and others, which may impact the selection of the preferred repository option or the preferred ESF configuration and construction option, will be identified.

Using the results from the bibliographic surveys described above, specific repository access and ESF options will be identified and will undergo an initial screening process in order to select viable options for further evaluation.

A methodology will be developed for use in the final evaluation of the viable repository access and ESF options. This methodology will consider both regulatory and non-regulatory evaluation criteria.

The evaluation of the repository access options will be conducted first, and the preferred repository option will be identified. Next, an evaluation of the viable ESF configurations and construction methods will be conducted using the preferred repository access option as part of the evaluation criteria.

Finally, a preferred ESF configuration and construction method will be identified and will be presented to DOE in a final report. This report will consolidate all the information used in the evaluation and will present the conclusions and recommendations pertaining to the preferred ESF configuration and construction method.

30-Nov-1989

EXPLORATORY SHAFT FACILITY (ESF) ALTERNATIVES STUDY

IMPLEMENTATION PLAN

TABLE OF CONTENTS

EXECUTIVE SUMMARY

1.0 **INTRODUCTION**

1.1 Scope of Alternative Studies

1.2 Purpose of Implementation Plan

2.0 **PLAN MANAGEMENT AND IMPLEMENTATION**

2.1 Management

2.2 Organization

2.2.1 Responsibilities

2.2.2 Organizational Interfaces

2.3 Quality Assurance

2.4 Task Plans

2.5 Documentation

2.6 Deliverables

2.7 Schedule

2.8 Records Management

2.9 Reviews

3.0 **DEVELOPMENT OF EVALUATION METHODOLOGY**

3.1 Evaluation Criteria

3.1.1 Repository Evaluation Criteria

3.1.2 ESF Evaluation Criteria

3.2 Application of Criteria

3.3 Deliverables

4.0 **EVALUATION OF REPOSITORY AND ESF DESIGN AND CONSTRUCTION REQUIREMENTS**

4.1 Survey of Requirements

4.1.1 Repository Requirements

4.1.2 ESF Requirements

4.1.3 Testing Requirements

4.2 Quantification of Requirements

4.2.1 Repository and ESF Requirements

4.2.2 Testing Requirements

4.3 Traceability of Repository and ESF Design Input Data

4.4 Revision of Requirements

4.5 Deliverables

5.0 IDENTIFICATION OF REPOSITORY ACCESS AND ESF OPTIONS

5.1 Repository Access and ESF options

5.1.1 Literature Survey

5.1.2 Identification of New Options

5.2 Deliverables

6.0 SELECTION OF PREFERRED CONFIGURATION AND CONSTRUCTION METHODS

6.1 Performance Assessment

6.2 Preferred Repository Option

6.3 Preferred ESF Configuration and Construction Methods

6.4 Deliverables

7.0 REPORT

7.1 Revised RDR and SDRD

7.2 Alternatives Study Report Organization, Format and Content

7.2.1 Organization and Format

7.2.2 Contents of Final Report

1.0 INTRODUCTION

1.1 Scope of Alternative Studies

These alternative studies are being undertaken to evaluate and identify a basis for the design and construction of an Exploratory Shaft Facility (ESF) at the Yucca Mountain site. The scope of these studies will be limited to the identification of the preferred repository options (accesses, construction methods, the identification of a preferred location or locations for the ESF accesses and underground facilities based on repository-ESF interface considerations) and the selection of the preferred ESF configuration and construction method(s). The repository options will be developed to the extent necessary to perform this evaluation of the ESF.

For the purposes of this evaluation, "configuration" includes the orientation, geometry, layout, and depth of the exploratory shaft facility; the location and means of access to the exploratory shaft facility; and the design of any engineered elements of the exploratory shaft facility. It also includes the strategy for and the sequencing of testing to be conducted in the exploratory shaft facility during site characterization.

1.2 Purpose of Implementation Plan

The purpose of this implementation plan is to identify (1) the Yucca Mountain Project (YMP) participant organization responsible for management of these studies, (2) the responsibilities of, and organizational interfaces between the YMP participant organizations conducting these studies, (3) the quality assurance requirements applicable to these studies, (4) the proposed schedule for initiation and completion of these studies, (5) the methodology proposed for use in conducting these studies, (6) the work to be performed as part of these studies, and (7) the final product for these studies.

2.0 PLAN MANAGEMENT AND IMPLEMENTATION

This section describes the overall management, coordination, and implementation process for performing the tasks identified in this plan.

2.1 Management

The Project Office has assigned the lead technical and coordination responsibility for this plan and its implementation to Sandia National Laboratories (SNL). The Project Office will maintain administrative control of this task. This administrative control will include approval of resource allocations and activity schedules. At the request of SNL, project participants will be assigned, at Project Office direction, to the individual tasks in accordance with their WBS responsibilities.

2.2 Organization

The Project participants will be organized according to the responsibility matrix plan contained in Exhibit A. This matrix identifies the technical lead and support roles for each task. The matrix organization will allow interactive participant coverage of the activities required by each of the tasks described in this plan.

2.2.1 Responsibilities

The responsibilities of the participants are as follows:

The Project Office is responsible for work authorization, budget allocation, review and acceptance of the implementation plan, review and acceptance of the task deliverables, acceptance of the final report, and for management and direction of SNL, the lead organization for the ESF alternatives study.

T&MSS, under the direction of the Project Office Engineering and Development (E&D) Division will assist the Project Office in the guidance, management and monitoring of the progress of this evaluation. Additionally, T&MSS will provide technical support, as required, to SNL during the performance of the tasks outlined in this plan.

Sandia National Laboratories (SNL) is responsible for managing, monitoring, controlling, and coordinating the activities of the Project participants involved in the ESF alternatives evaluation study. SNL will monitor and report the progress of the tasks to the Project Office at monthly meetings.

On a technical level, SNL is responsible for: certification of performance assessment computer codes; identification and quantification of design and construction requirements; verification of design inputs; identification of alternative repository options; development of evaluation criteria and methodology; selection of the preferred repository option and selection of the preferred ESF configuration and construction Methods. SNL will use Parsons-Brinckerhoff (PB), the repository underground facilities designer, to assist in the identification of alternative repository options, and support the selection of the preferred ESF option.

Los Alamos National Laboratory (LANL) is responsible for testing strategies including their application and location within the ESF, and will also support the selection of the preferred ESF option. Another major area of responsibility is verification that the preferred ESF configuration and construction methods are suitable for the intended use of this facility. The LANL Test Manager's Office (TMO) at Las Vegas will coordinate development of all test related material with respect to content and schedule, and will participate in the monthly meetings.

Holmes and Narver (H&N) and Fenix Scisson of Nevada (FSN), the ESF Architect Engineer(s) (A/Es), are responsible for the identification of the ESF configuration options and construction methods. The A/Es will also support the selection of the preferred ESF option. This task will involve identification of ESF options for the underground access, connecting drifts and openings, operational support functions, layout of surface facilities, and schedules and cost estimates. Additionally, the A/Es will provide support in their respective areas of expertise as needed, and will participate in the monthly meetings.

Reynolds Electrical and Engineering Company (REECo) will provide expertise in construction and installation techniques and will support the selection of the preferred ESF option, as required. This support will include identification of construction options, schedules, and cost estimates; construction related input to proposed layout configurations; and review and comments on proposed configurations. REECo will also participate in the monthly meetings.

The DOE/HQ Office of Facilities Siting and Development (RW-20) will have the option of (1) attending the monthly meetings as observers, (2) hosting the quarterly status meetings, and (3) participating in reviews. RW-20 will cooperate with the Project Office in the arrangement of any discussions of these studies with the Nuclear Regulatory Commission (NRC) or the Nuclear Waste Technical Review Board (NWTRB).

2.2.2 Organizational Interfaces

SNL will interface with the responsible project participants. During the performance of the assigned tasks, the participating Project organizations will interface with each other as required. Project organizations will interface with each other in accordance with AP-5.19Q, "Interface Control" which has been adopted by SNL as a controlling procedure.

Repository and ESF configurations will be coordinated, where appropriate, with surface based testing requirements and license application strategies.

2.3 Quality Assurance

The work described in this document will be conducted under a 10 CFR 60 Subpart G Quality Assurance Program, as implemented by the Yucca Mountain Project Quality Assurance plan, NNWSI/88-9, Rev. 2. Each participant will define that program as applied to their work by applying AP-5.4Q and AP-5.17Q. The appropriate portions of NNWSI/88-9, determined by the individual participants to be applicable to their work, will apply.

Any quality-affecting software used in the conduct of this work will be developed and controlled under a YMPO approved software QA plan.

Personnel from those participants that do not yet have a qualified QA program will be trained and conduct their activities under the Sandia National Laboratories QA program.

2.4 Task Plans

The participants assigned as technical leads may develop task plans for each task. These plans may include:

1. Purpose and scope.
2. Description of work to be performed.
3. Methods and procedures to be used.
4. Personnel assigned by activity or task.
5. Reports, products and reviews planned.
6. Quality Assurance.
7. Schedule.
8. Resource Requirements

Prior to initiation of technical activities, the task plans shall undergo an independent technical review and a QA review for inclusion of appropriate technical and QA requirements. Approval of the task plans shall be by the Technical Project Officer (TPO) of each organization proposing the work under their own QA program and by the SNL TPO.

2.5 Documentation

Work performed during the implementation of each of the tasks will be documented. The documentation shall provide sufficient detail to permit independent reviewers to comprehend the original determinations.

Documentation shall include the following completed items and sections as applicable:

1. Name of the task for which the work is performed.
2. Objective of the analysis, evaluation, or calculation.
3. Special directions given and by whom.
4. Method of analysis, evaluation, review, or calculation used.
5. Listing of information sources and specific data used.

6. Qualitative statement regarding the degree of uncertainty or maturity of the information sources.

7. Assumptions and their basis (rationale).

8. References (title [including accession number], revision number, author, and date), or other unique identifiers.

9. Special terms used.

10. Constants used.

11. Conclusions.

12. An orderly statement of analysis logic.

13. Authentication by the preparing parties.

2.6 Deliverables

The deliverables to be produced for each specific task will be identified in the task plans.

2.7 Schedule

The preliminary schedule for implementing this plan is contained in Exhibit B. The final schedule shall be developed by SNL before December 1, 1989. The final selection of the preferred ESF option will be available by December 30, 1990.

2.8 Records Management

Records Management will be in accordance with the procedure(s) identified as applicable by SNL.

2.9 Reviews

Independent reviews will be performed as Technical Reviews or Peer Reviews as applicable. Appropriate interim reviews may also be conducted. DOE/HQ will have the option of participating in these reviews.

3.0 DEVELOPMENT OF EVALUATION METHODOLOGY

This task will address the development of the methodology required for the evaluation of the repository and ESF options.

3.1 Evaluation Criteria

This section describes the methods and resources to be used for the development of the evaluation criteria.

3.1.1 Repository Evaluation Criteria

The repository system is divided into subsystems as described in the Repository Design Requirements document. Criteria will be developed for evaluation of the surface to underground access configurations and the repository/ESF interface subsystems. The requirements will be organized according to their hierarchy such that higher-level requirements are satisfied if it can be shown that each individual subordinate requirement is satisfied.

Evaluation criteria for determining whether the individual lower-level requirements are met will be developed for each physical subsystem to which a requirement applies. These criteria will be developed from the performance allocation tables in the SCP, appropriate design requirements documents, and qualitative professional judgment.
In addition to the regulatory criteria, non-regulatory criteria will be developed from the requirements identified in Section 4.0. These criteria will be based on such factors as industrial safety, cost, schedule, constructability, ventilation requirements, long-term drift maintenance, rock disturbance, water minimization, construction methods, and opening stability. These criteria will take into account comments and concerns raised by the NRC, the NWTRB, the State of Nevada, internal DOE reviews, and other sources.

3.1.2 ESF Evaluation Criteria

The development of evaluation criteria for the ESF will proceed in a manner similar to that described above for the repository configuration. A list of relevant ESF requirements will be developed. Comments from the NRC's Site Characterization Analysis (SCA) and testing related criteria will be included in the ESF evaluation criteria.

Additional criteria will be developed, as necessary, based on comments and concerns raised by the NRC, the NWTRB, the State of Nevada, internal DOE reviews, and other sources.

As a minimum, the following factors will be addressed by the ESF evaluation criteria:

1. Potential impacts of an ESF configuration and construction options on the ability of the site to isolate waste following permanent closure of the repository.

2. Potential impacts of an ESF configuration and construction options on radiological and nonradiological health and safety during repository construction, operation, decommissioning, and closure.

3. Ability of an ESF configuration to obtain data needed to design the repository and conduct performance assessments including, the ability to satisfy the requirements of the testing strategies outlined in the SCP, and the ability to obtain sufficient data representative of repository conditions.

4. Flexibility of an ESF configuration to allow performance of new testing not previously identified or described in the SCP (i.e., performance confirmation).

5. Flexibility of an ESF configuration to support modification of the configuration or construction methods during construction in response to conditions encountered, new or modified testing, or other requirements.

6. An ESF configuration's potential for construction-to-testing interference, operations-to-testing interference, and testing-to-testing interference.

7. Compatibility of an ESF configuration and construction options with repository design requirements and the preferred repository configuration.

8. Necessity for prototype testing or surface-based testing prior to design or construction of the ESF.

9. The technical and engineering considerations associated with the configuration and construction methods, including the risks associated with using state-of-the-art or prototype technology; water-usage; penetration rates; requirement for temporary versus permanent ground support; shaft or drift face accessibility; and power requirements.

10. Ability to conduct routine operations (e.g., transporting personnel, muck haulage, ventilation, hoisting, and sampling.)

11. Impacts on cost and schedule related to ESF configurations and construction methods, and to the repository configurations.

3.2 Application of Criteria

Detailed instructions for performing the evaluations of the configurations and construction options will be developed in accordance with the Task Plans and approved by the SNL TPO.

Instructions will be developed for application of the selection criteria to the viable repository and ESF options. The procedures for application of the evaluation criteria to these options will address the following:

1. Selection of the major areas of consideration and identification of their expected percentage of influence.

2. Identification of quantitative and qualitative criteria for each major area of consideration.

3. Development of criteria weighting.

3.3 Deliverables

The proposed deliverables resulting from this task are Chapter 2.0 of the final report and its supporting appendices, as indicated below:

2.0 Evaluation Methodology

- 2.1 Technical Approach
- 2.2 Assumptions
- 2.3 Evaluation Criteria
  - 2.3.1 Repository Evaluation Criteria
  - 2.3.2 ESF Evaluation Criteria
- 2.4 Acceptable Method(s) for Application of Evaluation Criteria
- 2.5 Acceptable Method(s) for Documentation of Results

4.0 EVALUATION OF REPOSITORY AND ESF DESIGN AND CONSTRUCTION REQUIREMENTS

The first part of this evaluation will be a review of existing program requirements documents and all comments and concerns relating to the repository and ESF design and construction. The purpose of this review is to identify those requirements which may impact the selection of the preferred repository access configuration and the ESF configuration and construction methods. Comments and concerns will include, but are not limited to, those raised by the Nuclear Regulatory Commission (NRC), the Nuclear Waste Technical Review Board (NWTRB), the State of Nevada, and the Department of Energy (DOE). This review will culminate in the preparation of two lists of requirements. The first list will contain those requirements impacting the selection of the preferred Yucca Mountain repository option. The second list will contain those requirements impacting the selection of the preferred ESF configuration and construction methods.

The applicable requirements will be reviewed to identify those which shall be quantified or be made site specific. Specific values, based on performance and design-related calculations, evaluations, and trade-off studies, will be established.

The resulting repository and ESF requirements lists will be used to support the evaluation of alternatives for the configuration and construction method. Additional requirements, identified as a result of tasks outlined above, will be incorporated into the existing project requirements documents as part of this ESF evaluations study prior to commencement of design leading to construction.
In parallel with the quantification efforts, SNL will provide traceability (verification) of design inputs.

4.1 Survey of Requirements

This section describes the general process for reviewing existing regulatory requirements and additional comments and concerns to produce a comprehensive list of requirements which are applicable to the repository and ESF design and construction.

4.1.1 Repository Requirements

SNL will perform a detailed review of Title 10 Chapter I Part 60 of the Code of Federal Regulations (10 CFR 60), the Generic Requirements for a Mined Geologic Disposal System -OGR/B2 (GR) and the draft Repository Design Requirements Document (RDR) (which is consistent with the GR) to ensure that the requirements which apply to the selection of the preferred repository access configuration and construction methods and repository/ESF interfaces have been adequately interpreted and translated into requirements. In addition, SNL will review all comments and concerns raised by the NRC, NWTRB, the State of Nevada, the DOE, and others, to ascertain if any of the comments or concerns may affect the repository access and interface requirements. Sources of such comments and concerns may include the NRC's Site Characterization Analysis (SCA), written correspondence received from the NWTRB and the State of Nevada public meetings and hearings, and publicly released reports.
As a result of these reviews, SNL will identify and list the requirements which impact the selection of the preferred repository option. A summary of relevant comments and concerns will also be prepared.

4.1.2 ESF Requirements

SNL, supported by LANL, will perform a document review to ensure that all requirements which the ESF must satisfy are incorporated into the ESF SDRD. Documents to be reviewed will include upper-tier documents such as Appendix E of the GR and the draft RDR. Other documents, as identified in the work plans, will be reviewed for additional requirements which may potentially impact the ESF. The documents to be reviewed will be the latest versions available at the initiation of this task.

DOE will provide guidance as to which 10 CFR 60 requirements may impact the selection of the preferred ESF configuration. These requirements will be identified in an updated GR Appendix E or by guidance letter identifying those additional requirements not contained in the current version of GR Appendix E. The updated GR Appendix E will be approved prior to approval of the final report of this study. A review of comments and concerns raised by the NRC, NWTRB, the State of Nevada, the DOE, and others, will be performed to ascertain if any of the comments or concerns may affect the design and construction of the ESF.

As a result of this review,SNL will identify and list the requirements which impact the selection of the preferred ESF configuration and construction method. A summary of relevant comments and concerns will also be prepared.

4.1.3 Testing Requirements

LANL will assume the lead in performing a document review to identify ESF test requirements, identified in the Site Characterization Plan (SCP) and study plans, which will impact the selection of the preferred ESF configuration and construction method. Specific requirements identified as a result of this effort will be incorporated into the ESF requirements list. Documentation to be reviewed will be identified in the work plans. In addition, LANL will review all comments and concerns raised by the NRC, NWTRB, the State of Nevada and the DOE with respect to testing to ascertain if any of the comments or concerns are applicable to the design and construction of the ESF.

As a result of this review, LANL will identify and list the testing requirements which impact the selection of the preferred ESF configuration and construction method. A summary of relevant comments and concerns will also be prepared. These requirements will be incorporated into the ESF requirements lists identified in Section 4.1.2.

4.2 Quantification of Requirements

Requirements identified in Section 4.1, which are expressed in a qualitative manner, will be reviewed to identify those which shall be assigned specific values. Based on analyses and trade-off studies identified in the work plans, values will be assigned to the identified requirements as necessary.

4.2.1 Repository and ESF Requirements

The requirements applicable to the selection of the preferred repository option and ESF configuration and construction methods will be reviewed by SNL and, where appropriate, be grouped into analysis categories such as thermomechanical, hydrological, geochemical, geotechnical and geological. Each of the categories will be segregated into analysis packages which will address one or more requirement.

Analyses will be performed for each analysis package to quantify the requirement it addresses over a range of alternate conditions that will cover the configurations identified in Section 5.1 and 5.2 and allow trade-off studies to be performed. The range of the input parameters and scope for each analysis will be established to assure that the requirements are adequately investigated.

4.2.2 Testing Requirements

LANL will be the technical lead responsible for quantifying the testing requirements identified in the SDRD. The requirements to be met by the ESF in support of the Integrated Data System (IDS) will also be identified. The requirements developed and quantified by LANL will be verified by the participating test organizations prior to incorporation into the appropriate requirements list.

4.3 Traceability of Repository and ESF Design Input Data

As part of the incorporation of the results of this study into the existing project requirements documents, the traceability of the repository and ESF design input data will be established and documented by SNL.

4.4 Revision of Requirements

As a result of the requirements surveys outlined in Section 4.1, requirements lists to be used in the selection of the preferred repository option and ESF configuration and construction methods will be developed. The RDR and the ESF SDRD will be updated to incorporate additional regulatory requirements as determined by these studies. These documents will then be reviewed, approved, and placed under change control.

4.5 Deliverables

The proposed deliverables resulting from this task are Chapter 3.0 of the final report and its supporting appendices, as indicated below:

3.0 Repository and ESF Design and Construction Requirements

- 3.1 Requirements impacting selection of the preferred repository option.
- 3.2 Requirements impacting the selection of the preferred ESF configuration and construction method(s).

Appendices

1. An appendix documenting the methods and procedures used to identify the requirements and comments and concerns which may impact the selection of the preferred repository option. A list of the requirements will be part of this appendix.

2. An appendix documenting the methods and procedures used to identify the requirements and the comments and concerns which may impact the selection of the preferred ESF configuration and construction method. A list of the requirements will be part of this appendix.

3. An appendix documenting the methods and procedures used to compile a list of quantified requirements which may impact the selection of the preferred repository option.

4. An appendix documenting the methods and procedures used to compile a list of quantified requirements which may impact the selection of the preferred ESF configuration and construction methods.

5. An appendix documenting the methods and procedures used to verify the design inputs which will be used in the evaluation of the preferred options.

6. An appendix identifying the computer codes to be used in the evaluation of the preferred options. The appendix will also identify the steps which were taken to use these codes.

Additional deliverables for this task are the revisions to the project requirements documents as outlined in Section 4.5.

5.0 IDENTIFICATION OF REPOSITORY ACCESS AND ESF OPTIONS

This task will identify repository access options and ESF configuration options and construction methods.

5.1 Repository Access and ESF Options

This section deals with the process of identification of the repository access options and the ESF configuration options and construction methods. This process will involve a literature survey for identification of existing concepts, identification and consideration of comments and concerns, and identification of new concepts.

5.1.1 Literature Survey

A survey of project documents will be conducted to identify those repository options and ESF configuration options and construction methods that have been considered in the past. The Yucca Mountain project documents to be considered may include reports, presentations, white papers, and letters. Document sources may include the project central records facility and the local record facility of the project participants involved with past design efforts.

The Literature Survey documentation will cover previous evaluations of repository layouts and ESF configuration options and construction methods. This will include the scope of the evaluations that were conducted, the methodologies that were used for the evaluations, and the results of the evaluations including recommendations. The QA controls under which the evaluations were conducted will also be reviewed. Guidelines will be developed to determine the quality of the concepts identified in the literature survey. A bibliographic summary of the relevant literature will be provided.

Additionally, the literature survey will identify the repository and ESF related comments, concerns, and issues raised by the NRC, NWTRB, the State of Nevada, and the DOE. This information will also be part of the bibliographic summary.

5.1.2 Identification of New Options

From the literature survey described in Section 5.1.1, specific repository and ESF options may be identified that require refinements. New options may also be identified which will address the more recent comments and concerns expressed by the NRC, NWTRB, the State of Nevada and DOE. The identification of these new options will be documented. Such documentation may include the development of sketches to describe the configuration and construction methods.

5.2 Deliverables

The proposed deliverables resulting from this task are Chapter 4.0 and 5.0 of the final report and their supporting appendices, as indicated below:

4.0 Identification of Alternative Repository Configurations

- 4.1 Repository Options Previously Considered
- 4.2 Repository Related Comments and Concerns
- 4.3 New Configurations and Construction Methods Identified

5.0 Identification of Alternative ESF Configurations and Construction Methods

5.1 ESF Configuration Options and Construction Methods Previously Considered

5.2 ESF Related Comments and Concerns

5.3 New Configurations and Construction Methods Identified

6.0 SELECTION OF PREFERRED CONFIGURATION AND CONSTRUCTION METHODS

This section defines the process for applying the evaluation methodology identified in Section 3.0 to the repository access options and ESF configuration options and construction methods listed in Section 5.0. The evaluation will be performed in two parts: (1) the ranking of the repository options and the selection of the preferred option, and (2) the ranking of ESF configurations and construction methods options and selection of the preferred configuration and construction method. The preferred repository option will then be used as part of the criteria for evaluating ESF configuration options and construction methods.

An evaluation group will be formed to evaluate the repository and ESF options developed in Section 5.0 in accordance with the evaluation methodology developed in Section 3.0. The detail of each of the option packages will be further developed to a level necessary for adequate evaluation. Each option will be depicted by sketches with brief descriptions of the functions and rationale for location of major features in the layout.

The members of the evaluation group shall perform the calculations and screenings necessary to obtain individual ranking component values for the options. The component values will be accumulated and an overall ranking developed for each option. Because this is a somewhat subjective process, each member of the evaluation group will be required to maintain a comprehensive record of all information relevant to the options evaluations, and the evaluation groups will be required to maintain detailed minutes of all meetings. All individual and group records must be made a part of the final record and must be available for independent review subsequent to the completion of these studies.

6.1 Performance Assessment

The performance assessment analysis of the repository and ESF options will at a minimum address the following areas:

1. Waste isolation.

2. Radiological safety.

3. Chemical and fluid transport.

4. Stress fields.

5. Temperature fields.

6. Zones of disturbance.

7. Closure of openings.

Appropriate models for the options will be used. Each model will be analyzed by the appropriate performance assessment techniques and a ranking developed based on the results obtained.

Documentation of performance assessment analyses will include the following:

1. Identification of performance assessment codes if any are used in the analysis.

2. Identification of configuration models to be used.

3. Identification of configuration-related functional design criteria to be used.

4. Development of assumptions for use with the performance codes.

Validation of the performance assessment codes used in the evaluation activities described in this plan will not have been completed when the final reports are prepared. The following paragraphs briefly describe the process applicable to software life cycles for codes that will be used.

Computer codes may be used in many of the analyses performed in evaluating alternative configurations. To ensure that the results of these analyses can be used with confidence, careful attention will be paid to the status of verification and validation of the codes. The procedures that currently govern analyses and software life cycle provide for this attention by calling for certification of codes; the procedures specify in detail how certification is to be achieved. Because all the analyses will follow those procedures, the required attention will be paid to verification and validation.

Briefly stated, the analysis and software procedures require that each analysis be accompanied by a Statement of Software Certification for each piece of Scientific and Engineering Software (SES) used in the analysis. The statement includes a description and review of the status of verification and validation of the piece of software. It explains why the current status is appropriate for the analysis, and it outlines the additional efforts, if any, that must be made to bring the status to a more appropriate level. The statement is reviewed and becomes a part of the analysis records, allowing future reviews and critiques of the analysis to have access to the thinking by which the use of the software was justified.

The procedures require that certification be done in this way because they recognize that verification and validation must be interpreted separately for each problem to which a code is applied. (Validation is the process by which a model is shown to represent correctly the processes it is intended to represent.) Validation of these codes requires data which is not yet available, but will be collected during Site Characterization. Therefore, validation cannot take place until such time as the actual data is available. Each analysis must be accompanied by an assessment of the validity of its models for the intended purposes. The assessment of validity will be a Statement of Analysis-Specific Software Certification, to be prepared for each code for its intended use. The certification will include the following information:

1. The name, version, release number, and qualification status of each piece of Scientific and Engineering Software (SES) to be used in the analysis.

2. An identifying number associated with the analysis (e.g., Problem Definition Memo (PDM) number, Design Investigation Memo (DIM) number), the Work Breakdown Structure (WBS) number, and the extent to which the software is subjected to QA requirements (i.e., Q or Non-Q).

3. Identification of all non-SES calculations, non-calculational software, and auxiliary software used in conjunction with an SES code for the analysis. Such software is included in the certification by reference.

4. A summary of the verification and validation analyses that have been completed and a statement of conclusions drawn from them concerning the adequacy of the code for meeting the objective of the analysis.

5. A summary of additional application-verification and validation activities, if any are needed, including references to current plans for evaluating the adequacy of the code for meeting the objective of the analysis.

6. Tentative plans for efforts to ensure that the results of the analysis will be controlled in such a way that the results of future application-verification and validation work will be compared with the results of this analysis and previous analyses. The intent of such control is to ensure that all analyses are evaluated for the effect of limitations or faults found in subsequent application-verification testing.

7. The basis supporting the certification of the software for the specific physical problem, including reasons why the code, in its present state of development and documentation, is appropriate for the analysis.

6.2 Preferred Repository Option

The evaluation group will review each of the viable repository options and will select the preferred repository access configuration and construction method.

6.3 Preferred ESF Configuration and Construction Methods

The preferred repository option identified in Section 6.2 above shall become part of the evaluation criteria used in the ranking process of the viable ESF configuration options and construction methods. The evaluation group will review each of the viable ESF configuration options and construction methods and list them in order of their ranking. The preferred ESF option will be selected.

6.4 Deliverables

The proposed deliverables resulting from this task are Chapter 6.0 of the final report and its supporting appendices, as indicated below:

6.0 Selection of Preferred Configuration and Construction Method

6.1 Preferred Repository Access Configuration and Construction Method

6.2 Preferred ESF Configuration and Construction Method

Appendices

1. Repository Selection Process Documentation

   a. Repository evaluation group selection process and qualifications.

   b. Report on the performance and results of the repository layouts ranking process and identification of the preferred repository option.

   c. Description of the selected repository access configuration and construction method.

2. ESF Selection Process and Documentation

   a. ESF evaluation group selection process and qualifications.

   b. Report on the performance and results of the ESF layouts and construction options ranking process and identification of the preferred ESF configuration and construction options.

   c. Description of the selected ESF configuration and construction methods.

7.0 REPORTS

The results of the ESF alternative evaluations will be presented in three documents. These documents are: the revised editions of the RDR and the SDRD, and the Alternative Studies Report.

7.1 Revised RDR and SDRD

The revisions for Project requirements documents as identified in Section 4.6 will be incorporated into the RDR and SDRD and the revised documents will be issued in accordance with approved Project procedures.

7.2 Alternatives Study Report Organization, Format and Content

This section outlines the organization, format and content in the final report to be presented to DOE.

7.2.1 Organization and Format

The organization and format of the final report should be in accordance with SNL editorial policies.

7.2.2 Contents of Final Report

The body of the report should consolidate the information, conclusions and recommendations provided by the deliverables that are identified in Sections 3.0, 4.0, 5.0 and 6.0 of the implementation plan. The suggested table of contents for the final report is as follows:

TABLE OF CONTENTS

EXECUTIVE SUMMARY

ACRONYMS AND ABBREVIATIONS

FORWARD

1.0 INTRODUCTION

1.1 Background

1.2 Objectives

1.3 Scope of Study

1.4 Organization of Study

2.0 EVALUATION METHODOLOGY

2.1 Technical Approach

2.2 Assumptions

2.3 Evaluation Criteria

2.3.1 Repository Evaluation Criteria

2.3.2 ESF Evaluation Criteria

2.4 Acceptable Method(s) for Application of Evaluation Criteria

2.5 Acceptable Method(s) for Documentation of Results

3.0 REPOSITORY AND ESF DESIGN AND CONSTRUCTION REQUIREMENTS

3.1 Requirements Impacting Selection of the Preferred Repository Option

3.2 Requirements Impacting the Selection of the Preferred ESF Configuration and Construction Method(s)

4.0 IDENTIFICATION OF ALTERNATIVE REPOSITORY CONFIGURATIONS

4.1 Repository Options Previously Considered

4.2 Repository Related Comments and Concerns

4.3 New Configurations and Construction Methods Identified

5.0 IDENTIFICATION OF ALTERNATIVE ESF CONFIGURATIONS AND CONSTRUCTION METHODS

5.1 ESF Configuration Options and Construction Methods Previously Considered

5.2 ESF Related Comments and Concerns

5.3 New Configurations and Construction Methods Identified

6.0 SELECTION OF PREFERRED CONFIGURATIONS AND CONSTRUCTION METHODS

6.1 Preferred Repository Access Configuration and Construction Method

6.2 Preferred ESF Configuration and Construction Method

7.0 APPENDICES

Appendices shall include, but not be limited to, those identified in Sections 3.0, 4.0, 5.0, and 6.0 of this plan, and this implementation plan.

PLAN ASSIGNMENTS RESPONSIBILITY MATRIX

SECTION	PROJECT MANAGEMENT DIRECTION & INTEGRATION	MANAGEMENT LEAD	TECHNICAL LEAD	SUPPORT INPUT	WBS NO.
2.0 PLAN MANAGEMENT AND IMPLEMENTATION	P.O./T&MSS	SANDIA			
2.1 Management	.....		SANDIA	(T)	1.2.6.1
2.2 Organization	.....		SANDIA	(T,LA,H,F,R)	1.2.6.1
2.2.1 Responsibilities					
2.2.2 Organizational Interfaces					
2.3 Quality Assurance	.....		SANDIA	(P,T)	1.2.6.1
2.4 Work Plans	.....		SANDIA	(T,LA,H,F,R)	1.2.6.1
2.5 Documentation	.....		SANDIA	(TBD)	1.2.6.1
2.6 Deliverables	.....		SANDIA	(TBD)	1.2.6.1
2.7 Schedule	.....		SANDIA	(T,LA,H,F,R)	1.2.6.1
2.8 Records Management	.....		SANDIA	(T,LA,H,F,R)	1.2.6.1
3.0 DEVELOPMENT OF EVALUATION METHODOLOGY	P.O./T&MSS	SANDIA			
3.1 Evaluation Criteria					
3.1.1 Repository Evaluation Criteria	.....		SANDIA	(F,LA,PB)	1.2.1.4
3.1.2 ESF Evaluation Criteria	.....		SANDIA	(F,LA,R)	1.2.6.1
3.2 Application of Criteria					
3.2.1 Quantitative and Qualitative Criteria	.....		SANDIA	(TBD)	1.2.1.4
3.2.2 Performance Assessment	.....		SANDIA	(TBD)	1.2.6.1/1.2.1.4
3.3 Deliverables	.....		SANDIA	(TBD)	1.2.6.1/1.2.1.4

NOTE: 1) P-Project Office T-T&MSS S-SANDIA LA-LOS ALAMOS F-FSN H-H&N R-REECo PB-Parsons Brinckerhoff
2) 1.2.1.4 Systems Performance assessment, 1.2.4.3 Repository Facilities, 1.2.4.7 Repository Design Basis, 1.2.6.1 ESF Management and Integration

EXHIBIT A
30 NOVEMBER 1989

PLAN ASSIGNMENTS RESPONSIBILITY MATRIX

SECTION	PROJECT MANAGEMENT DIRECTION & INTEGRATION	MANAGEMENT LEAD	TECHNICAL LEAD	SUPPORT INPUT	WBS NO.
4.0 EVALUATION OF REPOSITORY AND ESF DESIGN AND CONSTRUCTION REQUIREMENTS	P.O./T&MSS	SANDIA			
4.1 Survey of Requirements					
4.1.1 Repository Requirements	.....		SANDIA	(T,LA,PB)	1.2.4.7
4.1.2 ESF Requirements	.....		SANDIA	(T,LA)	1.2.6.1
4.1.3 Testing Requirements	.....		LOS ALAMOS	(TBD)	1.2.6.1
4.2 Quantification of Requirements					
4.2.1 Repository and ESF Requirements	.....		SANDIA	(LA,F,H,R,PB)	1.2.4.7
4.2.2 Testing Requirements	.....		LOS ALAMOS	(TBD)	1.2.6.1
4.3 Traceability of ESF and Repository Design Input Data	.....		SANDIA	(LA,F,H,R,PB)	1.2.1.4/1.2.6.1
4.4 Revision of Requirements	.....		SANDIA	(T,LA,PB)	1.2.6.1
4.5 Deliverables	.....		SANDIA	(T,LA,F,H,PB)	1.2.6.1
5.0 IDENTIFICATION OF REPOSITORY ACCESS AND ESF OPTIONS	P.O./T&MSS	SANDIA			
5.1 Repository Access and ESF Options					
5.1.1 Literature Survey	.....		SANDIA	(F,H,LA,PB)	1.2.4.3
5.1.2 Identification of New Options	.....		SANDIA	(F,H,LA,PB)	1.2.4.3
5.2 Deliverables	.....		SANDIA	(LA,H,R,S,F,PB)	1.2.6.1

NOTE: 1) P-Project Office T-T&MSS S-SANDIA LA-LOS ALAMOS F-FSN H-H&N R-REECo PB-Parsons Brinckerhoff
2) 1.2.1.4 Systems Performance assessment, 1.2.4.3 Repository Facilities, 1.2.4.7 Repository Design Basis, 1.2.6.1 ESF Management and Integration

EXHIBIT A
30 NOVEMBER 1989

PLAN ASSIGNMENTS RESPONSIBILITY MATRIX

SECTION	PROJECT MANAGEMENT DIRECTION & INTEGRATION	MANAGEMENT LEAD	TECHNICAL LEAD	SUPPORT INPUT	WBS NO.
6.0 SELECTION OF PREFERRED CONFIGURATION AND CONSTRUCTION METHODS	P.O./T&MSS	SANDIA			
6.1 Performance Assessment	.....		SANDIA	(LA,FSN,PB)	1.2.1.4
6.2 Preferred Repository Option	.....		SANDIA	(TBD)	1.2.1.4/1.2.1.3
6.3 Preferred ESF Configuration and Construction Methods	.....		SANDIA	(TBD)	1.2.6.1
6.4 Deliverables	.....		SANDIA	(TBD)	1.2.6.1
7.0 REPORT	P.O./T&MSS	SANDIA			
7.1 Revised RDR and SDRD	.....		SANDIA	(TBD)	1.2.1.4/1.2.6.1
7.2 Alternative Studies Report Organization, Format, and Content	.....		SANDIA	(TBD)	1.2.6.1
7.2.1 Organization and Format					
7.2.2 Contents of Final Report					
EXHIBITS					
A. Responsibility Matrix for Plan	.....		SANDIA	(TBD)	1.2.6.1
B. Implementation Plan Schedule	.....		SANDIA	(TBD)	1.2.6.1

NOTE: 1) P-Project Office T-T&MSS S-SANDIA LA-LOS ALAMOS F-FSN H-H&N R-REECo PB-Parsons Brinckerhoff
2) 1.2.1.4 Systems Performance assessment, 1.2.4.3 Repository Facilities, 1.2.4.7 Repository Design Basis, 1.2.6.1 ESF Management and Integration

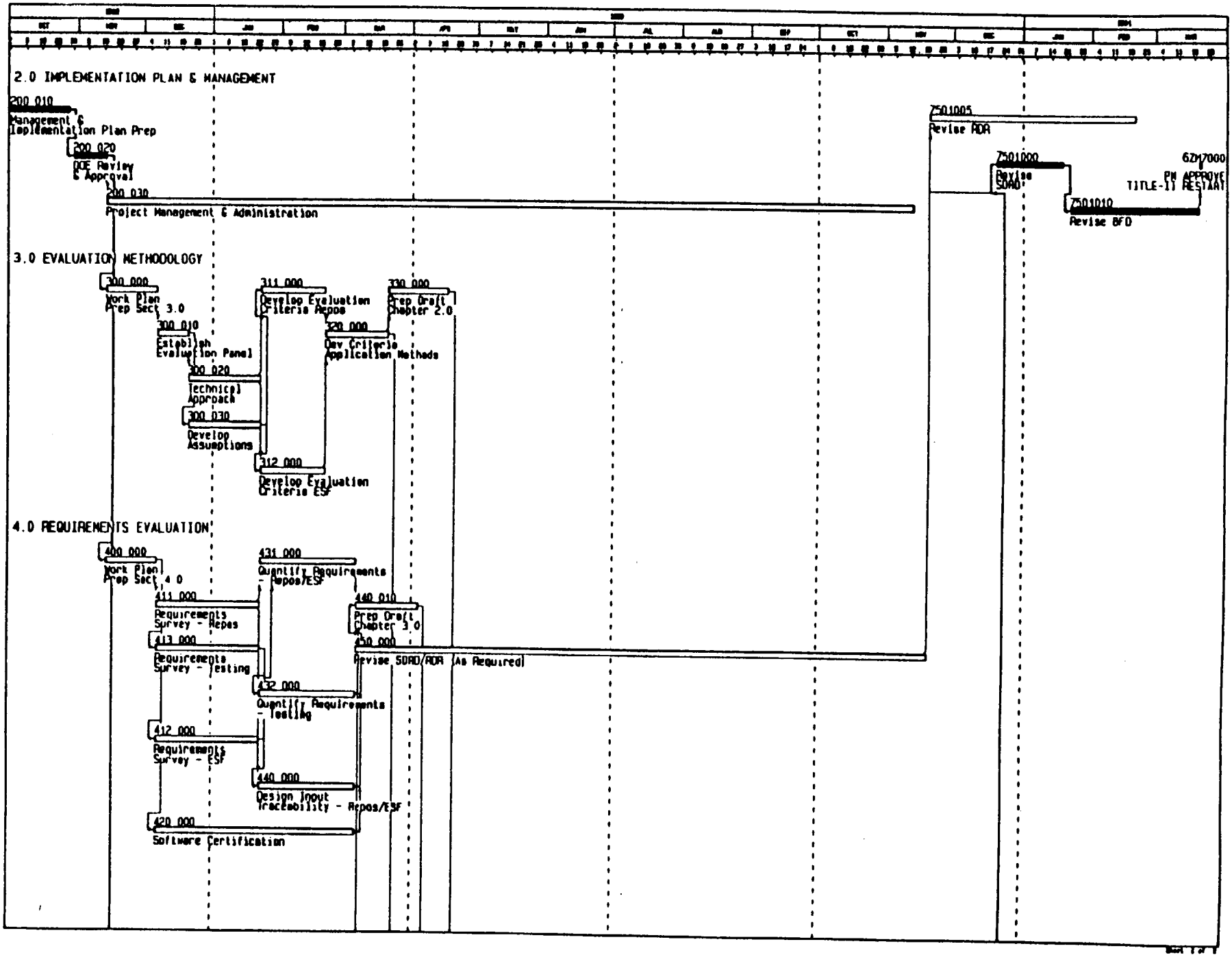

EXHIBIT B
30 NOVEMBER 1989

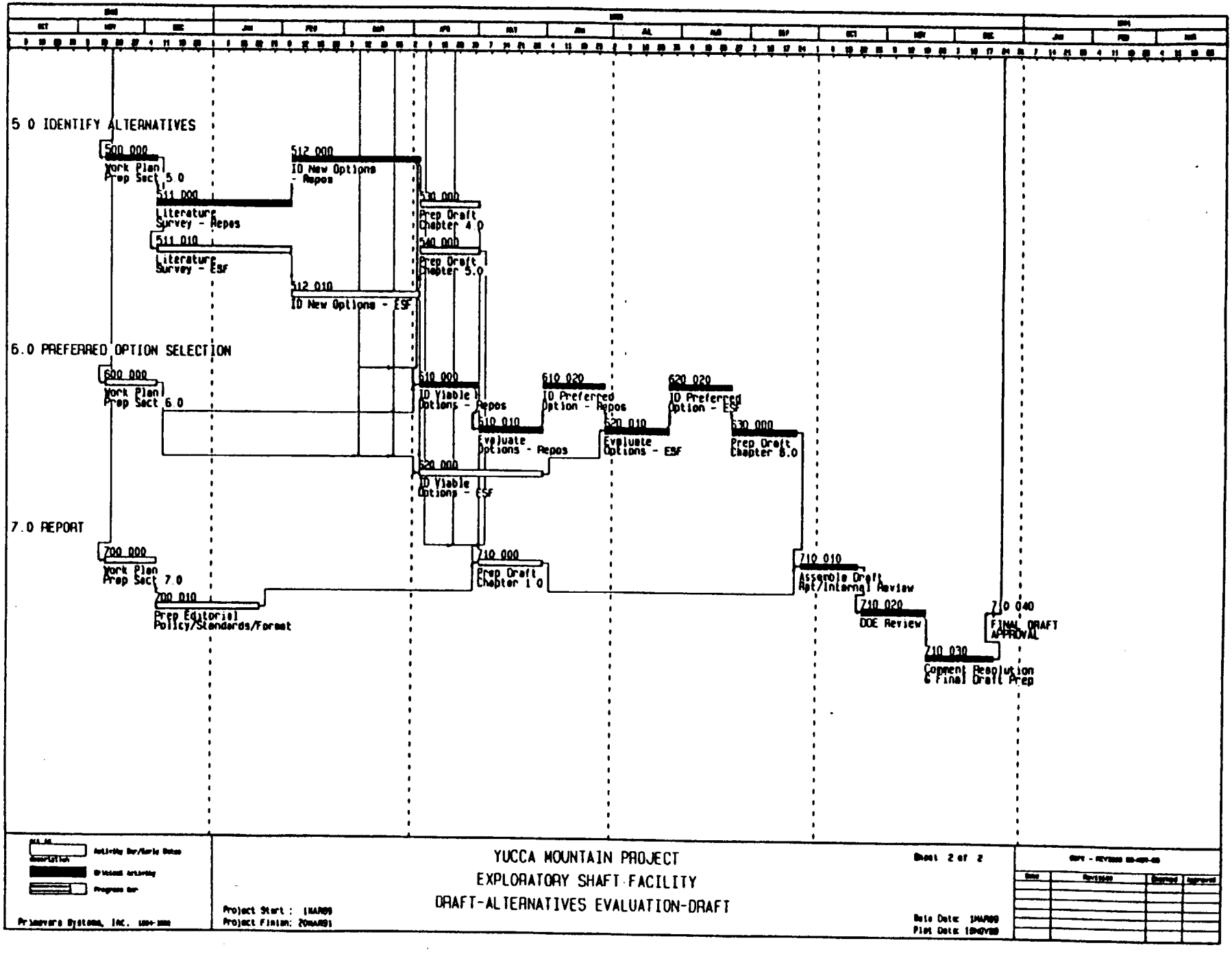

EXHIBIT B
30 NOVEMBER 1989

TPO PRESENTATION

PRESENTED BY

CARL GERTZ
PROJECT MANAGER

DECEMBER 8, 1989

AGENDA

- SITE CHARACTERIZATION PREREQUISITES
- 60-DAY REPORT
- OUTREACH ACTIVITIES

PROJECT MUST MEET PREREQUISITES BEFORE STARTING NEW SURFACE-BASED CHARACTERIZATION ACTIVITIES

- LAND ACCESS (COMPLETED 10/89)
- SCP REVIEW BY NRC (COMPLETED 7/89)
- STUDY PLANS ON TRENCHING IN MIDAY VALLEY AND QUATERNARY REGIONAL HYDROLOGY APPROVED BY NRC (12/89)
- ENDANGERED SPECIES ACT (DESERT TORTOISE-BIOLOGICAL ASSESSMENT SUBMITTED 10/89)
- FULLY QUALIFIED QA PROGRAM ACCEPTED BY NRC FOR WORK TO BE PERFORMED
- ENVIRONMENTAL COMPLIANCE AND PERMITTING

DOE ANNOUNCED NEW STEPS LAST WEEK TO KEEP PROGRAM MOVING FORWARD

- LITIGATE TO RESOLVE PERMIT ISSUE
- REVISE APPROACH AND SCHEDULE
- STREAMLINE MANAGEMENT APPROACH
- SEPARATE LINK BETWEEN MRS AND REPOSITORY

DOE TO SUE STATE OF NEVADA TO OBTAIN APPROPRIATE PERMITS

- DOE HAS TRIED TO WORK WITH STATE; WOULD PREFER COOPERATIVE APPROACH
- PERMITS NEEDED TO START NEW SITE CHARACTERIZATION WORK
  - NEW SCIENTIFIC STUDIES ARE ESSENTIAL TO DETERMINE YUCCA MOUNTAIN'S SUITABILITY
- STATE SAYS RECENT LEGISLATIVE ACTIONS PROHIBIT ISSUANCE OF PERMITS
- LAWSUIT TO BE FILED IN 30 DAYS

REVISED APPROACH AND SCHEDULE ANNOUNCED FOR YUCCA MOUNTAIN CHARACTERIZATION

- NEAR–TERM STUDIES EMPHASIZE SURFACE–BASED ACTIVITIES (TRENCHES, DRILL HOLES)
  - PRIORITIZES WORK TO BE DONE
- SCHEDULE ASSUMES SITE WORK BEGINS IN JANUARY 1991
  - EXPLORATORY SHAFT FACILITY CONSTRUCTION BEGINS NOVEMBER 1992
- IF SUITABLE, REPOSITORY OPERATIONS WOULD BEGIN IN 2010

OCRWM PROGRAM REVIEW

- DELAYS RESULTING FROM EXTENDING DURATIONS OF SITE-CHARACTERIZATION AND REPOSITORY-DEVELOPMENT ACTIVITIES ATTRIBUTABLE TO:
  - UNDERESTIMATION OF IMPACT OF REQUIREMENTS FOR QA AND DESIGN CONTROL ON REPOSITORY SCHEDULE
  - MISPERCEPTION THAT PROGRAM WAS SIMPLY A CONSTRUCTION PROJECT RATHER THAN A FIRST-OF-ITS-KIND SCIENTIFIC ENDEAVOR
- DELAY IN START OF NEW SCIENTIFIC INVESTIGATIONS AT YUCCA MOUNTAIN ATTRIBUTABLE, IN PART, TO:
  - UNWILLINGNESS ON PART OF STATE OF NEVADA TO ALLOW SITE INVESTIGATIONS

YUCCA MOUNTAIN PROJECT OFFICE TO REPORT DIRECTLY TO THE DOE PROGRAM DIRECTOR IN WASHINGTON, D.C.

- PROJECT OFFICE WILL CONTINUE TO COORDINATE CLOSELY WITH NEVADA OPERATIONS OFFICE
- ROLE OF ALL CONTRACTORS WILL BE REVIEWED TO ELIMINATE DUPLICATE WORK
- DOE HOPES NEW DIRECTOR CONFIRMED BY CONGRESS EARLY NEXT YEAR
- DOE WORKING WITH WHITE HOUSE TO NAME NEGOTIATOR

DOE AGREES WITH MONITORED RETRIEVABLE STORAGE (MRS) REVIEW COMMISSION; SEEKS TO SEPARATE LINK BETWEEN MRS AND DEVELOPMENT OF PERMANENT REPOSITORY

- CURRENT LAW SAYS MRS CANNOT BE BUILT UNTIL REPOSITORY CONSTRUCTION LICENSE ISSUED BY NRC
- DOE COMMITTED TO ACCEPT SPENT FUEL IN 1998 AT AN INTERIM STORAGE FACILITY

PROJECT IMPACTED BY REDUCED FISCAL YEAR 1990 FUNDING AND REDEFINED PRIORITIES

- 1990 YUCCA MOUNTAIN BUDGET REDUCED BY 10% - 15%
  - SOME REDUCTIONS/REASSIGNMENTS ANTICIPATED
- MAJOR REPOSITORY AND WASTE PACKAGE STUDIES DEFERRED
- TESTING IN G-TUNNEL SUSPENDED
- CLIMAX TUNNEL CLOSED
- ESF DESIGN WORK STOPPED; ALTERNATE ESF CONCEPTS TO BE STUDIED

OUTREACH ACTIVITIES IN NOVEMBER

- GIRL SCOUTS OF NEVADA
- SOUTHERN NEVADA EXECUTIVE COUNCIL
- NATIONAL ASSOCIATION OF PURCHASING AGENTS OF SOUTHERN NEVADA
- PUBLIC FORUM PANEL AT THE UNIVERSITY OF NEVADA, RENO
- AMERICAN NUCLEAR SOCIETY 1989 WINTER MEETING
- U.S. COUNCIL ON ENERGY AWARENESS PROGRAM COMMITTEE
- SYMPOSIUM IN HONOR OF PROFESSOR THOMAS PIGFORD
- SOUTHERN NEVADA FEDERAL EXECUTIVE ASSOCIATION

UPCOMING INTERACTIONS

- NEVADA COMMISSION ON
  NUCLEAR PROJECTS-DECEMBER 15, 1989

- BLM LAND WITHDRAWAL PUBLIC MEETINGS
  DECEMBER 18, 1989-RENO
  DECEMBER 19, 1989-LAS VEGAS

^{36}Cl STUDIES OF WATER MOVEMENTS FOR THE YUCCA MOUNTAIN PROJECT

EDWARD NORRIS
LOS ALAMOS NATIONAL LABORATORY

YUCCA MOUNTAIN PROJECT
DIRECTOR'S AND TECHNICAL PROJECT OFFICERS' MEETING
LAS VEGAS, NEVADA

NOVEMBER 3, 1989

PURPOSE

CHARACTERIZE WATER MOVEMENTS AT A POTENTIAL HIGH-LEVEL NUCLEAR WASTE REPOSITORY

- INFILTRATION
- PERCOLATION
- FAULT AND FRACTURE FLOW
- HYDROLOGIC FLOW

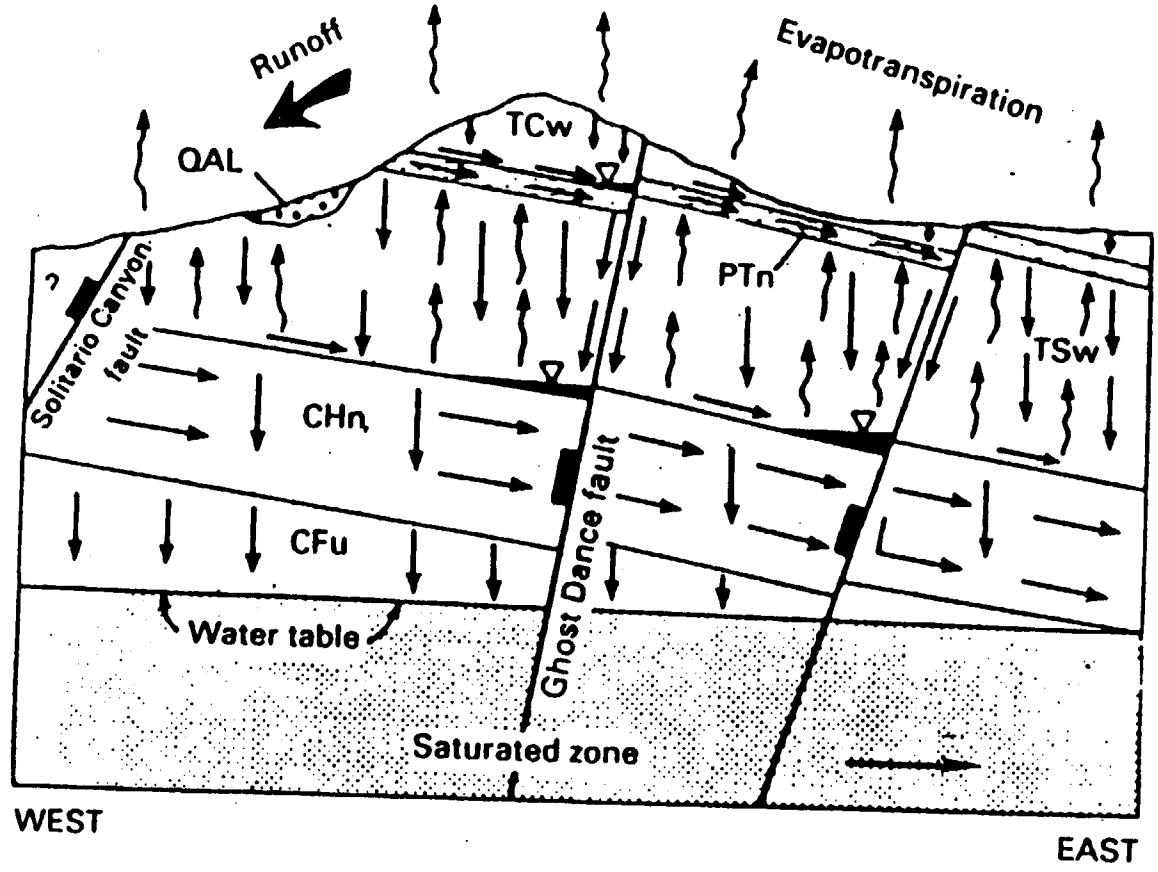

QAL	Alluvium
TCw	Tiva Canyon welded unit
PTn	Paintbrush nonwelded unit
TSw	Topopah Spring welded unit
CHn	Calico Hills nonwelded unit
CFu	Crater Flat (undifferentiated) unit

Liquid-water flow

Water-vapor flow

Normal fault

Possible perched-water zone

CHLORINE CHARACTERISTICS USEFUL FOR TRACING WATER

GEOCHEMICAL FORM IS CHLORIDE

SOLUBLE IN WATER

NONSORBING

NONVOLATILE

^{36}Cl HALF-LIFE IS 3×10^5 yr

QUANTITATIVE ASSAY BY ACCELERATOR MASS SPECTROMETRY

EPIGENE SOURCES OF ^{36}Cl
- COSMOGENIC FALLOUT
- BOMB PULSE FALLOUT

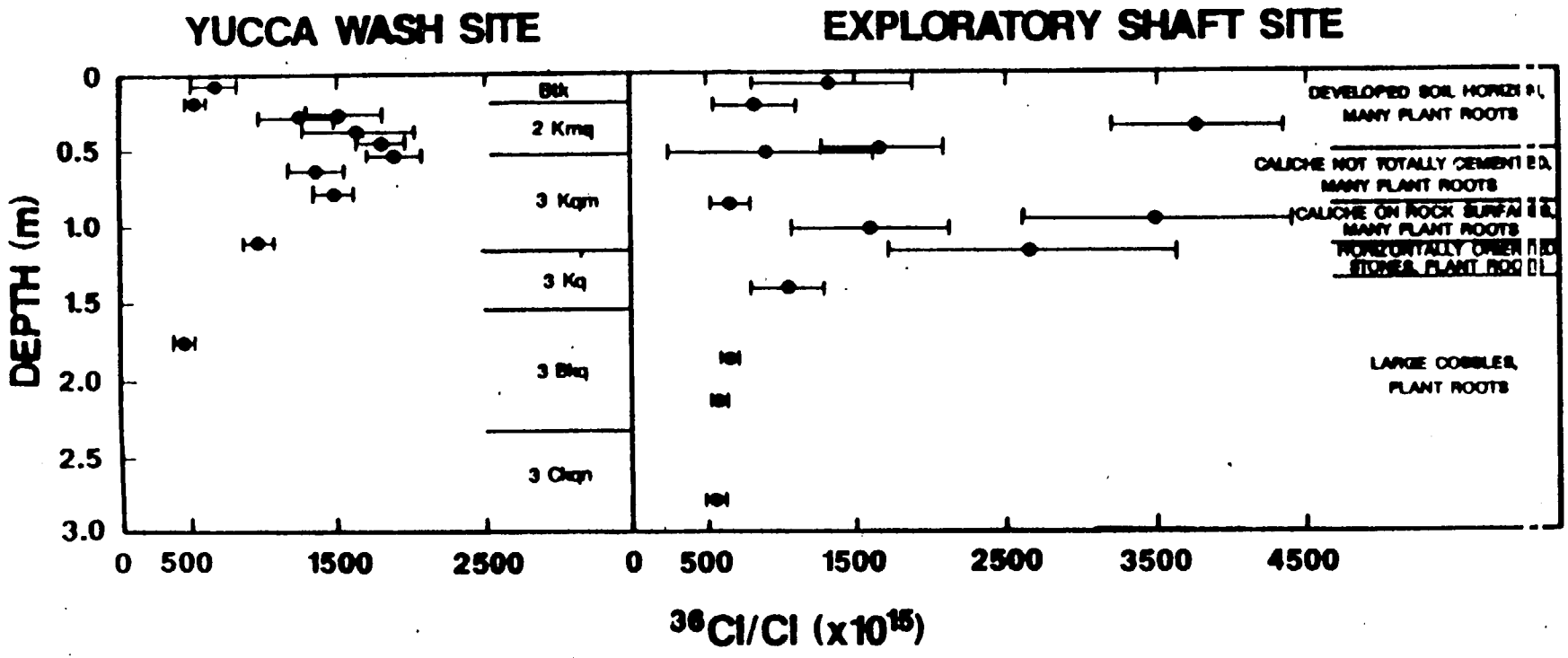
YUCCA WASH SITE
EXPLORATORY SHAFT SITE
DEPTH (m)
0
0.5
1.0
1.5
2.0
2.5
3.0
Bbk
2 Kmq
3 Kqm
3 Kq
3 Bkq
3 Ckqn
DEVELOPED SOIL HORIZON
MANY PLANT ROOTS
CALICHE NOT TOTALLY CEMENTED
MANY PLANT ROOTS
CALICHE ON ROCK SURFACE
MANY PLANT ROOTS
LARGE COBBLES,
PLANT ROOTS
0
500
1500
2500
0
500
1500
2500
3500
4500
36Cl/Cl (x10^15)

INFILTRATION

BOMB PULSE MEASURED AT TWO YUCCA MOUNTAIN SITES

YUCCA WASH

- INFILTRATION RATE 1.8 mm/yr
- BOMB PULSE INTEGRAL $(6 \pm 1) \times 10^{12}$ ATOMS $^{36}Cl/m^2$

COYOTE WASH

- HYDROLOGIC ACTIVITY AFTER BOMB PULSE FALLOUT
- BOMB PULSE INTEGRAL $(4 \pm 2) \times 10^{10}$ ATOMS $^{36}Cl/m^2$

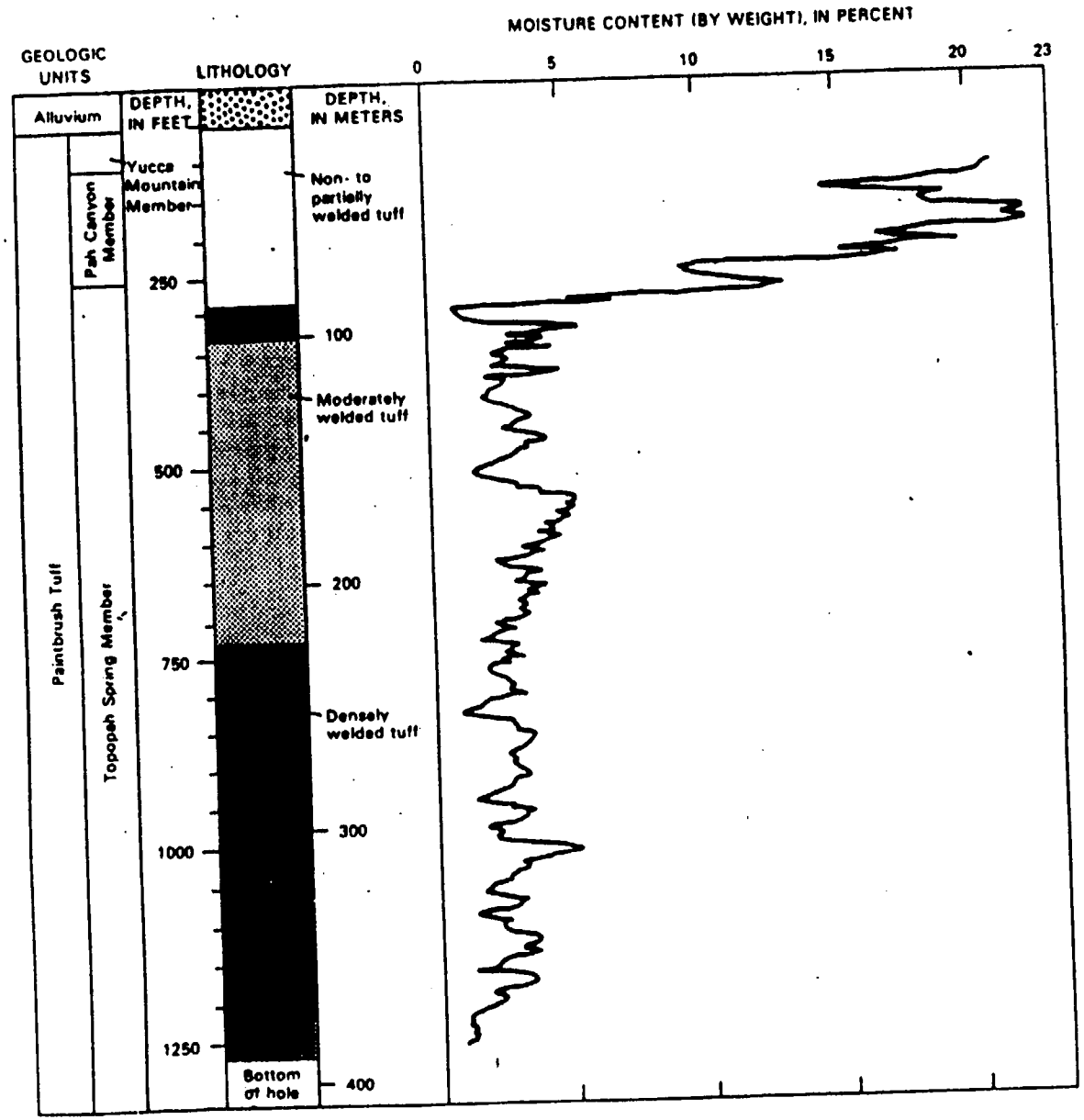
MOISTURE CONTENT (BY WEIGHT), IN PERCENT
0
5
10
15
20
23
GEOLOGIC UNITS
LITHOLOGY
Alluvium
DEPTH, IN FEET
DEPTH, IN METERS
Yucca Mountain Member
Pah Canyon Member
Paintbrush Tuff
Topopah Spring Member
Non- to partially welded tuff
Moderately welded tuff
Densely welded tuff
Bottom of hole
250
500
750
1000
1250
100
200
300
400

PERCOLATION

GOAL:

MEASURE $^{36}Cl/Cl$ IN TUFF AS A FUNCTION OF DEPTH
USE ^{36}Cl HALF-LIFE FOR RATE OF DOWNWARD MOVEMENT

DATA FOUND TO VARY WITH TUFF PARTICLE SIZE:

SAMPLE	SHATTERBOX TIME (min)	$^{36}Cl/Cl$ (x 10^{15})
250-255	0	436 ± 25
250-255A	5	193 ± 7
250-255B	10	91 ± 4
250-255D	15	36 ± 11
250-255E	20	25 ± 5

PERCOLATION

HYPOTHESIS:

METEORIC PLUS HYPOGENE SOURCES OF ^{36}Cl

CURRENT WORK TO SEPARATE SOURCES:

MEASURE $^{36}Cl/Cl$ AND Cl/Br IN TWO SAMPLES FROM SAME DEPTH
- ONE SAMPLE WITH NO SHATTERBOX TIME;
- ONE SAMPLE WITH 3- min SHATTERBOX TIME

FAULT AND FRACTURE FLOW

UZ-1 $^{36}Cl/Cl$ DATA

DEPTH (ft)	$^{36}Cl/Cl$ (x 10^{15})	$^{36}Cl/Cl$ (x10^{15}) (3-min Shatterbox)
97-101	11 400±360	
170-176	2498±198	
250-255	436±25	
395-400	390±48	
495-500	403±42	
500-502	2046±103	1885±150
1020-1025	245±38	159±12
1195-1200	454±61	340±15
1220-1225	102±11	

PLAN VIEW, G-TUNNEL

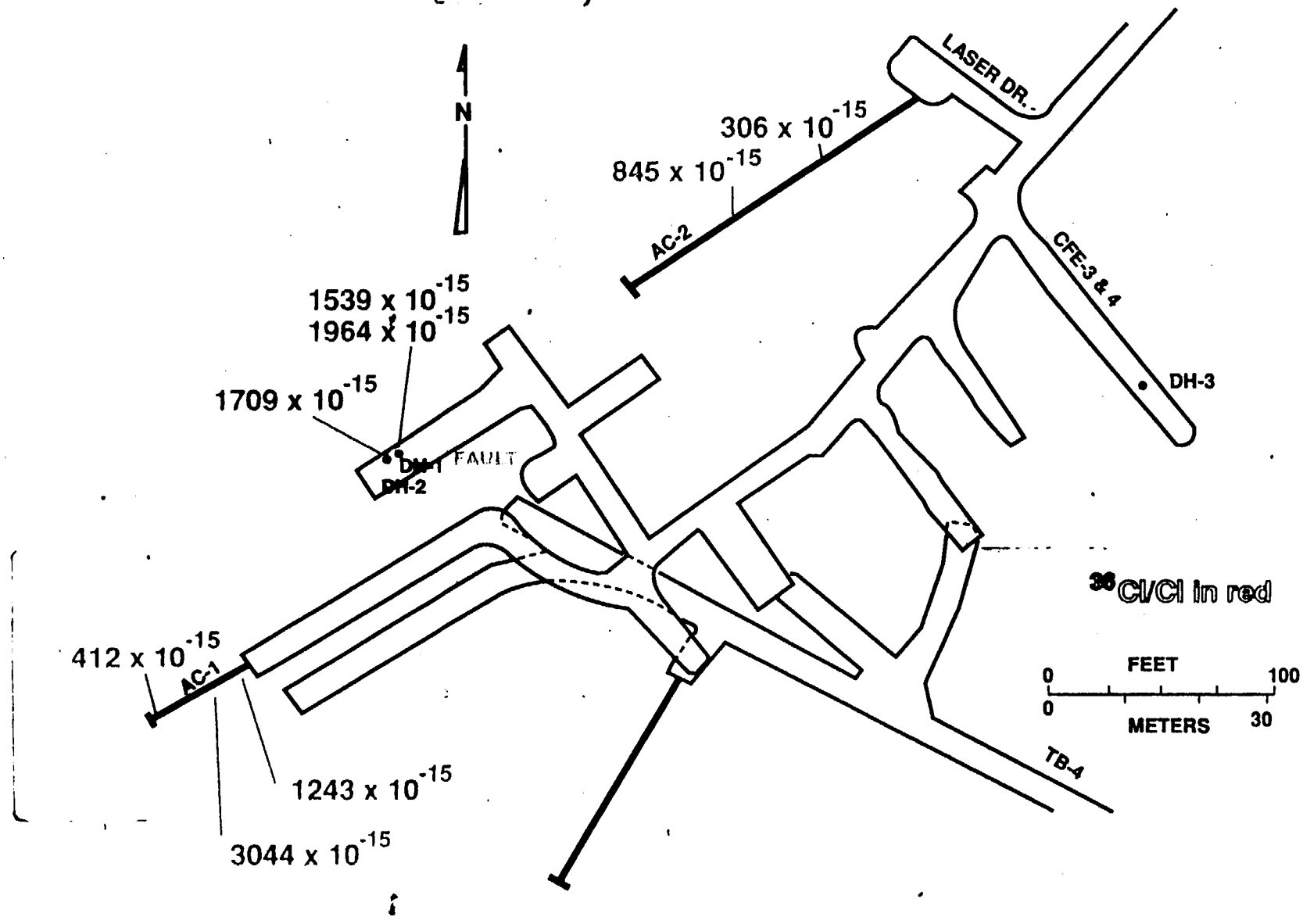

G-TUNNEL, NEVADA TEST SITE

SAMPLE	FEET AND DIRECTION FROM FAULT		$^{36}Cl/Cl$ (x 10^{15})
DH-1	17.4	WEST	1539 ±101
DH-1	17.4	WEST	1964 ±75
DH-2	25.6	WEST	1709 ±70
AC-1	141.4-146.9	WEST	1243±87
AC-1	146.9-155.6	WEST	3044±360
AC-1	183.7-191.4	WEST	412 ±18
AC-2	180.5-189.1	EAST	845 ±76
AC-2	232.5-242.5	EAST	306±22

HYDROLOGIC FLOW

WELL	$^{36}Cl/Cl$ (x 10^{15})
J-13	531±41
USW-H 3	279 ±30
UE-25b#1	370

J-13 WATER APPEARS TO BE CONTEMPORARY. THE OTHER TWO WATER SAMPLES INDICATE THE POSSIBILITY OF ~3 x 10^5 -yr-OLD WATER. $^{36}Cl/Cl$ PROFILES ALONG FLOW PATH ARE NEEDED FOR INTERPRETATION.

INTERACTIONS

YUCCA MOUNTAIN PROJECT

J. CZARNECKI, USGS	REGIONAL HYDROLOGY
P. KAPLAN, SNL	PERFORMANCE ASSESSMENT
B. TRAVIS, LANL	TRACR3D
M. RAY, LANL	AIR CORING TEST

OTHER INTERESTS

B. SCANLON, U.T.	TEXAS LOW-LEVEL NUCLEAR WASTE SITE
T. BEASLEY, DOE/EML	^{36}CI AT INEL

SUMMARY

INFILTRATION

MEASURED RATE OF ~1.8 mm/yr FROM BOMB PULSE

PERCOLATION

^{36}Cl/Cl VARIES WITH PARTICLE SIZE

FAULT AND FRACTURE FLOW

BOMB PULSE DETECTED AT 500 ft BENEATH YUCCA MOUNTAIN AND 1300 ft BENEATH RAINIER MESA

STUDIES OF SOLUTE TRANSPORT MAY BE POSSIBLE IN G-TUNNEL

HYDROLOGIC FLOW

^{36}Cl/Cl PROFILES ALONG FLOW PATH MAY SHOW THAT WATER IN SATURATED ZONE BENEATH YUCCA MOUNTAIN IS OLD

TPO PRESENTATION

PRESENTED BY

CARL GERTZ
PROJECT MANAGER

NOVEMBER 3, 1989

Attachment 2

TPO PRESENTATION

PRESENTED BY

CARL GERTZ
PROJECT MANAGER

NOVEMBER 3, 1989

AGENDA

- ROWR FOR NELLIS RANGE
- BIOLOGICAL ASSESSMENT OF DESERT TORTOISE
- PROTOTYPE DEVELOPMENT PROGRAM
- CURRENT ISSUES
- POSSIBLE SECRETARIAL INITIATIVES
- OUTREACH ACTIVITIES

BUREAU OF LAND MANAGEMENT SIGNED THE RIGHT-OF-WAY RESERVATION (ROWR) FOR THE U.S. AIR FORCE NELLIS RANGE ON OCTOBER 10, 1989

- ROWR ALLOWS YUCCA MOUNTAIN PROJECT ACCESS TO LAND
- DOE HAS NOW COMPLETED ALL LAND ACCESS REQUIREMENTS FOR SITE CHARACTERIZATION ACTIVITIES IN THE YUCCA MOUNTAIN AREA

BIOLOGICAL ASSESSMENT OF THE EFFECTS OF SITE CHARACTERIZATION ACTIVITIES ON THE ENDANGERED DESERT TORTOISE SUBMITTED TO U.S. FISH AND WILDLIFE SERVICE (USF&WS) IN RENO ON OCTOBER 10, 1989

- PROJECT ACTIVITIES IN THE YUCCA MOUNTAIN AREA MAY AFFECT THE DESERT TORTOISE
- PROJECT CONCLUDED THE POTENTIAL EFFECTS WILL BE LIMITED AND NOT THREATEN THE EXISTENCE OF THE SPECIES IN THE AREA
- USF&WS HAS 90 TO 150 DAYS TO ISSUE AN OPINION ON WHETHER THE PROJECT'S PLANS ARE SUFFICIENT TO PROTECT THE TORTOISE

PROTOTYPE DEVELOPMENT PROGRAM

ISSUES OF CURRENT INTEREST

- NEVADA ATTORNEY GENERAL OPINION ON STATE VETO OF REPOSITORY
- AGREEMENT WITH UNIVERSITY OF NEVADA SYSTEM TO DO RESEARCH
- H&N PERSONNEL ISSUES
- MRS COMMISSION REPORT

THE MRS REVIEW COMMISSION WAS CREATED BY CONGRESS IN THE 1987 AMENDMENTS ACT TO DETERMINE WHETHER AN MRS SHOULD BE PART OF THE NATION'S INTEGRATED NUCLEAR WASTE DISPOSAL SYSTEM

- COMMISSION SUPPORTS THE NATIONAL POLICY OF GEOLOGIC DISPOSAL
- COMMISSION RECOMMENDS CONSTRUCTION OF TWO SMALL FACILITIES TO HANDLE WASTE IN EMERGENCY AND INTERIM SITUATIONS
- COMMISSION RECOMMENDS CONGRESS SHOULD LOOK AT INTERIM STORAGE AGAIN BY THE YEAR 2000

MRS REVIEW COMMISSION CONCLUSIONS

- BOTH THE NO-MRS AND MRS OPTIONS ARE SAFE
- THE NET COST OF A WASTE MANAGEMENT SYSTEM WITH AN MRS WOULD BE LOWER THAN PREVIOUSLY ESTIMATED
- NO TECHNICAL BASIS EXISTS THAT WOULD CAUSE THE MRS ALTERNATIVE TO BE CHOSEN IN PREFERENCE TO THE NO-MRS ALTERNATIVE
- DOES NOT RECOMMEND A LINKED MRS AS REQUIRED BY CURRENT LAW AND AS PROPOSED BY DOE
- SOME INTERIM STORAGE FACILITIES ARE IN THE NATIONAL INTEREST TO PROVIDE FOR EMERGENCIES –

MRS REVIEW COMMISSION RECOMMENDATIONS

- CONGRESS AUTHORIZE CONSTRUCTION OF AN EMERGENCY STORAGE FACILITY WITH A CAPACITY LIMIT OF 2,000 MTU
- CONGRESS AUTHORIZE CONSTRUCTION OF A USER-FUNDED INTERIM FACILITY WITH A CAPACITY LIMIT OF 5,000 MTU
- CONGRESS SHOULD RECONSIDER THE SUBJECT OF INTERIM STORAGE BY THE YEAR 2000

POSSIBLE SECRETARIAL INITIATIVES

- RELATIONSHIP WITH WIPP
- DIRECT LINE REPORTING
- INDEPENDENT REVIEW OF MANAGEMENT STRUCTURE
- REVIEW OF SCHEDULE
- EARLY EMPHASIS ON SURFACE BASED TESTING TO IDENTIFY POTENTIALLY ADVERSE CONDITIONS

OUTREACH ACTIVITIES IN OCTOBER

- LAS VEGAS REVIEW JOURNAL EMPLOYEES
- SOUTHERN NEVADA CONTRACTORS' NEWSPAPER EDITORIAL BOARD
- JOINT POWER GENERAL CONFERENCE EDUCATION SEMINAR

OTHER INTERACTIONS

- EDISON ELECTRIC INSTITUTE BRIEFING
- BRITISH BROADCASTING COMPANY (BBC) DOCUMENTARY FILMING

UPCOMING INTERACTIONS

- NEVADA GIRL SCOUTS SCIENCE PROGRAM
- SOUTHERN NEVADA EXECUTIVE COUNCIL
- NATIONAL ASSOCIATION OF PURCHASING AGENTS OF SOUTHERN NEVADA
- PUBLIC FORUM PANEL AT THE UNIVERSITY OF NEVADA, RENO
- PRESENTATION TO NEVADA SCIENCE TEACHERS
- AMERICAN NUCLEAR SOCIETY 1989 WINTER MEETING
- U.S. COUNCIL ON ENERGY AWARENESS PROGRAM COMMITTEE
- BLM MEETINGS (LV AND RENO) ON DOE LAND WITHDRAWAL (NOV. 29 & 30, 1989)

ONGOING STUDY PLANS

STUDY PLANS IN REVIEW CYCLE:

- CHARACTERIZATION OF RUN-OFF AND STREAMFLOW (8.3.1.2.1.2)*
- CHARACTERIZATION OF PERCOLATION IN THE UNSATURATED ZONE (8.3.1.2.2.3)
- CHARACTERIZATION OF GASEOUS-PHASE MOVEMENT IN THE UNSATURATED ZONE (8.3.1.2.2.6)
- HYDROCHEMICAL CHARACTERIZATION OF THE UNSATURATED ZONE (8.3.1.2.2.7)*
- CHARACTERIZATION OF THE SITE SATURATED-ZONE GROUNDWATER FLOW SYSTEM (8.3.1.2.3.1)*
- HISTORY OF MINERALOGIC AND GEOCHEMICAL ALTERATION (8.3.1.3.2.2)
- KINETICS AND THERMODYNAMICS OF MINERAL EVOLUTION (8.3.1.3.3.2)
- CONCEPTUAL MODEL OF MINERAL EVOLUTION (8.3.1.3.3.3)
- BATCH SORPTION STUDIES (8.3.1.3.4.1)
- BIOLOGICAL SORPTION AND TRANSPORT (8.3.1.3.4.2)
- DEVELOPMENT OF SORPTION MODELS (8.3.1.3.4.3)
- DYNAMIC TRANSPORT COLUMN EXPERIMENTS (8.3.1.3.6.1)
- DIFFUSION (8.3.1.3.6.2)
- RETARDATION SENSITIVITY ANALYSIS (8.3.1.3.7.1)
- PALEOENVIRONMENTAL HISTORY (8.3.1.5.1.4)
- PROBABILITY OF VOLCANIC ERUPTION PENETRATING THE REPOSITORY (8.3.1.8.1.1)
- CHARACTERIZATION OF VOLCANIC FEATURES (8.3.1.8.5.1)*
- LABORATORY DETERMINATION OF MECHANICAL PROPERTIES OF FRACTURES (8.3.1.15.1.4)
- CHARACTERIZATION OF FLOOD POTENTIAL (8.3.1.16.1.1)
- HISTORICAL AND CURRENT SEISMICITY (8.3.1.17.4.1)
- QUATERNARY FAULTING (8.3.1.17.4.6)*
- CHARACTERIZATION OF CHEMICAL AND MINERALOGICAL CHANGES IN THE POSTEMPLACEMENT ENVIRONMENT (8.3.4.2.4.1)
- HYDROLOGIC PROPERTIES OF THE WASTE PACKAGE ENVIRONMENT (8.3.4.2.4.2)

STUDY PLANS APPROVED AND SENT TO THE NRC:

- WATER MOVEMENT TRACER TESTS (8.3.1.2.2.2)
- MINERALOGY, PETROLOGY, AND CHEMISTRY ALONG TRANSPORT PATHWAYS (8.3.1.3.2.1)
- CHARACTERIZATION OF STRUCTURAL FEATURES (8.3.1.4.2.2)*
- CHARACTERIZATION OF QUATERNARY REGIONAL HYDROLOGY (8.3.1.5.2.1)*
- LOCATION AND RECENCY OF FAULTING (IN MIDWAY VALLEY) (8.3.1.17.4.2)*
- Excavation Investigation

STUDY PLANS TO BE DEVELOPED:

- CHARACTERIZATION OF METEOROLOGY FOR REGIONAL HYDROLOGY (8.3.1.2.1.1)*
- CHARACTERIZATION OF THE GROUND-WATER FLOW SYSTEM (8.3.1.2.1.3)
- CHARACTERIZATION OF UNSATURATED-ZONE INFILTRATION (8.3.1.2.2.1)
- DISSOLVED SPECIES CONCENTRATION LIMITS (8.3.1.3.5.1)
- COLLOID BEHAVIOR (8.3.1.3.5.2)
- EFFECTS OF VOLCANIC ERUPTION PENETRATING THE REPOSITORY (8.3.1.8.1.2)
- UNDERGROUND NUCLEAR EXPLOSION SOURCES (8.3.1.17.3.2)
- GEODETIC LEVELING (8.3.1.17.4.10)

* CONTAINS NON-SURFACE DISTURBING FIELD ACTIVITIES

STRAWMAN LIST OF PRIORITY STUDY PLANS (NON-ONGOING) CONTAINING NON-SURFACE DISTURBING FIELD ACTIVITIES

- CHARACTERIZATION OF SATURATED ZONE HYDROCHEMISTRY (8.3.1.2.3.2)
- CHARACTERIZATION OF VERTICAL AND LATERAL DISTRIBUTION OF STRATIGRAPHIC UNITS (8.3.1.4.2.1)

NOTE: BOTH OF THESE STUDY PLANS NEED TO BE DEVELOPED

NWTRB PRESENTATION
DETAILED AGENDA
DECEMBER 11–12, 1989

MONDAY, DECEMBER 11, 1989

8:30	INTRODUCTION AND OPENING REMARKS	MAXWELL B. BLANCHARD, DOE
9:00	CHARACTERIZATION OF INFILTRATION	DR. ALAN FLINT, USGS
	• CONCEPTUAL MODEL OF INFILTRATION • CURRENT UNDERSTANDING • FUTURE PLANS	
10:30	BREAK	
10:45	MEASUREMENT OF UNSATURATED ZONE HYDROLOGIC PROPERTIES	
	• OVERVIEW OF MATRIX PROPERTIES	DR. ALAN FLINT, USGS
	• AIR PERMEABILITY TESTING – ROLE OF FRACTURES	ROBERT C. TRAUTZ, USGS
	• IN SITU MONITORING — MEASURING FLUID-FLOW POTENTIAL FIELD	JOSEPH P. ROUSSEAU, USGS
11:45	LUNCH	

NWTRB PRESENTATION
DETAILED AGENDA
DECEMBER 11–12, 1989

MONDAY, DECEMBER 11, 1989 (CONTINUED)

12:45 IMPORTANCE OF FRACTURE VS. MATRIX FLOW

- CONCEPTUAL MODELS FOR FRACTURE/ MATRIX FLOW — PAUL G. KAPLAN, SNL
- RESULTS AND IMPLICATIONS OF EXPERIMENTAL STUDIES AND FIELD OBSERVATIONS
  - CHLORINE ISOTOPIC MEASUREMENTS — DR. A. EDWARD NORRIS, LANL
  - OBSERVATIONS CONCERNING AIR FLOW AND WATER FLOW IN FRACTURES — EDWIN P. WEEKS, USGS

2:30 RADIONUCLIDE GAS RELEASES

- REVIEW OF GASEOUS ISOTOPES — RICHARD A. VAN KONYNENBURG, LLNL
- PRELIMINARY STATUS OF CARBON-14 MODELING — DR. BEN ROSS, DISPOSAL SAFETY INC.
  - CARBON-14 MIGRATION
  - CHEMISTRY MODELING
  - GAS-FLOW MODELING

NWTRB PRESENTATION
DETAILED AGENDA
DECEMBER 11–12, 1989

MONDAY, DECEMBER 11, 1989 (CONTINUED)

3:30 BREAK

3:45 OVERVIEW OF MODEL VALIDATION STRATEGY -- BUILDING "REASONABLE ASSURANCE" — DR. DWIGHT HOXIE, USGS

- RECORD OF MODEL DEVELOPMENT
- LAB/FIELD INVESTIGATIONS
- SENSITIVITY AND UNCERTAINTY ANALYSES
- FORMAL TECHNICAL REVIEWS
- EXAMPLES OF VALIDATION

5:00 WRAP–UP & ADJOURN

NWTRB PRESENTATION
DETAILED AGENDA
DECEMBER 11–12, 1989

TUESDAY, DECEMBER 12, 1989

8:30 APPLICABILITY OF LABORATORY EXPERIMENTS — DR. AREND MEIJER, LANL; DR. ROBERT S. RUNDBERG, LANL

- PHYSICAL AND CHEMICAL PROCESSES DETERMINING MOBILITY
- FACTORS CONTROLLING SORPTIVE BEHAVIOR
- EXPERIMENTAL K_D DETERMINATION – CRUSHED ROCK AND ROCK COLUMN EXPERIMENTS

10:30 BREAK

10:45 OVERVIEW OF EFFECTS OF REPOSITORY DEVELOPMENT — DR. WILLIAM E. GLASSLEY, LLNL

- LABORATORY AND FIELD EVIDENCE: THERMO–HYDROLOGICAL, MECHANICAL, AND GEOCHEMICAL EFFECTS OF REPOSITORY DEVELOPMENT (NEAR- AND FAR–FIELD)
- RADIONUCLIDE BEHAVIOR AT ELEVATED TEMPERATURES; COLLOID BEHAVIOR — DR. DAVID E. HOBART, LANL

11:45 ADJOURN

Los Alamos National Laboratory

MONTHLY STATUS REPORT
OCTOBER 1989

1.2.1 SYSTEMS

MAJOR ACCOMPLISHMENTS:

The Technical Data Advisory Group meeting was hosted by Los Alamos on October 26, 1989. Action items and participant concerns were discussed in the morning session. The afternoon session consisted of a tour of the mineralogy and petrology task facilities, which included a demonstration of data collection, documentation, and reporting for the fracture mineralogy activity.

1.2.3.2 GEOLOGY

MAJOR ACCOMPLISHMENTS:

A data file was started for chain-structure clays relevant to the involvement of clay minerals along potential transport pathways at Yucca Mountain. Studies of these minerals will help to tie together the transport pathways and alteration history/hydrogenic deposit investigations.

An informational presentation on volcanism studies was made at the DOE/NRC meeting on the tectonics program in Las Vegas on October 31. The volcanism staff also attended the scientific workshop convened by the USGS in Death Valley the week of October 23.

Major element analyses were obtained on tephra from the Lathrop Wells volcanic center using x-ray fluorescence spectroscopy (XRF).
Samples were selected from material on hand for K/Ar dating. A report on the feasibility of Ar/Ar and Rb/Sr dating of Yucca Mountain clays is in draft form.

PLANNED WORK:

Statistical methods development, especially the development of tools for handling compositional data.

Evaluation of trace-mineral separates from tuff samples at Yucca Mountain.

A two-day field trip with a subcommittee of the Nuclear Waste Technical Review Board has been confirmed for November 20-21.

Ongoing work includes the preparation of samples for K/Ar dating and characterization of hydrogenic deposit samples. A joint hydrogenic deposits samples collection trip with the USGS is tentatively planned for the end of November. At that time, the natural radiation dosimeters placed at Trench 14 and Busted Butte in August (for electron spin resonance dating) will be removed.

PROBLEM AREAS:

None.

1.2.3.3 HYDROLOGY

MAJOR ACCOMPLISHMENTS:

An addendum to the Prototype Diffusion Test Criteria Letter was completed to cover the work at G-Tunnel that is required to air core six additional 200-foot holes.

PLANNED WORK:

The sites for the first two 200-foot air-cored holes in G-Tunnel will be selected next month during a trip to the Nevada Test Site.

PROBLEM AREAS:

None.

1.2.3.4 GEOCHEMISTRY

MAJOR ACCOMPLISHMENTS:

The americium (Am) sorption experiments were completed. A rather high sorption coefficient for Am on the manganese oxide romanechite indicates that this type of oxide will be a "key mineral" for Am sorption in rock units such as those found in Yucca Mountain.

The solubility task reports that the solubility experiments for Np(V), Pu(IV), and Am(III) in UE-25p #1 groundwater at 25 degrees C and pH values 6, 7, and 8.5 are completed. The large-frame argon ion laser system (Spectra Physics Model 2045) has been delivered and partially installed in support of photothermal spectroscopy applications of the speciation activity.

The 2-dimensional version of CTCN (colloid transport code) is fully operational. Animated color graphics capabilities were developed to visualize the migration of radionuclide plumes calculated with TRACRN. Further 3-dimensional transport calculations are being run with TRACRN to study the effects of spatial variability in sorption coefficient. The grid representing the stratigraphy was corrected to develop a more realistic flow field.

The size of Pu(IV) colloids has been analyzed using autocorrelation photon spectroscopy (APS). The most probable diameters of Pu colloids prepared by dilution, peptization, and oxidation of Pu(III) have been obtained. The APS analysis of the Pu colloids in J-13 water was unsuccessful. The reason for the failure of the analysis could be the formation of very large pseudocolloids outside the range of the APS system.

SIGNIFICANT MEETINGS:

The principal investigator for the Solubility task attended the ACTINIDES-89 Conference in Tashkent, USSR.

PLANNED WORK:

Team members of the Retardation Sensitivity Analysis Study are addressing comments received on the Study Plan. A comment resolution meeting is not yet scheduled.

A draft report on phase one of the scoping calculations for geochemistry field test designs will be completed.

Continue the water/rock ratio experiments and the transport work with pure minerals. Also prepare and analyze Pu colloids in synthetic groundwaters (with the same chemical composition as J-13 water but without the particulate impurities).

PROBLEM AREAS:

None.

1.2.5 REGULATORY AND INSTITUTIONAL

MAJOR ACCOMPLISHMENTS:

Site Characterization Plan (SCP)

A meeting of the Integration Group on the approach to resolving the Nuclear Regulatory Commission comments on the SCP was held. The comments have been distributed to affected principal investigators for comment resolution.

Semi-annual Progress Report

The Los Alamos biannual status report (BSR) was prepared, reviewed, and submitted to the Project Office for inclusion in the Project BSR.

Study Plans

Study Plan 8.3.1.8.1.1, Probability of a Volcanic Eruption Penetrating the Repository. A comment resolution meeting was held in Las Vegas.

PROBLEM AREAS:

None.

1.2.6 EXPLORATORY SHAFT

MAJOR ACCOMPLISHMENTS:

Participated in developing an implementation plan for the Exploratory Shaft Facility alternate study.

EG&G submitted a draft IDS activity plan.

F. Ross Oblad joined Los Alamos to support the IDS design activities.

SIGNIFICANT MEETINGS:

Scheduled and managed the Exploratory Shaft Test Coordination Committee meeting at Los Alamos on October 12.

PLANNED WORK:

The last Los Alamos ongoing study plan will be submitted to the Project Office in November. An interaction with the Nuclear Waste Technology Review Board (NWTRB) is planned for December 11 and 12, 1989, and the topic will be geochemistry.

PROBLEM AREAS:

None.

1.2.9 PROJECT MANAGEMENT

PLANNED WORK:

Los Alamos will participate in the Project Office Audit No. 89-7 in an effort to achieve a fully qualified quality assurance program.

ATTACHMENT 3

News Release #89-48
November 1, 1989
FOR IMMEDIATE RELEASE

For More Information Contact:
Sandra Chereb: 702/687-4170

STATE OF NEVADA
OFFICE OF THE ATTORNEY GENERAL
Capitol Complex
Carson City, Nevada 89710
(702) 687-4170

BRIAN McKAY
Attorney General

AJR 4, AJR 6, CONSTITUTE NOTICE OF DISAPPROVAL OF

YUCCA MOUNTAIN SITE, McKAY SAYS

Carson City -- The State of Nevada is legally justified in rejecting a high-level nuclear waste repository at Yucca Mountain on grounds of economic and environmental endangerment, which the 1989 Legislature did with the adoption of Assembly Joint Resolution 4 and Assembly Joint Resolution 6, Attorney General Brian McKay said.

In a 20-page legal opinion issued today, McKay said the resolutions "...both individually and together express the Legislature's will with respect to either the constitutional or statutory basis for rejection of the federal repository in Nevada" as allowable under Section 116(b) of the Nuclear Waste Policy Act.

And because Congress has not responded to the state's notice of disapproval of the Yucca Mountain site within the 90 day limit set by federal law, the State can presume "...that the Yucca Mountain site is disapproved by Congress and shall not be considered for development as a repository."

(over)

In view of the fact that the site is deemed "disapproved," McKay advised that state agencies considering environmental permits for the Department of Energy to conduct studies at the site should regard the applications as moot and further action unnecessary.

# # #

BRIAN McKAY
Attorney General

STATE OF NEVADA

HARRY W. SWAINSTON
Deputy Attorney General

OFFICE OF THE ATTORNEY GENERAL
NEVADA AGENCY FOR NUCLEAR PROJECTS
Capitol Complex
Evergreen Center
1802 North Carson St., Suite 252
Carson City, Nevada 89710
(702) 885-3866

November 1, 1989

The Honorable Robert Miller
Governor of the State of Nevada
Capitol Building
Carson City, Nevada 89710

Dear Governor Miller:

You have requested an opinion from the Attorney General concerning the legal implications for Nevada's permitting agencies who are considering applications filed by the Department of Energy for environmental permits attending Congress' failure to act after receiving the State's notice of disapproval of the selection of Yucca Mountain as a high-level radioactive repository site. We have taken the liberty to couch your request into the following question:

QUESTION

Given that Nevada has submitted a "notice of disapproval" pursuant to Section 116(b) of the Nuclear Waste Policy Act of 1982 as amended and that Congress has not enacted, within 90 days of continuous session, a "joint resolution of repository siting approval" pursuant to Section 115 (c), should the applications for a permit for the appropriation of water, for an air quality surface disturbance permit and for an underground injection control (UIC) permit for tracer tests, which were filed by the Department of Energy with State agencies for site characterization purposes, be addressed in a manner other than upon their merits as is customarily prescribed by the statutes which govern the permitting authority of the State Engineer and the Division of Environmental Protection?

FACTUAL BACKGROUND

A. The Federal Action

On February 2, 1983, the Secretary of Energy designated nine sites in six states pursuant to Section 116(a), 42 U.S.C. 10136(a), of the Nuclear Waste Policy Act of 1982 (NWPA), 42 U.S.C. 10101 et seq., as potentially acceptable sites for a federally constructed high-level radioactive waste repository. On May 28, 1986, the Secretary nominated five sites, one each in Mississippi, Texas, Utah, Washington and Nevada as suitable for characterization. See 51 Federal Register 19783. He also selected the sites in Texas, Washington and Nevada for actual characterization, pursuant to Section 112(b)(1)(B), 42 U.S.C. 10132(b)(1)(B), and made a preliminary determination that the three sites were suitable for development as repositories pursuant to Section 114(f), 42 U.S.C. 10134(f), consistent with the guidelines promulgated under Section 112(a), 42 U.S.C. 10132(a). At the same time he bowed to political pressure from the eastern states that had potentially acceptable granite sites and, contrary to Section 112, indefinitely postponed the search for a second repository site.

On December 15, 1987 conferees from the House of Representatives and the Senate met and agreed to substantively redirect the nuclear waste program by selecting Yucca Mountain, Nevada, as the sole site to be characterized, thus abandoning the site selection methodology prescribed in the Nuclear Waste Policy Act. The extensive amendments are contained in Title V of the Budget Reconciliation Act, Public Law 100-203, referred to as the Nuclear Waste Policy Amendments Act of 1987 (Amendments Act). No Nevada representatives were included in any of the conference committee discussions. In this milieu of political isolation Nevada was selected to shoulder the entire burden of a highly toxic waste disposal facility no other State wanted.[1]

In anticipation of site characterization, the Department of Energy issued its Site Characterization Plan on December 28, 1988, a nine-volume report describing the anticipated activities underlying its proposed investigation to determine whether Yucca Mountain is suitable for the development of a repository. In order for site characterization to proceed, it was necessary for the DOE to obtain a variety of land use, natural resource, and environmental permits and approvals from both federal and state agencies. On January 20, 1988 the Department applied for an Air Quality Surface Disturbance Permit to the Division of Environmental

---

[1] It is fair to say that Nevada "was singled out in a way that left it politically isolated and powerless." South Carolina v. Baker, ___ U.S. ___ 108 S. Ct. 1355,1361 (1988).

Protection pursuant to Nevada Administrative Code provisions NAC 445.430 through NAC 445.995.[2]

On October 18, 1988 the Department of Energy filed an amended application (No. 52338) with the State Engineer for a water permit to appropriate water for site characterization purposes. The application was subsequently protested by the United States Park Service and Robert Loux, the Executive Director of the Nuclear Waste Project Office. The Attorney General petitioned the State Engineer for intervention in the proceeding on behalf of the State of Nevada and the Nuclear Waste Project Office. On October 10, 1989 the petition was granted. As a result of the protests, an administrative hearing may be held in advance of any action by the State Engineer on the application. See NRS 533.365, 533.375.

On April 6, 1989 the Department of Energy filed an application for an underground injection control (UIC) permit for tracer tests at the C-hole complex at Yucca Mountain in connection with site characterization.[3]

B. The State Response

It would unduly extend the length of this opinion if we were to address in any detail the substantial level of legislative activity in Nevada which preceded the plain and unequivocal policy statement contained in AJR 4 and AJR 6.[4] Suffice it to

---

[2] The Nevada Legislature has declared that it is the public policy of the State of Nevada and the purpose of NRS 445.401 to 445.601 "to achieve and maintain levels of air quality which will protect human health and safety, prevent injury to plant and animal life, prevent damage to property, and preserve visibility and scenic, aesthetic, and historic values of the state." NRS 445.401(1). The quality of air is declared to be affected with the public interest, and NRS 445.401 to 445.601, inclusive, are enacted in the exercise of the police power of this state to protect the health, peace, safety and general welfare of its people." NRS 445.401(3).

Nevada Administrative Code ("NAC") Sections 445.430 through 445.995 are the regulations which have been promulgated to carry out the objectives of NRS 445.401 to 445.601. These regulations set forth the prerequisites for obtaining a permit to construct. (See particularly NAC 445.704 through 445.710).

On March 7, 1989, we advised you by letter opinion, dated March 7, 1989, that:

"...the air quality permit is subject to [NMPA] Section 113 site characterization requirements including the public comment period. Because the public comments may affect the final site characterization plan, a delay in consideration of the air quality permit at least until April 15, 1989 is appropriate."

The public comment period was extended to June 1, 1989, and presumably, in the absence of the policy direction by the 1989 Nevada Legislature, the air permit would be ripe for consideration.

[3] The State of Nevada's Underground Injection Control (UIC) program has been approved by the Environmental Protection Agency. See 53 Fed. Reg. 39088, dated October 5, 1988.

[4] The following bills relating to the high-level radioactive waste repository program were introduced in the sessions for the years indicated:

1983: AJR 11, AJR 34, and SCR 52
1985: AJR 4, AJR 5, AJR 7, SB 55, SB 56, SB 67
1987: AJR 4, AJR 8, AJR 9, AJR 12, AJR 16, AJR 20, ACR 8, SJR 4, SJR 5, SJR 21, AB 756, AB 793,

say that between its sessions in 1983 and 1989 the Legislature has gone from uncommitted to adamantly opposed to the siting of the proposed repository.[5] It is reasonable to assume that the change in position reflects in significant part the attitude of the majority of the citizens of the State in the aftermath of the December 1987 Amendments to the NWPA which singled out the State of Nevada's site at Yucca Mountain as the only one in the nation to be considered for development as the nation's first high-level nuclear waste repository.

The Attorney General, in anticipation of the 1989 Legislative session, was concerned that self-serving arrangements between the DOE and State instrumentalities and political subdivisions of the State, when viewed collectively, may produce a pattern of consensual involvement which may jeopardize the Legislature's right to object to the repository and hamper vindication of that right in the courts. See letter opinion addressed to Robert Loux, Executive Director, Agency for Nuclear Projects/Nuclear Waste Project Office, dated September 22, 1988. In particular the Attorney General advised against actions which could be construed by the courts as an "implied consent" and thereby upstage the Legislature's policy determination. As the opinion stated:

> "We are primarily interested in assuring that the governmental processes leading to an expression or withholding of consent are recognized and followed without regard to the actual decision that the Legislature may reach on the consent issue."

As the 1989 Legislative session unfolded it was apparent that the Legislature and the Executive were unified in opposition to the repository. The stated purpose of the bills which passed and the inference attending those that failed was to send a clear signal to Congress that the State of Nevada was "adamantly opposed" to the repository.[6]

The September 22, 1988 letter opinion referred to above became a part of the legislative record in the hearings. It set

---

SB 536, and SB 595
1989: AJR 4, AJR 6, AB 222, SJR 21 and SB 18.

[5] In an opinion addressed to former Governor Grant Sawyer, Chairman of the Commission on Nuclear Projects, dated February 24, 1986 we characterized the Legislature's position at that time in terms of "a neutral posture and a studied objectivity."

[6] SB 18 which would have created a committee to negotiate terms for the acceptance of a repository was voted down in the Senate by a 20 to 0 vote (1 not voting). AJR 4 and AJR 6 opposing the repository passed the Assembly by a 36 to 3 vote (1 absent) and 37 to 4 vote (1 absent) respectively; each passed the Senate by a vote of 19 to 2. AB 222 making the storage of high-level radioactive waste in Nevada unlawful passed the Assembly by a 38 to 3 vote (1 absent) and the Senate by a 11 to 3 vote (7 not voting).

forth two bases underlying the Legislature's and Governor's authority to withhold consent for the federal repository. The first is of constitutional origin; the second is based upon a statutory right to submit a notice of disapproval contained in Section 116(b), 42 U.S.C. 10136(b), of the NWPA.[7]

The full text of AJR 4 and AJR 6 are set forth in the margin.[8]

---

[7] The legislative committees that conducted hearings on AJR 4 and AJR 6 had benefit of our advice relative to the Legislature's options as the letter opinion of September 22, 1988 was distributed by Mr. Laux to each of the legislators in advance of the session as a part of his duties contained in NRS 459.0095 to "provide information relating to radioactive waste to the legislature...". Furthermore, the "implied consent" problem addressed in the letter opinion was expressly referenced in the hearings.

[8] ASSEMBLY JOINT RESOLUTION 4 - Urging Congress not to allow the location of a repository for nuclear waste in Nevada.

WHEREAS, Because of the extremely dangerous nature of high level nuclear waste and the persistence of that danger for an extended period, the location of such waste in a repository in this state poses a serious hazard to the health and welfare of Nevadans; and

WHEREAS, The Residents of the State of Nevada are overwhelmingly opposed to permitting Nevada to become the dumping ground for nuclear waste generated in other states and foreign countries; now, therefore be it

RESOLVED BY THE ASSEMBLY AND SENATE OF THE STATE OF NEVADA, JOINTLY, that the Nevada Legislature expresses its adamant opposition to the placement of a high-level nuclear waste repository in the State of Nevada; and be it further

RESOLVED, That a copy of this resolution be transmitted forthwith by the Chief Clerk of the Assembly to the President of the United States, the Vice President of the United States as the presiding officer of the Senate, the Speaker of the House of Representatives and to each member of the Nevada Congressional Delegation; and be it further

RESOLVED, That this resolution becomes effective upon passage and approval.

ASSEMBLY JOINT RESOLUTION 6 - Expressing the Legislature's refusal to consent to the placement of a repository for high-level radioactive waste in Nevada.

WHEREAS, on December 22, 1987, Congress enacted the Nuclear Waste Policy Amendments Act of 1987, specifying Yucca Mountain, Nevada, as the sole location for evaluation as a suitable site for the placement of a national repository for high-level radioactive waste; and

WHEREAS, The Nuclear Waste Policy Amendments Act of 1987 represents just one of the many instances of federal overreaching with regard to the public land in this state; and

WHEREAS, The Federal Government claims ownership of approximately 87 percent of the total land in the State of Nevada, and has targeted that land for certain undesirable federal programs; and

WHEREAS, The Placement of a repository for high-level radioactive waste in the State of Nevada poses serious concerns about the transportation and storage of such waste and the potential harm to the environment and health of the residents and guests of this state; and

WHEREAS, the Nevada economy is dependent upon tourism and the perception of a safe environment; and

WHEREAS, The United States has a duty to protect the economy, environment and public health of this state, which the Nevada Legislature is empowered to protect and preserve; and

WHEREAS, The Federal Government has refused to assume full liability for any deleterious effects that could result from the placement of a repository for high-level radioactive waste in Nevada; and

WHEREAS, various polls of the people of this state, including our children in school, demonstrate an overwhelming opposition to the location of a repository for high-level radioactive waste at Yucca Mountain; now, therefore, be it

RESOLVED BY THE ASSEMBLY AND SENATE OF THE STATE OF NEVADA, JOINTLY, That the Federal Government, its agencies and instrumentalities shall not establish a repository for high-level radioactive waste at Yucca Mountain, Nevada, without the prior consent of the Nevada Legislature or a session of jurisdiction pursuant to chapter 328 of the Nevada Revised Statutes, which consent and session are hereby refused; and be it further

RESOLVED, That copies of this resolution be prepared and transmitted forthwith by the Chief Clerk of the Assembly to the President of the United States, the Vice President of the United States as the presiding officer of the Senate, the Speaker of the House of Representatives and to each member of the Nevada Congressional Delegation; and be it further

RESOLVED, That this resolution becomes effective upon passage and approval.

The active and operative language of the resolves: "... the Nevada Legislature expresses its adamant opposition to the placement of a high-level nuclear waste repository in the State of Nevada", in AJR 4, and "the Federal Government, its agencies and instrumentalities shall not establish a repository for high-level radioactive waste at Yucca Mountain, Nevada, without the prior consent of the Nevada Legislature or a cession of jurisdiction pursuant to Chapter 328 of the Nevada Revised Statutes, which consent and cession are hereby refused ...", in AJR 6, both individually and together express the Legislature's will with respect to either the constitutional or statutory basis for rejection of the federal repository in Nevada.

On June 28, 1989, the Nevada Legislature removed any conceivable doubt as to its intent and the State's policy when it enacted AB 222 into law.[9] The act states in part:

> It is unlawful for any person or governmental entity to store high-level radioactive waste in Nevada.

We have independently verified that AJR 4 and AJR 6 were transmitted to the Congress and the President on April 19, 1989. While Congress has not responded to these transmittals, we have evidence that the Nevada Legislature's actions have not escaped Congress' attention. For instance, Senate Report No. 101-83 of the 101st Congress dated July 25, 1989, submitted by Senator Johnston, Chairman of the Committee on Appropriations reporting on the Energy and Water Development Appropriation Bill for FY 1990 (HR 2696) stated:

> The Committee notes with concern the recent enactment of Nevada Assembly Bill 222, making it unlawful for any person or governmental entity to store high-level radioactive waste in Nevada.

We note that the Senate Report has been superseded in favor of the Conference Report submitted by Mr. Bevill, Report No. 101-235 dated September 7, 1989. Nothing was said concerning the Legislature's action or Yucca Mountain in the Committee of Conference report.

C. The Federal-State Connection

Nuclear reactor fuel rods are the basic component of the 70,000 metric tons of radioactive waste to be stored in the proposed repository. Given the nature of the waste as privately produced commercial waste, we assume that primary reliance is

---

[9] We note that you approved AB 222 on July 6, 1989, and it became law.

placed upon the Spending Power, contained in Article I, Section 8, Clause 1 of the Constitution, as the basis for the Congressional power to enact the amendments to the NWPA in 1987. The structure of the NWPA and the amendments tend to confirm the premise that financial incentives to be provided from the Nuclear Waste Fund are the principal drivers of the program.[10] These include establishment of the Nuclear Waste Fund, a potential benefits agreement set forth in Subtitle F of the Amendments Act, consideration in siting Federal research projects set forth in Subtitle G of the Amendments Act, the grants equivalent to taxes provision set forth in Section 116(c)(3), impact mitigation assistance provided for in Section 116(c)(2), and negotiated agreements for benefits under the Nuclear Waste Negotiator provisions of Title IV of the Amendments Act.

Notwithstanding its acceptance of participation grants, the State of Nevada has rejected, as it legitimately may do[11] any and all benefits emanating from the NWPA as amended. It cannot be suggested, based upon the facts, that the State has been co-opted by the federal undertaking.

The foregoing facts demonstrate that the State of Nevada and Congress have been involved directly and indirectly for a long period of time in an institutional dialogue concerning their respective governmental positions regarding the repository program. It is accurate to say that very little that officials of either governmental entity do with respect to repository matters escapes the attention of the other.[12]

Against this factual background we address the question you have posed.

ANALYSIS

We are of the opinion that you have correctly characterized Assembly Joint Resolution 4 and Assembly Joint Resolution 6 as a notice of disapproval authorized by Section 116(b), 42 U.S.C. 10136(b), of the Nuclear Waste Policy Act of 1982 as Amended, 42 U.S.C. 10101 *et seq.* (NWPA).

---

10 "The offer of benefits to a state by the United States dependent upon cooperation by the state with federal plans, assumedly for the general welfare is not unusual." Oklahoma v. Civil Service Commission, 330 U.S. 127, 144 (1947).

11 See, e.g., Townsend v. Swank, 404 U.S. 282,292 (1971); Rosado v. Wyman, 397 U.S. 397,420 (1970); King v. Smith 392 U.S. 309,316 (1968); Oklahoma v. United States Civil Serv. Comm'n, 330 U.S. 127, 143-144 (1947).

12 We note also in this regard that Senator Richard Bryan, former Governor of the State of Nevada was one of the most outspoken opponents of the repository. He took office as a United States Senator in January 1989 and has continued his opposition in the Congress.

Section 116(b), 42 U.S.C. 10136(b), states in part:

> (1) Unless otherwise provided by State law, the Governor or legislature of each State shall have authority to submit a notice of disapproval to the Congress under paragraph (2).
>
> * * *
>
> (2) Upon the submission by the President to the Congress of a recommendation of a site for a repository, the Governor or legislature of the State in which such site is located may disapprove the site designation and submit to the Congress a notice of disapproval. Such Governor or legislature may submit such notice of disapproval to the Congress not later than the 60 days after the date that the President recommends such site to the Congress under Section 114. A notice of disapproval shall be considered to be submitted to the Congress on the date of the transmittal of such notice of disapproval to the Speaker of the House and the President pro tempore of the Senate. Such notice of disapproval shall be accompanied by a statement of reasons explaining why such Governor or legislature disapproved the recommended repository site involved.

The threshold question which we must address is whether a notice of disapproval transmitted by the Governor and the Legislature to the Congress is valid and effective if submitted before the President has recommended Yucca Mountain to the Congress. For the reasons discussed below we answer this question in the affirmative.

The Nuclear Waste Policy Act of 1982 was based upon a negotiated compromise which recognized a state's right to issue a notice of disapproval after site characterization at three sites was completed and the selection by the Secretary of Energy of a single site was made, based upon a comparative evaluation of the three sites. The elimination of the Hanford site in Washington and the Deaf Smith County site in Texas by the Amendments Act of 1987 abrogated the 1982 compromise and eliminated the need to await the completion of site characterization and the President's recommendation in the particular circumstance addressed by AJR 4 and AJR 6, as we shall show.

Section 114(a)(2)(A), 42 U.S.C. 10134(a)(2)(A), of the Amendments Act described the President's authority to recommend the Yucca Mountain site to Congress. Section 114 (a)(2)(A) states:

> If after recommendation by the Secretary, the President considers the Yucca Mountain site qualified for application for a construction authorization for a repository, the President shall submit a recommendation of such site to Congress.

It has been widely accepted, following the amendments to the Nuclear Waste Policy Act in 1987 singling out Yucca Mountain as the only site to be characterized for the nation's high-level nuclear waste repository, that if Yucca Mountain is found suitable for the development of a repository during site characterization, it will be recommended pro forma to the President by the Secretary of Energy and in turn by the President to the Congress. Recent confirmation of this proposition was contained in Senate Report No. 101-83 of the 101st Congress, dated July 25, 1989, accompanying the Energy and Water Development Appropriation Bill, 1990 (H.R. 2696), supra. The Report states in part:

> Yucca Mountain, NV, has been designated as the site for detailed site characterization activities. If the Nevada site is found suitable after completion of site characterization, the site will be recommended for development as a repository and a license application will be submitted to the Nuclear Regulatory Commission. (Emphasis added).

The President's recommendation is keyed to the Secretary's recommendation, both of which may be anticipated by the Secretary's preliminary determination that the Yucca Mountain site is suitable for development as a repository. See page 2, ante, regarding the Secretary's action under Section 114(f) on May 28, 1986, before the section was repealed. By his preliminary determination of suitability, the Secretary has gone on record that the site is regarded administratively as suitable until determined unsuitable.

The Department of Energy's siting guidelines contained in 10 CFR 960, promulgated pursuant to Section 112(a), 42 U.S.C. 10132(a), establish the "criteria to be used to determine the suitability of such candidate site for the location of a repository." Section 113(b)(1)(A)(iv), 42 U.S.C. 10133(b)(1)(A)(iv). The guidelines, however, were developed in a form that presumes suitability unless disqualifying conditions are found.

A major criticism of DOE's Site Characterization Plan by the State of Nevada is that the DOE is searching only for technical data that will support the selection of Yucca Mountain as a high-level nuclear waste repository site, is neglecting studies that could potentially disqualify the site, and thus is attempting to support a determination of suitability at the

expense of a rigorous scientific examination. See State of Nevada's Comments on the DOE's Consultation Draft Site Characterization Plan (September 1988) and State of Nevada's Comments on DOE's Site Characterization Plan (September 1989). The Nuclear Regulatory Commission has voiced similar criticisms.[13]

Technical suitability, we must recognize, largely has to do with the radiological health and safety aspects of the disposal of nuclear materials, a field that Congress has occupied since the enactment of the Atomic Energy Act. See, e.g., Pacific Gas & Electric v. Energy Resources Commission, 461 U.S. 190,212 (1983). Nevada has been accorded substantial health and safety oversight and monitoring responsibilities under the NWPA; the Amendments Act did not alter the State's oversight over the Department of Energy's technical evaluation of the site. See, e.g., Nevada v. Herrington, 777 F.2d 529 (9th Cir. 1985). Nevada officials have the opportunity, in keeping with the State's oversight role, of identifying disqualifying factors which would bring the site characterization process to a close.

If, a disqualifying condition is found, site characterization must terminate and the Yucca Mountain site must be reclaimed. Section 113(c)(3), 42 U.S.C. 10133(c)(3), provides in this regard:

> If the Secretary at any time determines the Yucca Mountain site to be unsuitable for development as a repository the Secretary shall -- (A) terminate all site characterization activities at such site; ... (D) take reasonable and necessary steps to reclaim the site ...

We reach the preliminary conclusion that factors affecting the technical suitability of the site which relate solely to the ability of the site to contain the radioactive waste during the operational lifetime of the repository do not provide suitable reasons, at this time, to support a notice of disapproval in ad-

---

13 In a letter to Stephen H. Kale, Director, Office of Geologic Repositories, USDOE, dated March 7, 1988, Robert E. Browning, Division of High-Level Waste Management, Office of Nuclear Materials Safety and Safeguards, Nuclear Regulatory Commission, remarked on behalf of the NRC staff relative to the Consultive Draft Site Characterization Plan:

> The NRC staffs' most fundamental technical concern with the CDSCP is the failure to recognize the range of alternative conceptual models of the Yucca Mountain site that can be supported by the existing limited data base. ... [T]he site characterization program presented appears primarily designed to gather evidence in support of a preferred conceptual model rather than to obtain a thorough understanding of the site and the data necessary to reduce the uncertainties about which conceptual model best portrays the Yucca Mountain site.

vance of the completion of site characterization.[14] This does not mean that the State must stand by helplessly when disqualifying conditions are discovered. The structure of the NWPA, as amended, permits the State to petition the Secretary, based upon disqualifying factors which the State has identified, and unless the Secretary has evidence to refute the State's position he must terminate site characterization program based upon the Section 113(c)(3) requirement, set forth, supra. See also 10 C.F.R. 960.3-1-5; Section 119(a)(1), 42 U.S.C. 10139(a)(1). Congress, in the exercise of its preemptive authority, however, has reserved until after the President's recommendation a resolution of disputed questions of site suitability based on radiological health and safety factors underlying the State's statement of reasons in a notice of disapproval.

The foregoing discussion of technical suitability does not apply to the State's reasons for rejecting the repository which are otherwise within the State's competence and either not within the Congress' capability to preempt or not intended to be preempted. The PG&E case, supra, held that states are not preempted with regard to economic and environmental aspects of nuclear power generation.[15] The United States Supreme Court has held that, in the absence of preemption, a State is competent to object to and preclude the shipment of all of a particular type of waste into the State provided it may be accomplished by not discriminating against interstate commerce. See, e.g., City of Philadelphia v. New Jersey, 437 U.S. 617, 626-627 (1978). AJR 4 and AJR 6 when read with AB 222 establish a comprehensive legislative scheme of high-level radioactive waste exclusion from the State which is not preempted and which does not discriminate against interstate commerce.

The primary basis of the Legislature's objection to a continuation of the repository siting program as stated in AJR 6 was socioeconomic and environmental protection. As originally introduced the language of two "Whereas" provisions stated the primary reason for the resolution as viewed by the thirty-two sponsors in the Assembly:

---

[14] Site characterization insofar as it relates to a proposed repository is defined in Section 2(21)(B), 42 U.S.C. 10101(21)(B), of the NWPA as:

(B) activities, whether in the laboratory or in the field, undertaken to establish the geologic condition and the ranges of the parameters of a candidate site relevant to the location of a repository, including borings, surface excavations of exploratory shafts, limited subsurface lateral excavations, excavations and borings, and in situ testing needed to evaluate the suitability of a candidate site for the location of a repository, but not including preliminary borings and geophysical testing needed to assess whether site characterization should be undertaken.

[15] The State of California was not preempted from conditioning the construction of nuclear power generation facilities on economic or environmental grounds. California maintained and the Court of Appeals agreed that California's law prohibiting new nuclear construction based upon the lack of a permanent means of waste disposal was not preempted because the law "was aimed at economic problems, not radiation hazards." PG&E at 213,223. The Supreme Court affirmed. See also L. Tribe, 7 Ecology Law Quarterly, 679-729 (1979).

> Whereas, the placement of a perpetual repository for high-level radioactive waste in the State of Nevada could severely damage, if not, completely ruin, the economy and environment of this state; and
>
> Whereas, the United States has no right to destroy the economy and environment of this state, which the Nevada Legislature is empowered to protect and preserve; and ...

It is readily apparent, despite the fact that the final language was ameliorated, that the basis of the Legislature's concern was irreparable and uncompensated damage to the State's economy and environment.[16] These are interests which are not preempted. See Atomic Energy Act, Section 271, 42 U.S.C. 2018, and Section 274(k), 42 U.S.C. 2021(k); see also Silkwood v. Kerr-McGee Corp., 464 U.S. 238,256 (1984); English v. General Electric Co., 683 F. Supp. 1006,1010 (E.D.N.C., 1988); Gaballah v. PG&E, 711 F. Supp. 988,991 (N.D. Cal., 1989); Norris v. Lumbermen's Mutual Casualty Company, 58 L.W. 2126 (1st Cir., No. 89-1019, August 3, 1989).

Unlike the situation which existed when three sites were available and subject to a comparative evaluation after site characterization, jeopardy attached immediately to the Yucca Mountain site upon the occurrence of two conditions: 1) the

---

16 Preliminary findings published by the Nevada Nuclear Waste Project Office suggest that the perceptions of risk and the negative imagery attending nuclear waste disposal when amplified by the media may significantly impact Nevada's tourism industry and in-migration for business and retirement purposes. See e.g. Yucca Mountain Socioeconomic Project, an Interim Report on the State of Nevada Socioeconomic Studies, prepared by Mountain West Research for the Nevada Agency for Nuclear Projects/Nuclear Waste Project Office (NWPO-EE-022-89, June 1989). The stigmatizing effect of these impacts present a continuing problem for the State's Executive branch and Legislature. See f.n. 21, infra.

While we stress the socioeconomic aspects of the notice of disapproval, similar objections may be advanced in terms of environmental impacts. The substantial defects of the NWPA in terms of environmental protection and the environmental record of the Department of Energy at the 127 sites under its control speak for themselves. See,e.g.:

J. Lemons, C. Malone, B. Piasecki, America's High-Level Nuclear Waste Repository: A Case Study of Environmental Science And Public Policy, 34 Intern. J. Environmental Science 25 (1989).

J. Lemons, C. Malone, Frameworks For Decisions About Nuclear Waste Disposal, 34 Intern. J. Environmental Science 263 (1989).

J. Lemons, C. Malone, Siting America's Geologic Repository For High-Level Nuclear Waste: Implications For Environmental Policy, 23(4) Environmental Management 435 (1989).

C. Malone, Environmental Review And Regulations For Siting A Nuclear Waste Repository At Yucca Mountain Nevada, 9(2) Environmental Impact Assessment Review 77 (June 1989).

See also:

B. Clary, M. Kraft, Impact Assessment And Policy Failure: The Nuclear Waste Policy Act of 1982, 8(1) Policy Studies Review 105 (Autumn 1988).

preliminary determination of suitability and 2) the elimination of other candidate sites. The State was then confronted with the immediate need to assess the impacts to its legitimate interests and to timely exercise the options that were available to register its opposition and pursue its remedies. The notice of disapproval under consideration herein is merely one of those options.

Congress waived the requirement that the State's notice of disapproval be submitted after the President's recommendation by providing an alternative procedure based upon State law as a substitute for the procedure contained in paragraph (2) of Section 116(b). The phrase "Unless otherwise provided by State law," which precedes the balance of the sentence, "the governor or legislature of each State shall have authority to submit a notice of disapproval to the Congress under paragraph (2)," suggests that the State may submit its notice according to the procedures established by State law rather than or in the alternative to the procedure in paragraph (2). This alternative does not apply to a notice based on the technical considerations, as we have pointed out, because federal law rather than state law is determinative as to the timing of the radiological health and safety technical matters. There is no apparent reason, however, why the State law alternative should not apply to a notice of disapproval based upon socioeconomic impact analysis which is not dependent upon site characterization and is not preempted.

The phrase "Unless otherwise provided by State law" has special significance in relation to Nevada law. In 1981 the Nevada Legislature amended NRS Chapter 328 relative to State consent for governmental activities on federal lands and for cessions of State jurisdiction to the United States. In particular, the Legislature enacted NRS 328.075 which provides:

> Upon application by an officer of an agency or instrumentality of the United States in accordance with Clause 17 of Section 8 of Article I, of the Constitution of the United States, the legislature, or the legislative commission when the legislature is not in regular session, may by resolution cede concurrent criminal jurisdiction to the United States respecting any land held by the United States for the erection of forts, magazines, arsenals, dockyards or other needful buildings, or for another governmental purpose authorized by the Constitution, subject to the conditions and reservations set forth in this Section and NRS 328.085. <u>Jurisdiction other than concurrent criminal jurisdiction may be ceded only by the legislature when in regular session.</u> (Emphasis added).

<u>See also</u> <u>Pendleton v. State</u>, 103 Nev. 95,734 P.2d 693 (1987).

The jurisdiction required by the federal government to secure the integrity of an underground nuclear repository for 10,000 years must be exclusive as this office has opined on previous occasions.[17] See, e.g., the informal letter opinion addressed to Robert Loux, Executive Director of the Nuclear Waste Project Office/Nevada Agency for Nuclear Projects dated September 22, 1988; see also, the State's complaint in Nevada v. Watkins, No. 86-7308 (9th Cir.); Nevada v. Burford No. 89-15272 on appeal (9th Cir.). The Legislature, conscious of its own statute, NRS 328.075, directly addressed the Article I, Section 8, Clause 17 issue in AJR 6, as it was required to do, if at all, in regular session. We must presume that Congress is aware of the requirements of Article I, Section 8, Clause 17 and that State legislative action is necessary to invest the Federal government with the requisite jurisdiction to accomplish the repository siting program. Section 116 of the NWPA; Article I, Section 8, Clause 17 of the Constitution and NRS 328.075 are in pari materia in relation to the notice of disapproval since all three deal with substantive and procedural aspects of State consent and as a consequence must be construed with reference to each other. Since Nevada's Legislature meets in regular session only at two-year intervals, the only way that the three provisions may be construed so as to give effect to each is to recognize that the term "Unless otherwise provided by State law" permits State law which establishes biennial regular sessions of the Legislature (Nev. Const., Art. 4, § 2), to supplant the 60 day time period in Section 116(b)(2) of the NWPA and permit a timely notice of disapproval to be submitted during a regular session. We believe that such an interpretation is logically sound and consistent with the intent of Congress in relation to Congress' reservation of its authority to resolve conflicts in siting activities which are ripe for Congressional action.[18] Our interpretation is consistent with the congressional history of the notice of

---

[17] A Nuclear Regulatory Commission requirement in 10 CFR 60.121 provides: "Both the geologic repository operations area and the controlled area shall be located in and on lands that are either acquired lands under the jurisdiction and control of DOE, or lands permanently withdrawn and reserved for its use."

[18] In October 1984 during consideration of S.1291 a bill authorizing appropriations for the Nuclear Regulatory Commission, an amendment was offered to the NWPA which reads:

> Section 126. The provisions of Sections 115, 116, 117, and 118 of this subtitle shall constitute the exclusive rights of participation by an affected State or Indian tribe in the planning, siting, development, construction, and operation of a repository or a monitored, retrievable storage facility that is required to be licensed by the Commission; provided, however, that nothing in this Act shall preclude any recognized right of any State or Indian tribe under existing law with respect to such repository or monitored, retrievable storage facility.

The amendment was rejected because the rights which the sponsors were attempting to preserve under both federal and state law were deemed already embodied in the NWPA. See, e.g., 130 Cong. Rec. S14177 (daily ed., October 10, 1984). We believe that it was not only Nevada's permitting authority which the sponsors were attempting to preserve and that Congress required DOE to recognize but provisions such as those contained in NRS Chapter 328 as well.

disapproval and the two house override.[19] Given the carefully crafted compromise underlying the NWPA we believe that the "Unless otherwise provided by state law" language was Congress' attempt to be cognizant of the "sensitive interrelationship between statutes adopted by the separate, yet coordinate, federal and state sovereignties," in an effort "to reconcile 'the operation of both statutory schemes with one another rather than holding one completely ousted'." Merrill Lynch, Pierce Fenner & Smith v. Ware, 414 U.S. 117,127 (1973).[20]

---

19 Senator Proxmire offered Amendment No. UP 1579 which was debated on the floor of the Senate on December 20, 1982. Passage of the amendment established the notice of disapproval language and the two house override. See 129 Cong. Rec. S 15649 - 15652. Senator Mitchell, now Senate Majority Leader, speaking to the Proxmire amendment stated:

> The amendment, which is similar to the original House language, would require that a State's objection would stand unless both Houses of Congress vote to override the objection.
>
> The difference between the two provisions is, on the surface, a slim one. But the crucial difference centers in where the burden of proof lies once the State registers an objection. The Senate and House bills place the burden of proof on the State. The State would effectively be forced to convince one House to sustain its objections.
>
> The amendment, on the other hand, would place the burden of proof where it belongs - with the Department of Energy. If DOE decides on a specific site on the basis of a number of considerations, it is only right that the Federal agency should bear the responsibility to convince both Houses of the Congress of the virtues of its decision.
>
> As both bills are presently written, the Department of Energy could decide on a specific site, but be in no way compelled to argue for that site before the Congress.
>
> Mr. President, there is no issue of greater importance in this legislation than the rights of states and ordinary citizens to participate in the evaluation, siting, and licensing processes. At the heart of this public participation discussion is the ability of States to object to the proposed siting of a repository and to be insured of a fair process after such an objection is made. This amendment would guarantee [sic] that a State's objections is dealt with in a fair and comprehensive manner. (Emphasis added).

129 Cong. Rec. S 15652 (daily ed., December 20, 1982)

During the debate regarding the Cannon amendment on April 29,1982 which was similar to the later enacted Proxmire amendment, Senator Riegle spoke to the Cannon amendment as follows:

> The Cannon amendment will establish an expedited congressional process, that is in the national interest, but will put the burden of 'selling' the site on the government rather than on the State. The Congress should be brought into the siting process, and should force that decision with an affirmative vote.
>
> To be sure, the burden of proof will be a difficult job for the government, but it really should be as difficult as possible. We must proceed very carefully in this area, and be confident that the States have a right to appeal, be heard, and possibly to modify the siting decisions.

20 It is not unusual for the United States to look to state law for the creation, explication or vindication of important federal interests. See, e.g., Oregon v. Corvallis Sand & Gravel Co., 429 U.S. 371 (1977); In re Water of Hallett Creek Stream Sys., 44 Cal. 3rd 448, 749 P.2d 324, 243 Cal. Rptr. 887 (1988), cert. denied sub nom., California v. United States, 109 S. Ct. 71 (October 2, 1988); State v. State Engineer, 104 Nev. ___, 766 P.2d 243 (1989); see also Guaranty Trust Co. v. York, 326 U.S. 99 (1945); Rules of Decision Act, 28 U.S.C. 1652.

The question of impacts to Nevada's economy and environment which may result from site characterization and subsequent repository siting activities has been addressed in a variety of State reports and publications.[21] Congress directly invited an

---

Our analysis recognizing the role that state law plays is directed primarily to the preservation of an opportunity for the Nevada Legislature to exercise an effective veto in the form of a notice of disapproval. Obviously, the governor is not constrained by the 60 day window in Section 116(b) as he has a continuing opportunity to submit his own notice of disapproval. Assuming for the sake of argument, that Section 116(b) were strictly construed without regard to NRS 328.075, and that the governor were so disposed, he could frustrate the Legislature's opportunity where the 60 day window occurred during the 18 months when the Legislature is out of session by simply not calling a special session. See Nev. Const. Art. 5, § 9. Such an interpretation would lead to an absurd result. Given the logical thrust of our analysis, we must also recognize a flip side to the opportunity coin, that is, that the Legislature should not be bound to issue a notice of disapproval only during a regular session despite the language of NRS 328.075 which specifies the procedure for such action because the governor, as noted, has the constitutional prerogative to "convene the Legislature by Proclamation" and to specify "the purpose for which they have been convened." Id. The constitutional provision takes precedence over the statute to the extent there is a conflict. See, e.g., Galloway v. Truesdell, 83 Nev. 13, 422 P.2d 237 (1967).

[21] Nevada Nuclear Waste Project Office Reports:

J. S. Petterson, Impact Assessment Incorporated, Gloania Incident Case Study, (NWPO-SE-105 June 1988)

M. R. Boyle, Growth Strategies Organization, Assessment of the Impact of a Nuclear Waste Repository at Yucca Mountain on the Economic Development Potential of Las Vegas, Clark County, and the Surrounding Area (NWPO-SE-016-89 January 1989)

H. Kunreuther, D. Easterling, P. Kleindorfer, Center for Risk and Decision Processes, The Wharton School, University of Pennsylvania, The Convention Planning Process: Potential Impact of a High-Level Nuclear Waste Repository in Nevada (NWPO-SE-021-89 September 1988)

Mountain West Research, Yucca Mountain Socioeconomic Project: An Interim Report on the State of Nevada Socioeconomic Studies (NWPO-SE-022-89 June 1989)

P. Slovic, et al., Decision Research, J. Chalmers et al., Mountain West Research, Perceived Risk, Stigma, and Potential Economic Impacts of a High-Level Nuclear Waste Repository in Nevada (NWPO-SE-023-89 July 1989)

Periodicals & Papers:

H. Kunreuther, W. Desvouges, P. Slovic, Public Perceptions Of Risk From The Proposed Nuclear Waste Repository, 30(6) Environment 16, (Oct. 1988).

W. Freudenberg, Perceived Risk, Real Risk: Social Science And The Art of Probabalistic Risk Assessment, 242 Science 44 (Oct. 1988).

P. Slovic, Perceived Risk, Stigma, And Potential Economic Impacts Of A High-Level Nuclear Waste Repository In Nevada, Paper presented at Nuclear Waste Management "89" in Tuscon, AR, Feb. 27, 1989.

H. Kunreuther, P. Slovic, Forecasting The Adverse Economic Consequences Of A Nuclear Waste Repository In Nevada, Paper presented at the AAAS Annual Meeting, San Francisco, CA, Jan. 17, 1989.

W. Desvouges, H. Kunreuther, P. Slovic, Perceived Risk and Nuclear Waste -- A National And Nevada Perspective, Papers presented at the AAAS Annual Meeting, San Francisco, CA, Jan. 14-19 1989.

early identification of impacts likely to result from site characterization so that remedial measures could be applied. See Section 116(c)(1)(B) and 116 (c)(2)(B). The State was provided financial assistance to prepare and submit a socioeconomic impact report to the Secretary of Energy under Section 116(c). Additionally, the Secretary was directed to submit a report to the Congress under Section 175 of the Amendments Act.

Section 175, 42 U.S.C. 10174(a), required that within one year of the Nuclear Waste Policy Amendments Act of 1987 "the Secretary shall report to Congress on the potential impacts of locating a repository at the Yucca Mountain site" setting forth fourteen specific reporting topics including "tourism and economic development" and "the potential loss of revenue and future economic growth." Congress obviously regarded these topics as requiring immediate attention by directing submittal of a report within one year. The Department of Energy superficially addressed the socioeconomic impacts on the Southern Nevada area in its Section 175 Report to the Congress dated December 1988, DOE/RW-0205.

The DOE's Section 175 Report and Nevada's AJR 4 and AJR 6 have properly joined the socioeconomic impact issue, the resolution of which, if properly presented to Congress was subject to the latter's resolution by inaction or affirmative vote.

The reasons stated in AJR 4 and AJR 6 identify a present basis for discontinuance of the repository program. It can not be maintained that the State's objection is premature because serious effects of the nuclear waste induced stigmatization of the Southern Nevada area may be cumulative and irreversible during and following the site characterization period. Furthermore, resolution of this objection is not dependent upon site characterization.

The Amendments Act identified economic, social, public health and safety, and environmental impacts that are likely to result from the site characterization activities at the Yucca Mountain site for early and special consideration by inviting reports from the State of Nevada and affected units of local government and from the Secretary. We believe Congress intended to be brought into the siting process to resolve legitimate objections raised by the State concerning these subjects. We do not believe that Congress intended to become involved only after major damage may have occurred.

AJR 4 and AJR 6 were legislative responses in part to drafts and discussions of the report compiled by the Nevada Nuclear Waste Project Office concerning projected socioeconomic impacts. See f.n. 16, supra.

In effect, Congress has invited a full explication and resolution of the impacts question. Both the State and DOE have responded and Congress has been fully advised by appropriate submittals from each. In view of the facts, we cannot ascribe to Congress an intent to ignore potentially irreparable and uncompensated socioeconomic and environmental impacts that may arise from further repository siting activities. To do so would impute a callous disregard on Congress' part to the State's economic health and other important interests. We are not prepared to impugn the integrity of Congress in this manner.

Advance notice of disapproval by the Governor or the Legislature and the Congressional attention triggered thereby are both responsible and appropriate given the fact that the Department of Energy intends to spend billions of dollars of the citizen ratepayer's contributions for the purpose of site characterization. See Section 302 of the NWPA, 42 U.S.C. 10222; Section 111(a)(5), 42 U.S.C. 10131(a)(5). Furthermore, early Legislative action is the best assurance against later claims of estoppel, acquiescence and implied consent which may be directed against the State.[22] See, e.g., Brown v. United States, 552 F.2d 817 (1977)

We consider it appropriate to address another requirement in Section 116(b)(2) of the NWPA which may affect the State's reliance upon the validity of AJR 4 and AJR 6 as a notice of disapproval. The section states that:

> Such notice of disapproval shall be accompanied by a statement of reasons explaining why such governor or legislature disapproved the recommended repository site involved.

Reference to AJR 4 discloses two WHEREAS clauses in support of the Resolve; AJR 6 contains eight WHEREAS clauses. These recitals are equivalent in form and content to a statement of reasons.

A final inquiry is whether the resolutions were communicated to Congress in a form which Congress should have regarded as official notice. The Nevada Legislative Manual for 1989 provides at page 51:

> A joint resolution is passed by both houses in the same manner as a bill. It, too, must be signed by the governor unless it is a measure amending the constitution of the State of Nevada. Joint resolutions

---

[22] The Legislature acted at the earliest possible time following the 1987 amendments which identified Yucca Mountain as the only site to be characterized.

are used for the purpose of requesting the Congress of the United States, the President, a federal agency, or member of the Nevada Congressional Delegation to perform some act believed to be for the best interests of the state or nation.

See also, Nev. Const. Art. 4, Sec. 18. It is reasonable to conclude that Congress, having been memorialized during previous years through joint resolutions from the Nevada Legislature, would regard the State's joint resolutions, AJR 4 and AJR 6, as valid communications when made in the form traditionally used for this type of communication with the Congress.

We note that copies of both resolutions were transmitted to the President of the United States, the Vice President of the United States as the presiding officer of the Senate, the Speaker of the House of Representatives and to each member of the Nevada Congressional Delegation.

Based upon the foregoing analysis, we are of the opinion that a valid and effective notice of disapproval has been submitted to both houses of Congress.

Having established the validity of the notice, we now address the implications attending Congress' failure to enact within 90 days a "joint resolution of repository siting approval." We address this inquiry with the appropriate admonition that Congress' silence is a political choice committed solely to Congress' discretion, which admits of no scrutiny and is not justiciable. See, e.g., Baker v. Carr 369 U.S. 186,217 (1962).

Insofar, as the present status of the repository program in Nevada is concerned, we must look to the plain meaning of the federal statutes. Section 116(b)(2) of the NWPA provides that "A notice of disapproval shall be considered to be submitted to the Congress on the date of the transmittal of such notice of disapproval to the Speaker of the House and the President pro tempore of the Senate." As indicated in your opinion request, you signed both AJR 4 and AJR 6 on April 19, 1989. We have independently verified that the resolutions were transmitted on April 19, 1989.

Section 115(c)(d)and(e) established the procedures which Congress imposed upon itself when a notice of disapproval is submitted to it. Section 115(c) provides in this regard:

> (c) CONGRESSIONAL REVIEWS OF PETITIONS.--If any notice of disapproval of a repository site designation has been submitted to the Congress under section 116 or 118 after a recommendation for approval of such site is made by the President under section 114, such site

shall be disapproved unless, during the first period of 90 calendar days of continuous session of the Congress after the date of the receipt by the Congress of such notice of disapproval, the Congress passes a resolution of repository siting approval in accordance with this subsection approving such site, and such resolution thereafter becomes law.

It is clear that 90 calendar days of continuous session have elapsed since April 19, 1989. See, e.g., Section 115(f), 42 U.S.C. 10135(f). Neither the Senate nor the House of Representatives has addressed a resolution of repository siting approval as required by the procedures in Section 115(c) and (d). As a consequence, we are of the opinion that public officials of the State of Nevada may justifiably rely upon a claim that the Yucca Mountain site is disapproved by Congress and shall not be considered for development as a repository.

Our opinion that Congress has decided to abandon Yucca Mountain is bolstered by the fact that the Conference Report (Report No. 101-235) dated September 7, 1989 to accompany H.R. 2696 superseded the Senate Report dated July 25, 1989 which had made extensive reference to the need for continuing the site characterization program at Yucca Mountain. The Conference Report is silent with respect to Yucca Mountain; the implications of such a silence are reinforced by Congress' silence in addressing AJR 4 and AJR 6.[23]

CONCLUSION

We frankly recognize that there is a great deal of uncertainty in terms of Congress' own assessment of the status of the high-level waste program, however, we are left with no choice, based upon Congress' actual response, but to conclude that because the Legislature and the Governor of Nevada have unequivocally expressed opposition to the continued program to site a repository at Yucca Mountain based upon competent authority and material reasons, Congress has acceded to the State's wishes. Such a conclusion is consistent with concepts of federalism and the constitutional requirement for consent in Art. I, Section 8, Clause 17, and we consider it supported in fact and as a matter of law. We are therefore of the opinion that the Yucca Mountain site in Nevada is disapproved.

---

[23] It is significant that the appropriation to the State of Nevada was reduced from $11,000,000 for the 1988-89 fiscal year to $5,000,000 for the 1989-90 fiscal year, with an additional $6,000,000 which may be provided to the State of Nevada, at the discretion of the Secretary of Energy. This reduction in the State's oversight grant would be anomalous given the fact that the State's need for funds is greatest during the site characterization period if it were not for the State's recently legislated policy position.

With respect to the pending applications for permits, it appears, based upon the foregoing conclusions, that they are moot. We advise you therefore to direct the agencies considering such permits to consider action upon the applications as unnecessary.

If we may be of further assistance in this matter please do not hesitate to contact us.

Very truly yours,
BRIAN McKAY
ATTORNEY GENERAL

BY: Harry W. Swainston
Harry W. Swainston
Deputy Attorney General

HWS:cs