Indiana Michigan
Power Company
Cook Nuclear Plant
One Cook Place
Bridgman, MI 49106
616-465-5901

AEP
INDIANA
MICHIGAN
POWER

August 15, 2000 C0800-10

Docket Nos.: 50-316

U.S. Nuclear Regulatory Commission
ATTN: Document Control Desk
Mail Stop O-P1-17
Washington, DC 20555-0001

Donald C. Cook Nuclear Plant Unit 2
NRC GENERIC LETTER (GL) 96-06
ASSURANCE OF EQUIPMENT OPERABILITY AND CONTAINMENT INTEGRITY DURING DESIGN BASIS ACCIDENT CONDITIONS
(TAC NOS. M96801 AND M96802)

References:
1. Letter from E. E. Fitzpatrick, Indiana Michigan Power Company, to Nuclear Regulatory Commission, AEP:NRC:1256A, "NRC Generic Letter 96-06, Assurance of Equipment Operability and Containment Integrity During Design-Basis Accident Conditions", dated January 28, 1997.

2. Letter from E. E. Fitzpatrick, Indiana Michigan Power Company, to Nuclear Regulatory Commission, AEP:NRC:1256B, "Donald C. Cook Nuclear Plant Units 1 and 2,"NRC Generic Letter 96-06, Assurance of Equipment Operability and Containment Integrity During Design-Basis Accident Conditions", dated May 20, 1997.

3. Letter from John B. Hickman, Nuclear Regulatory Commission, to E. E. Fitzpatrick, Indiana Michigan Power Company, "Donald C. Cook Nuclear Plant, Units 1 and 2 - Request for Additional Information Re: Generic Letter 96-06 (TAC NOS. M96801 and M96802), dated July 9, 1997"

This letter provides a new response to Nuclear Regulatory Commission (NRC) Generic Letter (GL) 96-06 and supercedes the previous GL 96-06 responses, References 1 and 2. GL 96-06 requested licensees to assess the potential for piping to experience waterhammer or two-phase flow in containment air-cooler

A072

Printed on recycled paper

water systems, and the potential to overpressurize isolated piping sections inside containment following postulated design basis events. Indiana Michigan Power Company (I&M) submitted its response to the GL in references 1 and 2. Subsequent to these submittals, the NRC requested additional supporting information in reference 3.

I&M has further reviewed the piping systems located inside containment and revised its evaluation of GL 96-06 concerns. I&M has installed relief valves in Unit 2 isolated piping sections where needed and has performed an ASME Section III, Appendix F type evaluation of four lines as an interim measure. Additionally, a potential for both waterhammer and two-phase flow in both units' non-essential service water system has been identified and evaluated. The new evaluations are discussed in the attachment to this letter and are available for NRC review.

Further evaluations of the Unit 1 piping sections that are subject to overpressurization are being performed. The results of the evaluations will be provided in separate correspondence by November 1, 2000.

Attachment 1 to this letter provides the revised response to the GL, and Attachment 2 identifies those actions committed to by I&M in this submittal.

Should you have any questions, please contact Brian A. McIntyre, Acting Director of Regulatory Affairs, at (616) 697-5806.

Sincerely,

A. C. Bakken III
Site Vice President

/dmb

Attachments

c: J. E. Dyer
MDEQ – DW & RPD, w/o attachments
NRC Resident Inspector
R. Whale, w/o attachments

AFFIRMATION

I, A. Christopher Bakken III, being duly sworn, state that I am Vice President of Indiana Michigan Power Company (I&M), that I am authorized to sign and file this Request with the Nuclear Regulatory Commission on behalf of I&M, and that the statements made and the matters set forth herein pertaining to I&M are true and correct to the best of my knowledge, information, and belief.

Indiana Michigan Power Company

A. C. Bakken III
Site Vice President

SWORN TO AND SUBSCRIBED BEFORE ME

THIS 15th DAY OF August, 2000

Pamela J. Schmaltz
Notary Public

My Commission Expires 10-2-04

PAMELA J. SCHMALTZ
Notary Public, Berrien County, MI
My Commission Expires Oct 2, 2004

ATTACHMENT 1 TO C0800-10

REVISED RESPONSE TO GENERIC LETTER (GL) 96-06

Background

GL 96-06, "Assurance of Equipment Operability and Containment Integrity During Design-Basis Accident Conditions," requested licensees to perform the following actions:

Requested Action Items 1 and 2

Determine if containment air cooler cooling water systems are susceptible to either waterhammer or two-phase flow conditions during postulated accident conditions.

Response to Requested Action Items 1 and 2

The design of Donald C. Cook Nuclear Plant (CNP) Unit 2 does not include safety-related containment air coolers. CNP employs an ice condenser in the containment design whose primary function is the absorption of thermal energy released during a loss-of-coolant accident (LOCA), a main steam line break (MSLB), or a feedwater line break (FWLB) inside containment. This absorption of energy limits the initial peak pressure in the containment and aids in maintaining the long-term containment pressure below the design basis value of 12 psig. Long term post-accident containment cooling is provided by both the emergency core cooling system and the containment spray system.

The CNP design does include a non-safety-related containment ventilation system to maintain containment temperatures within acceptable limits for operation of equipment and personnel access during normal operation. The Unit 2 containment includes four upper compartment ventilation units, four lower compartment recirculation/ventilation units, and two instrument room ventilation units. Cooling water for the fan cooling coils is supplied by the non-safety-related non-essential service water (NESW) system. The fans are not required to operate following a LOCA, MSLB, or FWLB. The containment isolation valves for the NESW system automatically isolate on a containment hi-hi pressure isolation signal. However, the isolation valves would not close for a small break that did not generate a hi-hi pressure isolation signal, and cooling water would continue to flow through the cooling coils.

The safety function of the NESW piping to the containment air coolers is to retain its structural integrity. Thus, two-phase flow and waterhammer were evaluated for their potential to cause piping failure.

An evaluation, which included the development of hydraulic models, heat transfer calculations, and finite element stress analysis, concluded that there was no potential for the occurrence of two-phase flow in the lower containment ventilation units.

The operation of the upper containment cooling units, which computer models predict to experience two-phase flow during normal operation, would not be significantly impacted. With the exception of a small break that does not generate a hi-hi pressure isolation signal, the NESW to and from the cooling units is isolated. For the small break that does not generate an isolation signal, the steam from the break is introduced into the lower compartment and passes through the ice condenser where it would be condensed. Thus, it would not be a contributor to the upper unit's heat load, and operation under this accident condition would not differ from normal operation.

During the review, a potential for a waterhammer to occur in the NESW piping was identified and investigated. The NESW is an open loop system that supplies water to several components, including the upper containment air coolers. The water to the coolers is supplied from Lake Michigan, and it is returned to the lake after passing through the air coolers. These coolers are located more than 32 feet (the height at which a water column can be supported by air pressure) above the lake water level, and any water contained in piping above the lake elevation would drain if the NESW pumps were stopped. If a loss of offsite power to both units were to occur, all NESW pumps would lose power, coast down, and be loaded onto the diesel generators approximately 25 seconds later. The subsequent draining of the elevated piping would create a void, and when flow is reestablished, a potential for a waterhammer event is created.

The piping system has been analyzed for this postulated waterhammer condition, and the pressure pulses from a waterhammer are calculated to be approximately 150 psi. The piping and supports have been analyzed for the stresses and loads that would occur as a result of these pressure pulses. The stress analysis determined that the support loads were small and the piping stresses (waterhammer plus deadweight and thermal loads) were considerably less than the yield strength of the piping material.

Requested Action Item 3

Determine if piping systems that penetrate the containment are susceptible to thermal expansion of fluid so that overpressurization of piping could occur.

Response to Action Item 3

A review of lines penetrating containment has been performed, and the lines that are potentially isolated following design basis accidents have been identified. A listing of the lines penetrating containment is given in Table 1. These lines can be divided into six groups: those that have inherent pressure protection; a line whose normal operating temperature exceeds the predicted accident temperature; those having previously installed relief valves; those requiring modification; those that have been analyzed using ASME Section III, Appendix F criteria; and one line that requires a procedure change to ensure that water is not trapped between isolation valves.

Lines Having Inherent Pressure Protection (Category A)

The following types of lines are considered to have inherent overpressurization protection:

- Gas filled lines.
- Instrument lines that are isolated by hydraulic isolators designed to displace increasing fluid volume during high temperature LOCA and MSLB conditions.
- Lines that are steam filled under normal operating conditions.
- Lines that service safety related equipment required to mitigate a design basis accident and remain open during an accident.
- Lines that have a configuration that precludes overpressurization.

Line Whose Normal Operating Temperature Exceeds Accident Temperatures (Category B)

The chemical and volume control system (CVCS) letdown line is in continuous service and has a nominal temperature of 290°F at the containment penetration. The line is insulated to prevent injury to personnel, and its containment isolation valves are located in the annular area of the lower containment. Except for a 100-second interval at the beginning of a postulated steam line break, the nominal operating temperature exceeds the predicted lower compartment temperature.

During the 100-second interval, the heat transfer mechanism would be condensation on the relatively cold insulation surface. This would occur at the containment saturation temperature, approximately 240-250°F at the containment design pressure of 12 psig. Thus, following isolation, the water in this CVCS line would be cooled, and overpressurization would not occur.

Lines Having Previously Installed Relief Valves (Category C)

The following lines presently have previously installed relief valves and are, therefore, not subject to overpressurization:

- Component cooling water (CCW) lines to and from the containment recirculation (CEQ) fans.
- CCW lines to and from the main steam penetrations.
- CCW lines to and from the excess letdown heat exchanger.
- CCW lines to and from the reactor support coolers.

- Reactor coolant system (RCS) hot leg line to residual heat removal pumps (normal cooldown).
- CCW lines to and from the reactor coolant pump (RCP) motor and thermal barrier.

Lines Requiring Modification (Category D)

The following lines have segments that are subject to pressurization but previously contained no relief valves. Relief valves have been installed in these lines.

- NESW lines to and from the upper containment ventilation units.
- NESW lines to and from the lower containment ventilation units.
- NESW lines to and from the RCP motor air coolers.
- NESW lines to and from the instrument room ventilation units.
- Primary water supply line to the pressurizer relief tank.
- Demineralized water supply line.
- Containment sump pump discharge to waste disposal line.

The following lines have segments between isolation valves that are subject to pressurization under accident conditions. Bypass check valves have been installed parallel to an isolation valve to provide a flow path.

- Sample line from the RCS hot legs.
- Sample line from the pressurizer liquid space.
- Sample line from the accumulators.

Lines Analyzed to ASME Section III, Appendix F Criteria (Category E)

The lines that are described below have no relief valves and have been analyzed in accordance with ASME Section III, Appendix F criteria for inelastic analysis.

The water temperature in the isolated section was calculated for a postulated steam line break in which a peak temperature of 325°F exists for 120 seconds. The temperature then falls to 240°F for the remainder of the incident. The heat transfer mechanism consisted of either forced convection or condensation on the pipe surface (dependent on pipe location relative to the

break), conduction through the pipe wall, and natural convection heat transfer from the pipe inside wall to the water. The resulting peak water temperatures used in the stress analyses were 250°F for the RCP seal leak-off return line, the RCP seal bypass line, and the pressurizer relief tank (PRT) and reactor coolant drain tank (RCDT) drain piping. A resulting peak temperature of 240°F was used for the accumulator fill lines. Results of the stress analysis were compared with ASME Section III, Appendix F limits and found to be within these limits. This is an interim measure that is consistent with the guidance in GL 96-06, Supplement 1. The final resolution for these lines will be determined prior to the next refueling outage.

The following is a description of the lines that were analyzed:

Containment Penetration (CPN)-37: RCP Seal Leak-Off Return Line
See Drawing OP-2-5129A-31
CPN-37 consists of piping between containment isolation valves, including test connections. The system includes SA-312 type 304 stainless steel piping of two different sizes: 4-inch schedule 10 and 1-inch schedule 40.

RCP Seal Bypass Line
See Drawing OP-2-5128A-47
The isolated segment of the RCP seal bypass line consists of piping from the seal bypass line check valves to the normally closed valve in the common discharge header. The system includes SA-376 Type 304 stainless steel piping of two different sizes: 1-inch schedule 160 and ¾-inch schedule 160.

CPN-40: PRT and RCDT Drain Piping
See Drawing OP-12-5137A-19
CPN-40 consists of piping from the normally closed PRT drain line and the RCDT drain line check valve to the normally closed isolation valves outside containment. The system includes SA-312 Type 304 stainless steel piping of three different sizes: 4-inch schedule 10, 2-inch schedule 40, and ¾-inch schedule 40.

CPN-32: Accumulator Fill Lines
See Drawings OP-2-5143A-1, OP-2-5142-42
CPN-32 consists of piping from outside the containment isolation valves to the normally closed accumulator "inlet" valves and the normally closed valves in the flow paths to the low head safety injection hot leg loops. The system includes SA-376 Type 304 stainless steel piping of two different sizes: 1-inch schedule 160 and ¾-inch schedule 160.

Line Requiring Procedure Change (Category F)

The potential exists for pressurization of the refueling cavity drain line following the draining of the refueling cavity. This could happen if the refueling water were not adequately drained prior to closing the manual isolation valves. During system heatup, the water in the isolated section

would expand, and depending on the amount of trapped water, could pressurize the piping section. The applicable Unit 2 procedure has been modified to ensure that the refueling cavity is completely drained prior to isolation.

Table 1

LISTING OF CONTAINMENT PENETRATIONS

DESCRIPTION	PENETRATION NUMBER	CATEGORY
Fuel Transfer Tube	1	A
Steam generator main steam outlets	2	A
Steam generator main steam outlets	3	A
Steam generator main steam outlets	4	A
Steam generator main steam outlets	5	A
Steam generator blowdown line	6	A
Steam generator feedwater supply lines	7	A
Steam generator feedwater supply lines	8	A
Steam generator feedwater supply lines	9	A
Steam generator feedwater supply lines	10	A
RCP seal water supply	11	A
RCP seal water supply	12	A
RCP seal water supply	13	A
RCP seal water supply	14	A
Relief vent header	15	A
Residual Heat Removal (RHR) to reactor coolant cold legs	16	A
NESW to lower containment ventilation unit	17	D
NESW to lower containment ventilation unit	18	D
NESW to lower containment ventilation unit	19	D
NESW to lower containment ventilation unit	20	D
NESW from lower containment ventilation unit	21	D
NESW from lower containment ventilation unit	22	D
NESW from lower containment ventilation unit	23	D
NESW from lower containment ventilation unit	24	D
CCW to the CEQ fans	25	C
CCW from the CEQ fans	25	C
CCW to the main steam penetrations	25	C
CCW from the main steam penetrations	25	C
NESW from upper containment ventilation units	26	D
NESW to upper containment ventilation units	26	D
NESW to the RCP motor air coolers	26	D
NESW from the RCP motor air coolers	26	D
NESW from upper containment ventilation units	27	D
NESW to upper containment ventilation units	27	D
NESW to the RCP motor air coolers	27	D
NESW from the RCP motor air coolers	27	D
Spare penetration	28	A

LISTING OF CONTAINMENT PENETRATIONS, CONTINUED

Description	Penetration Number	Category
Control air	29	A
Plant air	29	A
Spare penetration	30	A
Dead weight test connection	30	A
Nitrogen supply to reactor coolant drain tank	31	A
Reactor coolant drain tank and pressurizer relief tank vents	31	A
Containment air particulate and gas detector sample line	31	A
Ice condenser and containment ventilation unit drain to drain header	31	A
Nitrogen to accumulators	32	A
Post accident sampling system supply (gas)	32	A
Accumulator test line from safety injection (SI) pump	32	E
Spare penetration	33	A
Primary water supply to the pressurizer relief tank	33	D
Letdown line – CVCS	34	B
Charging line - CVCS	35	A
Refueling water supply	36	A
Demineralized water supply	36	D
RCP seal leakoff return line	37	E
RCP motor and thermal barrier cooling water supply	38	C
RCP motor cooling water discharge	39	C
Reactor coolant drain tank pump suction	40	E
Containment sump pump discharge to waste disposal	41	D
Refueling cavity drain to purification system	42	F
SI	43	A
Boron injection inlet	44	A
RHR suction from sump	45	A
RHR suction from sump	46	A
RCS hot leg to RHR pumps (normal cooldown)	47	C
RHR to reactor coolant hot legs-low head SI	48	A
RHR to reactor coolant hot legs-low head SI	49	A
RHR to containment spray	50	A
RHR to containment spray	51	A
Upper containment spray inlet	52	A
Upper containment spray inlet	53	A
Lower containment spray inlet	54	A

LISTING OF CONTAINMENT PENETRATIONS, CONTINUED

Description	Penetration Number	Category
Lower containment spray inlet	55	A
Glycol from ice condenser fan coolers	56	A
Ice loading line	57	A
RCP thermal barrier cooling water discharge	58	C
Purge air inlet (containment)	59	A
Purge air outlet (containment)	60	A
Purge air inlet (instrument room)	61	A
Purge air outlet (instrument room)	62	A
Purge air outlet (containment)	63	A
Purge air inlet	64	A
Containment pressure relief line	65	A
Steam generator #2 blowdown sample	66	A
Steam generator #1 steam space sample	66	A
Sample line from hot legs	66	D
Sample line from pressurizer liquid space	66	D
Sample line from pressurizer steam space	66	A
Spare penetration	67	A
Spare containment penetration (Unit 2 only)	67	A
Post accident sampling system supply	67	A
Post accident sampling system return	67	A
SI	68	A
Spare penetration	69	A
Containment air particulate and gas detector sample return	70	A
Spare penetrations (5 lines)	70	A
Containment service	71	A
CCW to the CEQ fans	72	C
CCW from the CEQ fans	72	C
CCW to the main steam penetrations	72	C
CCW from the main steam penetrations	72	C
NESW to the instrument room ventilation units	73	D
NESW from the instrument room ventilation units	73	D
Instrument air	74	A
Nitrogen supply to pressurizer relief tank	74	A
CCW to the excess letdown heat exchanger	75	C
CCW from the excess letdown heat exchanger	75	C
Containment thimble removal	76	A
Steam generator blowdown line	77	A
Steam generator blowdown lines	78	A

LISTING OF CONTAINMENT PENETRATIONS, CONTINUED

Description	Penetration Number	Category
Steam generator blowdown lines	79	A
Ice loading return	80	A
Gas analyzer from pressurizer relief tank	81	A
Gas analyzer from reactor coolant drain tank	81	A
Sample line from accumulators	81	D
CCW to the reactor support coolers	82	C
CCW from the reactor support coolers	82	C
Containment weld channel pressurization air supply – Spare penetrations (2 lines)	83	A
NESW from upper containment ventilation units	84	D
NESW to upper containment ventilation units	84	D
NESW to the RCP motor air coolers	84	D
NESW from the RCP motor air coolers	84	D
NESW from upper containment ventilation units	85	D
NESW to upper containment ventilation units	85	D
NESW to the RCP motor air coolers	85	D
NESW from the RCP motor air coolers	85	D
Glycol to ice condenser fan coolers	86	A
Spare penetration	87	A
Spare penetration	88	A
Upper containment radiation sampling system	89	A
Spare penetration	90	A
Spare penetrations (2 lines)	91	A
Reactor vessel level instrument system	91	A
Containment pressure transmitters	91	A
Instrument room radiation sampling room	92	A
Containment pressure transmitters	92	A
Sample lines to hydrogen monitoring system (5 lines)	93	A
Reactor vessel level instrument system	94	A
Containment pressure transmitters	94	A
Sample lines to and from hydrogen monitoring system	95	A
Containment pressure transmitters	96	A
Reactor vessel level instrument system	97	A
Containment pressure transmitters	97	A
Reactor vessel level instrument system	98	A
Containment pressure transmitters	98	A
RCP discharge seal system bypass	N/A	E

Indiana Michigan
Power Company
Cook Nuclear Plant
One Cook Place
Bridgman, MI 49106
616-465-5901

AEP
INDIANA
MICHIGAN
POWER

September 8, 2000

C0900-10

Docket No.: 50-316

U.S. Nuclear Regulatory Commission
ATTN: Document Control Desk
Mail Stop O-P1-17
Washington, DC 20555-0001

Donald C. Cook Nuclear Plant Unit 2
NRC GENERIC LETTER (GL) 96-06,
"ASSURANCE OF EQUIPMENT OPERABILITY AND CONTAINMENT INTEGRITY DURING DESIGN BASIS ACCIDENT CONDITIONS"
(TAC NOS. M96801 AND M96802)

Reference:

1. Letter C0800-10, M. W. Rencheck, Indiana Michigan Power Company (I&M) to Nuclear Regulatory Commission, "Donald C. Cook Nuclear Plant Unit 2, NRC Generic Letter (GL) 96-06, Assurance of Equipment Operability and Containment Integrity During Design Basis Accident Conditions (TAC Nos. M96801 and M96802)," dated August 15, 2000.

Indiana Michigan Power Company's (I&M) letter number C0800-10 (Reference 1) provided a response to GL 96-06 for Donald C. Cook Nuclear Plant Unit 2. Attachment 1 to the response contained the following drawings:

OP-2-5129A-31
OP-2-5128A-47
OP-12-5137A-19
OP-2-5143A-1
OP-2-5142-42

Printed on recycled paper

In accordance with the restrictions stated on the drawings, I&M hereby releases these documents to the Nuclear Regulatory Commission (NRC) for its information and use in connection with the review of our submittal. I&M also permits the NRC to reproduce the drawings as necessary to facilitate review and distribution of the submittal to meet NRC requirements.

Sincerely,

W. J. Kropp
Director of Regulatory Affairs

/jen

c: J. E. Dyer
MDEQ – DW & RPD
NRC Resident Inspector
R. Whale

bc: D. C. Baker
R. W. Gaston
R. J. Grumbir
S. B. Haggerty
D. W. Jenkins
M. W. Rencheck/S. A. Greenlee
R. J. Smith
J. F. Stang, Jr., - NRC Washington, DC

DWG. NO. OP-2-5129A

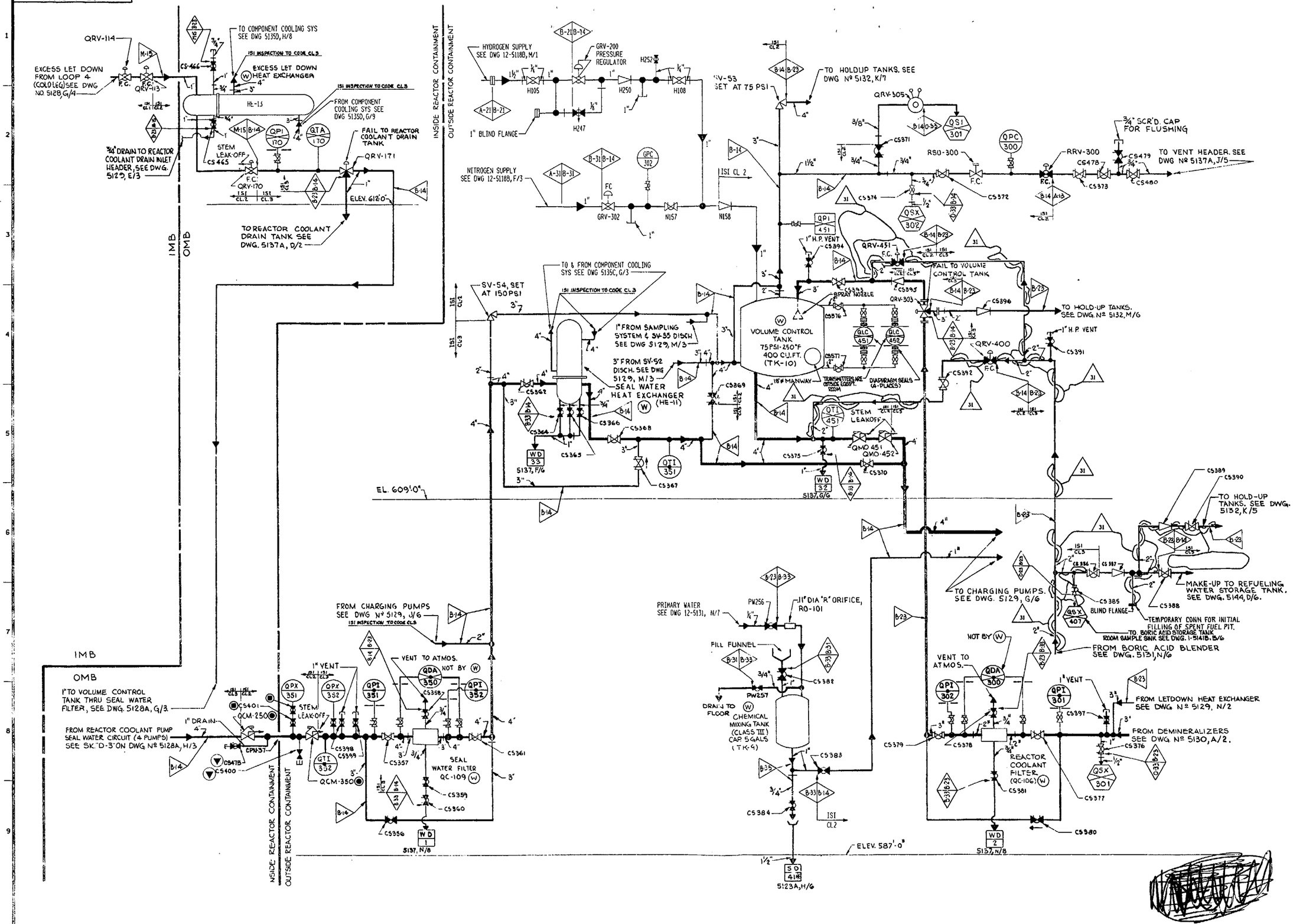

GENERAL NOTES

- UNLESS OTHERWISE NOTED ON THIS DRAWING:
- REFER TO DRAWING 12-5104 FOR "HAND OPERATED VALVE IDENTIFICATION NUMBERS" NOTES.
- THE UNIT PREFIX DESIGNATION FOR EACH COMPONENT IDENTIFICATION NO. IS " 2 ".

LEGEND

MAIN FLOW

AUX. FLOW

FOR VALVE, INSTRUMENT, SAMPLING, PIPE MATERIAL AND OTHER SYMBOLS NOT EXPLAINED ON THIS DWG AND FOR MARK NUMBER CODES SEE DWGS 12-5103 & 12-5104

SEISMIC CLASS I EXCEPT AS NOTED

(W) BY WESTINGHOUSE

ALL VALVES & INSTRUMENTATION SUPPLIED BY (W)

EQUIPMENT SUPPLIED BY (W) AS NOTED

NOTES:

1) FOR CODE CL 2 & 3 INSTRUMENT CONNS THE ISI BOUNDRY EXTENDS TO AND INCLUDES THE FIRST ROOT VALVE.

2) FOR CODE CL 2 & 3 VENTS & DRAINS THE ISI BOUNDRY EXTENDS TO & INCLUDES THE FIRST NORMALLY CLOSED VALVE.

3) FOR DISCONNECTED AND ABANDONED HEAT TRACING TO BORIC ACID CIRCUITS, REFER TO DRAWING NO. OP-12-5131A.

31

DATE	NO.	DESCRIPTION	APPD.
4-28-00	31	INCORPORATED PER 2-OCP-642 REV. 0 & 2-FCN-642-R0-38 ISSUED FOR RECORD DLS/DCS EM/JB KF/DD	GG
6-11-99	30	REVISED: SYMBOL FOR CONTAINMENT ISOLATION TEST CONN FROM SQUARE TO TRIANGLE FOR VALVE CS475 & CS400 AT C/8. DELETED: REACH ROD REQ'D AT E-F/4 & E/3 PER C/R 99-11126 A/B 024654. DLS/GM	LB
2-26-99	29	REVISED: VALVE PW256 FROM OPEN TO CLOSED AT H/7 PER C/R 99-0564 A/B 023525. DLS/C.C.	LB
5-27-98	28	REVISED: GPC-302-V1 FROM GLOBE VA TO DIAPHRAGH VA. DELETED: REACH ROD FROM VALVES AT L/9, L/8, K/8, E/8, D/8-9 & G/5 PER C/R 98-2148 A/B 022110. DLS/C.C.	JCJ
5-3-98	27	REVISED: CONTINUATION NOTE DWG & COORDINATES FROM 5135, C/3 TO 5135D, H/8 AT C/11 FROM 5135, C/4 TO 5135D, G/9 AT D/22 FROM 5135, G/3 TO 5135C, G/3 AT F/3 PER ADM 97-1000 A/B 021077X. GH/C.C.	JCJ
11-20-97	26	REVISED: VALVE CS383 FROM A DIAPHRAGH TO A GLOBE AT J/8 PER 12-NM-0396 A/B 021292. GH/LB	LB for JCJ

REVISIONS

FILENAME: OP-2-5129a.031
(raster file): OP-2-5129a 31.cit

"THIS DRAWING IS THE PROPERTY OF THE AMERICAN ELECTRIC POWER SERVICE CORP. AND IS LOANED UPON CONDITION THAT IT IS NOT TO BE REPRODUCED OR COPIED, IN WHOLE OR IN PART, OR USED FOR FURNISHING INFORMATION TO ANY PERSON WITHOUT THE WRITTEN CONSENT OF THE AEP SERVICE CORP. , OR FOR ANY PURPOSE DETRIMENTAL TO THEIR INTEREST, AND IS TO BE RETURNED UPON REQUEST"

INDIANA MICHIGAN POWER COMPANY

DONALD C. COOK

NUCLEAR PLANT

BRIDGMAN MICHIGAN

FLOW DIAGRAM
CVCS-REACTOR LETDOWN
& CHARGING

UNIT NO. 2 SHEET-1

DWG. NO. OP-2-5129A-31

ARCH	ELEC	MECH	STR

SCALE: DR:
DATE: CH:

DESIGN ENGINEERING DIVISION
REFER TO ORIG D.O. ISSUE MICROFILM FOR SIGNATURES

AMERICAN ELECTRIC POWER

AEP SERVICE CORP.
1 RIVERSIDE PLAZA
COLUMBUS, OH 43215

0 4-28-2000

ISSUE PLOT

1856373

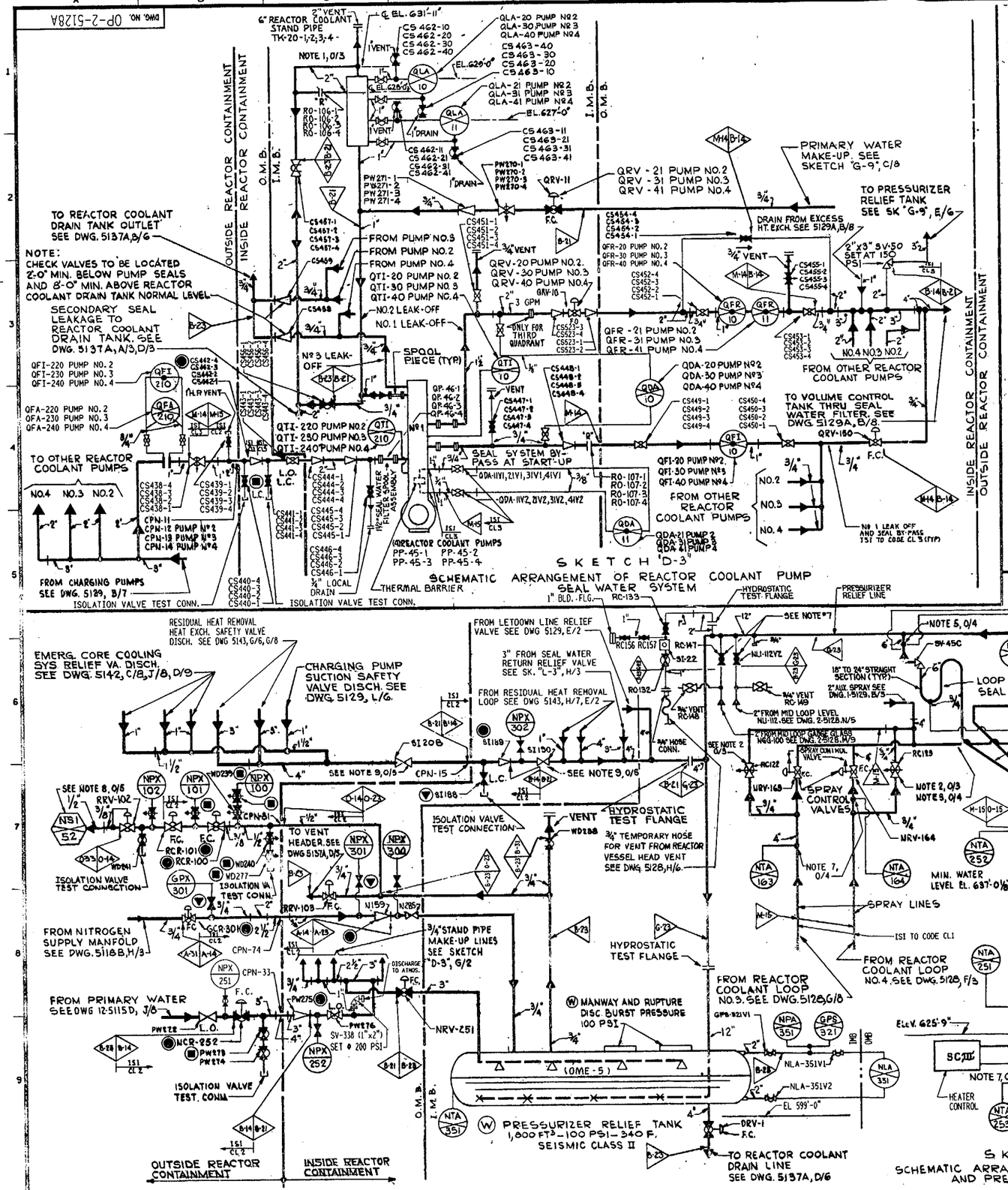

NOTES CONT'D:

4. NVA-131 AND NVA-132 (ALSO OTHER LOOPS 1&3) 121,122,141,142) OMIMS SENSORS MOUNTED ON B.G. SURFACE.
5. NVA-13 AND NVA-14 OMIMS SENSORS MOUNTED ON LIFTING LUGS.
6. NVA-11 AND NVA-12 OMIMS SENSORS MOUNTED ON CLAMPS BOLTED ON TO GUIDE TUBES.
7. VALVES TO BE OPEN ONLY DURING MID-LOOP OPERATION.

NOTES:

1. FOR CODE CLASS 1,2&3 INSTRUMENT CONN'S THE 1ST BOUNDARY EXTENDS TO AND INCLUDES FIRST ROOT VALVE.
2. FOR CODE CLASS 1 VENTS AND DRAINS THE 1ST BOUNDARY EXTENDS TO AND INCLUDES THE SECOND NORMALLY CLOSED VALVE OR EXTENDS TO AND INCLUDES THE BLIND FLANGE AFTER A NORMALLY CLOSED VALVE.
3. FOR CODE CLASS 2 AND 3 VENTS AND DRAINS THE 1ST BOUNDARY EXTENDS TO AND INCLUDES THE FIRST NORMALLY CLOSED VALVE.

GENERAL NOTES

- UNLESS OTHERWISE NOTED ON THIS DRAWING:
- REFER TO DRAWING 12-5104 FOR "HAND OPERATED VALVE IDENTIFICATION NUMBERS" NOTES.
- THE UNIT PREFIX DESIGNATION FOR EACH COMPONENT IDENTIFICATION NO. IS " 2 ".

LEGEND

- REACTOR COOLANT PIPING BY W
- AUX. PIPING
- INSTR. PIPING
- W BY WESTINGHOUSE

ALL VALVES AND INSTRUMENTATION BY W

FOR VALVE, INSTRUMENT, SAMPLING, PIPE MATERIAL AND OTHER SYMBOLS NOT EXPLAINED ON THIS DWG., AND FOR MARK NUMBER CODES, SEE DWGS. 12-5103, 5104.

NOTE: PIPING DESIGN TO FOLLOW CRITERIA INDICATED IN W AEW-1212 & AEW-316.

SEISMIC CLASS I EXCEPT AS INDICATED.

NOTE 1, C/7
ORIFICE IS A MIN. OF 7 FT. ABOVE THE CROWN TO THE REACTOR COOLANT PUMP.

NOTE 2, F/7, H/7
VALVE TO HAVE EXTENSION STEM TO BE OPERATED OUTSIDE OF PRESSURIZER ENCLOSURE AT EL. 612'-0".

NOTE 3, H/7
SLOPE SPRAY PIPE DOWNWARD TO PROVIDE WATER SEAL BETWEEN PRESSURIZER AND SPRAY VALVES.

NOTE 5, K/6, J/6, K/6
PLACE DETECTORS AT BOTTOM OF PIPE.

NOTE 6, K/6
SLOPE PIPE DOWNWARD TO PROVIDE WATER SEAL ON RELIEF VALVES.

NOTE 7, G/7, J/9
LOCATE APPROXIMATELY MIDWAY BETWEEN LOOP AND PRESSURIZER.

NOTE 8, A/7, J/7, J/9
FOR TRANSMITTED SAMPLE SEE DWG 5141.

NOTE 9, E/7
VALVE INTERNALS ARE TO BE REMOVED EXCEPT WHEN TESTING VALVE 61189

DATE	NO.	DESCRIPTION	APPD.
5-19-00	47	ADDED: SPEC. BREAK N-15/0-14 DOWNSTREAM OF VALVE RC-125 AT J/7 PER DCR-00-0367, C/R 99-29878 CD/GAHM	MKS
4-18-00	46	INCORPORATED PER 2-OCP-449 REV. 0 AND 2-FCN-449-R0-15 ISSUED FOR RECORD DLS/GNN	JHM
12-15-99	45	INCORPORATED PER PARTIAL RELEASE OF 2-OCP-449 REV. 0. ISSUED FOR RECORD. EAA AT/AP/KF/JJU	GG KAM
12-31-98	44	ADDED: SPEC. BREAK G-23 AT L/6,7. RELOCATED: SPEC. BREAK N-15/0-23 DOWNSTREAM OF VALVES NRV-151 NRV-152 & NRV-153 AT K,L/6,7. PER DCR-99-0305, C/R 99-10537 CD/GNN	JHM
12-18-98	43	REVISED: PIPING MATERIAL SPEC. FROM "0-13" TO "0-33" AT A/7. PER DCR-99-0201, C/R P99-16521 CD/GNN	JHM
3-2-98	42	REVISED: CAUTION NOTE AT L-M/9 PER C/R 97-1530 A/B 02173TAI. DLS/CC	JCJ

REVISIONS

FILENAME: op-2-5128a.047
(raster file): op-2-5128a 47.cif

"THIS DRAWING IS THE PROPERTY OF THE AMERICAN ELECTRIC POWER SERVICE CORP. AND IS LOANED UPON CONDITION THAT IT IS NOT TO BE REPRODUCED OR COPIED, IN WHOLE OR IN PART, OR USED FOR FURNISHING INFORMATION TO ANY PERSON WITHOUT THE WRITTEN CONSENT OF THE AEP SERVICE CORP., OR FOR ANY PURPOSE DETRIMENTAL TO THEIR INTEREST, AND IS TO BE RETURNED UPON REQUEST"

INDIANA MICHIGAN POWER COMPANY

DONALD C. COOK
NUCLEAR PLANT
BRIDGMAN MICHIGAN

FLOW DIAGRAM
REACTOR COOLANT
UNIT 2
SHEET 2 OF 2

EXCEPTIONS ARE NOTED

DWG. NO. OP-2-5128A-47

ARCH	ELEC	HECH	STR
SCALE:		DR:	
DATE:		CH:	

DESIGN ENGINEERING DIVISION
REFER TO ORIG ENG ISSUE MICROFILM FOR SIGNATURES

AEP AMERICAN ELECTRIC POWER
AEP SERVICE CORP.
1 RIVERSIDE PLAZA
COLUMBUS, OH 43216

- -- CAUTION - -
THE SET POINTS INDICATED ARE PROVIDED ONLY TO ASSIST IN UNDERSTANDING THE DRAWINGS. REFER TO APPROPRIATE SET POINT CONTROL DOCUMENTS FOR ACTUAL DEVICE SET POINTS. SAFETY VALVE SETTINGS ARE AS INDICATED ON DRAWING AND ARE NOT INCLUDED IN THE SCOPE OF THE CAUTION STATEMENT.

0 4-18-2000
M56373

DWG. NO. OP-12-5137A

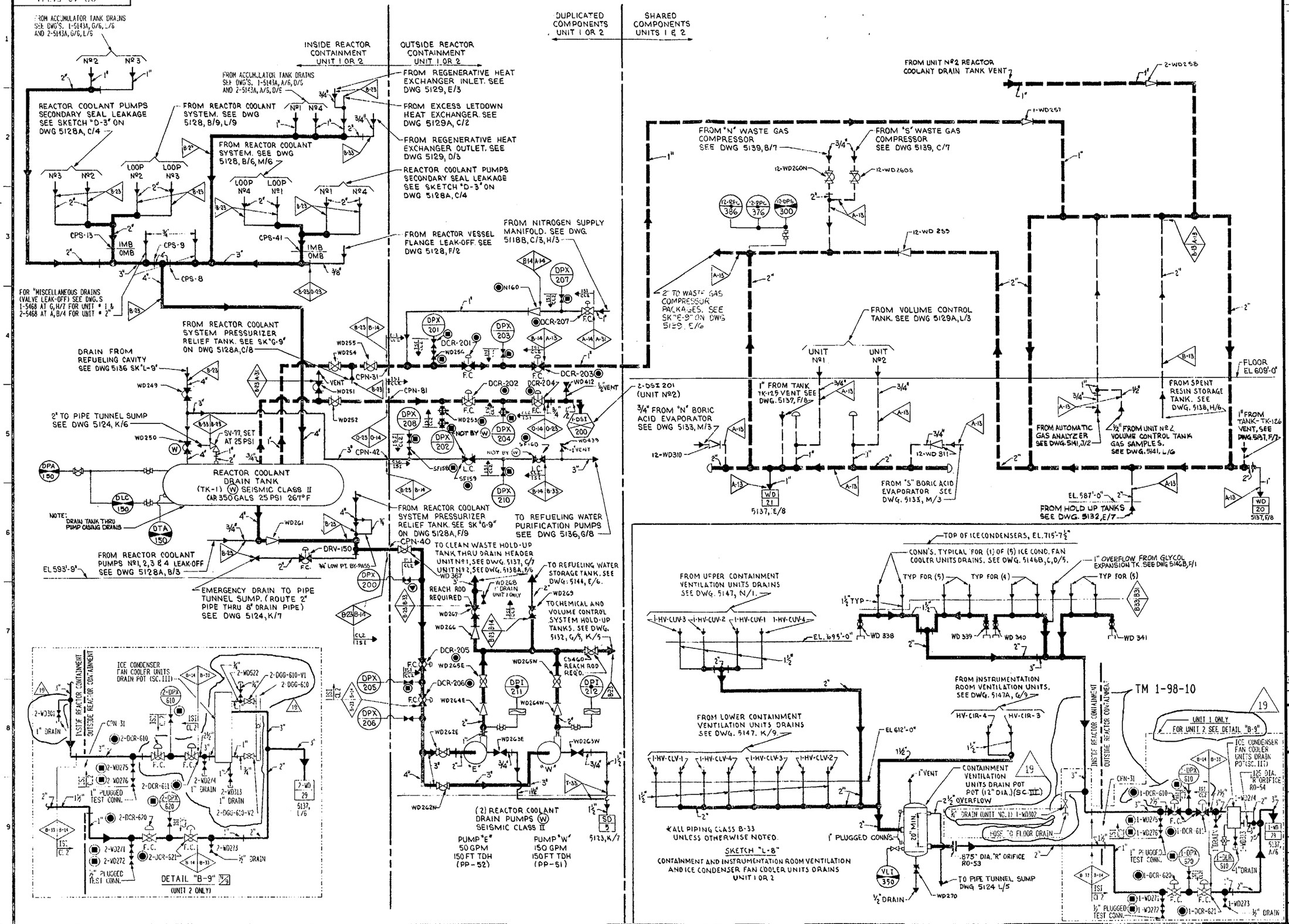

GENERAL NOTES

- UNLESS OTHERWISE NOTED ON THIS DRAWING:
- REFER TO DRAWING 12-5104 FOR "HAND OPERATED VALVE IDENTIFICATION NUMBERS" NOTES.
- THE UNIT PREFIX DESIGNATION FOR EACH COMPONENT IDENTIFICATION NO. IS " 12 ".

LEGEND

VENT PIPING

DRAIN PIPING

SYMBOLS

DIAPHRAGM SEAL

FOR VALVE, INSTRUMENT SAMPLING, PIPE MATERIAL AND OTHER SYMBOLS NOT EXPLAINED ON THIS DWG. AND FOR MARK NUMBER CODES, SEE DWG. 12-5103 AND 12-5104

(W) BY WESTINGHOUSE

ALL INSTRUMENTATION BY (W)

ALL VALVES BY (W) EXCEPT AS NOTED. ALSO NOTE THAT IN DRAIN & VENT LINES (W) SUPPLIES ONLY THE FIRST SHUT-OFF VALVE NEAREST ORIGIN

EQUIPMENT SUPPLIED BY (W) AS NOTED

NOTE: "B" EQUIPMENT SEISMIC CLASS AS NOTED

DATE	NO.	DESCRIPTION	APPD.
5-24	19	DELETED: REQUIREMENT FOR TM 2-98-02 PRZ/GJC. INCORPORATED PER 2-DCP-4464 REV. 1. ISSUED FOR RECORD EM/NA AT/JB/GJC.	GG PRZ/GJC

REVISIONS

FILENAME: op-12-5137a.019 (roster file): op-12-5137a.19.cil

"THIS DRAWING IS THE PROPERTY OF THE AMERICAN ELECTRIC POWER SERVICE CORP. AND IS LOANED UPON CONDITION THAT IT IS NOT TO BE REPRODUCED OR COPIED, IN WHOLE OR IN PART, OR USED FOR FURNISHING INFORMATION TO ANY PERSON NOT OF THE WRITTEN CONSENT OF THE AEP SERVICE CORP., OR FOR ANY PURPOSE DETRIMENTAL TO THEIR INTEREST, AND IS TO BE RETURNED UPON REQUEST"

INDIANA MICHIGAN POWER COMPANY

DONALD C. COOK

NUCLEAR PLANT

BRIDGMAN MICHIGAN

FLOW DIAGRAM WDS VENTS & DRAINS

UNIT NO. 1 & 2 SHEET 2 OF 2

EXCEPTIONS ARE NOTED

DWG. NO. OP-12-5137A-19

ARCH	ELEC	MECH	STR

SCALE: DRN:

DATE: CHK:

DESIGN ENGINEERING DIVISION

REFER TO ORIG. BAD TISSUE MICROFILM FOR SIGNATURES

AMERICAN ELECTRIC POWER

AEP SERVICE CORP. 1 RIVERSIDE PLAZA COLUMBUS, OH 43215

DWG. NO. OP-2-5143A

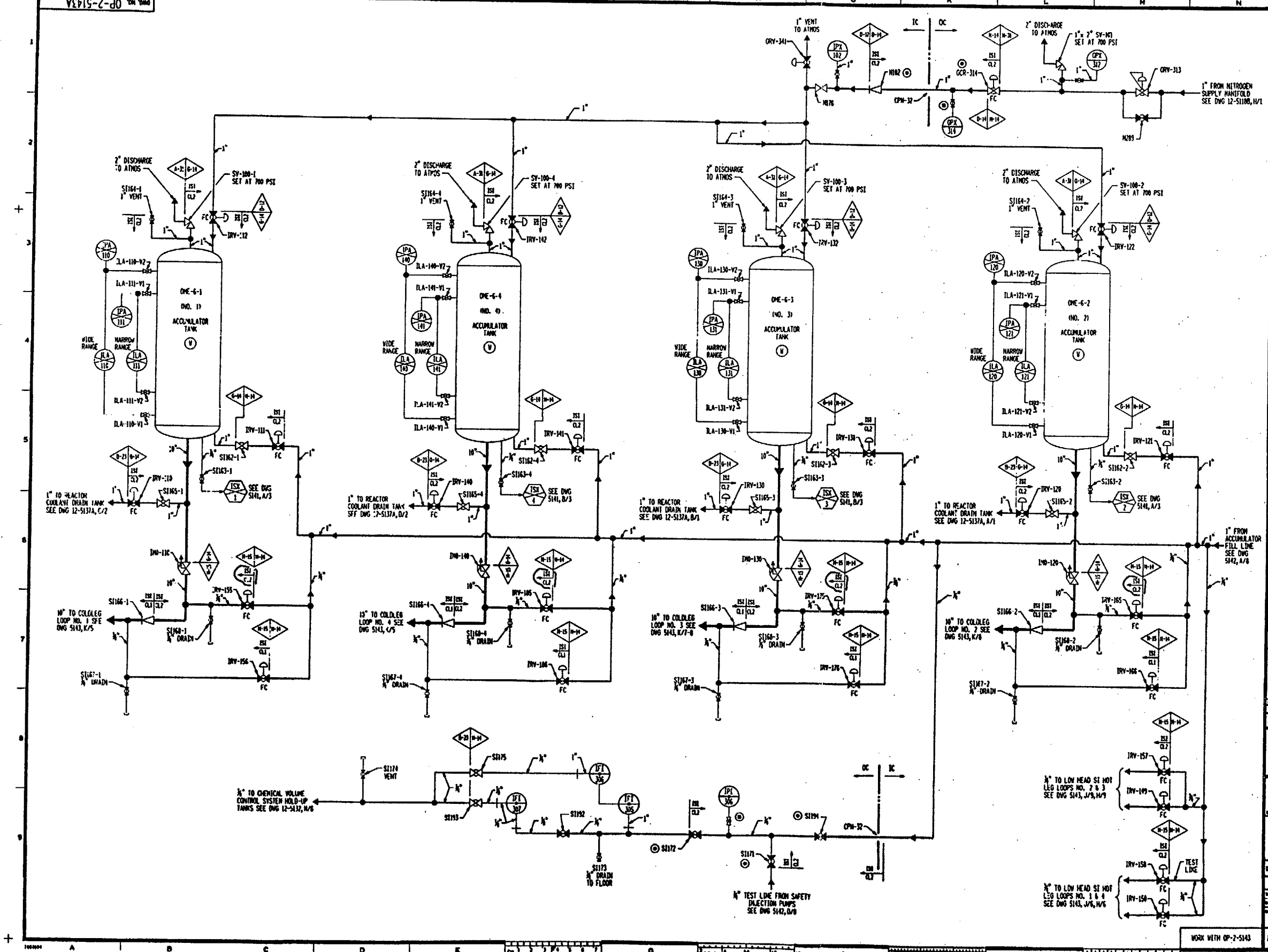

GENERAL NOTES

- UNLESS OTHERWISE NOTED ON THIS DRAWING:
- REFER TO DRAWING 12-5104 FOR "HAND OPERATED VALVE IDENTIFICATION NUMBERS" NOTED.
- THE UNIT PREFIX DESIGNATION FOR EACH COMPONENT IDENTIFICATION NO. IS " 2 ".

LEGEND

MAIN FLOW

AUXILIARY FLOW

FOR VALVE, INSTRUMENT, SAMPLING PIPE MATERIAL AND OTHER SYMBOLS NOT EXPLAINED ON THIS DWG AND FOR MARK NUMBER CODES SEE DWGS 12-5103, 5104.

ALL EQUIPMENT SEISMIC CLASS I, EXCEPT AS NOTED.

Ⓦ BY WESTINGHOUSE.

ALL EQUIPMENT, VALVES & INSTRUMENTS SUPPLIED BY Ⓦ EXCEPT AS NOTED.

EQUIPMENT SUPPLIED BY Ⓔ AS NOTED.

NOTE "A"
FOR CODE CLASS 1, 2 & 3 INSTRUMENT CONNECTIONS, THE ISI BOUNDARY EXTENDS TO AND INCLUDES THE FIRST ROOT VALVE.

NOTE "B"
FOR CODE CLASS 1 VENTS AND DRAINS, THE ISI BOUNDARY EXTENDS TO AND INCLUDES THE SECOND NORMALLY CLOSED VALVE OR EXTENDS TO AND INCLUDES THE BLIND FLANGE OR CAP AFTER A NORMALLY CLOSED VALVE.

NOTE "C"
FOR CODE CLASS 2 & 3 VENTS AND DRAINS THE ISI BOUNDARY EXTENDS TO AND INCLUDES THE FIRST NORMALLY CLOSED VALVE.

DATE	NO.	DESCRIPTION	APPR.
3/4/97	1	ADDED: 1ST CLJ AT N/8, J/6, F/6, C/6 PER C/R 96-3239 A/B 5170/4, D1/2/3-2.	LB
7-29-97	0	THIS DRAWING HAS BEEN CREATED FROM A PORTION OF DWG 2-5143-1F. REVISION FROM 4PCN 10 CLOSED VALVES 5140-1 AT B/4, 5140-2 AT H/5, 4140-3 AT H/3 & 5140-4 AT E/4 PER ADM 97-0764, A/B 4PNA4. BWC.C.	LB FOR JCJ

REVISIONS

"THIS DRAWING IS THE PROPERTY OF THE AMERICAN ELECTRIC POWER SERVICE CORP., AND IS LOANED UPON CONDITION THAT IT IS NOT TO BE REPRODUCED OR COPIED, IN WHOLE OR IN PART, OR USED FOR PURPOSES DETRIMENTAL TO AND FOREIGN WITHOUT THE WRITTEN CONSENT OF THE AEP SERVICE CORP., OR FOR ANY PURPOSE DETRIMENTAL TO THEIR INTERESTS, AND IS TO BE RETURNED UPON REQUEST"

INDIANA MICHIGAN POWER COMPANY

DONALD C. COOK
NUCLEAR PLANT
BRIDGMAN MICHIGAN

FLOW DIAGRAM
EMERG. CORE COOLING (RHR)
ACCUMULATOR PIPING
UNIT NO. 2

DWG. NO. OP-2-5143A-1

ARCH	ELEC	MECH	STR

MAIN
MAIN
APPROVED DRAWING REVIEWED
DATE 10-17-97 DATE 10-17-97

AEP AMERICAN ELECTRIC POWER

AEP SERVICE CORP.
1 RIVERSIDE PLAZA
COLUMBUS, OH 43215

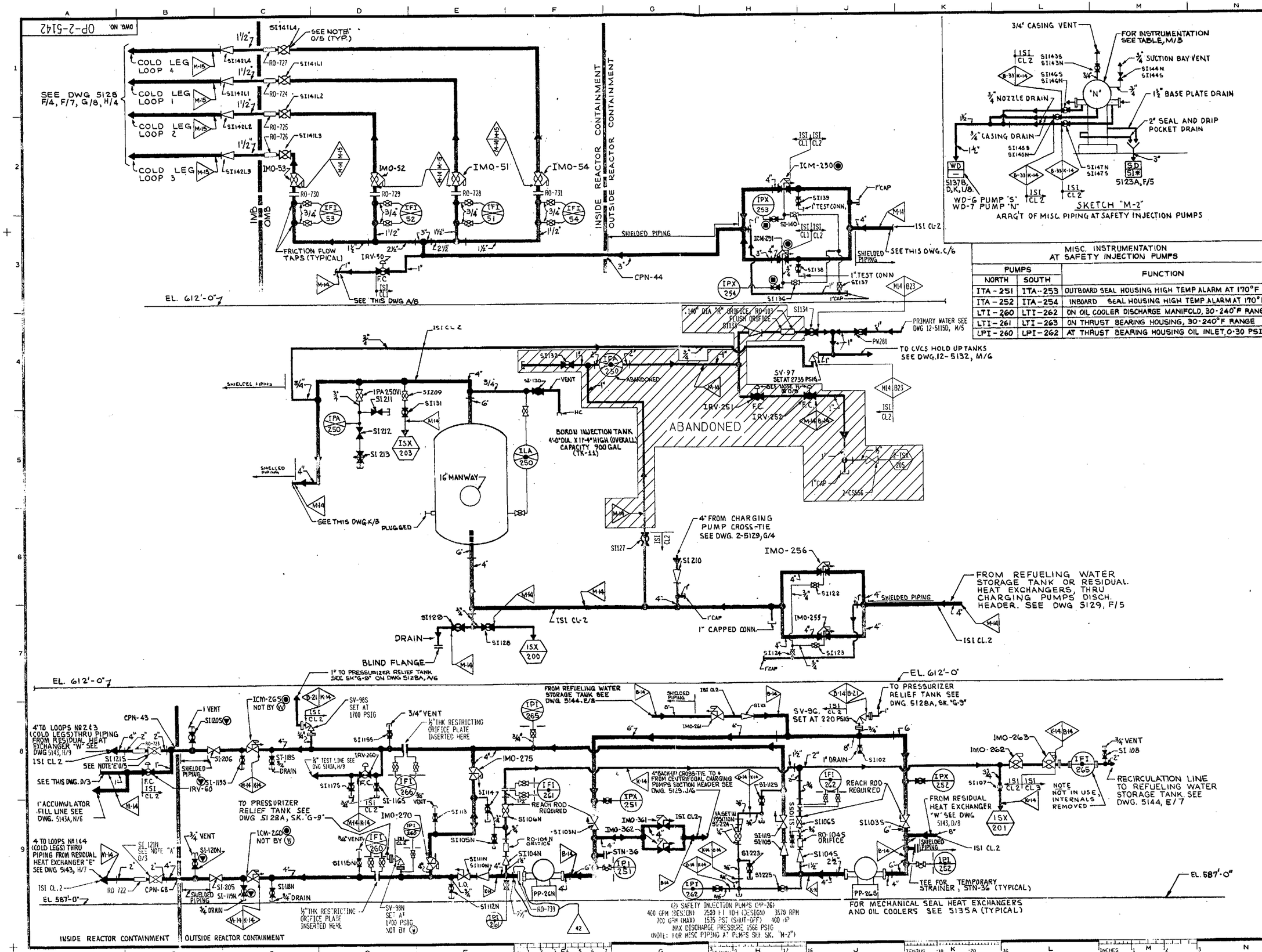

MISC. INSTRUMENTATION AT SAFETY INJECTION PUMPS

PUMPS		FUNCTION
NORTH	SOUTH	
ITA-251	ITA-253	OUTBOARD SEAL HOUSING HIGH TEMP ALARM AT 170°F
ITA-252	ITA-254	INBOARD SEAL HOUSING HIGH TEMP ALARM AT 170°F
LTI-260	LTI-262	ON OIL COOLER DISCHARGE MANIFOLD, 30-240°F RANGE
LTI-261	LTI-263	ON THRUST BEARING HOUSING, 30-240°F RANGE
LPI-260	LPI-262	AT THRUST BEARING HOUSING OIL INLET, 0-30 PSI

GENERAL NOTES

- UNLESS OTHERWISE NOTED ON THIS DRAWING:
- REFER TO DRAWING 12-5104 FOR "HAND OPERATED VALVE IDENTIFICATION NUMBERS" NOTES.
- THE UNIT PREFIX DESIGNATION FOR EACH COMPONENT IDENTIFICATION NO. IS " 2 ".

LEGEND

MAIN FLOW
AUXILIARY FLOW

(W) BY WESTINGHOUSE

FOR VALVE, INSTRUMENT, SAMPLING, PIPE MATERIAL AND OTHER SYMBOLS NOT EXPLAINED ON THIS DWG AND FOR MARK NUMBER CODES: SEE DWG 12-5103 & 12-5104

NOTE "A"
ADJUST VALVES IN FIELD TO LIMIT PUMP RUNOUT THEN LOCK IN POSITION.

NOTE "B"
ALL EQUIPMENT SEISMIC CLASS I EXCEPT AS NOTED.

NOTE "C"
FOR CODE CLASS 2 INSTRUMENT CONNECTIONS, THE ISI BOUNDARY EXTENDS TO AND INCLUDES THE FIRST ROOT VALVE.

NOTE "D"
FOR CODE CLASS 2 VENTS & DRAINS THE ISI BOUNDARY EXTENDS TO & INCLUDES THE FIRST NORMALLY CLOSED VALVE.

NOTE "E"
REFER TO DWG. 2-5123C FOR PORTIONS OF PIPING CONTAINED WITHIN LEAK DETECTION ENCLOSURES.

NOTE: J
SAFETY INJECTION PUMP LUBRICATION OIL SYSTEM IS ISI CLASS 3 AND PIPE SPEC A-12

NOTE: H
VALVES IRV-251, 252 ARE NON-FUNCTIONAL

DATE	NO.	DESCRIPTION	APPD.
4/16/00	42	INCORPORATED PER 2-DCP-558 REV. 0 ISSUED FOR RECORD	
1/5/99	41	ISSUE FOR RECORD PER 2-DCP-558, REV. 1 SKS/GNN	JHH
7-16-98	40	THIS OP DRAWING SUPERSEDES 2-5142, REV. 44, REVISED FROM NOTE "E" TO NOTE "A" AT D/2 AND VALVE SI187 AT K/8 TO SHOW CLOSED (DRAFTING ERROR), PER DCR 99-0049 CEJ/DDM	JHH
3-18-99	39	DELETED: ISI CL2 BOUNDRY AT D/3 PER C/R 99-4118 A/B 023820. OLS/CC	LB
1-8-98	38	ADDED: SET POINT 1700 PSIG TO VALVE SV-98N AT D/3. REVISED: SET POINT FROM 1750 TO 1700 PSIG FOR VALVE SV-98S AT C/8 PER 12-OCP-0828 A/B 021553. GM/C.C.	JCJ

REVISIONS

FILENAME: OP-2-5142.042
(raster file): OP-2-5142 42.cit

THIS DRAWING IS THE PROPERTY OF THE AMERICAN ELECTRIC POWER SERVICE CORP. AND IS LOANED UPON CONDITION THAT IT IS NOT TO BE REPRODUCED OR COPIED, IN WHOLE OR IN PART, OR USED FOR FURNISHING INFORMATION TO ANY PERSON WITHOUT THE WRITTEN CONSENT OF THE AEP SERVICE CORP., OR FOR ANY PURPOSE DETRIMENTAL TO THEIR INTEREST, AND IS TO BE RETURNED UPON REQUEST.

INDIANA MICHIGAN POWER COMPANY

DONALD C. COOK
NUCLEAR PLANT
BRIDGMAN MICHIGAN

FLOW DIAGRAM
EMERGENCY CORE COOLING (SIS)

DWG. NO. OP-2-5142-42

ARCH	ELEC	MECH	STR

SCALE: DRI
DATE: CHK
DESIGN ENGINEERING DIVISION:
REFER TO ORIG AND ISSUE MICROFILM FOR SIGNATURES

AEP AMERICAN ELECTRIC POWER
AEP SERVICE CORP.
1 RIVERSIDE PLAZA
COLUMBUS, OH 43215

ATTACHMENT 2 TO C0800-10

COMMITMENTS

The following table identifies those actions committed to by Indiana Michigan Power Company (I&M) in this submittal. Other actions discussed in the submittal represent intended or planned actions by I&M. They are described to the Nuclear Regulatory Commission (NRC) for the NRC's information and are not regulatory commitments.

Commitment	Completion Date
Determine a final resolution for lines that were analyzed using ASME Section III, Appendix F criteria.	Prior to the next scheduled refueling outage for each unit
Provide the results of the evaluation for Unit 1 piping sections that are subject to overpressurization	November 1, 2000