November 28, 2000

Mr. James A. Hutton
Director-Licensing
PECO Energy Company
Nuclear Group Headquarters
Correspondence Control
P. O. Box 160
Kennett Square, PA 19348

SUBJECT: SECOND 10-YEAR INTERVAL PUMP AND VALVE INSERVICE TESTING PROGRAM RELIEF REQUESTS NOS, 90-PRR-1, REVISION 0; GPRR-3, REVISION 2; 11-PRR-1, REVISION 0; GVRR-4, REVISION 2; GVRR-5, REVISION 2; 20-VRR-1, REVISION 2; AND 41-VRR-6, REVISION 0, FOR LIMERICK GENERATING STATION, UNITS 1 AND 2 (TAC NOS. MA8077 AND MA8079)

Dear Mr. Hutton:

By letter dated December 20, 1999, as supplemented September 18, 2000, PECO Energy Company submitted relief requests for its second 10-year interval inservice testing (IST) program for pumps and valves. Based on the U.S. Nuclear Regulatory Commission (NRC) staff's review of the information provided, the proposed alternative to base the Limerick Generating Station, Units 1 and 2, IST Program on the requirements of the American Society of Mechanical Engineers (ASME) Operations and Maintenance (OM) Code-1990 in lieu of the 1989 Edition of the ASME Code, Section XI, Subsections IWP and IWV, is authorized pursuant to Title 10 of the *Code of Federal Regulations* (10 CFR) Section 50.55a(a)(3)(i), based on the alternative providing an acceptable level of quality and safety.

The NRC Staff has completed its review of the requested reliefs and proposed alternative testing methods against the OM Code-1990 requirements, and our findings are delineated in the enclosed safety evaluation. For Requests for Relief Nos. 90-PRR-1, Revision 0, and GPRR-3, Revision 2, the proposed alternatives are authorized pursuant to 10 CFR 50.55a(a)(3)(i), based on the alternatives providing an acceptable level of quality and safety. For Request for Relief No. 41-VRR-6, Revision 0, the proposed alternative is authorized pursuant to 10 CFR 50.55a(a)(3)(ii) based on the determination that compliance with the specified requirements results in a hardship without a compensating increase in the level of quality and safety. For Request for Relief Nos. GVRR-4, Revision 2, and GVRR-5, Revision 2, relief is granted pursuant to 10 CFR 50.55a(f)(6)(i) based on the impracticality of performing the Code check valve exercise requirements in accordance with ASME OM Code-1990, paragraph ISTB 4.5.2(a), and in consideration of the burden on the licensee if the Code requirements were imposed on the facility. For Request of Relief 11-PRR-1, Revision 0, relief is granted pursuant to 10 CFR 50.55a(f)(6)(i), based on the impracticality of performing testing in accordance with the Code test procedure requirements of ASME OM Code-1990, paragraphs ISTB 5.2 and ISTB 5.2(b), and in consideration of the

burden on the licensee if the Code requirements were imposed on the facility. For Request for Relief 20-VRR-1, Revision 2, relief is not required as these components have been identified by the licensee as not within the scope of the Code.

This concludes our efforts on this issue and we are, therefore, closing out TAC Nos. MA8077 and MA8079.

Sincerely,

/RA/

James W. Clifford, Chief, Section 2
Project Directorate I
Division of Licensing Project Management
Office of Nuclear Reactor Regulation

Docket Nos. 50-352 and 50-353

Enclosure: Safety Evaluation

cc w/encl: See next page

burden on the licensee if the Code requirements were imposed on the facility. For Request for Relief 20-VRR-1, Revision 2, relief is not required as these components have been identified by the licensee as not within the scope of the Code.

This concludes our efforts on this issue and we are, therefore, closing out TAC Nos. MA8077 and MA8079.

Sincerely,

/RA/

James W. Clifford, Chief, Section 2
Project Directorate I
Division of Licensing Project Management
Office of Nuclear Reactor Regulation

Docket Nos. 50-352 and 50-353

Enclosure: Safety Evaluation

cc w/encl: See next page

DISTRIBUTION:

PUBLIC	GHill (4)
PDI-2 Reading File	ACRS
BBuckley	MOprendek, RGI
JClifford	EAdensam
MO'Brien (hard copy)	JShea
OGC	JColaccino

ACCESSION NO. ML003750586

OFFICE	PDI-2/PM	PDI-2/LA	EMEB	PDI-2/SC	OGC
NAME	BBuckley	MO'Brien	EImbro	JClifford	RHoefling
DATE	11/13/00	10/17/00	10/18/00	11/17/00	10/25/00

OFFICIAL RECORD COPY

Limerick Generating Station, Units 1 & 2

cc:

J. W. Durham, Sr., Esquire
Sr. V.P. & General Counsel
PECO Energy Company
2301 Market Street
Philadelphia, PA 19101

Manager-Limerick Licensing
PECO Energy Company
Nuclear Group Headquarters
Correspondence Control
P.O. Box 160
Kennett Square, PA 19348

Mr. James D. von Suskil, Vice President
Limerick Generating Station
Post Office Box 2300
Sanatoga, PA 19464

Plant Manager
Limerick Generating Station
P.O. Box 2300
Sanatoga, PA 19464

Regional Administrator, Region I
U.S. Nuclear Regulatory Commission
475 Allendale Road
King of Prussia, PA 19406

Senior Resident Inspector
U.S. Nuclear Regulatory Commission
Limerick Generating Station
P.O. Box 596
Pottstown, PA 19464

Chairman
Board of Supervisors
of Limerick Township
646 West Ridge Pike
Linfield, PA 19468

Chief-Division of Nuclear Safety
PA Dept. of Environmental Resources
P.O. Box 8469
Harrisburg, PA 17105-8469

Director-Site Engineering
Limerick Generating Station
P.O. Box 2300
Sanatoga, PA 19464

Manager-Experience Assessment
Limerick Generating Station
P.O. Box 2300
Sanatoga, PA 19464

Library
U.S. Nuclear Regulatory Commission
Region I
475 Allendale Road
King of Prussia, PA 19406

Senior Manager-Operations
Limerick Generating Station
P.O. Box 2300
Sanatoga, PA 19464

Dr. Judith Johnsrud
National Energy Committee
Sierra Club
433 Orlando Avenue
State College, PA 16803

SAFETY EVALUATION BY THE OFFICE OF NUCLEAR REACTOR REGULATION

RELATED TO THE SECOND 10-YEAR INTERVAL

PUMP AND VALVE INSERVICE TESTING PROGRAM RELIEF REQUESTS

PECO ENERGY COMPANY

LIMERICK GENERATING STATION, UNITS 1 AND 2

DOCKET NOS. 50-352 AND 50-353

1.0 INTRODUCTION

Title 10 of the *Code of Federal Regulations*, (10 CFR) Section 50.55a, requires that inservice testing (IST) of certain American Society of Mechanical Engineers Boiler and Pressure Vessel Code (B&PV) (ASME Code) Class 1, 2, and 3, pumps and valves be performed in accordance with Section XI of the ASME Code and applicable addenda, except where alternatives have been authorized or relief has been requested by the licensee and granted by the Nuclear Regulatory Commission (NRC) pursuant to paragraphs (a)(3)(i), (a)(3)(ii), or (f)(6)(i) of 10 CFR 50.55a. In proposing alternatives or requesting relief, the licensee must demonstrate that: (1) the proposed alternatives provide an acceptable level of quality and safety; (2) compliance would result in hardship or unusual difficulty without a compensating increase in the level of quality and safety; or (3) conformance is impractical for its facility. Section 50.55a authorizes the NRC to approve alternatives and to grant relief from the ASME Code requirements upon making the necessary findings. NRC guidance contained in Generic Letter (GL) 89-04, "Guidance on Developing Acceptable Inservice Testing Programs," provides alternatives to the Code requirements which are acceptable. Further guidance is given in GL 89-04, Supplement 1, and NUREG-1482, "Guidelines for Inservice Testing at Nuclear Power Plants."

The licensee is authorized in Section 2.1 of this safety evaluation (SE) to base the Limerick Generating Station, Units 1 and 2 (Limerick 1 and 2), IST Program on the requirements of the ASME Operations and Maintenance (OM) Code-1990 in lieu of the 1989 Edition of the ASME Code, Section XI, Subsections IWP and IWV, which were referenced in 10 CFR 50.55a, twelve months prior to the conclusion of the first 10-year interval. In a letter dated January 23, 1996, the NRC approved a delay in updating the Unit 1 inservice inspection and IST programs until the completion of the first 10-year interval for Unit 2. Therefore, the second 10-year interval for both Units started on January 8, 2000, and is scheduled to conclude on January 7, 2010. The NRC's findings with respect to granting relief and authorizing alternatives are given below.

2.0 GENERAL

2.1 Code Edition Alternative Relief Request

Because the start date of the second 10-year interval for the Limerick 1 and 2 IST Program was January 8, 2000, the program was required by 10 CFR 50.55a(f)(4) to comply with the requirements of the 1989 Edition of Section XI of the ASME B&PV Code. This Code was the Code referenced in 10 CFR 50.55a twelve months prior to the start of the licensee's second 10-year interval (January 8, 2000). The OM Code-1990 was not previously endorsed by the staff. However, it is the reformatted version of OM Standard, Parts 6 and 10, referenced in the 1989 Edition of the ASME Code, Section XI, Subsections IWP and IWV, which was referenced in 10 CFR 50.55a. Therefore, the alternative proposed by the licensee to use OM Code-1990 provides an acceptable level of quality and safety, and is authorized pursuant to 10 CFR 50.55a(a)(3)(i).

3.0 PUMP RELIEF REQUESTS

3.1 Relief Request No. 90-PRR-1, Revision 0

The licensee has requested relief from the ASME Code instrument accuracy and frequency response range requirements of OM Code-1990, paragraphs ISTB 4.6.1(a) and ISTB 4.6.1(b)(1) respectively, for the flow instrumentation for the main control room chilled water pumps OAP162 and OBP162. The two instruments are listed in the licensee's basis for relief. The licensee has proposed to use the installed instrumentation.

3.1.1 Licensee's Basis for Requesting Relief

The licensee states:

> For instruments to be in compliance with the code, both requirements [accuracy and range requirements] must be met, individually, for each instrument. The combination of the two requirements (i.e., accuracy equal to ±2% of full scale and full scale being up to 3 times the reference value) yields a permissible inaccuracy of ±6% of the reference value. Section 5.5.1 of NUREG-1482 states that the staff will grant relief when the combination of the range and accuracy yields a reading at least equivalent to the reading achieved from instruments that meet the Code requirements (i.e., up to ±6 percent).
>
> The permanently installed flow instruments shown in the table below are calibrated to an accuracy that exceeds the ±2% of full-scale limit. Although these instruments do not meet Code requirements, they provide better indication accuracy at the reference value than that which is permitted by the Code.
>
> The following table shows the instrument accuracy and full scale range of the flow instruments used to conduct inservice testing of the pumps listed above. The resulting instrument tolerance and indicated accuracy are calculated and also listed in the Table. The indicated accuracy at the reference value is shown

to be within the required 6 percent. Replacement of the existing instruments with Code-compliant instruments provides no safety benefit and could actually lessen the accuracy of the test results.

Instrument Number	Reference Value	Instrument Range	Instrument Accuracy	Instrument Tolerance	Indicated Accuracy
FI-90-034A	600	0 - 800	3.08%	24.64	4.11%
FI-90-034B	600	0 - 800	3.04%	24.32	4.05%

3.1.2 Proposed Alternatives

The licensee has proposed to use the instrumentation currently installed at the facility.

3.1.3 Evaluation

The ASME Code requires that analog flow instrumentation have an instrument accuracy of ±2 percent of full-scale or better and the full-scale range of each instrument cannot exceed three times the reference value. As shown in the table above, the licensee has two flow instruments which do not meet the accuracy requirement of ±2 percent of full-scale. The licensee is proposing to use the installed instrumentation because the combination of instrument accuracy and range yields, in each instance, an overall accuracy that is better than the overall accuracy of ±6% of the reference value permitted by the ASME Code.

In NUREG-1482, Section 5.5.1, the NRC staff provides guidance concerning the range and accuracy of analog instrumentation. Considering the combination of instrument accuracy and instrument range, the effective measured accuracy is ±6 percent. For a given reference value, the allowed variance from the measured value can be determined. Using the reference value and the actual instrument accuracy and range, the actual measured value can be calculated and compared with the allowed measured value. This guidance was put in place because the NRC received numerous relief requests after the instrument range requirements in the ASME Code were changed to three times the reference value. Although the NRC does not generally consider the installation or replacement of instruments a burden, and compliance with the instrument requirements in later editions of the Code is not a backfit, the use of available instrumentation that meets the intent of the ASME Code requirements provides an acceptable level of quality and safety.

For the flow instruments in the above table, the licensee has determined the actual instrument accuracy and expressed the results as a percentage of the variance from the measured value. Values within ±6 percent are acceptable. The methodology used in creating the table was consistent with the guidance provided in NUREG-1482, Section 5.5.1. The instrumentation referenced in the relief request is found to meet the intent of the ASME Code. Therefore, the proposed alternative provides an acceptable level of quality and safety.

3.1.4 Conclusion

The proposed alternative to the Code instrument accuracy and frequency response range requirements of OM Code-1990, paragraphs ISTB 4.6.1(a) and ISTB 4.6.1(b)(1) respectively for the pressure and flow instrumentation listed in the licensee's basis for relief is authorized pursuant to 10 CFR 50.55a(a)(3)(i) based on the alternative providing an acceptable level of quality and safety.

3.2 Relief Request No. GPRR-3, Revision 2

The licensee has requested relief from the ASME Code instrument accuracy requirements of OM Code-1990, 4.6.1(a), for the pumps listed below. The licensee has proposed to use an ultrasonic flow meter with an accuracy of ±5 percent to perform flow measurement for all the listed pumps.

Safeguard Piping Fill	1AP256	2AP256
	1BP256	2BP256
Diesel Fuel Oil Transfer	1AP514	2AP514
	1BP514	2BP514
	1CP514	2CP514
	1DP514	2DP514
Standby Liquid Control	1AP208	2AP208
	1BP208	2BP208
	1CP208	2CP208

3.2.1 Licensee's Basis for Requesting Relief

The licensee states:

> For instruments to be in compliance with the Code, both requirements [accuracy and range requirements] must be met, individually, for each instrument. The combination of the two requirements (i.e., accuracy equal to ±2% of full-scale and full scale being up to 3 times the reference value) yields a permissible inaccuracy of ±6% of the reference value. Section 5.5.1 of NUREG-1482 states that the staff will grant relief when the combination of the range and accuracy yields a reading at least equivalent to the reading achieved from instruments that meet the Code requirements (i.e., up to ± 6 percent).
>
> PECO Energy uses state-of-the-art ultrasonic instrumentation to measure flow for the pumps listed above. The ultrasonic instruments are calibrated to an accuracy of ± 5% of reading instead of the Code required ±2% of full-scale. Although this equipment does not meet the referenced Code requirements, it meets the intent of the Code by ensuring that data collected during inservice testing is measured to a degree of accuracy better than the ±6% which is permitted by the Code.
>
> Furthermore, the ultrasonic equipment provides more accurate data than that which would be obtained by using the alternate method of measuring tank level change as a

function of time. Installation of Code-compliant instruments in lieu of the portable ultrasonic instruments for flow measurement provides no additional safety benefit.

3.2.2 Proposed Alternatives

The licensee proposes:

> Based on Section 5.5.1 of NUREG-1482 and the information provided herein, the ultrasonic flow instrumentation which is accurate to ±5% of reading is considered acceptable in meeting the intent of the Code. No alternate testing will be performed.

3.2.3 Evaluation

The ASME Code requires that instrumentation used for pressure and flow measurement have an accuracy of ±2 percent over the calibrated range. No distinction is made in the ASME Code between the accuracy of analog and digital instrumentation. The ASME Code does specify that the measured value shall not exceed 70 percent of the range of digital instrumentation.

The licensee is using a portable ultrasonic flow meter, with an accuracy of ±5 percent of the measured value, to measure the flow of the safeguard piping fill, diesel fuel oil transfer, and standby liquid control pumps in both units. Based on the accuracy and the range of the ultrasonic flow meter, coupled with the guidance in NUREG-1482, Section 5.5.1, the NRC staff concludes that the actual accuracy of the instrument is within the actual accuracy limits of the ASME Code. In addition, the use of an ultrasonic flow meter should provide more consistent data than by calculating a flow rate based on the tank or bay level change over time for the diesel fuel oil transfer and standby liquid control pumps. Therefore, the proposed alternative provides an acceptable level of quality and safety.

3.2.4 Conclusion

The proposed alternative to the ASME Code instrument accuracy requirements of the ASME OM Code-1990, paragraph ISTB 4.6.1(a) for the pumps listed in the licensee's basis for relief is authorized pursuant to 10 CFR 50.55a(a)(3)(i) based on the alternative providing an acceptable level of quality and safety.

3.3 Relief Request No. 11-PRR-1, Revision 0

The licensee has requested relief from the ASME Code test procedure requirements of ASME OM Code-1990, paragraphs ISTB 5.2 and ISTB 5.2(b), for the ESW pumps listed below. The licensee has proposed to use pump reference curves for each individual ESW pump.

0AP548	0CP548
0BP548	0DP548

3.3.1 Licensee's Basis for Requesting Relief

The licensee states:

> The Emergency Service Water System includes a large number of variable heat loads. In addition, the temperature of the system is seasonally dependent and can vary significantly. Therefore, it is extremely difficult and highly impractical to vary the resistance of the system to establish flow or differential pressure conditions at any fixed reference point. Establishment of multiple sets of reference values would not improve the capability to set either variable at a fixed point.
>
> In order to monitor the ESW pumps for degradation and assure their operational readiness, reference pump curves will be used for inservice testing. These pump curves were prepared during flow balancing activities shortly before commercial operation of Unit 2 and include many empirical data points taken over the entire operating range of the pumps, essentially from shutoff head to approximately 2 times the maximum flow required for safe shutdown or accident mitigation. Manufacturer's representatives witnessed and concurred with the development of these curves. Although the curves were developed prior to publication of NUREG-1482, they comply with the conditions specified in Section 5.2 of that document, except as described in Relief Request No. GPRR-2.
>
> Vibration readings are taken in accordance with Paragraph ISTB 4.6.4(a). In addition to the Code required vibration readings, several additional readings are taken and analyzed in accordance with the LGS [Limerick Generating Station] Predictive Maintenance Program. Since these pumps show little variation in vibration over their normal operating range, the acceptance criteria for vibration testing complies with the requirements of Table ISTB 5.2-2a.

3.3.2 Alternative Testing

The licensee proposes:

> Pump testing is performed quarterly, using the pump curves. Flow, normally in the range of 3000 to 4750 gpm, is measured and total dynamic head is calculated from the pump discharge pressure and the level of the Spray Pond (i.e., suction). The test point is then compared to the pump curve and determined to be within the acceptance range of Table ISTB 5.2-2b (0.90 to 1.10 P_r) which is also plotted on the pump curve. Corrective action, if required, shall meet the requirements of [paragraph] ISTB 6.1.

3.3.3 Evaluation

The ASME Code requires that for a pump inservice test, specific test parameters shall be determined and recorded with the pump operating at specified test reference conditions. This is accomplished by establishing a fixed, repeatable reference value (either pressure or flow), matching that reference value during testing, and measuring and comparing the variable

reference value with acceptance criteria established in accordance with the ASME Code. If this value is outside the acceptable band, the pump is declared inoperable.

When single or multiple reference values cannot be established, the NRC has provided guidance in NUREG-1482, Section 5.2, on the use of variable reference values for flow rate and differential pressure during pump testing. If the licensee demonstrates that it is clearly impractical in a relief request to establish a fixed set of reference values, then it is appropriate to use pump curves for reference values of flow rate and differential pressure. To use this test method, the licensee must either obtain empirical data or verify the manufacturer's pump curve when the pump is in good operating condition. Using this data, the licensee can then establish alert and required action range acceptance bands based on the ASME Code acceptance criteria. The guidance also provides a number of steps that must be completed when the proposed alternative to the ASME Code is authorized to use pump curves.

The licensee has proposed to use pump reference curves over a specified range and develop required action range acceptance criteria based on the reference curves. The licensee states that the ESW system at Limerick is subject to variable heat loads, making it difficult to test at one or multiple fixed reference points. The licensee is proposing to use pump reference curves and its test methodology which complies with the guidance in Section 5.2 of NUREG-1482. The relief request suggests that it is possible to perform the ASME Code-required testing, but that it is "extremely difficult and highly impractical" which are contradictory arguments. Based on this information alone, it cannot be concluded that the testing is impractical to perform.

NRC inspectors from Region I and the Office of Nuclear Reactor Regulation conducted an engineering team inspection at Limerick in February of 2000 (reference Inspection Report 05000352/2000-001; 05000353/2000-001 dated April 21, 2000). Inservice testing of the ESW pumps was discussed specifically in this inspection report. Two issues related to the ESW pumps were documented in the inspection report: (1) failure to request relief when reference curves were implemented for the ESW system in 1991; and (2) adequacy of reference curves used to satisfy the requirements for the ESW system. The inspectors reviewed current practices and concluded that ASME Code testing of the ESW system was impractical because of the system design.

If the licensee were required to meet the ASME Code requirements, an extensive system design change would be necessary. The proposed testing provides a reasonable assurance of operational readiness because the licensee is testing these pumps at full or substantial flow conditions using the NRC guidance in NUREG-1482, Section 5.2.

3.3.4 Conclusion

Relief is granted for the ESW pumps listed above pursuant to 10 CFR 50.55a(f)(6)(i) based on the impracticality of performing testing in accordance with the ASME Code test procedure requirements of ASME OM Code-1990, paragraphs ISTB 5.2 and ISTB 5.2(b), and in consideration of the burden on the licensee if the ASME Code requirements were imposed on the facility.

4.0 VALVE RELIEF REQUESTS

4.1 Relief Request No. GVRR-4, Revision 2

The licensee has requested relief from the ASME Code check valve exercise requirements of ASME OM Code-1990, paragraph ISTB 4.5.2(a), for the check valves listed below. These valves are in the low pressure coolant injection (LPCI), core spray, and reactor core isolation cooling (RCIC) systems. The licensee has proposed to exercise each series pair of check valves as a unit and declare both valves inoperable and apply the appropriate corrective actions if the test acceptance criteria assigned to each check valve pair is not met.

49-1032	49-2032
49-1033	49-2033
49-1F064	49-2F064
49-1F065	49-2F065
51-1115A,C	51-2115A,C
51-1116A,C	51-2116A,C
52-1045A	52-2045A
52-1046A	52-2046A

4.1.1 Licensee's Basis for Requesting Relief

The licensee states:

> During normal operation, the ECCS [emergency core cooling system] and RCIC System discharge lines are maintained filled by the non safety-related Condensate Transfer System (CTS). In the event that the CTS is unavailable, the Safeguard Piping Fill System (SPFS) provides an alternate, safety-related source of pressurized fill water to the ECCS and RCIC systems.
>
> The check valves listed above are installed in the configuration described in NUREG-1482, Section 4.1.1. Each keep fill line is equipped with two simple check valves in series. There are no vents, drains, or test connections located between each pair of valves; therefore, no practical method exists to verify proper operation of the individual valves upon reversal of flow. As demonstrated herein, the installation of branch connections and valving to enable testing of these check valves individually would create an undue burden, without any increase in the level of safety or assurance that the system would be capable of performing its intended functions. The LGS [Updated Final Safety Analysis Report] UFSAR does not take credit for use of two valves in series to retard backflow.

4.1.2 Alternative Testing

The licensee proposes:

> As prescribed under the "NRC Recommendation" heading of Section 4.1.1 of NUREG-1482, each set of series check valves will be exercised quarterly in the reverse direction, as a unit, with the exception of 49-1(2)F064 and 49-l(2)F065 which will be tested on a Cold Shutdown frequency. Both valves will be declared inoperable, and will be disassembled and inspected and repaired or replaced, as necessary, if testing indicates that the valves do not close on reverse flow.

4.1.3 Evaluation

The ASME Code requires that each check valve be exercised or examined in a manner that verifies obturator travel to the closed, full-open, or partially open position required to fulfill its function. The valves in the licensee's proposed alternative are divided into pairs and are in a series configuration without installed test connections to perform individual valve testing. The licensee has further stated that their UFSAR does not require both valves to fulfill their intended safety function. The licensee has proposed to closure-test each valve pair as a unit, and declare each valve in the pair inoperable if the test fails the established test acceptance criteria. Corrective action would be applied to both valves.

The NRC has provided guidance on this issue in NUREG-1482, Section 4.1.1. If the licensee has no practical means to closure test these series check valve pairs individually, and only one valve in the pair is required to fulfill the intended safety function, then relief may be requested to test both valves as a unit. If the unit does not pass its closure test acceptance criteria, then both valves must be declared inoperable.

The staff has verified that all the valves listed in the relief request are pairs of check valves in series. The individual testing of these valve pairs is impractical because there are no intermediate test connections. It would be a burden on the licensee to install test connections for testing one of the two check valves if there was another test method which would verify that at least one of the two check valves closed. The licensee's proposed alternative testing provides a reasonable assurance of operational readiness because the testing is identical to the guidance provided by the NRC in NUREG-1482, Section 4.1.1.

4.1.4 Conclusion

Relief is granted pursuant to 10 CFR 50.55a(f)(6)(i) for the check valves listed in Section 4.1 of this SE based on the impracticality of performing the ASME Code check valve exercise requirements in accordance with ASME OM Code-1990, paragraph ISTB 4.5.2(a), and in consideration of the burden on the licensee if the ASME Code requirements were imposed on the facility.

4.2 Relief Request No. GVRR-5, Revision 2

The licensee is requesting relief from the ASME Code check valve exercise requirements of ASME OM Code-1990, paragraph ISTB 4.5.2(a), for the check valves listed below. These valves are located in the HPCI and RCIC systems and are in two sets of four valves in a series/parallel arrangement. The licensee has proposed to test each set of valves as a unit in the forward direction and test pairs of parallel check valves in the closure direction. If a test fails in either the forward or reverse direction, the valves involved in that test will be declared inoperable and the appropriate corrective actions applied.

49-1017	49-2017
49-1018	49-2018
49-1F068	49-2F068
49-1F081	49-2F081
55-1025	55-2025
55-1026	55-2026
55-1F080	55-2F080
55-1F094	55-2F094

4.2.1 Licensee's Basis for Requesting Relief

The licensee states:

> These valves are installed in a series-parallel arrangement and are not provided with any type of auxiliary operators or mechanical exercisers. The configuration used is similar in principle to the one-out-of-two, taken-twice logic arrangements used in the Reactor Protection System, and provides for a high degree of reliability on the basis that no single valve failure would prevent the valves from fulfilling their function as a group.
>
> The piping configuration does not allow for individual testing of these valves. In the forward direction, testing of all four valves as a unit will verify that the configuration can prevent the formation of a vacuum in the exhaust piping, as designed. In the reverse direction, there are sufficient test taps available to allow for the testing of each parallel set of check valves as a pair to verify closure on reverse flow. The installation of additional branch connections and valving to enable testing of these check valves individually would impose undue burden without any increase in the level of safety or assurance that the configuration would be capable of performing its intended functions.
>
> The configuration of these valves is similar in principle to the in-series check valve arrangement described in NUREG-1482, Section 4.1.1, except that the addition of the parallel feature increases reliability while decreasing the ability to test the valves individually. The LGS UFSAR does not take credit for use of the series-parallel configuration for fulfillment of the functions described above.

4.2.2 Alternative Testing

The licensee proposes:

> Forward flow testing will be performed quarterly on all 4 valves, as a unit. All four valves will be declared inoperable if the 4-valve unit fails to allow the required forward flow. Reverse flow testing of each parallel set of check valves (2 sets, 2 valves per set) will be performed quarterly. Both valves in the set will be declared inoperable if testing indicates that the valves do not close on reverse flow.

4.2.3 Evaluation

The Code requires that each check valve be exercised or examined in a manner that verifies obturator travel to the closed, full-open, or partially open position required to fulfill its function. The valves in the licensee's proposed alternative are in groups of four valves in a series/parallel arrangement with test taps both upstream and downstream of the valve group and also in a cross-tie that joins the two series groups of valves. A representative example of this configuration using valves in the HPCI system is provided in the figure below.

The licensee stated that these check valves open to equalize pressure between the HPCI and RCIC turbine exhaust lines and the suppression chamber as the steam in the piping collapses following turbine operation. They close to prevent admission of turbine exhaust steam into the suppression chamber. The licensee has further stated that their updated final safety analysis report does not require the extra redundancy of the series/parallel arrangement to fulfill their intended safety function. The licensee has proposed to perform forward flow testing on each group of four valves as a unit and declare all four valves inoperable if the test fails. Each parallel pair of valves in the four-valve group will be closure-tested quarterly and both valves in the pair will be declared inoperable if the pair fails the established test acceptance criteria.

Although the NRC has not published specific guidance on this issue, the guidance in NUREG-1482, Section 4.1.1, can be used to evaluate this proposed alternative. The guidance allows the testing of series check valves without intermediate test connections as a unit provided that only one valve is required to fulfill the safety function. If the test fails, both valves are declared inoperable and corrective actions are applied to both valves.

As shown in the figure below, the four check valves in the group cannot be tested individually in either the open or closed direction without additional test connections. If the licensee has no practical means to test the four valves individually, and only one forward flow path is required to fulfill the intended safety function, then relief may be requested to test all four valves as a unit

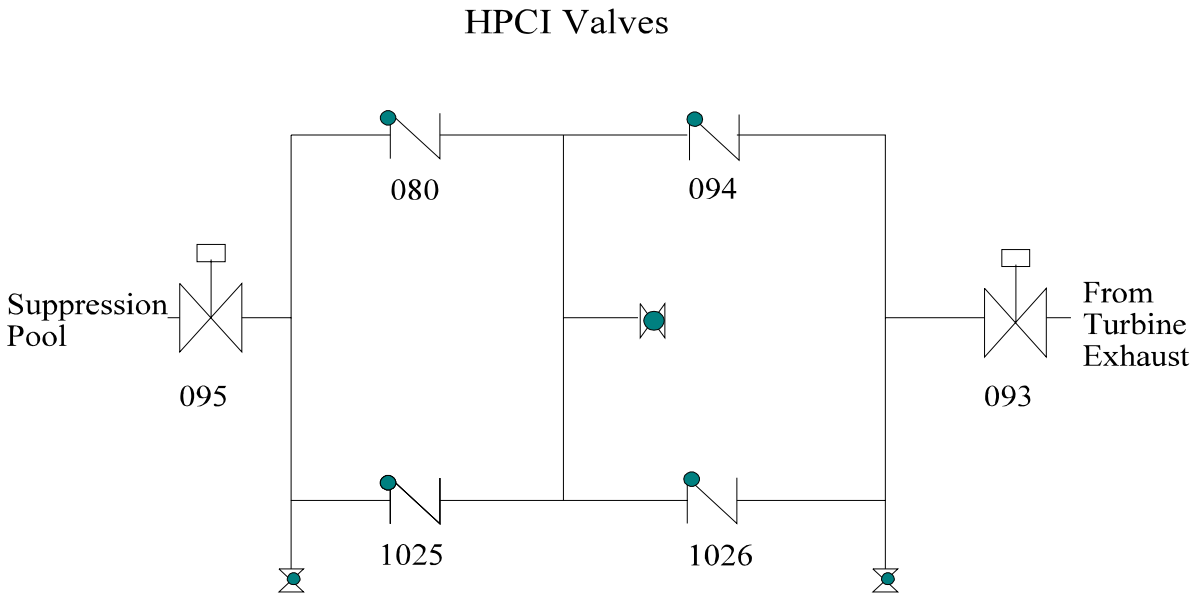

in the forward flow direction similarly to the guidance in NUREG-1482 for series check valves. If a valve pair tested in the reverse flow direction does not pass its closure test acceptance criteria, then both valves must be declared inoperable.

The staff has verified that all the valves listed in the relief request are pairs of check valves in a series/parallel arrangement. The individual testing of these valves is impractical because the piping configuration does not allow for individual valve testing. It would be a burden on the licensee to install test connections for testing one of the two check valves if there was another test method which would verify that at least one of the two check valves is closed. The licensee's proposed alternative testing provides a reasonable assurance of operational readiness because only one flow path is required to perform the intended safety function of the valve group and corrective actions will be taken on either the parallel valve pair that fails closure testing or on the entire group of four valves if there is a failure of the open test.

4.2.4 Conclusion

Relief is granted pursuant to 10 CFR 50.55a(f)(6)(i) for the check valves listed in Section 4.2 of this SE based on the impracticality of performing the ASME Code check valve exercise requirements in accordance with ASME OM Code-1990, paragraph ISTB 4.5.2(a), and in consideration of the burden on the licensee if the ASME Code requirements were imposed on the facility.

4.3 Relief Request No. 20-VRR-1, Revision 2

The licensee has requested relief from the stroke-time test and reference value requirements of ASME OM-10 Code-1990, paragraphs 4.2.4(b), and 4.2.8 respectively, for the emergency diesel generator air start valves listed below. The licensee has stated in their proposed alternative that these valves are skid-mounted and will be verified to perform their safety function during periodic diesel generator testing.

92-1302 A,B,C,D	92-2302 A,B,C,D
92-1303 A,B,C,D.	92-2303 A,B,C,D

4.3.1 Licensee's Basis for Requesting Relief

The licensee states:

> These valves are in starting air lines that are designed as ASME III Class 3, but were furnished with the Diesel Generator assemblies and are not designed to ASME Class 3 requirements. Although these valves are therefore considered to be outside the scope of 10 CFR 50.55a, they have been optionally classified as Safety Class 3 and included in the IST Program commensurate with their importance to safety.
>
> These valves are not equipped with any position indicating devices. Measurement of valve stroke time would require costly and time-consuming test methods which would impose undue burden without providing any increase in safety or assurance that the valves were capable of performing their required function.
>
> Section 3.4 of NUREG-1482 discusses "skid-mounted components and component subassemblies" and specifically mentions valves in diesel air-start subassemblies as examples. The NUREG states that testing of the major component is an acceptable means for verifying the operational readiness of the skid-mounted and component subassemblies if the licensee documents this approach in the IST Program.

4.3.2 Alternative Testing

The licensee proposes:

> Monthly surveillance testing of each Emergency Diesel Generator per LGS Units 1 and 2 Technical Specification (TS) requirements assures its ability to start and accelerate to at least 200 rpm within 10 seconds. Degradation of these valves or their failure to

operate would be indicated by an increased starting time or failure to start. Failure of any Emergency Diesel Generator to start within the specific time limit shall be evaluated to determine the cause. If it is determined that these starting air valves are suspect, they shall be declared inoperable and repaired or replaced as required.

4.3.3 Evaluation

The licensee has stated that these valves are not ASME Code, Class 3, components, but are in starting air lines that are designed to ASME Code, Class 3, requirements. In addition, they have stated that these components are skid-mounted because they are associated with the diesel skid. They have cited guidance in NUREG-1482 which allows testing of the main component to serve as an indication of degradation in the sub-components associated with the diesel skid.

Because these components at this facility are not ASME Code class components, these specific components in the diesel system are not subject to the IST of 10 CFR 50.55a. They are, however, subject to the requirements of 10 CFR Part 50, Appendix B, which would require testing of these components commensurate with their safety significance. While testing the diesel alone may not provide an indication of individual component degradation, it does meet the requirements under Appendix B for these components.

It is common for licensees to include components in their IST program which are not required to meet the requirements of components which are required by the ASME Code to be included in their IST program. These components are treated as “augmented” and are not subject to the requirements of the ASME Code. The NRC may elect to review the status of these components in a future inspection to verify that they are not within the ASME Code scope.

4.3.4 Conclusion

Relief is not required as these components have been identified by the licensee as not within the scope of the ASME Code. These components may be evaluated in a future NRC inspection.

4.4 Relief Request No. 41-VRR-6, Revision 0

The licensee has requested relief from the remote actuation requirements at reduced system pressure, which are conducted periodically and after maintenance or removal per ASME OM Code-1990, Appendix I, paragraphs I 3.2.1 and I 3.4.1(d), for certain safety and relief valves in the automatic depressurization system (ADS) listed below. The licensee has proposed to perform a combination of ASME Code and technical specification surveillance activities to substitute for the referenced safety and relief valve testing requirements in Appendix I.

PSV-41-1F013E, H, K, M, S
PSV-41-2F013E, H, K, M, S

4.4.1 Licensees Basis for Requesting Relief

The licensee states:

> The paragraphs referenced above require in-situ testing of Class 1 Main Steam Pressure Relief Valves (MSRVs) with auxiliary actuating devices. Paragraph I 3.2.1 applies to testing after installation, but prior to power generation, of valves not of the same manufacture and type. Paragraph I 3.4.1(d) provides requirements following maintenance or periodic testing of valves after they have been in service. Relief is requested from both requirements because both will apply during the 2nd Interval.
>
> The testing specified above has been determined to be detrimental to the leak tight integrity of the valves and creates a condition which could threaten plant safety. If any of these valves failed to reclose after testing, the plant would be placed in a condition equivalent to a LOCA. Depending on the severity of the failure, this could range from a small-break equivalent up to a fairly substantially sized break (i.e., 6-inch). Even relatively small amounts of leakage could require a plant shutdown based on Technical Specification leakage limits or Suppression Pool temperature requirements.
>
> BWR [Boiling Water Reactor] Owner's Group Evaluation of NUREG-0737, Item II.K.3.16, "Reduction of Challenges and Failures of Relief Valves" recommended that the number of ADS openings be reduced as much as possible. Recent ASME Code development has recognized that unnecessary challenges to ADS valves should be avoided. NUREG-1482, Section 4.3.4, references NUREG-0123 and NUREG-0626, in which the NRC staff also recommended reducing the number of challenges to dual-function ADS valves.
>
> Adequate demonstration of ADS/SRV [safety relief valve] operability is still provided by periodic SRV testing to ASME OM Code-1990, Appendix I, and additional ADS surveillance testing.

4.4.2 Alternative Testing

The licensee proposes:

> The testing described in this section includes both Code-compliant and alternate (TS [technical specification] surveillance) testing in order to present an integral description of the program of tests applied to ADS valves.
>
> The valves covered by this relief request are pilot-actuated safety/relief valves. Following their placement into service, these valves shall be periodically tested in accordance with all applicable requirements of Appendix I of the ASME OM Code-1990 for Class 1 Main Steam Pressure Relief Valves with auxiliary actuating devices, except as stated in this relief request. In accordance with Technical Specification Surveillance Requirement 4.4.2.2, once per 24 months, at least ½ of the safety relief valves shall be removed, set pressure tested and reinstalled or replaced with spares that have been previously set pressure tested. Testing shall be performed on the entire valve, including

the main seat and pilot assemblies, at a certified test facility, using steam as the test medium.

The as-found set pressure testing of the removed valves in accordance with ASME OM Code-1990 ensures that the main disc can freely operate.

In addition the following surveillance testing is performed on the ADS valves:

A. MSRV Cyclic Test
This test, performed each refuel and each time maintenance is performed on the SRV, verifies proper operation of the ADS solenoid valves, air operator and pilot assembly.

B. ADS Leak Test
This test, performed each refuel and each time maintenance is performed on the ADS valve, verifies that ADS instrument gas/accumulator leakage is low enough to ensure that there will be sufficient pneumatic pressure for design basis ADS/SRV operation.

C. ADS Logic System Functional Testing
Division 1 and 3 ADS logic system functional testing as required by TS Sections 3.3.3 and 4.5.ld.2a verifies the ECCS logic for actuating the ADS, not including actual stroking of the instrument gas/accumulator solenoids.

The combined ASME OM Code-1990, Appendix I and Technical Specification surveillance tests described above verify all required ADS critical component performance requirements.

4.4.3 Evaluation

The ASME OM Code-1990, requires in Appendix I, paragraph I 3.4.1, that remote actuation at reduced system pressure be performed on each Class 1 MSRV with an auxiliary actuating device which has been maintained or refurbished in place, removed for maintenance and testing, or both, and reinstalled prior to resumption of electric power generation. A similar requirement is also in Appendix I, paragraph I 3.2.1 (referenced in paragraph I 2), for Class 1 MSRVs with an auxiliary actuating device which has been replaced with a valve not of the same manufacturer and type. Both of these requirements apply to Limerick 1 and 2 because the licensee is required by their TSs to replace at least half of the MSRVs each refueling outage and the current Target Rock 2 stage valves will be replaced by Target Rock 3 stage valves. Therefore, the evaluation of the proposed alternative will apply to both ASME Code requirements.

The licensee has referenced industry and NRC documents which recommend reducing the number of challenges to ADS valves. These documents indicate that the ASME Code requirement to perform in-situ exercising of main steam relief valves with an auxiliary actuating device (which include relief valves that perform the ADS function) may contribute to undesirable relief valve leakage and could result in spurious actuation of the valves during power operation

and/or failure to reseat, increased use of residual heat removal for suppression pool cooling, decreased generating capacity, and increased radiation hazard. These factors result in a hardship for the licensee to perform the ASME Code exercise test requirement of remote actuation at reduced system pressure if there is an alternate test method that satisfies the intent of the ASME Code requirement.

The licensee's current TSs require that at least half of the relief valves be removed, set pressure tested, and reinstalled or replaced with spares which have been previously set pressure tested. In addition, an MSRV cyclic test is performed each refueling outage and each time maintenance is performed on the relief valve. This test exercises the solenoid valve, air operator, and the pilot assembly of the relief valve. These two activities provide a reasonable assurance of operational readiness because the combination of the two activities provides a suitable alternative to the ASME Code requirements.

4.4.4 Conclusion

The proposed alternative to the remote actuation requirements at reduced system pressure which are conducted periodically and after maintenance or removal of Appendix I, paragraphs I 3.2.1 and I 3.4.1(d), respectively, for the safety and relief valves in the automatic depressurization system listed in Section 4.4 of this SE is authorized pursuant to 10 CFR 50.55a(a)(3)(ii) based on the determination that the compliance with the specified requirements results in a hardship without a compensating increase in the level of quality and safety.

5.0 CONCLUSION

In Relief Request 90-PRR-1, Revision 0, the proposed alternative to the ASME Code instrument accuracy and frequency response range requirements of ASME OM Code-1990, paragraphs ISTB 4.6.1(a) and ISTB 4.6.1(b)(1), respectively, for the pressure and flow instrumentation listed in Section 3.1.1 of this SE is authorized pursuant to 10 CFR 50.55a(a)(3)(i) based on the alternative providing an acceptable level of quality and safety.

In Relief Request GPRR-3, Revision 2, the proposed alternative to the ASME Code instrument accuracy requirements of ASME OM Code-1990, paragraph ISTB 4.6.1(a), for the pumps listed in Section 3.2 of this SE is authorized pursuant to 10 CFR 50.55a(a)(3)(i) based on the alternative providing an acceptable level of quality and safety.

In Relief Request 41-VRR-6, Revision 0, the proposed alternative to the remote actuation requirements at reduced system pressure, which are conducted periodically and after maintenance or removal of ASME OM Code-1990, Appendix I, paragraphs I 3.2.1 and I 3.4.1(d), respectively, for the safety and relief valves in the automatic depressurization system listed in Section 4.4 of this SE is authorized pursuant to 10 CFR 50.55a(a)(3)(ii) based on the determination that the compliance with the specified requirements results in a hardship without a compensating increase in the level of quality and safety.

In Relief Request 11-PRR-1, Revision 0, relief is granted for the ESW pumps listed in Section 3.3 of this SE pursuant to 10 CFR 50.55a(f)(6)(i) based on the impracticality of performing testing in accordance with the ASME Code test procedure requirements of ASME

OM Code-1990, paragraphs ISTB 5.2 and ISTB 5.2(b), and in consideration of the burden on the licensee if the ASME Code requirements were imposed on the facility.

In Relief Request GVRR-4, Revision 2, relief is granted pursuant to 10 CFR 50.55a(f)(6)(i) for the check valves listed in Section 4.1 of this SE based on the impracticality of performing the ASME Code check valve exercise requirements in accordance with ASME OM Code-1990, paragraph ISTB 4.5.2(a), and in consideration of the burden on the licensee if the ASME Code requirements were imposed on the facility.

In Relief Request GVRR-5, Revision 2, relief is granted pursuant to 10 CFR 50.55a(f)(6)(i) for the check valves listed in Section 4.2 of this SE based on the impracticality of performing the ASME Code check valve exercise requirements in accordance with ASME OM Code-1990, paragraph ISTB 4.5.2(a), and in consideration of the burden on the licensee if the ASME Code requirements were imposed on the facility.

In Relief Request 20-VRR-1, Revision 2, relief is not required as these components have been identified by the licensee as not within the scope of the ASME Code.

Principal Contributors: J. Colaccino
B. Buckley

Date: November 28, 2000