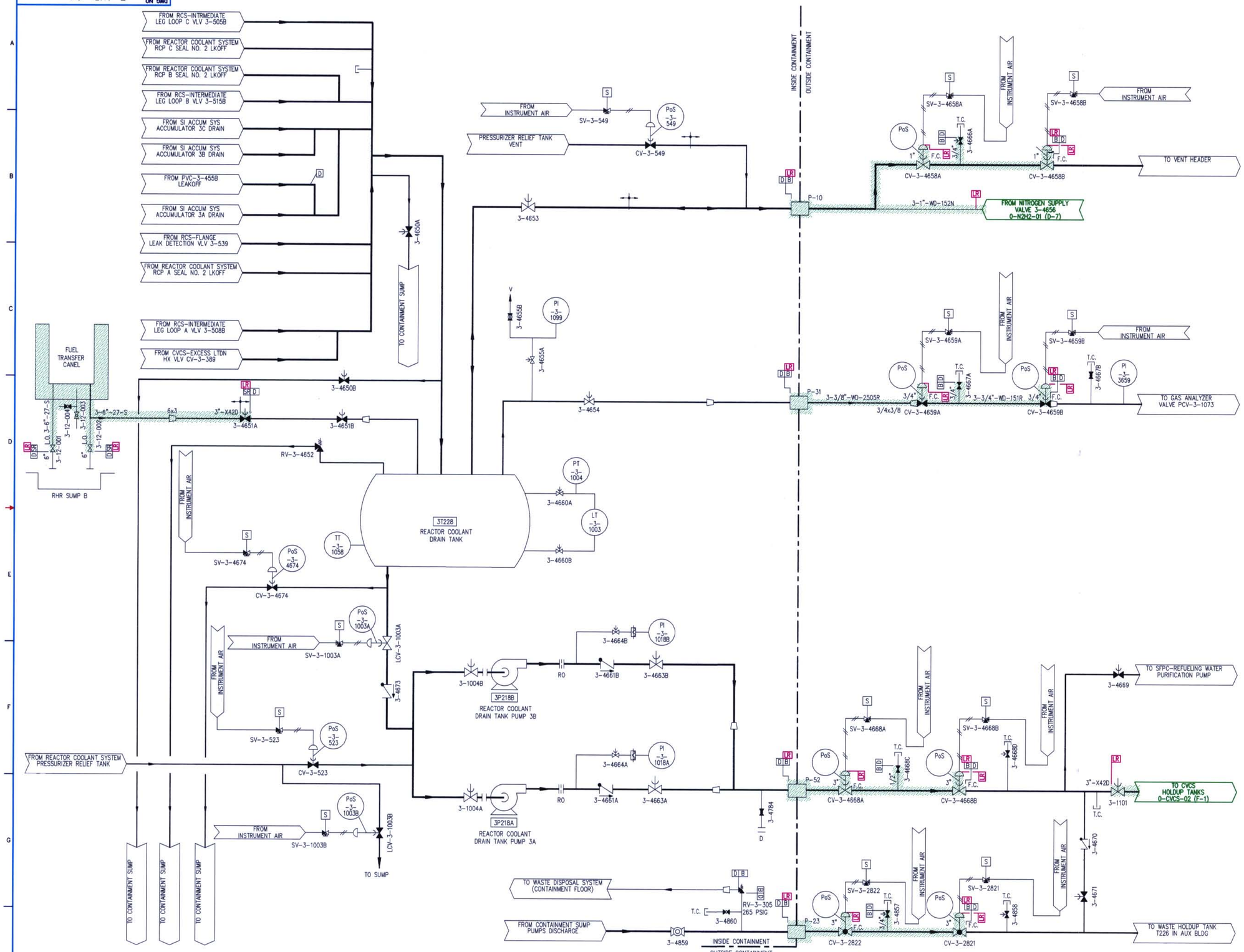

D-141

NOTES:

1. FOR GENERAL NOTES & LEGEND SEE DWG NO. 0-NOTES-01.

FPL	WASTE DISPOSAL	FLORIDA POWER & LIGHT TURKEY POINT NUCLEAR UNIT 3 LICENSE RENEWAL BOUNDARY DRAWING
		DRAWING NUMBER: 3-WD-01 — REVISION: 0

3WD01.DWG