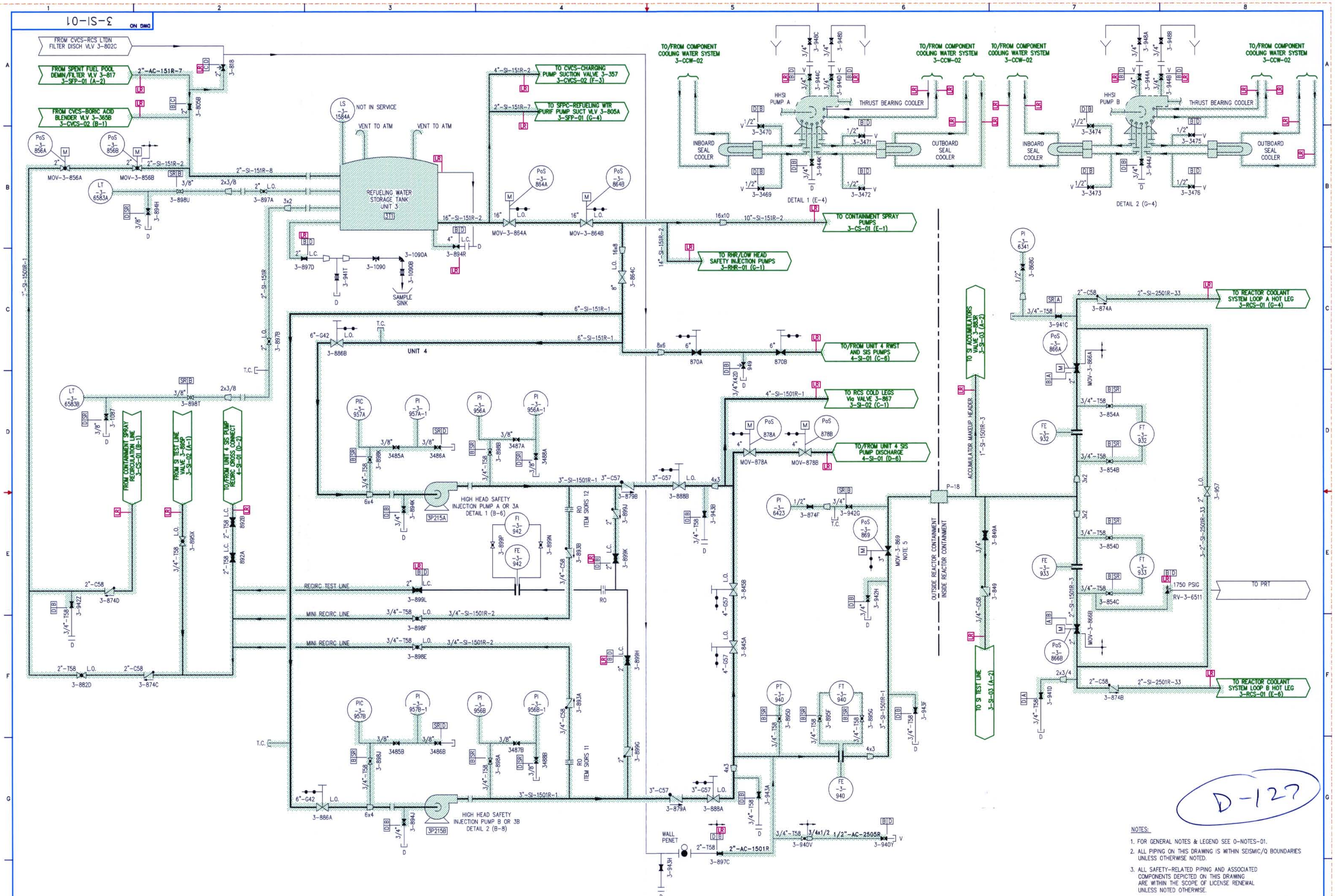

NOTES:

1. FOR GENERAL NOTES & LEGEND SEE 0-NOTES-01.
2. ALL PIPING ON THIS DRAWING IS WITHIN SEISMIC/Q BOUNDARIES UNLESS OTHERWISE NOTED.
3. ALL SAFETY-RELATED PIPING AND ASSOCIATED COMPONENTS DEPICTED ON THIS DRAWING ARE WITHIN THE SCOPE OF LICENSE RENEWAL UNLESS NOTED OTHERWISE.

FPL

SAFETY INJECTION

FLORIDA POWER & LIGHT
TURKEY POINT NUCLEAR UNIT 3

LICENSE RENEWAL BOUNDARY DRAWING

DRAWING NUMBER	REVISION
3-SI-01	0

3SI01.DWG