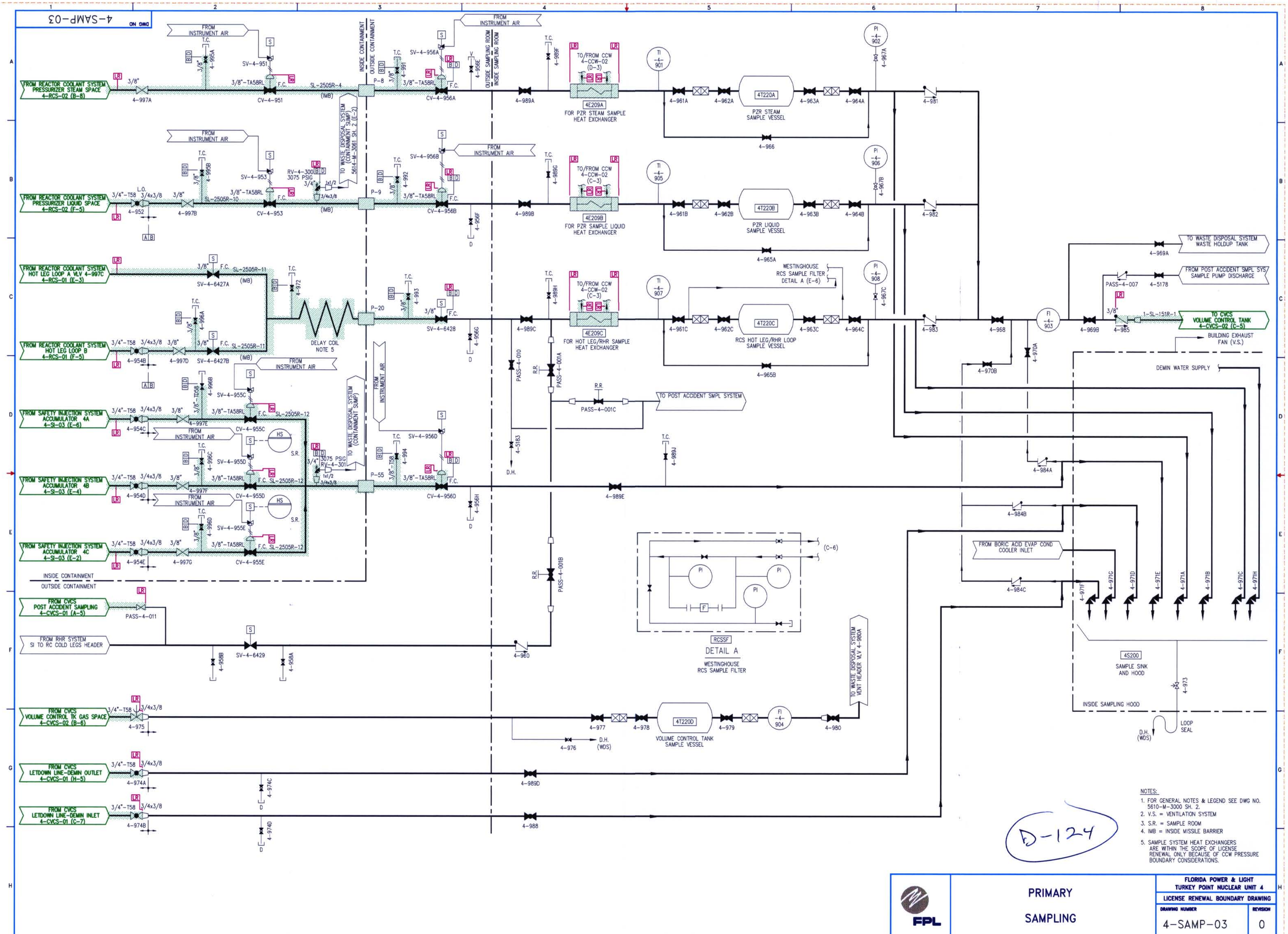

NOTES:

1. FOR GENERAL NOTES & LEGEND SEE DWG NO. 5610-M-3000 SH. 2.
2. V.S. = VENTILATION SYSTEM
3. S.R. = SAMPLE ROOM
4. IMB = INSIDE MISSILE BARRIER
5. SAMPLE SYSTEM HEAT EXCHANGERS ARE WITHIN THE SCOPE OF LICENSE RENEWAL ONLY BECAUSE OF CCW PRESSURE BOUNDARY CONSIDERATIONS.

D-124

FPL

PRIMARY SAMPLING

FLORIDA POWER & LIGHT
TURKEY POINT NUCLEAR UNIT 4

LICENSE RENEWAL BOUNDARY DRAWING

DRAWING NUMBER	REVISION
4-SAMP-03	0

4SAMP03.DWG