DWG NO 4-RHR-01

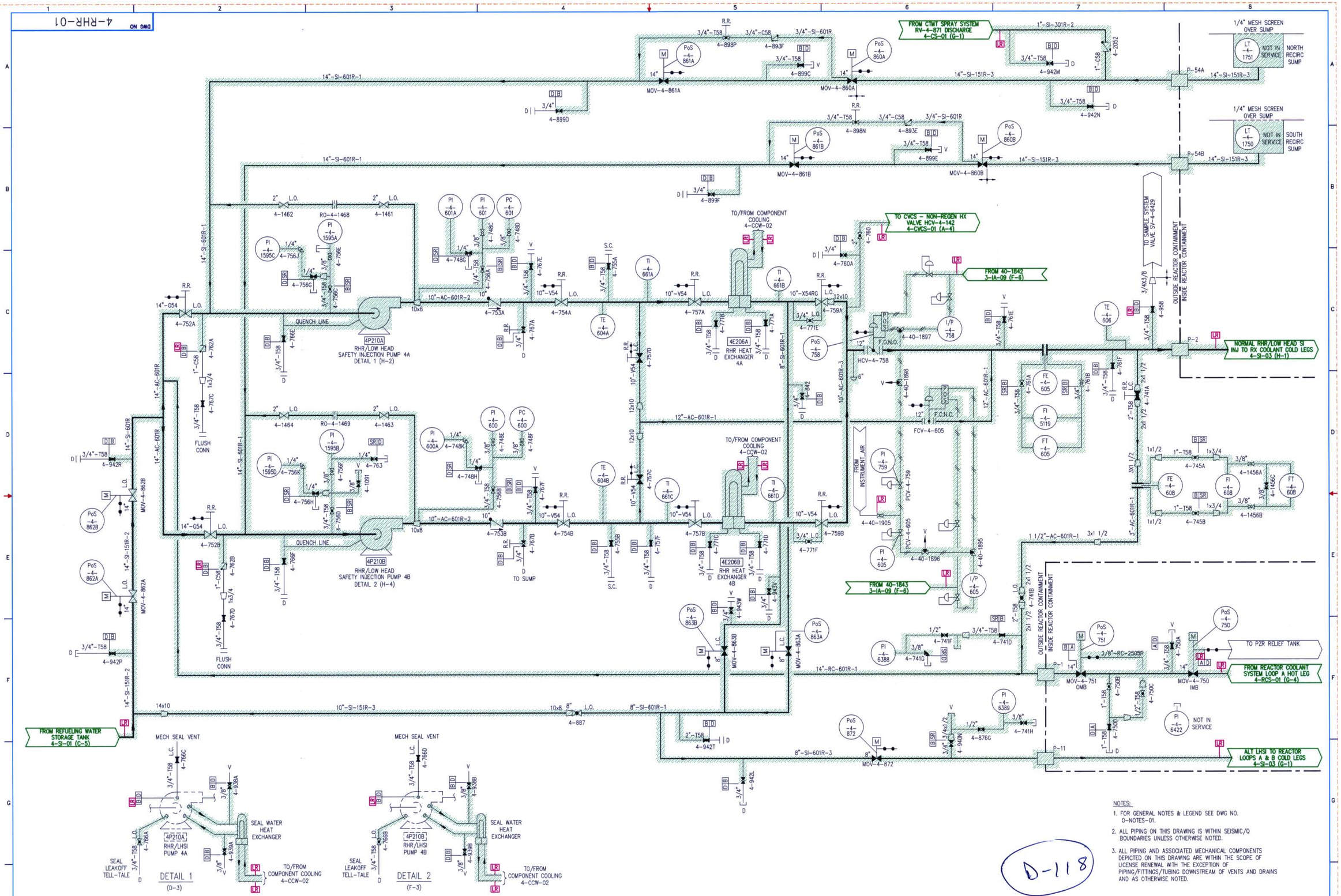

NOTES:

1. FOR GENERAL NOTES & LEGEND SEE DWG NO. 0-NOTES-01.
2. ALL PIPING ON THIS DRAWING IS WITHIN SEISMIC/Q BOUNDARIES UNLESS OTHERWISE NOTED.
3. ALL PIPING AND ASSOCIATED MECHANICAL COMPONENTS DEPICTED ON THIS DRAWING ARE WITHIN THE SCOPE OF LICENSE RENEWAL WITH THE EXCEPTION OF PIPING/FITTINGS/TUBING DOWNSTREAM OF VENTS AND DRAINS AND AS OTHERWISE NOTED.

D-118

FPL

RESIDUAL HEAT REMOVAL

FLORIDA POWER & LIGHT
TURKEY POINT NUCLEAR UNIT 4

LICENSE RENEWAL BOUNDARY DRAWING

DRAWING NUMBER	REVISION
4-RHR-01	0

4RHR01.DWG