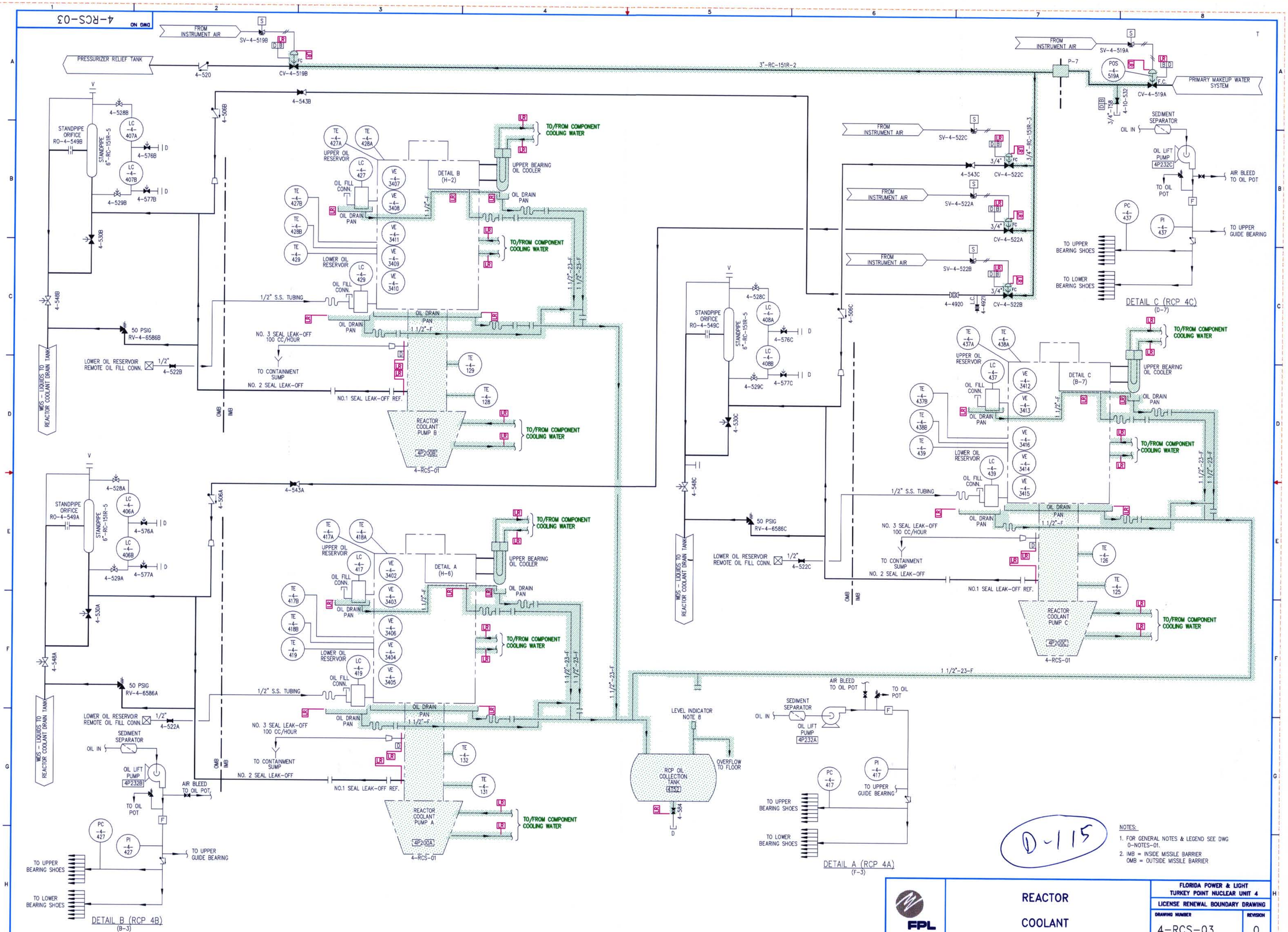

NOTES:

1. FOR GENERAL NOTES & LEGEND SEE DWG 0-NOTES-01.
2. IMB = INSIDE MISSILE BARRIER
   OMB = OUTSIDE MISSILE BARRIER

FPL

REACTOR COOLANT

FLORIDA POWER & LIGHT
TURKEY POINT NUCLEAR UNIT 4

LICENSE RENEWAL BOUNDARY DRAWING

DRAWING NUMBER	REVISION
4-RCS-03	0

4RCS03.DWG