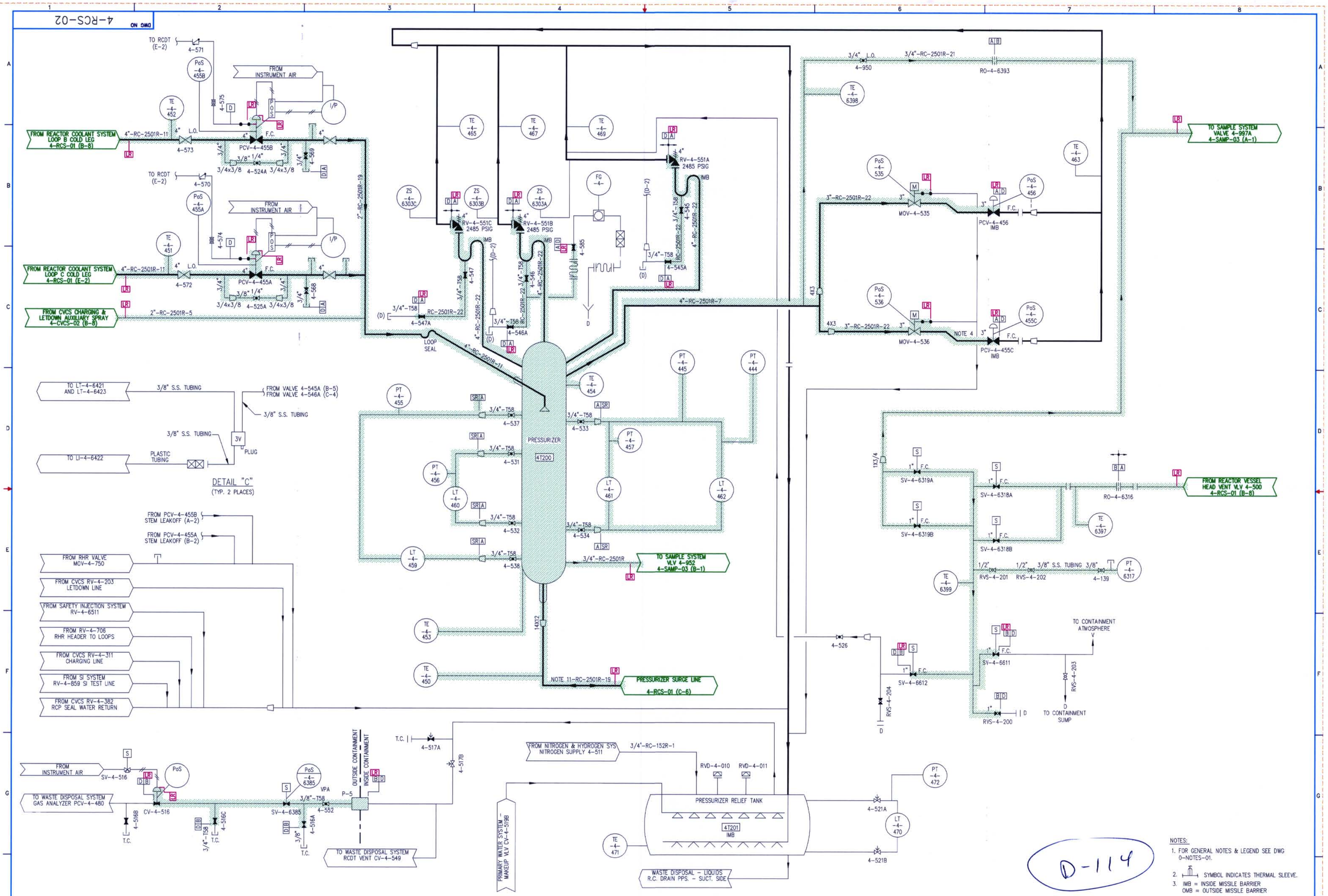

D-114

NOTES:

1. FOR GENERAL NOTES & LEGEND SEE DWG 0-NOTES-01.
2. SYMBOL INDICATES THERMAL SLEEVE.
3. IMB = INSIDE MISSILE BARRIER
   OMB = OUTSIDE MISSILE BARRIER

FPL

REACTOR COOLANT

FLORIDA POWER & LIGHT
TURKEY POINT NUCLEAR UNIT 4

LICENSE RENEWAL BOUNDARY DRAWING

DRAWING NUMBER	REVISION
4-RCS-02	0

4RCS02.DWG