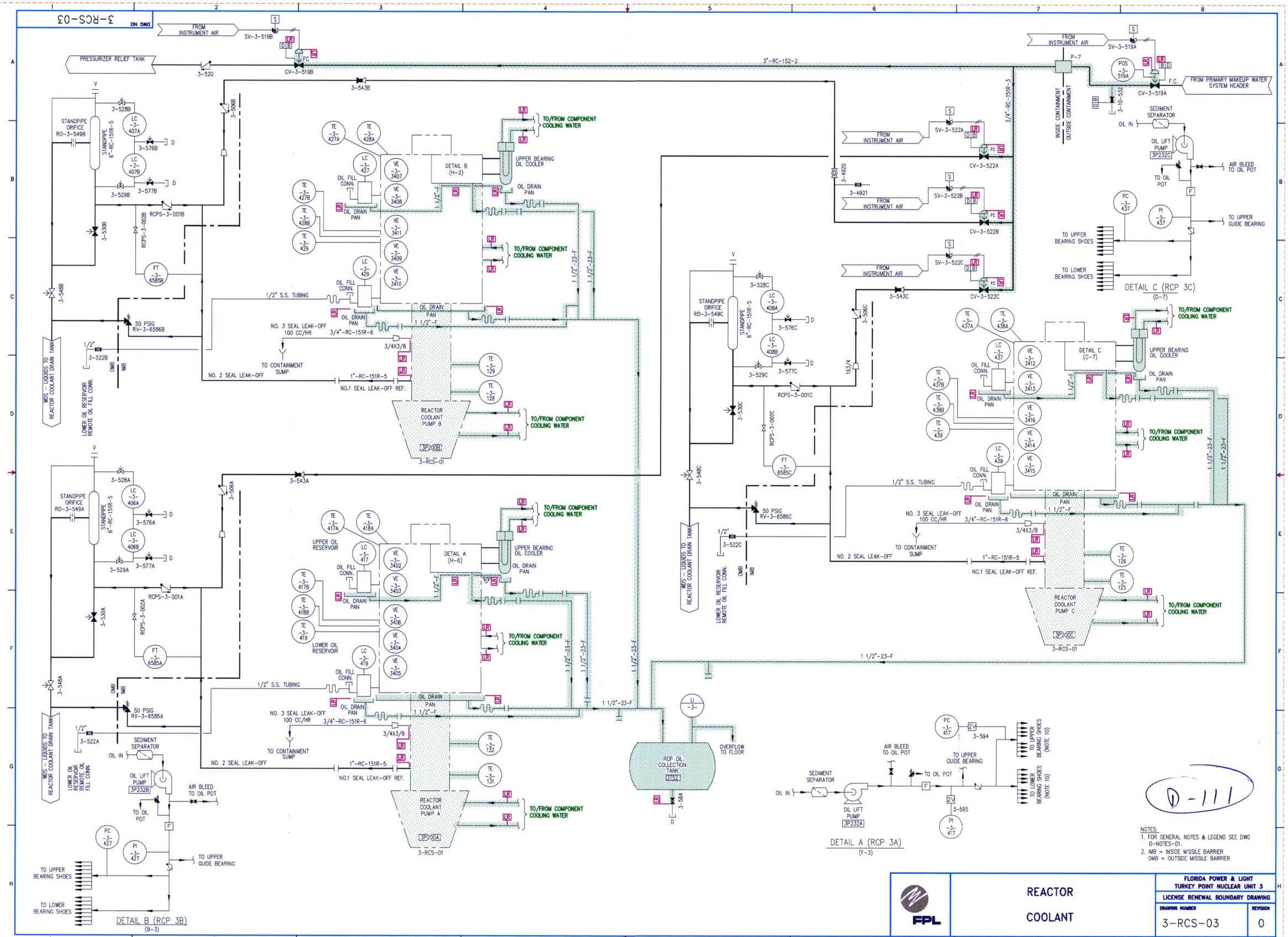

NOTES:
1. FOR GENERAL NOTES & LEGEND SEE DWG 0-NOTES-01.
2. IMB = INSIDE MISSILE BARRIER
OMB = OUTSIDE MISSILE BARRIER

FPL

REACTOR COOLANT

FLORIDA POWER & LIGHT
TURKEY POINT NUCLEAR UNIT 3
LICENSE RENEWAL BOUNDARY DRAWING

DRAWING NUMBER	REVISION
3-RCS-03	0

3RCS03.DWG