DWG NO 0-PAMC-01

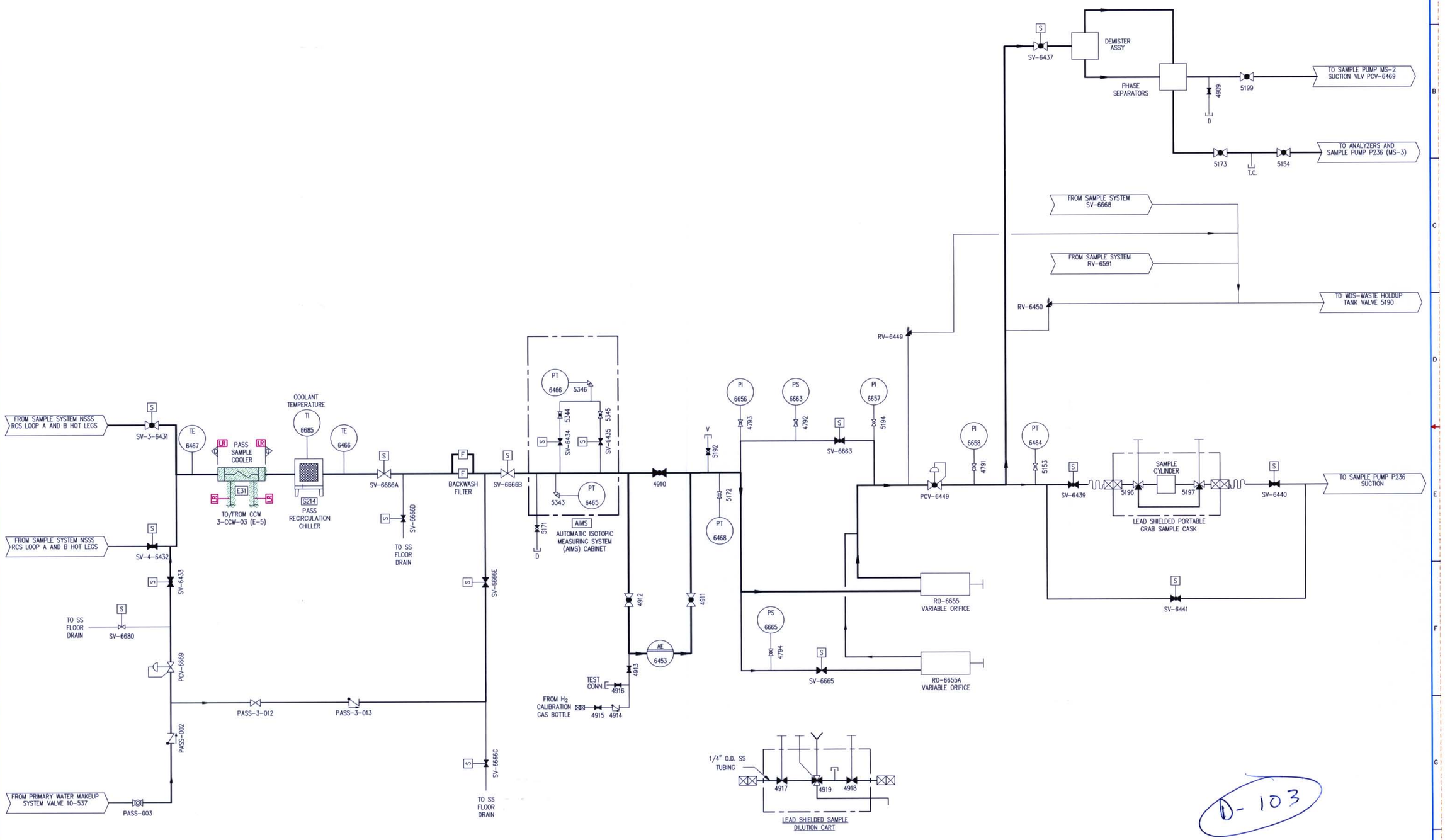

D-103

NOTES:

1. FOR GENERAL NOTES & LEGEND SEE DWG NO. 0-NOTES-01.

FPL

CONTAINMENT POST ACCIDENT MONITORING & CONTROL

FLORIDA POWER & LIGHT
TURKEY POINT NUCLEAR UNITS 3 & 4

LICENSE RENEWAL BOUNDARY DRAWING

DRAWING NUMBER	REVISION
0-PAMC-01	0

0PAMC01.DWG