DWG NO 4-MS-02

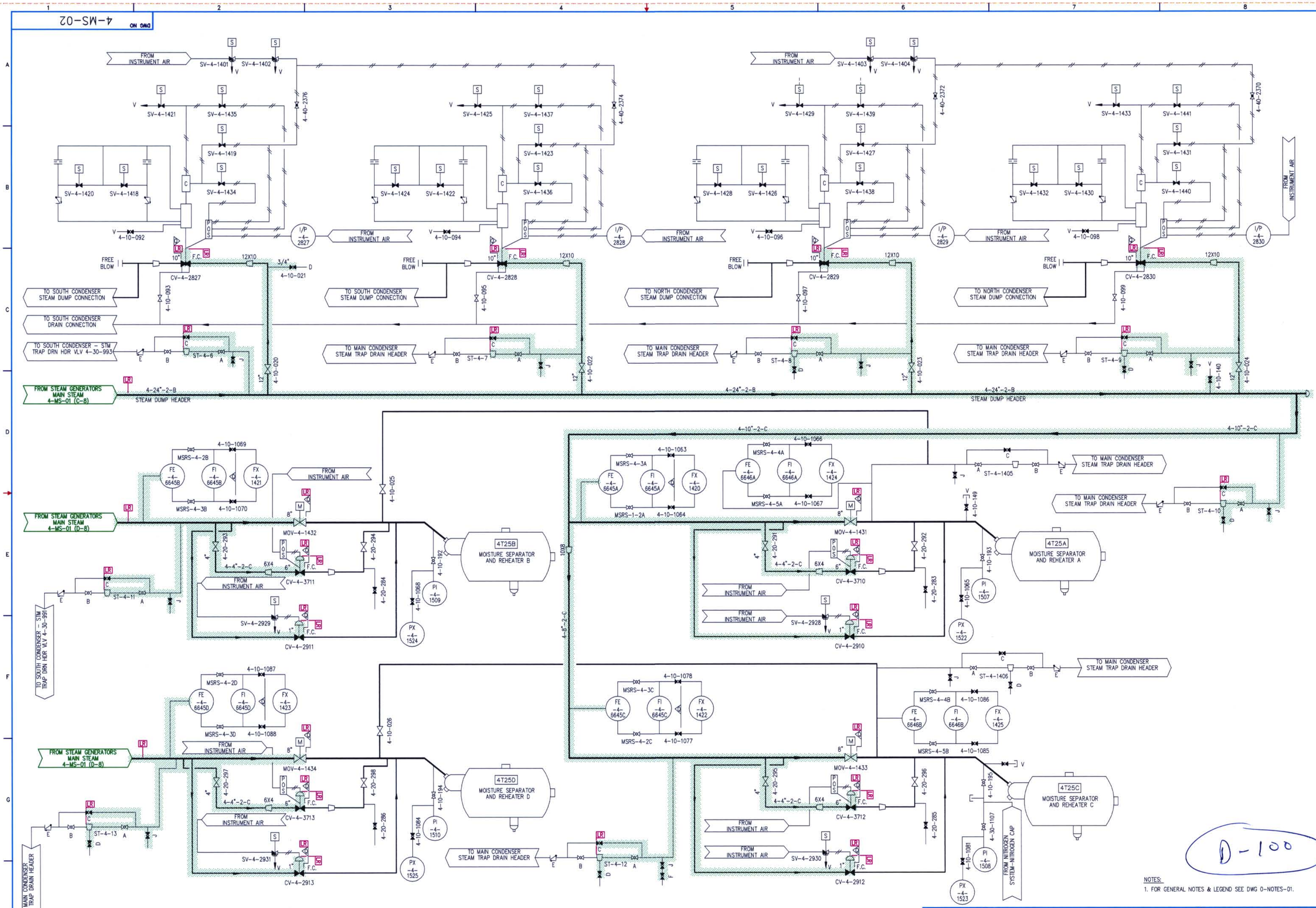

NOTES:

1. FOR GENERAL NOTES & LEGEND SEE DWG O-NOTES-01.

FPL

MAIN STEAM

FLORIDA POWER & LIGHT
TURKEY POINT NUCLEAR UNIT 4

LICENSE RENEWAL BOUNDARY DRAWING

DRAWING NUMBER	REVISION
4-MS-02	0

4MS02.DWG