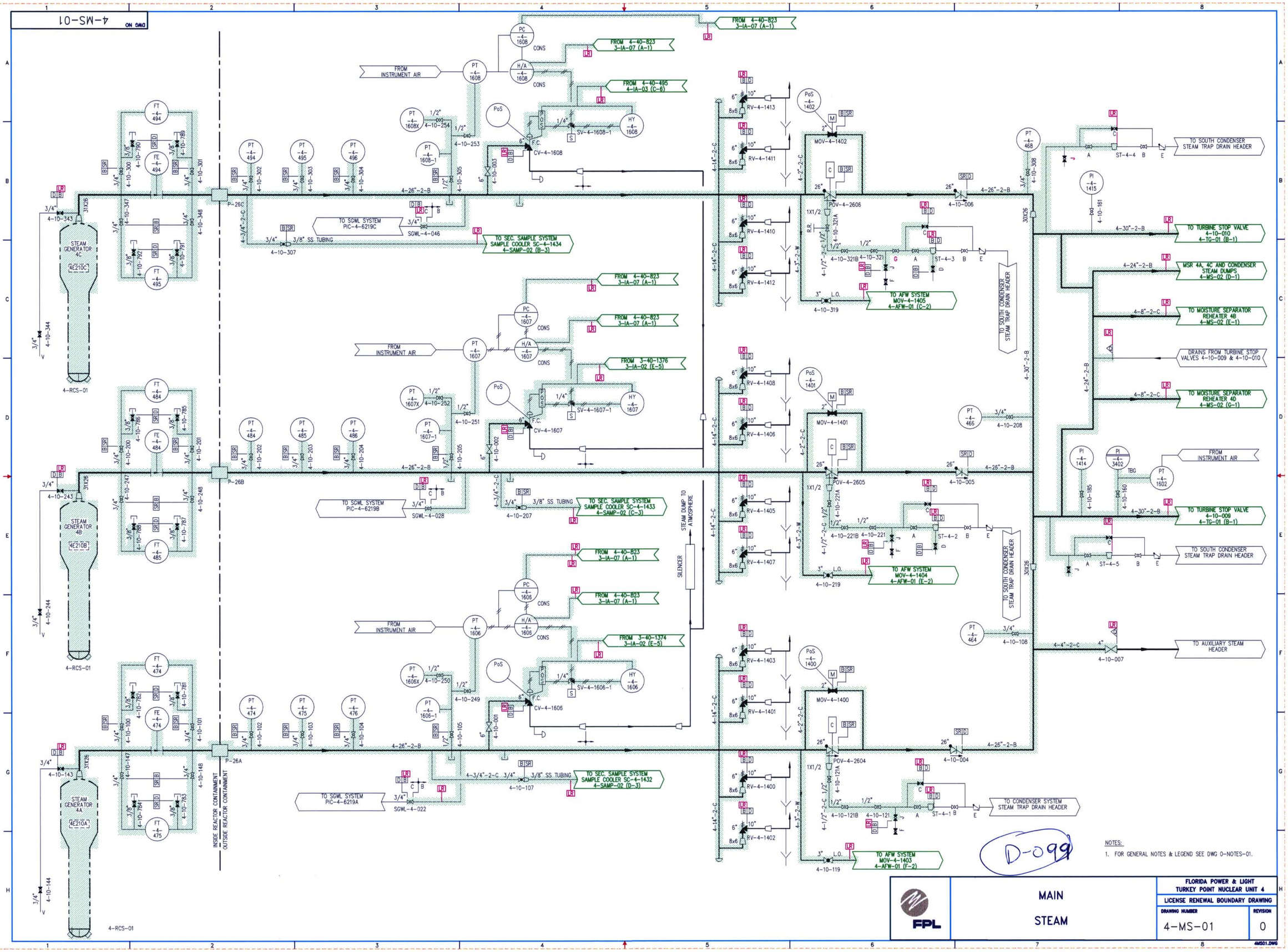

NOTES:

1. FOR GENERAL NOTES & LEGEND SEE DWG 0-NOTES-01.

FPL	MAIN STEAM	FLORIDA POWER & LIGHT TURKEY POINT NUCLEAR UNIT 4 LICENSE RENEWAL BOUNDARY DRAWING
		DRAWING NUMBER: 4-MS-01 — REVISION: 0

4MS01.DWG