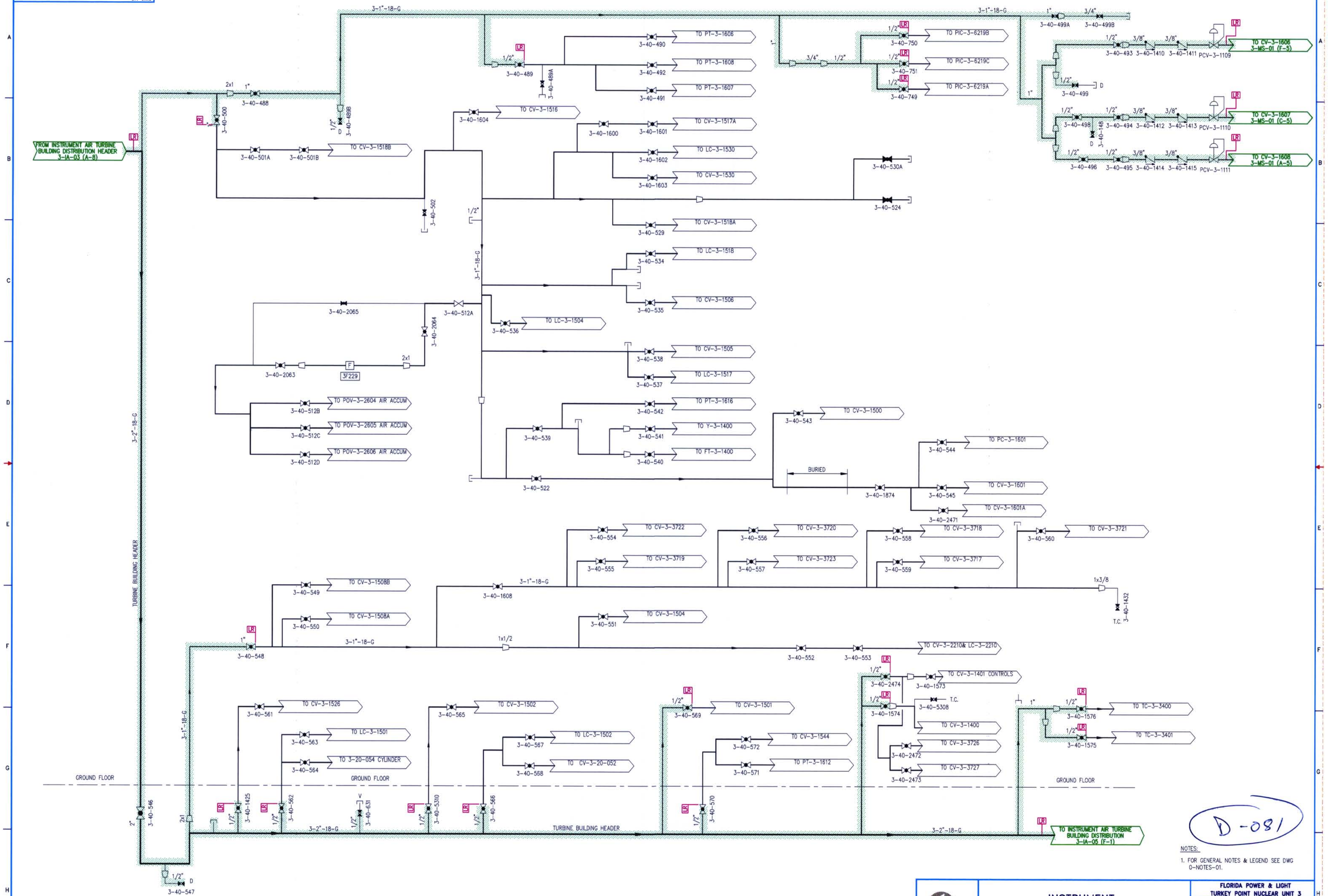

NOTES:

1. FOR GENERAL NOTES & LEGEND SEE DWG 0-NOTES-01.

FPL

INSTRUMENT AIR

FLORIDA POWER & LIGHT
TURKEY POINT NUCLEAR UNIT 3

LICENSE RENEWAL BOUNDARY DRAWING

DRAWING NUMBER	REVISION
3-IA-04	0

3IA04.DWG