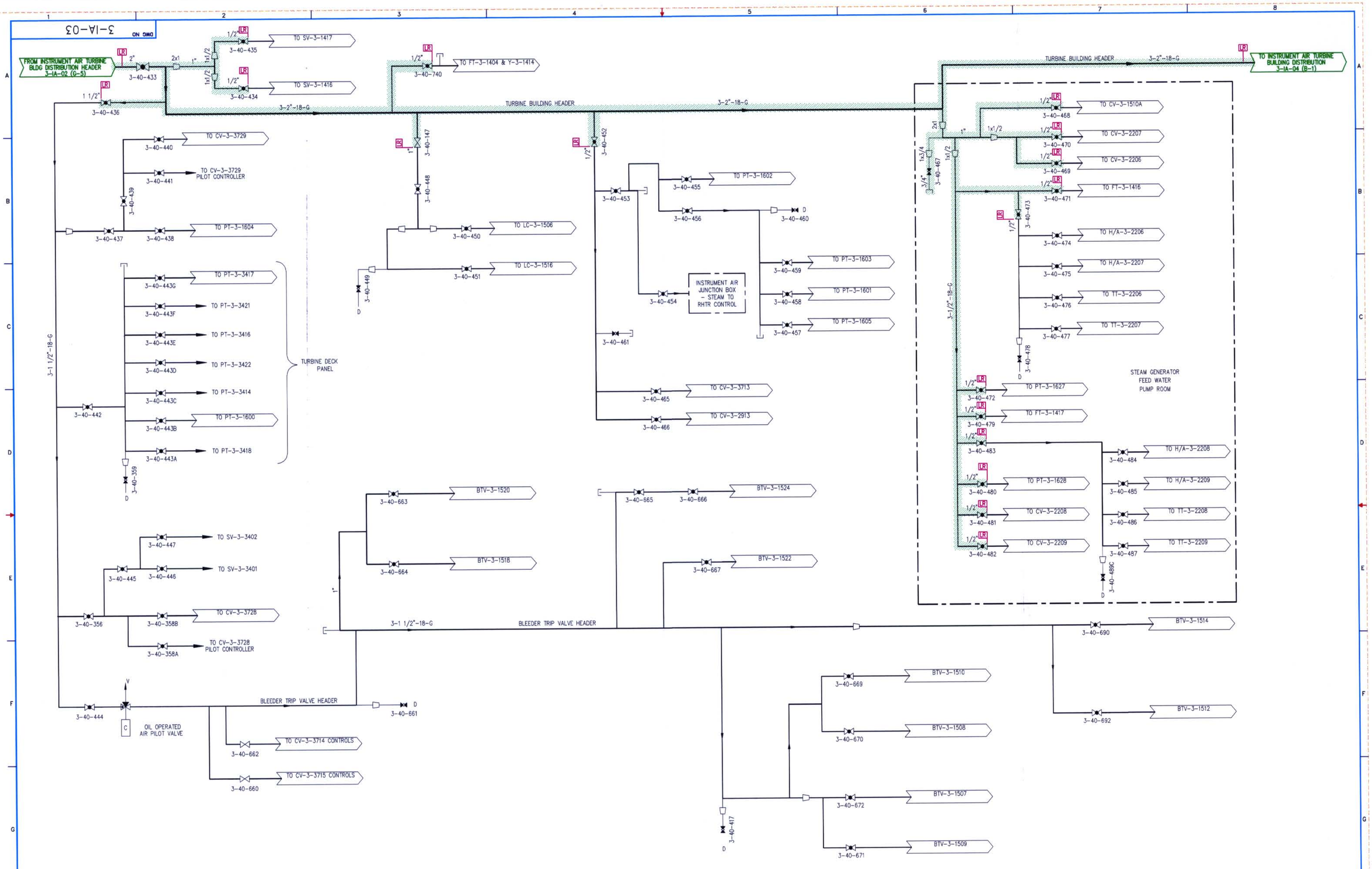


D-080

NOTES:

1. FOR GENERAL NOTES & LEGEND SEE DWG 0-NOTES-01.

FPL

INSTRUMENT AIR

FLORIDA POWER & LIGHT
TURKEY POINT NUCLEAR UNIT 3

LICENSE RENEWAL BOUNDARY DRAWING

| DRAWING NUMBER | REVISION |
|---|---|
| 3-IA-03 | 0 |

3IA03.DWG