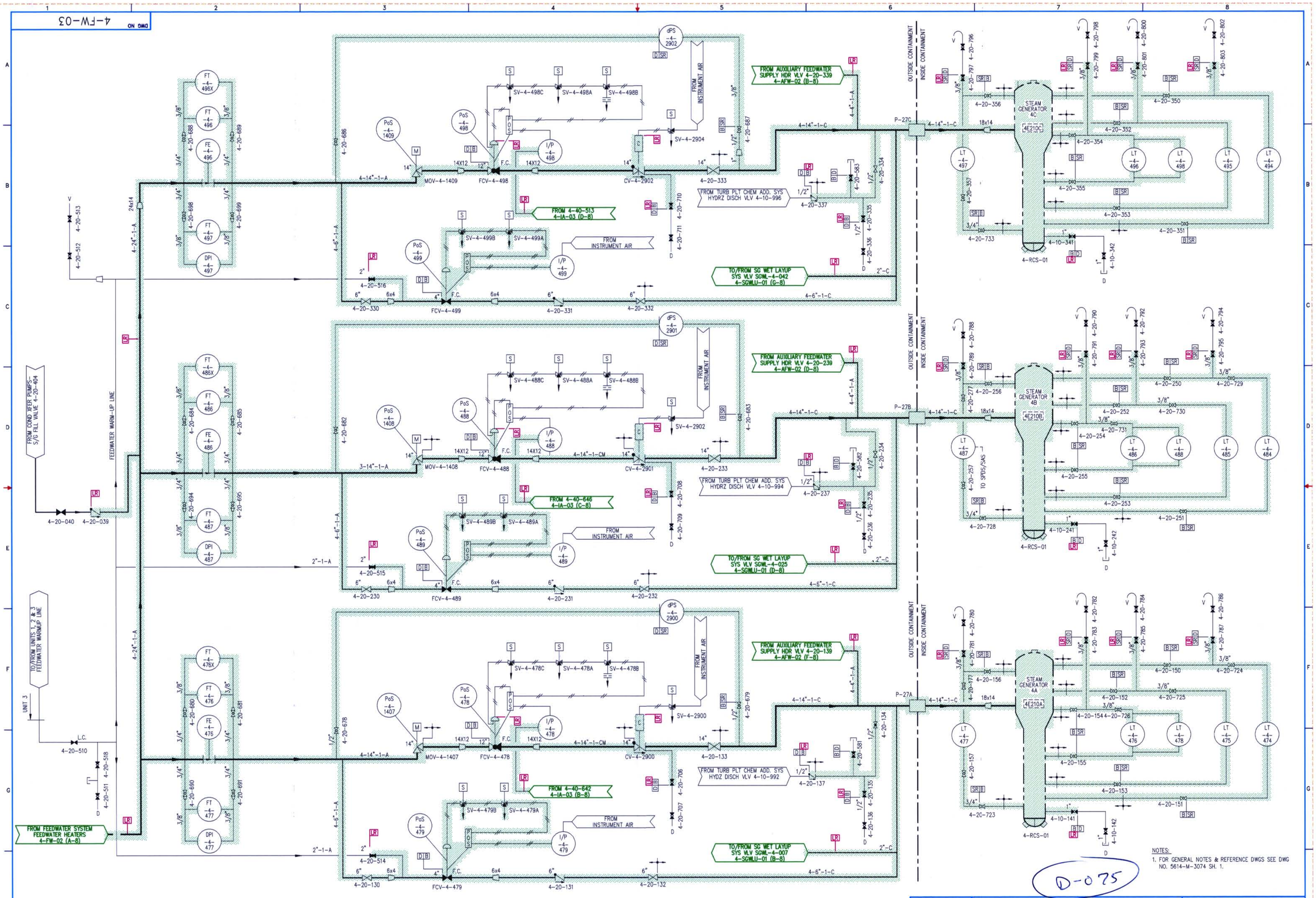

NOTES:
1. FOR GENERAL NOTES & REFERENCE DWGS SEE DWG NO. 5614-M-3074 SH. 1.

D-075

FPL

FEEDWATER

FLORIDA POWER & LIGHT
TURKEY POINT NUCLEAR UNIT 4

LICENSE RENEWAL BOUNDARY DRAWING

DRAWING NUMBER	REVISION
4-FW-03	0

4FW03.DWG