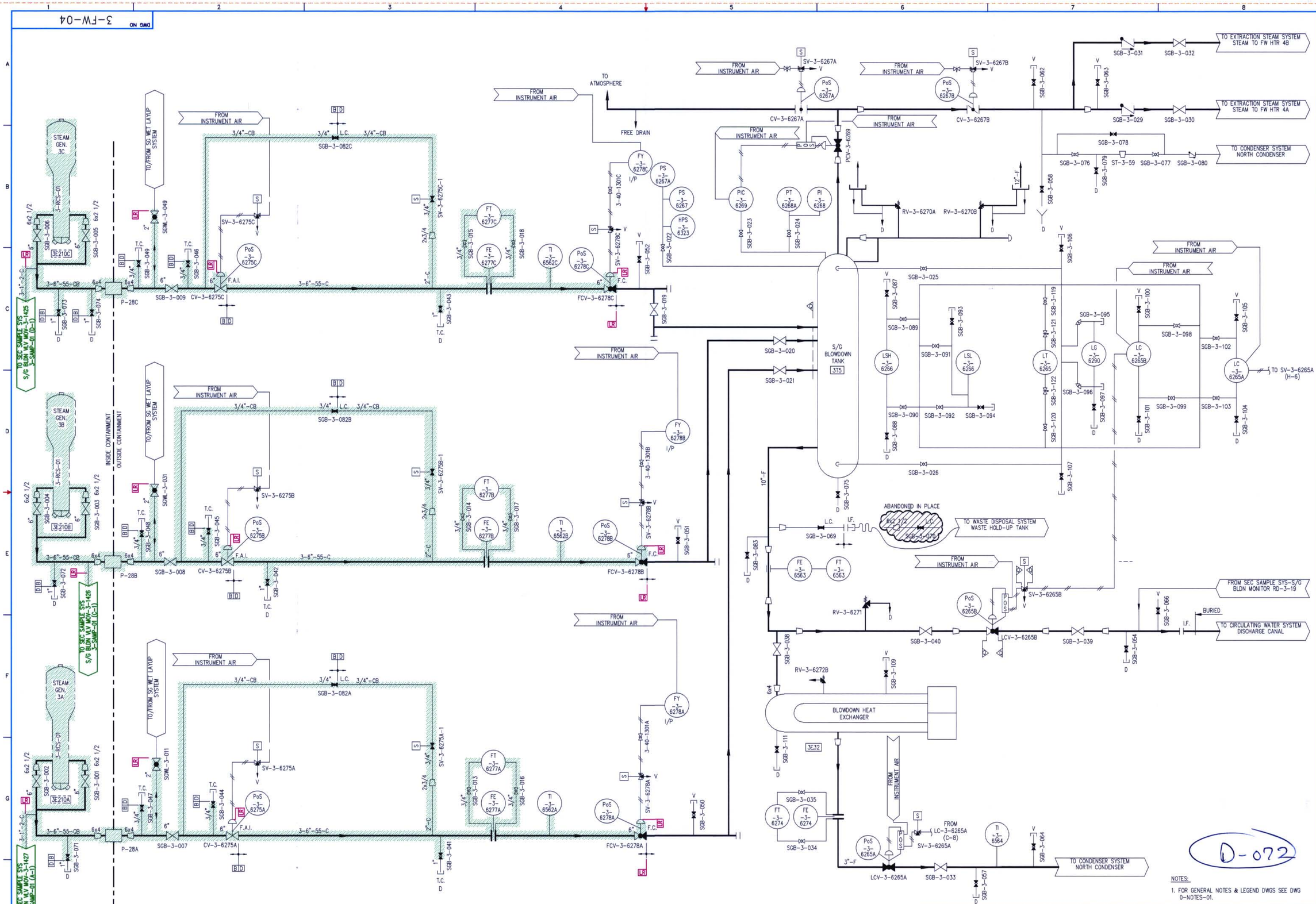

NOTES:

1. FOR GENERAL NOTES & LEGEND DWGS SEE DWG 0-NOTES-01.

FPL

FEEDWATER

FLORIDA POWER & LIGHT
TURKEY POINT NUCLEAR UNIT 3

LICENSE RENEWAL BOUNDARY DRAWING

DRAWING NUMBER	REVISION
3-FW-04	0

3FW04.DWG