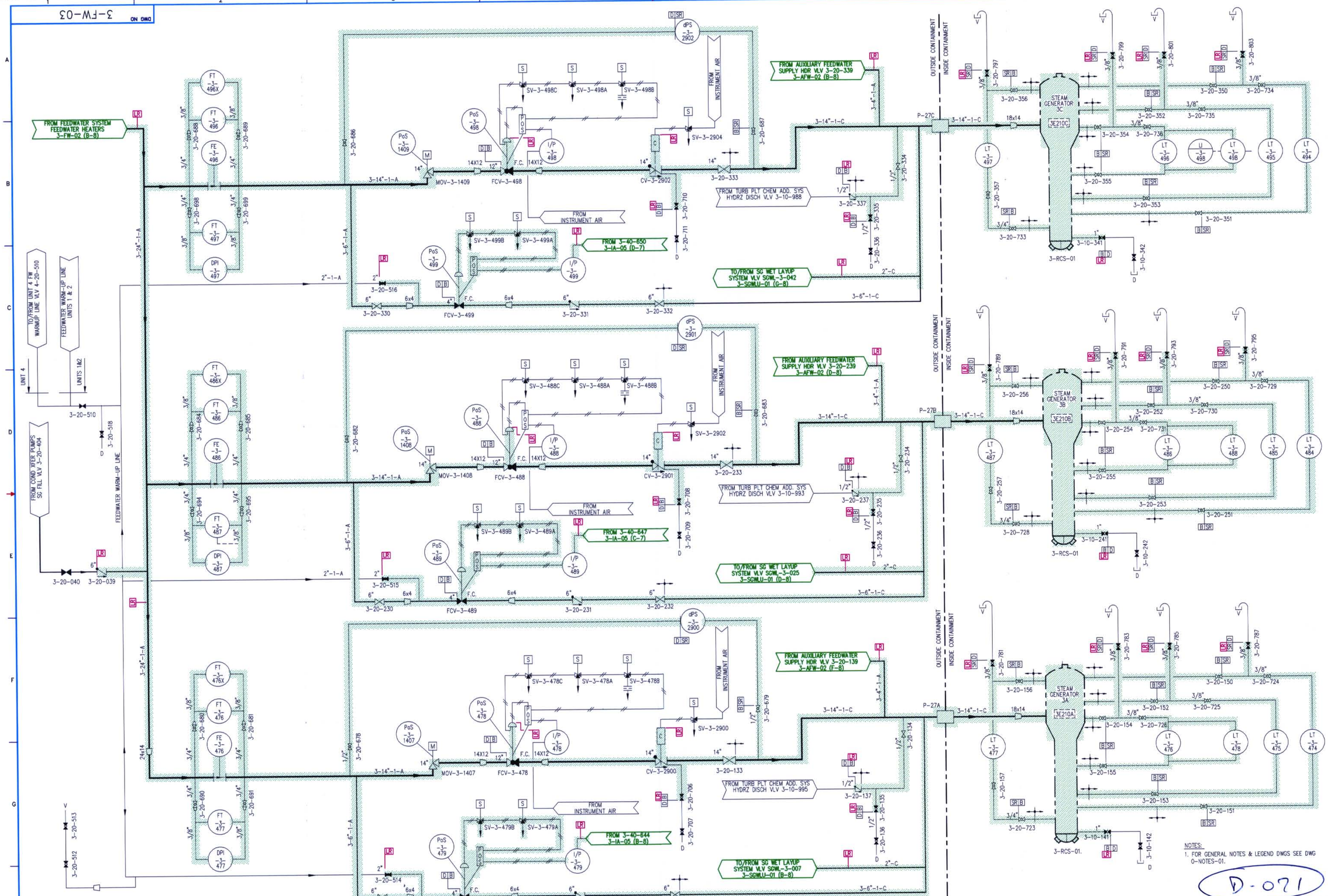

NOTES:
1. FOR GENERAL NOTES & LEGEND DWGS SEE DWG 0-NOTES-01.

D-071

FPL

FEEDWATER

FLORIDA POWER & LIGHT
TURKEY POINT NUCLEAR UNIT 3
LICENSE RENEWAL BOUNDARY DRAWING

DRAWING NUMBER	REVISION
3-FW-03	0

3FW03.DWG