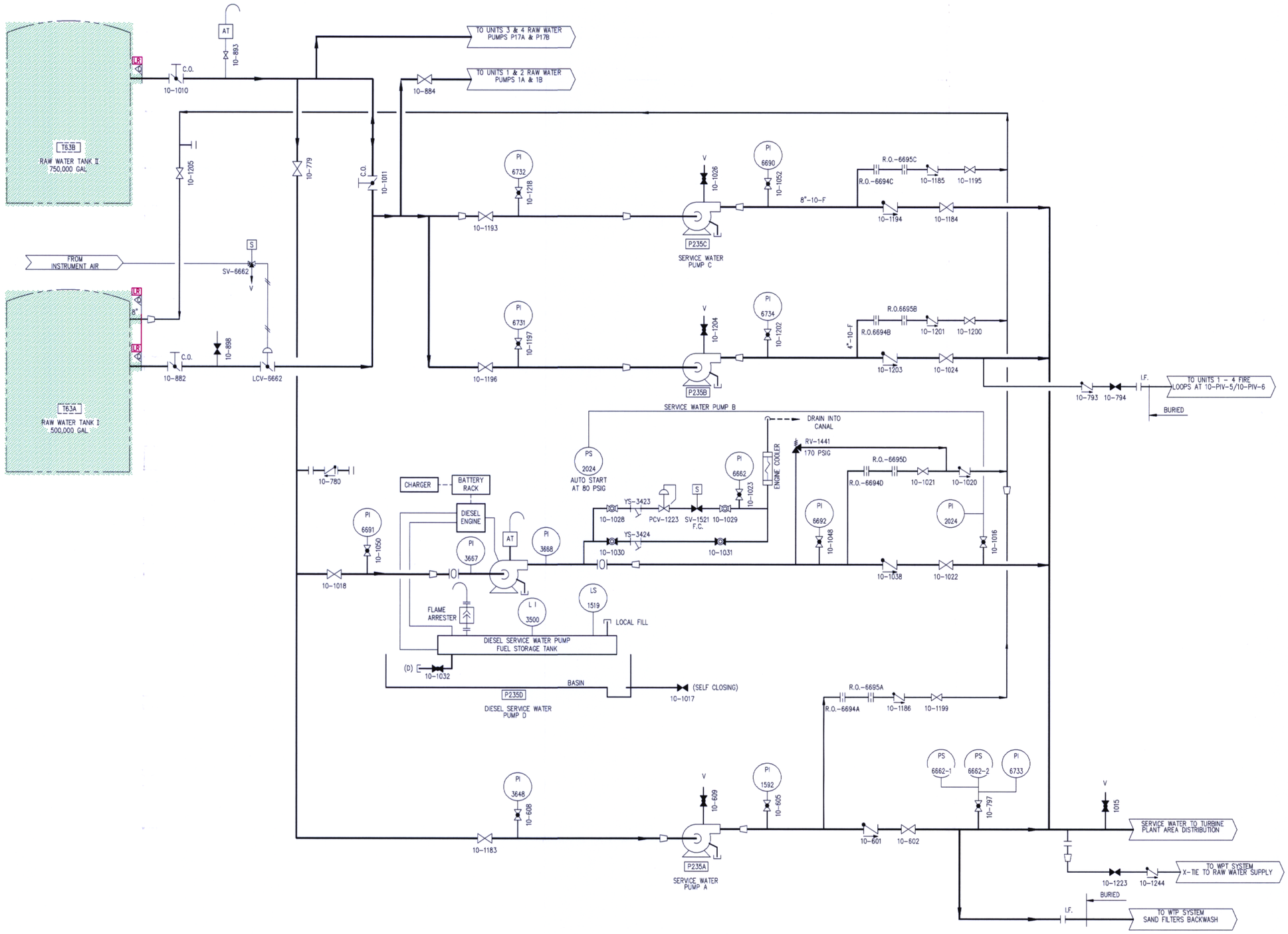

D-058

NOTES:

1. FOR GENERAL NOTES & LEGEND SEE DWG 0-NOTES-01.

FPL

FIRE PROTECTION

FLORIDA POWER & LIGHT
TURKEY POINT NUCLEAR UNITS 3 & 4
LICENSE RENEWAL BOUNDARY DRAWING

DRAWING NUMBER	REVISION
0-FP-02	0

0FP02.DWG

DWG NO 0-FP-02