DWG NO 0-FP-01

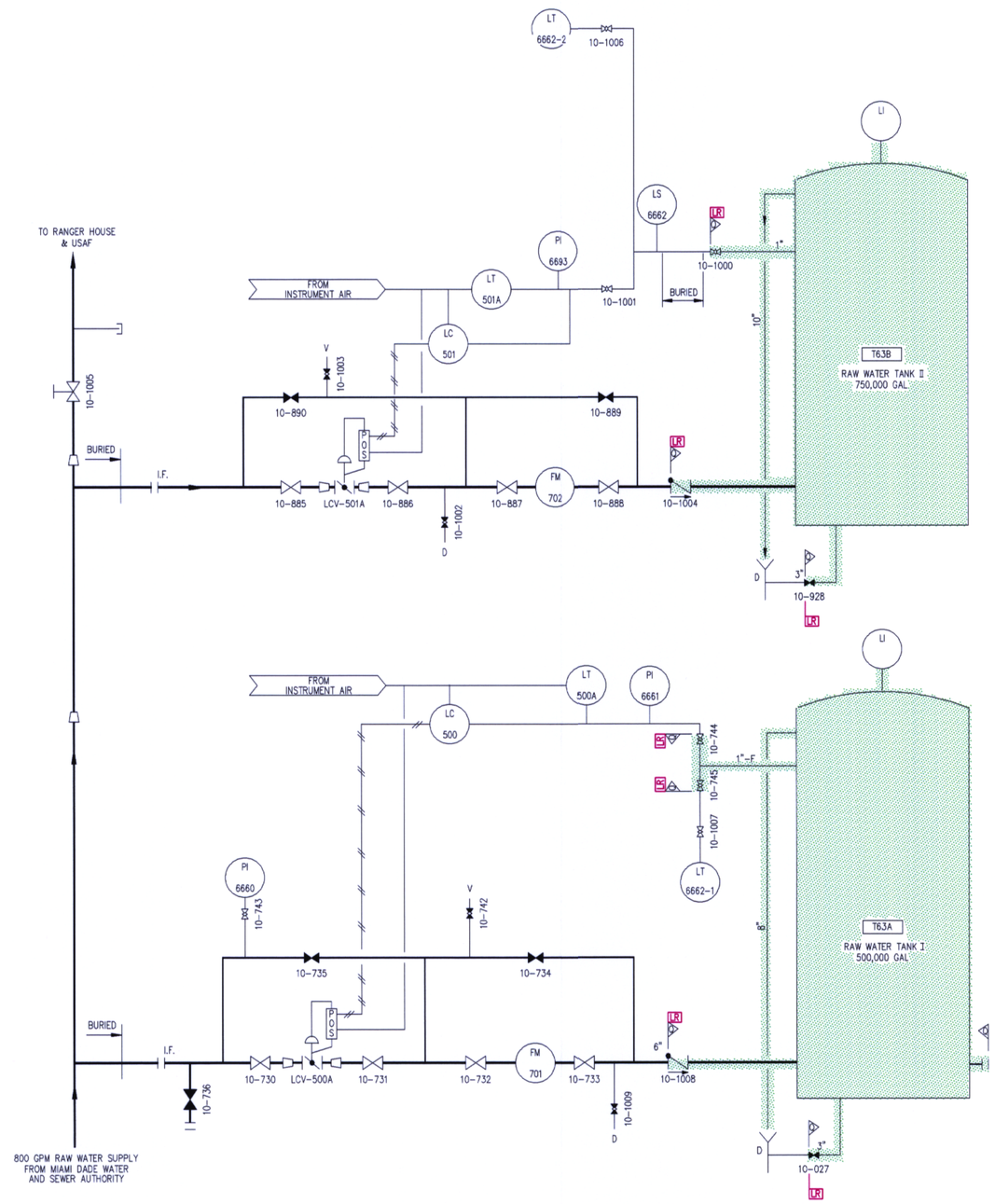

D-057

NOTES:

1. FOR GENERAL NOTES & LEGEND SEE DWG NO. 0-NOTES-01.

FPL	FIRE PROTECTION	FLORIDA POWER & LIGHT TURKEY POINT NUCLEAR UNITS 3 & 4 LICENSE RENEWAL BOUNDARY DRAWING
		DRAWING NUMBER: 0-FP-01 — REVISION: 0

0FP01.DWG