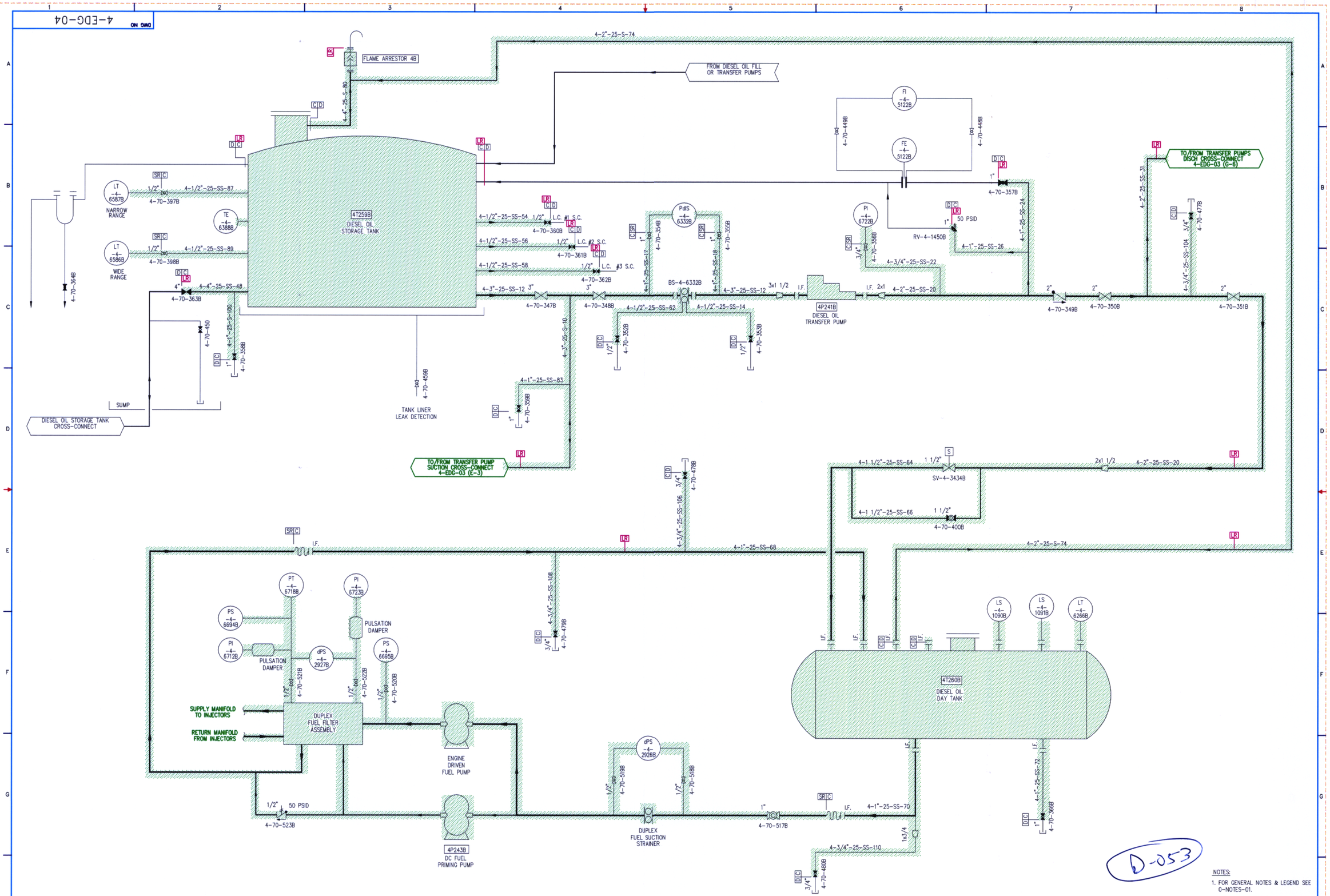

D-053

NOTES:

1. FOR GENERAL NOTES & LEGEND SEE 0-NOTES-01.

FPL	EMERGENCY DIESEL GENERATOR-FUEL OIL	FLORIDA POWER & LIGHT TURKEY POINT NUCLEAR UNIT 4 LICENSE RENEWAL BOUNDARY DRAWING
		DRAWING NUMBER: 4-EDG-04 — REVISION: 0

4EDG04.DWG