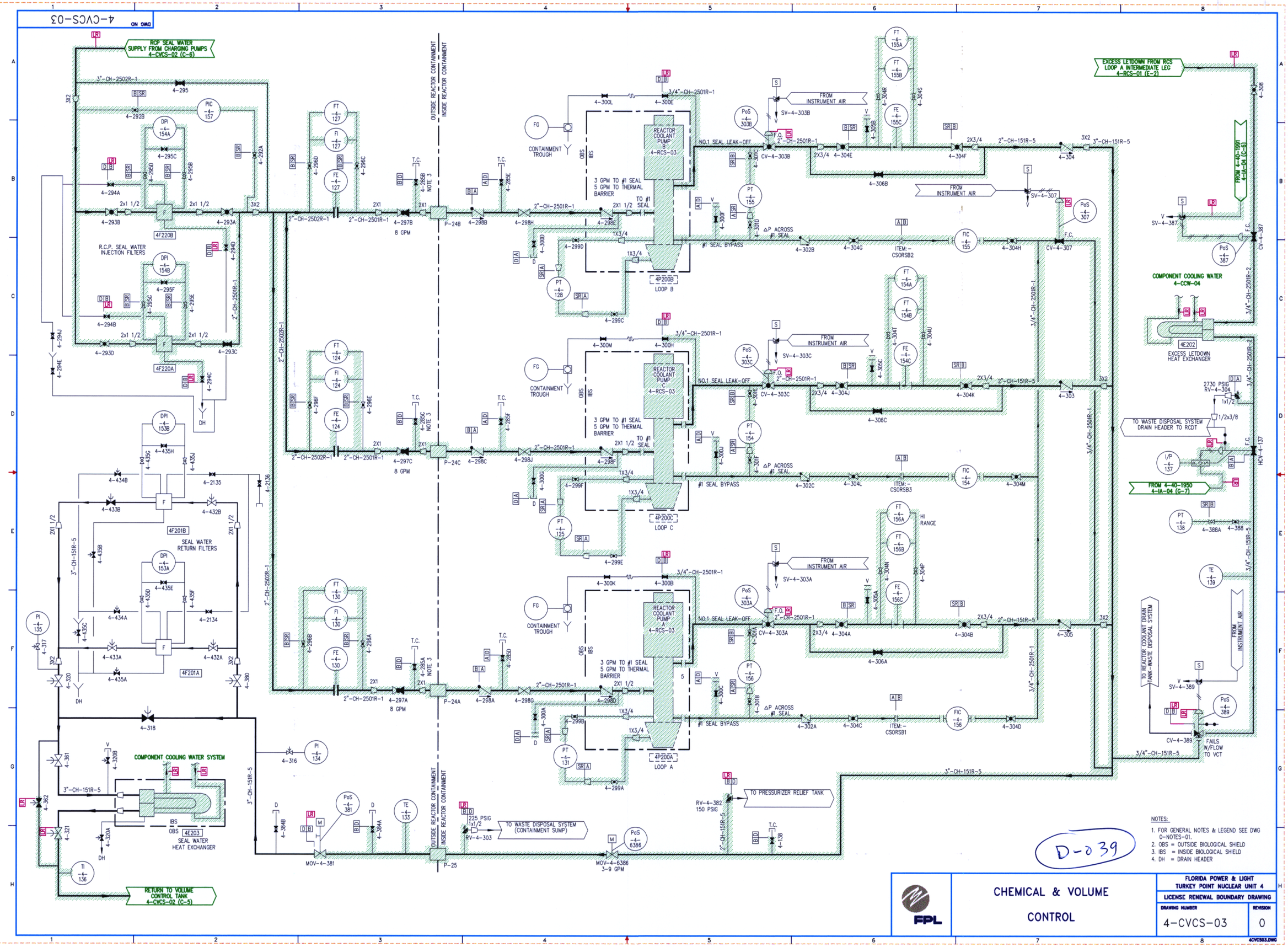

NOTES:

1. FOR GENERAL NOTES & LEGEND SEE DWG 0-NOTES-01.
2. OBS = OUTSIDE BIOLOGICAL SHIELD
3. IBS = INSIDE BIOLOGICAL SHIELD
4. DH = DRAIN HEADER

FPL

CHEMICAL & VOLUME CONTROL

FLORIDA POWER & LIGHT
TURKEY POINT NUCLEAR UNIT 4
LICENSE RENEWAL BOUNDARY DRAWING

DRAWING NUMBER	REVISION
4-CVCS-03	0

4CVCS03.DWG