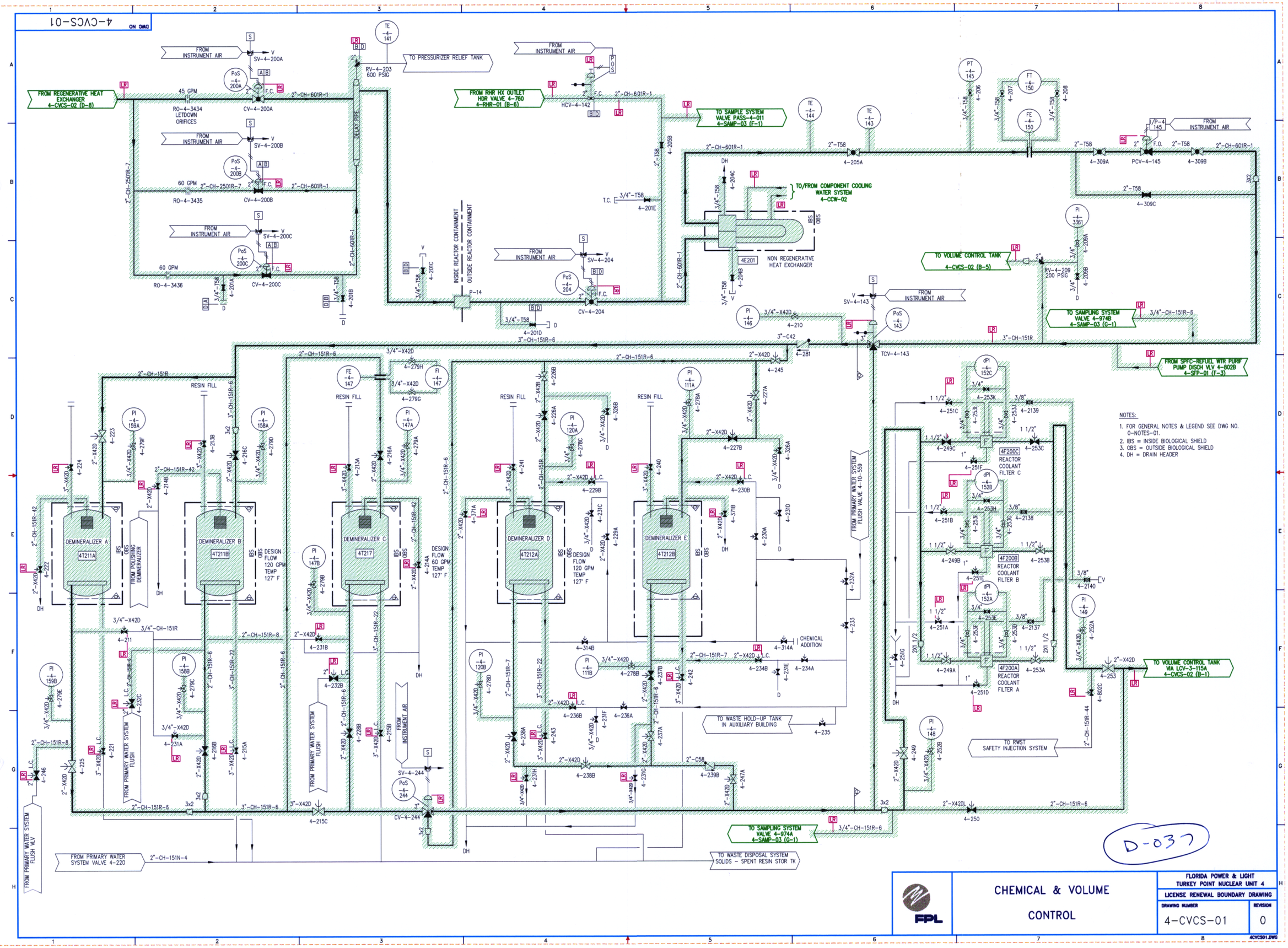
DWG NO 4-CVCS-01
FROM REGENERATIVE HEAT EXCHANGER 4-CVCS-02 (D-8)
FROM INSTRUMENT AIR
TO PRESSURIZER RELIEF TANK
FROM RHR HX OUTLET HDR VALVE 4-760 4-RHR-01 (B-6)
TO SAMPLE SYSTEM VALVE PASS-4-011 4-SAMP-03 (F-1)
TO/FROM COMPONENT COOLING WATER SYSTEM 4-CCW-02
NON REGENERATIVE HEAT EXCHANGER
TO VOLUME CONTROL TANK 4-CVCS-02 (B-5)
TO SAMPLING SYSTEM VALVE 4-974B 4-SAMP-03 (G-1)
FROM SPFC-REFUEL WTR PURF PUMP DISCH VLV 4-802B 4-SFP-01 (F-3)
INSIDE REACTOR CONTAINMENT
OUTSIDE REACTOR CONTAINMENT
DELAY PIPE
DEMINERALIZER A 4T211A
DEMINERALIZER B 4T211B
DEMINERALIZER C 4T217
DEMINERALIZER D 4T212A
DEMINERALIZER E 4T212B
DESIGN FLOW 120 GPM TEMP 127° F
DESIGN FLOW 60 GPM TEMP 127° F
FROM POLISHING DEMINERALIZER
RESIN FILL
FROM PRIMARY WATER SYSTEM FLUSH
FROM PRIMARY WATER SYSTEM FLUSH VLV
FROM PRIMARY WATER SYSTEM VALVE 4-220
FROM PRIMARY WATER SYSTEM FLUSH VALVE 4-10-559
CHEMICAL ADDITION
TO WASTE HOLD-UP TANK IN AUXILIARY BUILDING
TO WASTE DISPOSAL SYSTEM SOLIDS - SPENT RESIN STOR TK
TO RWST SAFETY INJECTION SYSTEM
TO VOLUME CONTROL TANK VIA LCV-3-115A 4-CVCS-02 (B-1)
4F200C REACTOR COOLANT FILTER C
4F200B REACTOR COOLANT FILTER B
4F200A REACTOR COOLANT FILTER A
NOTES:
1. FOR GENERAL NOTES & LEGEND SEE DWG NO. 0-NOTES-01.
2. IBS = INSIDE BIOLOGICAL SHIELD
3. OBS = OUTSIDE BIOLOGICAL SHIELD
4. DH = DRAIN HEADER
D-037
FPL
CHEMICAL & VOLUME CONTROL
FLORIDA POWER & LIGHT
TURKEY POINT NUCLEAR UNIT 4
LICENSE RENEWAL BOUNDARY DRAWING
DRAWING NUMBER 4-CVCS-01
REVISION 0
4CVCS01.DWG