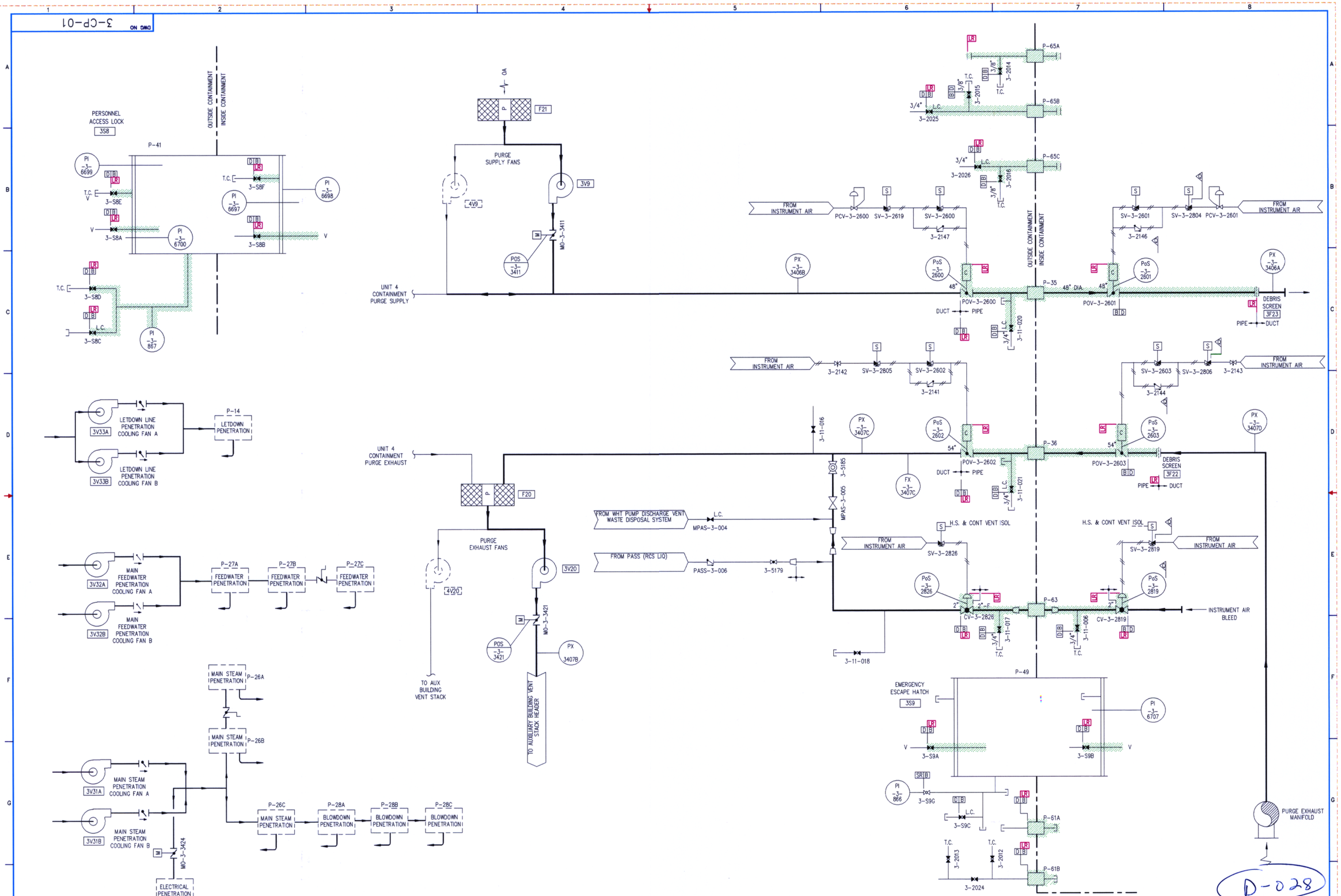

NOTES:

1. FOR GENERAL NOTES & LEGEND SEE DWG NO. 0-NOTES-01.

FPL

CONATAINMENT PURGE AND MISC. PENETRATIONS

FLORIDA POWER & LIGHT
TURKEY POINT NUCLEAR UNIT 3

LICENSE RENEWAL BOUNDARY DRAWING

DRAWING NUMBER	REVISION
3-CP-01	0

3CP01.DWG