DWG NO 4-CCW-03

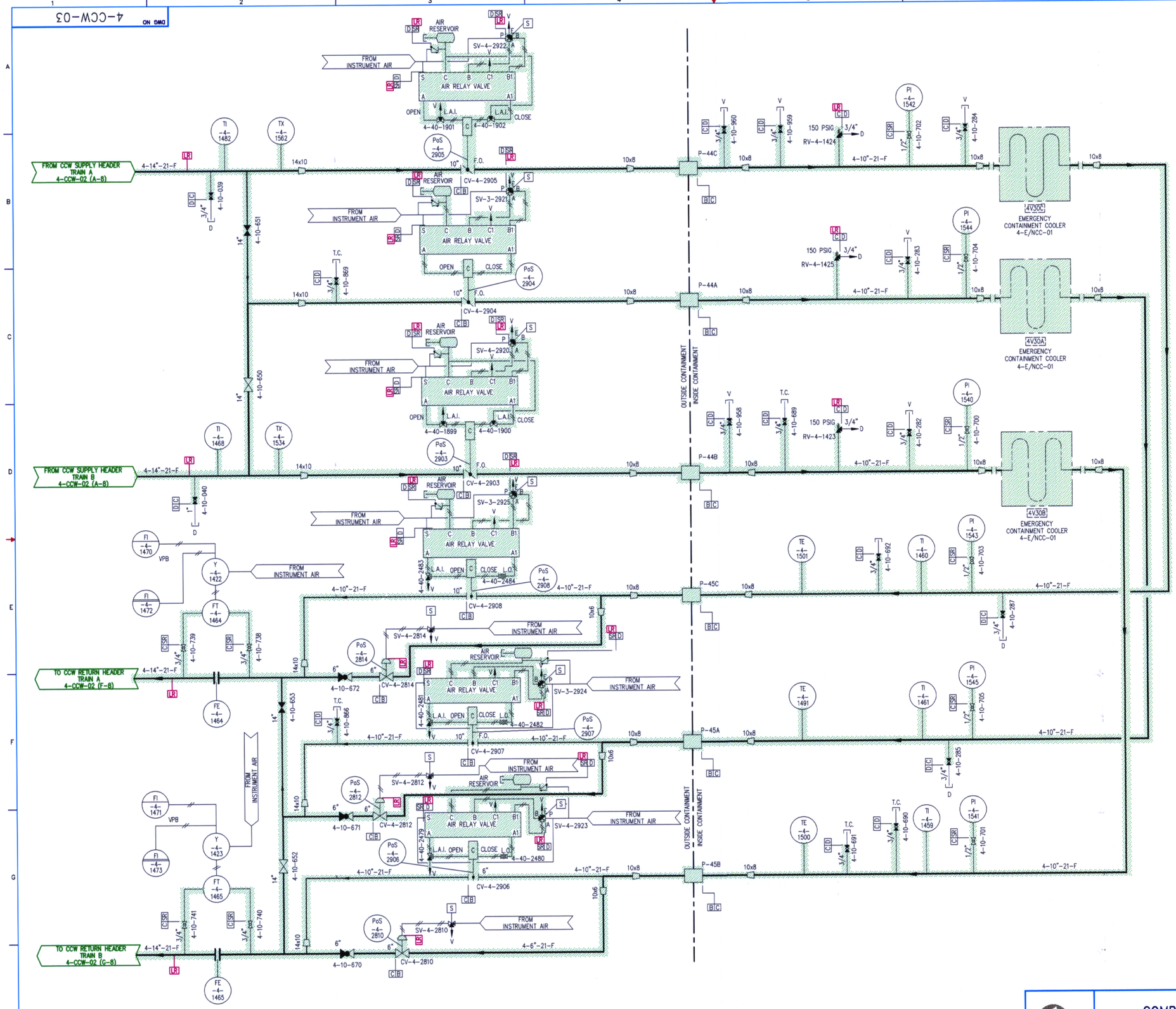

LEGEND: (FOR SV-4-2920, SV-4-2921, SV-4-2922, SV-4-2923, SV-4-2924 & SV-4-2925)

DE-ENERGIZED 4-WAY

ENERGIZED 4-WAY
ARROW INDICATES AIR FLOW

D-024

NOTES:

1. FOR GENERAL NOTES & LEGEND SEE DWG 0-NOTES-01.
2. ALL PIPING INSIDE CONTAINTMENT SHOWN ON THIS DRAWING ARE SAFETY RELATED AND ARE WITHIN THE SEISMIC/Q BOUNDARIES.

FPL

COMPONENT COOLING WATER

FLORIDA POWER & LIGHT
TURKEY POINT NUCLEAR UNIT 4

LICENSE RENEWAL BOUNDARY DRAWING

DRAWING NUMBER	REVISION
4-CCW-03	0

4CCW03.DWG