DWG NO 3-CCW-04

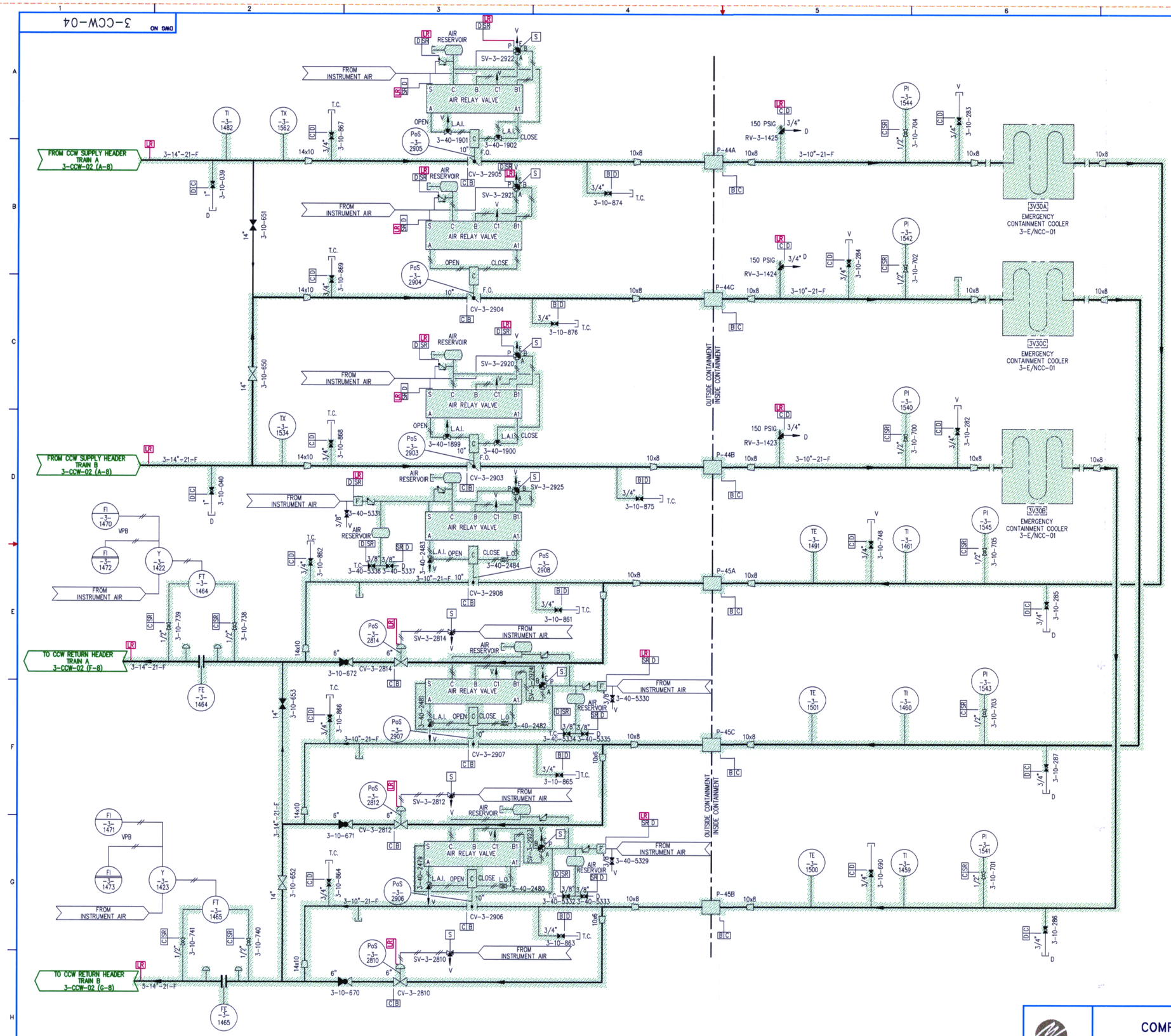

LEGEND: (FOR SV-3-2920, SV-3-2921 SV-3-2922 SV-3-2923 SV-3-2924 & SV-3-2925)

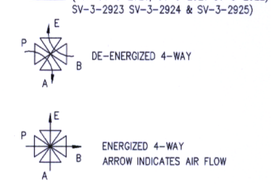

D-020

NOTES:

1. FOR GENERAL NOTES & LEGEND SEE DWG 0-NOTES-01.
2. ALL PIPING INSIDE CONTAINMENT SHOWN ON THIS DWG IS SAFETY RELATED AND WITHIN THE SEISMIC/Q BOUNDARIES.

FPL

COMPONENT COOLING WATER

FLORIDA POWER & LIGHT
TURKEY POINT NUCLEAR UNIT 3

LICENSE RENEWAL BOUNDARY DRAWING

DRAWING NUMBER	REVISION
3-CCW-04	0

3CCW04.DWG