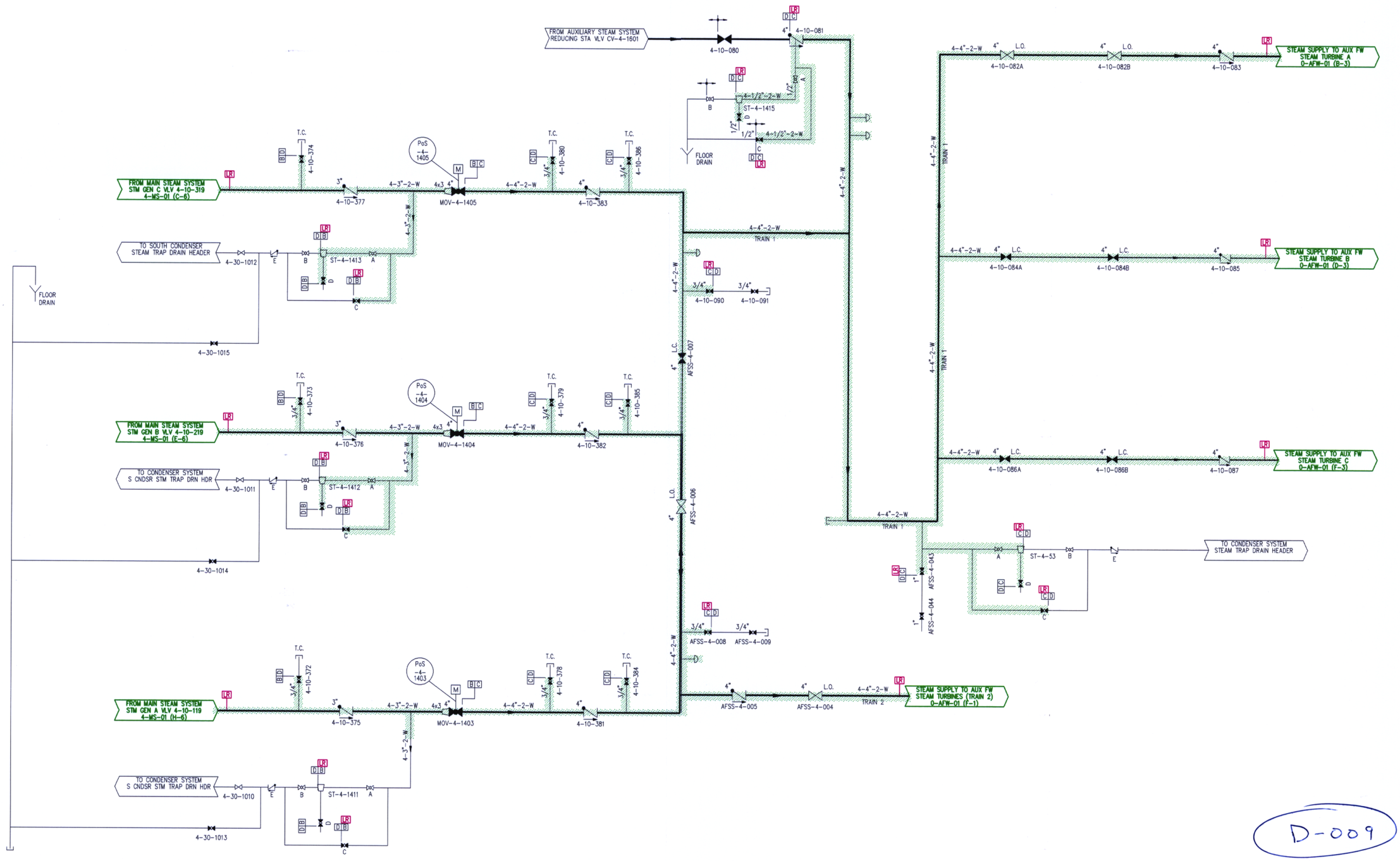

D-009

NOTES:
1. FOR GENERAL NOTES & LEGEND SEE DWG NO. 0-NOTES-01.

FPL	AUXILIARY FEEDWATER	FLORIDA POWER & LIGHT TURKEY POINT NUCLEAR UNIT 4 LICENSE RENEWAL BOUNDARY DRAWING DRAWING NUMBER 4-AFW-01 — REVISION 0

4AFW01.DWG