ENERGY NORTHWEST

# INTEROFFICE MEMORANDUM

**DATE:** September 6, 2000

**TO:** Distribution

B.D. Francisco

**FROM:** Procedure Control, Administrative Services, WNP-2 (927A)

**SUBJECT:** **WNP-2 PLANT PROCEDURES MANUAL - VOLUME 13**
**PACKAGE NO. 2000-417**

**REFERENCE:**

The following Procedure(s) have been revised/approved and are to be inserted in your controlled copy of the Manual and the superseded revisions are to be removed and destroyed:

| Procedure | Rev. | Title |
|---|---|---|
| 13.1.1 | 28 | Classifying the Emergency |
| 13.1.1A | 6 | Classifying the Emergency – Technical Bases |
| 13.2.1 | 14 | Emergency Exposure Levels/Protective Action Guides |
| 13.5.3 | 19 | Evacuation of Exclusion and/or Nearby Facilities |
| 13.9.1 | 25 | Environmental Field Monitoring Operations |
| 13.10.8 | 17 | Security Leiutenant Duties |
| 13.11.1 | 23 | EOF Manager Duties |
| 13.11.3 | 19 | Site Support and Staff Duties |
| 13.11.7 | 21 | Radiolgical Emergency Manager Duties |
| 13.11.18 | 11 | Information Coordinator Duties |
| 13.13.3 | 12 | Intermediate Phase MUDAC Operations |

Also included in this package are EDITORIAL CHANGES, please replace the pages located in your manual with the attached pages:

| Procedure | Page |
|---|---|
| 13.10.1 | 2 and 8 |
| 13.10.2 | 7 and 16 |

To verify receipt or cancellation of the subject Procedure(s), please sign, date and **return this receipt to Procedure Control, MD 927A** within TEN (10) WORKING DAYS of the date of this IOM. Or the receipt may be FAXED back to (509)377-2476

Energy Northwest
Procedure Control (Mail Drop 927A)
PO Box 968
Richland, WA 99352

Date _____ Signature of Manual Holder _____ Controlled Copy Number 87

A045

## DISTRIBUTION - VOLUME 13

| Control Copy | Location | Mail Drop |
|---|---|---|
| 2 | *Control Room (501) **(IOM to CRS)** | 927A |
| 3 | *Shift Manager | 927A |
| 5 | Licensed Training | 1027 |
| 6 | *Simulator | 1027 |
| 12 | PEC Library | PEC |
| 25 | Bruce Bond | 911 |
| 26 | Region IV, NRC | ---- |
| 28 | Region IV, NRC | ---- |
| 30 | EOF Support Engineering Library | 1050 |
| 31 | *TSC Emergency Response | 927A |
| 35 | NRC Resident Inspector | ---- |
| 52 | State of Washington, Military Department | ---- |
| 55 | Federal Emergency Mgmt. Agency | ---- |
| 57 | Benton County Dept of Emerg. Mgmt. | ---- |
| 58 | *WNP-2 Security (SAS-CR) **(13.1.1, 13.4.1, 13.5.1, 13.5.3, 13.5.5, 13.10.8, 13.11.10, 13.12.19, 13.13.4)** | 927A |
| 59 | *WNP-2 Security (CAS-AAP) **(13.1.1, 13.4.1, 13.5.1, 13.5.3, 13.5.5, 13.10.8, 13.11.10, 13.12.19, 13.13.4)** | 927A |
| 60 | WNP-2 Security | 956 |
| 63 | Emergency Training | PE30 |
| 64 | *Radwaste Control Room (467) | 927A |
| 66 | *Simulator, Shift Manager | 1027 |
| 68 | *Remote Shutdown Room (467) **(13.1.1, 13.2.1, 13.2.2, 13.4.1, 13.5.1, 13.10.1, 13.10.9)** | 927A |
| 75 | Dept. of Health Radiation Protection | ---- |
| 78 | *Control Room – (501) STA's Desk | 927A |
| 83 | *MUDAC | 1020 |
| 86 | *Simulator - STA's Desk | 1034 |
| 87 | Document Control Desk, NRC | ---- |
| ++90 | *Joint Information Center | PE30 |
| 94 | *EOF | 1020 |
| 97 | *EOF | 1020 |
| 114 | EP Manager | PE30 |
| 127-130 (4) | Licensed Training | 1027 |
| 132 | Licensed Training | 1027 |
| 134-136 (3) | *MUDAC Field Team Kits **(13.9.1, 13.9.5, 13.9.8, 13.13.4, 13.14.4)** | 1020 |
| ++137 | *MPF Field Team Kits **(13.7.5, 13.9.1, 13.9.5, 13.9.8, 13.13.4, 13.14.4)** | PE30 |
| 142 | Hanford UDAC | ---- |
| 146 | FEMA RX Liaison | ---- |
| 155 | *Maintenance Library (Memo to Georgia) | 927A |
| 160 | *OSC Emergency Support | 927A |
| 161 | Equipment Operator Training | 1027 |
| 164 | Oregon State Dept. of Energy | ---- |
| 218 | U.S. Nuclear Regulatory Commission | ---- |
| 219-221 (3) | Licensed Training | 1027 |
| 223 | Franklin County Emergency Management | ---- |

**++ Procedure Control assures delivery is arranged/made to J. Ittner**

* Level 1 File

| | | |
|---|---|---|
| ENERGY NORTHWEST | | USE CURRENT REVISION |
| COLUMBIA GENERATING STATION<br>PLANT PROCEDURES MANUAL | | |
| PROCEDURE NUMBER<br>*13.1.1 | APPROVED BY<br>DWC - Revision 28 | DATE<br>09/06/00 |
| VOLUME NAME<br>EMERGENCY PLAN IMPLEMENTING PROCEDURES | | |
| SECTION<br>EMERGENCY CLASSIFICATION | | |
| TITLE<br>CLASSIFYING THE EMERGENCY | | |

TABLE OF CONTENTS


Page

1.0 PURPOSE . . . . . 2

2.0 REFERENCES . . . . . 2

3.0 RESPONSIBILITIES . . . . . 3

3.1 Emergency Classification Responsibilities . . . . . 3
3.2 Use of Plant Instruments and Indications . . . . . 4
3.3 Emergency Class Description . . . . . 5
3.4 Recovery vs. Downgrading Emergency Classifications . . . . . 5
3.5 Mode Applicability . . . . . 5
3.6 Emergency Classification Chart . . . . . 6
3.7 Transitory Event Classification . . . . . 6

4.0 PROCEDURE . . . . . 7

4.1 Initial Classification/Control Room Actions . . . . . 7
4.2 Continued Classification/Emergency Director Actions . . . . . 8
4.3 Terminating The Emergency Classification . . . . . 8
4.4 Transitory Event Classification Notification . . . . . 9

5.0 ATTACHMENTS . . . . . 9

5.1 WNP-2 Emergency Classification Table . . . . . 10
5.2 WNP-2 Emergency Classification Chart Distribution . . . . . 34

## 1.0 PURPOSE

NOTE: Refer to PPM 13.1.1.A for the Technical Bases for this procedure.

The purpose of this procedure is to provide guidelines for identifying conditions for which specific emergency classifications must be made. This procedure should be referred to whenever conditions at or near the Plant are out of the ordinary.

## 2.0 REFERENCES

2.1 Letter GI2-94-349, NRC to Energy Northwest, dated December 9, 1994, Emergency Action Level (EAL) Changes For Energy Northwest Nuclear Project No. 2 (WNP-2)(TAC No. M88504)

2.2 10CFR50 Appendix E, IV.B, Assessment Actions {R5727}

2.3 Internal NRC Letter, William Travors to W.D. Shafer, 6/6/88, Recovery vs. Downgrading

2.4 NUREG-1022, Rev. 1, Event Reporting Systems

2.5 NEI 97-03 (NUMARC/NESP-007), Methodology for Development of Emergency Action Levels, Draft Final Revision 3

2.6 WNP-2 Emergency Plan, Section 4

2.7 PPM 13.1.1.A, Classifying The Emergency - Technical Bases

2.8 PPM 13.2.2, Determining Protective Action Recommendations

2.9 PPM 13.4.1, Emergency Notifications

2.10 PPM 13.10.1, Control Room Operations and Shift Manager Duties

2.11 PPM 13.10.2, TSC Manager Duties

2.12 PPM 13.11.1, EOF Manager Duties

2.13 PPM 13.13.2, Emergency Event Termination and Recovery Operations

2.14 PPM 13.13.4, After Action Reporting

## 3.0 RESPONSIBILITIES

### 3.1 Emergency Classification Responsibilities

#### 3.1.1 Emergency Director Responsibilities

Maintain the sole responsibility for timely classification and declaration of any WNP-2 emergency situation utilizing guidance specified in this procedure and the recommendations of the Operations Manager, Shift Manager, Control Room Supervisor, Shift Technical Advisor, Radiological Protection Manager, or other cognizant support personnel.

Given abnormal conditions at or near the Plant, utilize Attachment 5.1, Emergency Classification Table or the Emergency Classification Chart for guidance in determining the proper emergency classification.

The Shift Manager is responsible for the initial emergency classification and immediately becomes the Emergency Director. The TSC Manager or EOF Manager can then relieve the Shift Manager of the Emergency Director responsibilities once the Technical Support Center or Emergency Operations Facility is operational. Ultimately the Emergency Director responsibilities will reside with the EOF Manager. These responsibilities are presented in more detail in PPM 13.10.1 for the Shift Manager, PPM 13.10.2 for the TSC Manager, and PPM 13.11.1 for the EOF Manager.

#### 3.1.2 Shift Manager Responsibilities

Function as the Emergency Director until relieved.

Maintain primary responsibility for monitoring the status of plant parameters and other initiating conditions upon which emergency classification depends.

Recommend an appropriate emergency classification to the Emergency Director, i.e., TSC Manager or EOF Manager, for any observed WNP-2 emergency conditions. Utilize guidance specified in this procedure, and the recommendations of the Control Room Supervisor, Shift Technical Advisor, and Reactor Operators.

3.1.3 Control Room Supervisor, Shift Technical Advisor, Reactor Operator Responsibilities

Monitor the status of Plant parameters and other initiating conditions upon which the emergency classification depends, and inform the Shift Manager if any parameter approaches or exceeds emergency action levels as specified in this procedure. Refer to Attachment 5.1, Emergency Classification Table, or Emergency Classification Chart for guidance in determining the appropriate classification. Additional information describing the basis of each EAL may be found in PPM 13.1.1A.

3.1.4 Technical Support Center (TSC) and Emergency Operations Facility (EOF) Staff Responsibilities

Recommend an emergency classification to the Emergency Director based upon plant conditions and the guidance provided in this procedure.

3.2 Use of Plant Instruments and Indications {R5727}

Plant instrumentation described in each Emergency Action Level in Attachment 5.1 is the primary instrumentation to be used. This does not preclude use of other instruments as alternate indication, as appropriate, to properly classify the emergency.

All conditions defined within the Emergency Action Levels are to be evaluated based on the existence of valid indications.

An indication or reported condition is considered to be valid when it is conclusively verified by:

- An instrument channel check; or
- Indications on related or redundant indicators; or
- By direct observation by plant personnel, such that doubt related to the indicator's operability, the condition's existence, or the report's truth is removed.

Implicit in this definition is the need for timely assessment.

## 3.3 Emergency Class Description

The following is a description of the four classes of emergency:

UNUSUAL EVENT: Unusual events are in progress or have occurred which indicate a potential degradation of the level of safety of the plant. No releases of radioactive material requiring offsite response or monitoring are expected unless further degradation of safety systems occur.

ALERT: Events are in progress or have occurred which involve an actual or potential substantial degradation of the level of safety of the plant. Any releases are expected to be limited to small fractions of the EPA Protective Action Guideline exposure levels.

SITE AREA EMERGENCY: Events are in progress or have occurred which involve actual or likely major failures of plant functions needed for protection of the public. Any releases are not expected to result in exposure levels which exceed EPA Protective Action Guideline exposure levels except near the site boundary.

GENERAL EMERGENCY: Events are in progress or have occurred which involve actual or imminent substantial core degradation or melting with potential for loss of containment integrity. Releases can be reasonably expected to exceed EPA Protective Action Guideline exposure levels offsite for more than the immediate site area.

## 3.4 Recovery vs. Downgrading Emergency Classifications

Emergency classifications should never be downgraded to a less severe classification.

It is appropriate to terminate an emergency classification of Unusual Event or Alert, and exit the classification process because the emergency condition no longer exists and the plant is stable.

When remaining as a Site Area Emergency or a General Emergency is no longer necessary, it is appropriate to terminate the classification and enter the Recovery Phase process described in 13.13.2.

## 3.5 Mode Applicability

The operational conditions (modes) in which Emergency Action Levels are applicable are indicated by a series of boxes as follows:

| 1 | 2 | 3 | 4 | 5 | Def |
|---|---|---|---|---|---|

where the numbers indicate operational conditions as defined in Technical Specifications and Def indicates "Defueled" or all fuel removed from the reactor vessel.

Mode 1 = Power Operations
Mode 2 = Startup
Mode 3 = Hot Shutdown, GT 200°, head bolts tensioned
Mode 4 = Cold Shutdown, LTE 200°
Mode 5 = Refueling

3.6 Emergency Classification Chart

Classifications can be made from either of two sources, the Emergency Classification Table, Attachment 5.1, or the Emergency Classification Chart. In order to maintain this capability, the Emergency Classification Chart must be controlled (i.e., verified, validated, and distributed) in a similar manner as the procedure, thus it is considered to be a part of the procedure. Due to its size, however, the actual chart is not physically attached to the procedure, but is instead issued to those locations that would actually need it during implementation of the procedure. As a minimum, controlled distribution of the Emergency Classification Chart is specified in Attachment 5.2.

If using the Emergency Classification Chart to classify an emergency situation, it is advisable to ensure it is the most current version by comparing the revision number on the chart to the revision number of the procedure.

3.7 Transitory Event Classification

A transitory event classification should be made whenever it is discovered that a condition had existed which met the emergency classification criteria of Attachment 5.1, but where no emergency had been declared and the basis for which no longer exists. This situation could occur due to a rapidly concluded event, an oversight in emergency classification made during the event, or through further assessments made during a post event review. Discoveries of this condition within 90 days following an event are:

a) considered to fall into this category and require the transitory event notifications to be made in accordance with PPM 13.4.1.

b) are to be included in the event's After Action Report in accordance with PPM 13.13.4. Transitory event classification discoveries made beyond 90 days of an event should only be included in the event's After Action Report. If the final After Action Report has already been completed, the discovery should be documented in an addendum to this report.

## 4.0 PROCEDURE

NOTE: The Emergency Action Levels described in this procedure are NOT intended to be used during maintenance and/or testing situations where abnormal temperature, pressure, or equipment status is expected. They are also mode dependent and classifications should only be made if the Plant's mode of operation at the time of the abnormal occurrence was in the range indicated for the particular initiating condition.

### 4.1 Initial Classification/Control Room Actions

NOTE: The Control Room Supervisor may perform the following steps if the Shift Manager is NOT in the Control Room or is incapable of performing these duties.

4.1.1 When indications of abnormal occurrences are received by the Control Room staff, the Shift Manager shall:

a. Verify the indications of the offnormal event or reported sighting.

b. Ensure that immediate actions in accordance with the Emergency Operating Procedures, Abnormal Operating Procedures, and Alarm Response Procedures are taken for the safe and proper operation of the Plant.

NOTE: Decisions should be based on conservative principles, definitions, and purposes for event classification.

c. Compare the abnormal conditions with the nine categories listed in the Emergency Classification Table, Attachment 5.1, or the Emergency Classification Chart and determine which category the event falls into.

d. Compare the information available from valid indications or reports to the Emergency Action Levels in Attachment 5.1 for the appropriate category and classify the event, using the highest level which is supported by the available information.

e. When an event is classified, the Shift Manager shall assume the Emergency Director responsibilities until properly relieved.

f. Determine whether public protective action recommendations are needed per PPM 13.2.2.

NOTE: Offsite notifications to state and local officials are required to be completed within 15 minutes of event classification. Nuclear Regulatory Commission notification should be made as soon as possible following the state and local notifications, but no longer than 60 minutes after event classification.

g. Make notifications per PPM 13.4.1.

h. Take additional actions per PPM 13.10.1.

4.2 Continued Classification/Emergency Director Actions

4.2.1 Continually evaluate the plant conditions to ensure the proper emergency classification is being utilized.

NOTE: Decisions should be based on conservative principles, definitions, and purposes for event classsification.

4.2.2 If Plant conditions change, compare the current conditions with the nine categories listed in the Emergency Classification Table, Attachment 5.1, or the Emergency Classification Chart and determine which category the conditions are applicable to.

4.2.3 Compare the information available from valid indications or reports to the Emergency Action Levels in the appropriate category and reclassify the event, using the highest level which is supported by the available information. Refer to section 3.4 for additional guidance.

4.2.4 Determine whether the public protective action recommendations need to change by checking the criteria in PPM 13.2.2.

4.2.5 Perform follow-up notifications in accordance with PPM 13.4.1.

4.3 Terminating The Emergency Classification

NOTE: PPM 13.13.2 allows direct termination of a Site Area Emergency or General Emergency classification without the formation of the Recovery Task Force, if no significant property damage has occurred.

4.3.1 If existing conditions appear to be below the minimum criteria of the Emergency Action Levels, terminate the Emergency Classification using the guidance in PPM 13.13.2.

4.3.2 Ensure reports are performed in accordance with PPM 13.13.4.

4.3.3 Ensure followup notification of offsite agencies is performed per PPM 13.4.1.

4.4 Transitory Event Classification Notification

4.4.1 If it is discovered that a classifiable event has occurred, but the basis for the classification (i.e., the Emergency Action Level condition) no longer exists; OR that a previously classified event was misclassified and the basis for the classification no longer exists, then perform the following:

a. Do NOT declare the missed classification or implement the Emergency Plan response associated with that classification.

b. Perform a transitory event classification notification to state, local and federal agencies in accordance with PPM 13.4.1.

4.4.2 For EALs with time limits associated with the condition:

a. Upon discovery of the condition, the start time for the time limit for classification begins at the time of discovery.

b. If the condition cannot be corrected within this time limit, then classification must be made.

c. If the condition can be corrected in the time limit since discovery, but the condition existed for a period of time that exceeded the time limit, then a transitory event must be declared.

4.4.3 Ensure reports are performed in accordance with PPM 13.13.4.

5.0 ATTACHMENTS

5.1 WNP-2 Emergency Classification Table

5.2 WNP-2 Emergency Classification Chart Distribution

# WNP-2 EMERGENCY CLASSIFICATION TABLE

| CATEGORY | UNUSUAL EVENT | ALERT | SITE AREA EMERGENCY | GENERAL EMERGENCY |
|---|---|---|---|---|
| 1 Reactor Fuel<br>1.1 Coolant Activity | Fuel Clad Degradation<br>1.1.U.1<br>1 2 3 4<br>RCS sample activity GT Technical Specification 3.4.8 for GT LCO Action Statement time. | Loss OR potential loss of fuel clad<br>1.1.A.1<br>1 2 3<br>Coolant activity GT 300 $\mu$Ci/gm dose equivalent iodine. | Loss or potential loss of any two fission product barriers<br>1.1.S.1<br>1 2 3<br>Coolant activity GT 300 $\mu$Ci/gm dose equivalent iodine<br>AND ANY of the following:<br>• Any RCS Loss Indicators, Table 1<br>• Total RCS leakage GT 30 gpm inside PC or EDR-FRS-623, Pen 2 upscale high<br>• Any PC Loss Indicators, Table 2<br>• Cannot maintain plant parameters within SRVTPLL, or PSP | A loss of any two fission product barriers and loss or potential loss of the third<br>1.1.G.1<br>1 2 3<br>Coolant activity GT 300 $\mu$Ci/gm dose equivalent iodine<br>AND<br>Drywell pressure response not consistent with LOCA conditions<br>1.1.G.2<br>1 2 3<br>Coolant activity GT 300 $\mu$Ci/gm dose equivalent iodine<br>AND<br>Total RCS leakage GT 30 gpm inside PC or EDR-FRS-623, Pen 2, upscale high<br>AND<br>Any PC Loss Indicators, Table 2<br>1.1.G.3<br>1 2 3<br>Coolant activity GT 300 $\mu$Ci/gm dose equivalent iodine<br>AND<br>Any RCS Loss Indicators, Table 1<br>AND either of the following:<br>Any PC Loss Indicators, Table 2<br>OR<br>Cannot maintain plant parameters within HCTL, SRVTPLL, or PSP |

Attachment 5.1

# WNP-2 EMERGENCY CLASSIFICATION TABLE

| CATEGORY | UNUSUAL EVENT | ALERT | SITE AREA EMERGENCY | GENERAL EMERGENCY |
|---|---|---|---|---|
| 1 Reactor Fuel<br>1.2 Radiation Monitors | Fuel Clad Degradation<br>1.2.U.1<br>1 2 3<br>SJAE CONDSR OUTLET RAD HI-HI alarm (P602) | Loss OR potential loss of RCS<br>1.2.A.1<br>1 2 3<br>Containment Radiation Monitor CMS-RIS-27E and CMS-RIS-27F reading GT 70 R/hr | Loss or potential loss of any two fission product barriers<br>1.2.S.1<br>1 2 3<br>Containment Radiation Monitor CMS-RIS-27E and CMS-RIS-27F reading GT 3,600 R/hr | A loss of any two fission product barriers and loss or potential loss of the third<br>1.2.G.1<br>1 2 3<br>Containment Radiation Monitor CMS-RIS-27E and CMS-RIS-27F reading GT 14,000 R/hr<br>1.2.G.2<br>1 2 3<br>Containment Radiation Monitor CMS-RIS-27E and CMS-RIS-27F reading GT 3,600 R/hr<br>AND ANY of following:<br>• Cannot maintain plant parameters within HCTL, SRVTPLL, or PSP.<br>• Drywell pressure response not consistent with LOCA conditions.<br>• Any PC Loss Indicators, Table 2 |

Attachment 5.1

# WNP-2 EMERGENCY CLASSIFICATION TABLE

| CATEGORY | UNUSUAL EVENT | ALERT | SITE AREA EMERGENCY | GENERAL EMERGENCY |
|---|---|---|---|---|
| 1 Reactor Fuel<br>1.3 Refueling Incidents | Unexpected decrease in water covering irradiated fuel assemblies<br>1.3.U.1<br>1 2 3 4 5 def<br><br>Uncontrolled water level decrease in the reactor cavity or SFP below the level of the weirs with all irradiated fuel assemblies remaining covered by water | Major damage to irradiated fuel OR loss of water level that has resulted or will result in the uncovering of irradiated fuel outside the RPV<br>1.3.A.1<br>1 2 3 4 5 def<br><br>HIGH alarm on ARM-RIS-1 (Fuel Pool ARM) resulting from an uncontrolled irradiated fuel handling process | | |
| | | Loss of water level that has or will result in the uncovering of irradiated fuel outside the reactor vessel<br>1.3.A.2<br>1 2 3 4 5 def<br><br>Water level, when not intentionally lowered, observed to be below the top of the gate sill separating the reactor cavity and the SFP<br>1.3.A.3<br>1 2 3 4 5 def<br><br>Report of visual observation of irradiated fuel uncovered or uncovering imminent. | | |

# WNP-2 EMERGENCY CLASSIFICATION TABLE

| CATEGORY | UNUSUAL EVENT | ALERT | SITE AREA EMERGENCY | GENERAL EMERGENCY |
|---|---|---|---|---|
| 2 RPV<br>2.1 RPV Water Level | RCS Leakage<br>2.1.U.1<br>1 2 3<br><br>Valid unidentified leakage GE 10 gpm or upscale high indicated on recorder EDR-FRS-623, Pen 1 (P632) (Non RCC)<br>OR<br>Valid identified leakage GE 25 gpm indicated on recorder EDR-FRS-623, Pen 2 (P632) | Loss OR potential loss of RCS<br>2.1.A.1<br>1 2 3<br><br>Total RCS leakage GT 30 gpm inside PC or EDR-FRS-623, Pen 2 upscale high | Loss or potential loss of any two fission product barriers<br>2.1.S.1<br>1 2 3 4 5<br><br>RPV level LT -161 inches or cannot be determined | A loss of any two fission product barriers and loss of potential loss of the third<br>2.1.G.1<br>1 2 3<br><br>Entry into Severe Accident Guidelines<br>2.1.G.2<br>1 2 3<br><br>RPV level LT -161 inches, or cannot be determined<br>AND ANY of following:<br>• Rapid unexplained decrease of PC pressure following an initial increase.<br>• Drywell pressure response not consistent with LOCA conditions<br>• Failure of containment isolation valves (LCS Table 1.6.1.3-1) in any one line to close following auto or manual initiation AND downstream pathway outside primary containment exists |

Attachment 5.1

# WNP-2 EMERGENCY CLASSIFICATION TABLE

| CATEGORY | UNUSUAL EVENT | ALERT | SITE AREA EMERGENCY | GENERAL EMERGENCY |
|---|---|---|---|---|
| 2 RPV<br>2.2 Reactivity Control | Inadvertent Criticality<br>2.2.U.1<br>[ ][2][3][4][5][ ]<br>An extended and unplanned sustained positive period observed on NIs, while NOT performing a reactor startup. | Failure of Reactor Protection System (RPS) instrumentation to complete or initiate a reactor scram AND manual scram was successful.<br>2.2.A.1<br>[1][2][ ][ ][ ][ ]<br>Any RPS setpoint (including manual) has been exceeded per Technical Specification 3.3.1.1<br>AND<br>RPS actuation failed to result in a control rod pattern which alone always assures reactor shutdown under all conditions<br>AND<br>Manual Actions (mode switch in shutdown, manual push buttons and ARI) result in reactor power LE 5%. | Failure of RPS instrumentation to complete or initiate an automatic reactor scram once a RPS setpoint has been exceeded AND manual scram was NOT successful<br>2.2.S.1<br>[1][2][ ][ ][ ][ ]<br>Any RPS setpoint (including manual) has been exceeded per Technical Specification 3.3.1.1<br>AND<br>RPS actuation failed to result in a control rod pattern which alone always assures reactor shutdown under all conditions<br>AND either:<br>Reactor power GT 5% or unknown<br>OR<br>Wetwell temperature GT 110°F | Failure of the RPS to complete an automatic scram AND manual scram was NOT successful AND there is indication of an extreme challenge to the ability to cool the core.<br>2.2.G.1<br>[1][2][ ][ ][ ][ ]<br>Any RPS setpoint (including manual) has been exceeded per Technical Specification 3.3.1.1<br>AND<br>RPS actuation failed to result in a control rod pattern which alone always assures reactor shutdown under all conditions<br>AND<br>Wetwell temperature cannot be maintained LT the HCTL |

# WNP-2 EMERGENCY CLASSIFICATION TABLE

| CATEGORY | UNUSUAL EVENT | ALERT | SITE AREA EMERGENCY | GENERAL EMERGENCY |
|---|---|---|---|---|
| 3 Primary Containment<br>3.1 Primary Containment Pressure | Loss or potential loss of primary containment<br>3.1.U.1<br>1 2 3<br>Rapid unexplained decrease of PC pressure following an initial increase | Loss or potential loss of either fuel clad or RCS<br>3.1.A.1<br>1 2 3<br>Drywell pressure GT 1.68 psig with indications of RCS leakage inside drywell. | Loss or potential loss of any two fission product barriers<br>3.1.S.1<br>1 2 3<br>Drywell pressure response not consistent with LOCA conditions<br>3.1.S.2<br>1 2 3<br>Rapid unexplained decrease of PC pressure following an initial increase AND ANY of the following:<br>• Total RCS leakage GT 30 gpm inside PC or EDR-FRS-623, Pen 2 upscale high<br>• Containment Radiation Monitor CMS-RIS-27E and CMS-RIS-27F reading GT 70 R/hr<br>• Drywell pressure GT 1.68 psig with indications of RCS leakage inside drywell. | A loss of any two fission product barriers and loss or potential loss of the third<br>3.1.G.1<br>1 2 3<br>PC pressure exceeds PCPL |
| 3.2 Wetwell Temperature/ Level | Loss or potential loss of primary containment<br>3.2.U.1<br>1 2 3<br>Cannot maintain plant parameters within SRVTPLL | | Loss or potential loss of any two fission product barriers<br>3.2.S.1<br>1 2 3<br>RPV pressure and wetwell temperature cannot be maintained below HCTL | |

# WNP-2 EMERGENCY CLASSIFICATION TABLE

| CATEGORY | UNUSUAL EVENT | ALERT | SITE AREA EMERGENCY | GENERAL EMERGENCY |
|---|---|---|---|---|
| 3 Primary Containment<br>3.2 Wetwell Temperature/Pressure | | | Loss or potential loss of any two fission product barriers<br>3.2.S.2<br>1 2 3<br><br>Cannot maintain plant parameters within SRVTPLL or PSP<br>AND ANY of the following:<br>• Total RCS leakage GT 30 gpm inside PC or EDR-FRS-623, Pen 2 upscale high<br>• Containment Radiation Monitor CMS-RIS-27E and CMS-RIS-27F reading GT 70 R/hr<br>• Drywell pressure GT 1.68 psig with indications of RCS leakage inside drywell | |

# WNP-2 EMERGENCY CLASSIFICATION TABLE

| CATEGORY | UNUSUAL EVENT | ALERT | SITE AREA EMERGENCY | GENERAL EMERGENCY |
|---|---|---|---|---|
| 3 Primary Containment<br>3.3 Combustible Gas Concentration | | | | A loss of any two fission product barriers and loss or potential loss of the third<br>3.3.G.1<br>1 2 3<br><br>PC $H_2$ and $O_2$ concentrations GT 6% $H_2$ and 5% $O_2$ |
| 3.4 Containment Isolation Status | Loss or potential loss of primary containment<br>3.4.U.1<br>1 2 3<br><br>Failure of containment isolation valves (LCS Table 1.6.1.3-1) in any one line to close following auto or manual initiation<br>AND<br>downstream pathway outside primary containment exists | Main steam line break outside containment with isolation<br>3.4.A.1<br>1 2 3<br><br>Indications of a MSL break<br>AND<br>MSIV closure <u>has isolated</u> the break | Loss or potential loss of any two fission product barriers<br>3.4.S.1<br>1 2 3<br><br>Failure of containment isolation valves (LCS Table 1.6.1.3-1) in any one line to close following auto or manual initiation AND downstream pathway outside primary containment exists.<br>AND ANY of following:<br>• Total RCS leakage GT 30 gpm inside PC or EDR-FRS-623, Pen 2 upscale high<br>• Containment Radiation Monitor CMS-RIS-27E and CMS-RIS-27F reading GT 70 R/hr<br>• Drywell pressure GT 1.68 psig with indications of RCS leakage inside drywell<br>3.4.S.2<br>1 2 3<br><br>Indications of a MSL break<br>AND<br>MSIV closure <u>has not isolated</u> the break | A loss of any two fission product barriers and loss or potential loss of the third<br>3.4.G.1<br>1 2 3<br><br>Intentional venting of Primary Containment to prevent failure. |

# WNP-2 EMERGENCY CLASSIFICATION TABLE

| CATEGORY | UNUSUAL EVENT | ALERT | SITE AREA EMERGENCY | GENERAL EMERGENCY |
|---|---|---|---|---|
| 4 Secondary Containment<br>4.1 Reactor Building Temperature/ Radiation Levels | | | Loss or potential loss of any two fission product barriers<br>4.1.S.1<br>1 2 3<br><br>Unisolable primary system discharging outside PC resulting in any area temperature or radiation level above Maximum Safe Operating Values (as defined in the Emergency Operating Procedures). | A loss of any two fission product barriers and loss of potential loss of the third<br>4.1.G.1<br>1 2 3<br><br>Unisolable primary system discharging outside PC resulting in any area temperature or radiation level above Maximum Safe Operating Values (as defined in the Emergency Operating Procedures).<br>AND ANY of the following:<br>• Containment Radiation Monitor CMS-RIS-27E and CMS-RIS-27F reading GT 3,600 R/hr<br>• RPV level LT -161 inches or cannot be determined<br>• Coolant activity GT 300 $\mu$Ci/gm dose equivalent iodine |

Attachment 5.1

# WNP-2 EMERGENCY CLASSIFICATION TABLE

| CATEGORY | UNUSUAL EVENT | ALERT | SITE AREA EMERGENCY | GENERAL EMERGENCY |
|---|---|---|---|---|
| 5 Radioactivity Release<br>5.1 Offsite Release | Any unplanned release of gaseous or liquid radioactivity to the environment that exceeds two times ODCM limits for 60 minutes or longer<br>5.1.U.1<br>1 2 3 4 5 def<br><br>A valid reading exists which exceeds or is expected to exceed Table 3 column "UE" for GT 60 minutes<br>5.1.U.2<br>1 2 3 4 5 def<br><br>Offsite dose calculations indicate offsite dose rates GT Table 4 column "UE"<br>OR<br>Sample analysis indicates release GT 2 times ODCM 6.2.1.1 limits for GT 60 minutes | Any unplanned release of gaseous or liquid radioactivity to the environment that exceeds 200 times the radiological specifications for 15 minutes or longer<br>5.1.A.1<br>1 2 3 4 5 def<br><br>A valid reading exists which exceeds or is expected to exceed Table 3 column "Alert" for GT 15 minutes<br>5.1.A.2<br>1 2 3 4 5 def<br><br>Offsite dose calculations indicate dose rates GT Table 4 column "Alert"<br>OR<br>Sample analysis indicates release GT 200 times ODCM 6.2.1.1 limits for GT 15 minutes | Offsite dose resulting from an actual or imminent release of gaseous radioactivity that exceeds 100 mrem TEDE OR 500 mrem thyroid CDE for the actual OR projected duration of the release<br>5.1.S.1<br>1 2 3 4 5 def<br><br>A valid reading exists which exceeds or is expected to exceed Table 3 column "Site Area" for GT 15 minutes<br>5.1.S.2<br>1 2 3 4 5 def<br><br>Offsite dose calculations indicate doses or dose rates GT Table 4 column "Site Area"<br>OR<br>Field survey or survey sample analysis indicates offsite dose rates GT Table 4 column "Site Area" | Offsite dose resulting from an actual or imminent release of gaseous radioactivity that exceeds 1000 mrem total effective dose equivalent OR 5000 mrem thyroid committed dose equivalent for the actual OR projected duration of the release using actual meteorology<br>5.1.G.1<br>1 2 3 4 5 def<br><br>A valid reading exists which exceeds or is expected to exceed Table 3 column "General" for GT 15 minutes<br>5.1.G.2<br>1 2 3 4 5 def<br><br>Offsite dose calculations indicate doses or dose rates GT Table 4 column "General"<br>OR<br>Field survey or survey sample analysis indicates offsite dose rates GT Table 4 column "General". |

Attachment 5.1

# WNP-2 EMERGENCY CLASSIFICATION TABLE

| CATEGORY | UNUSUAL EVENT | ALERT | SITE AREA EMERGENCY | GENERAL EMERGENCY |
|---|---|---|---|---|
| 5 Radioactivity Release<br>5.2 Area Radiation | Unexpected increase in plant radiation levels<br><br>5.2.U.1<br>1 2 3 4 5 def<br><br>Valid reading GT 5E3 mR/hr on ANY of the following ARMs:<br>• ARM-RIS-4 thru ARM-RIS-18<br>• ARM-RIS-20 thru ARM-RIS-30<br>• ARM-RIS-32 thru ARM-RIS-34<br>(High Range) | Release of radioactive material or increases in radiation levels within the facility that impedes operation of systems required to maintain safe operation or to establish or maintain cold shutdown<br><br>5.2.A.1<br>1 2 3 4 5 def<br><br>Valid reading GT 15 mR/hr on ARM-RIS-19 (CR)<br>OR<br>Valid reading GT 1E4 mR/hr on ANY of the following ARMs:<br>• ARM-RIS-4 thru ARM-RIS-18<br>• ARM-RIS-23<br>• ARM-RIS-24<br>• ARM-RIS-32 thru ARM-RIS-34<br>(High Range) | | |

# WNP-2 EMERGENCY CLASSIFICATION TABLE

| CATEGORY | UNUSUAL EVENT | ALERT | SITE AREA EMERGENCY | GENERAL EMERGENCY |
|---|---|---|---|---|
| 6 Electrical Failures<br>6.1 AC Power Loss | Loss of all offsite power to critical AC busses for greater than 15 minutes<br>6.1.U.1<br>1 2 3 4 5 def<br>Power is unavailable to SM-7 and SM-8 from offsite AC sources GT 15 minutes | Loss of all offsite power and loss of all onsite power to critical AC busses for greater than 15 minutes<br>6.1.A.1<br>4 5 def<br>Complete loss of all AC power to SM-7 and SM-8 GT 15 minutes<br><br>Power capability to critical AC busses reduced to a single power source for greater than 15 minutes such that any additional single failure would result in station blackout.<br>6.1.A.2<br>1 2 3<br>Available emergency bus AC power has been reduced to only one of the following sources for GT 15 min<br>• TR-N1 (SM-7 and/or SM-8)<br>• TR-S (SM-7 and/or SM-8)<br>• TR-B (SM-7 and/or SM-8)<br>• DG-1 (SM-7)<br>• DG-2 (SM-8) | Loss of all offsite power and loss of all onsite power to critical AC busses for greater than 15 minutes<br>6.1.S.1<br>1 2 3<br>Complete loss of all AC power to SM-7 and SM-8 GT 15 minutes | Prolonged loss of all offsite power and prolonged loss of all onsite power to critical AC busses<br>6.1.G.1<br>1 2 3<br>Complete loss of all AC power to SM-7 and SM-8<br><br>AND either of the following:<br><br>In the judgement of the Emergency Director, AC power to either SM-7 or SM-8 is not likely to be restored within 4 hours<br>OR<br>RPV level LT -161 inches |
| 6.2 DC Power Loss | Degradation of all critical DC power for greater than 15 minutes.<br>6.2.U.1<br>4 5 def<br>Degradation of both Division 1 and Division 2 critical DC voltage as indicated by bus voltage LT 110 VDC on both 125 V Dist. Panels S1-1 and S1-2 voltmeters (Bd. C) for GT 15 minutes | | Degradation of all critical DC power for greater than 15 minutes<br>6.2.S.1<br>1 2 3<br>Degradation of both Division 1 and Division 2 critical DC voltage as indicted by bus voltage LT 110 VDC on both 125 V Dist. Panels S1-1 and S1-2 voltmeters (Bd. C) for GT 15 minutes | |

Attachment 5.1

# WNP-2 EMERGENCY CLASSIFICATION TABLE

| CATEGORY | UNUSUAL EVENT | ALERT | SITE AREA EMERGENCY | GENERAL EMERGENCY |
|---|---|---|---|---|
| 7 Equipment Failures<br>7.1 System Failures | Inability to reach required shutdown within technical specification limits<br>7.1.U.1<br>1 2 3<br><br>Plant is not brought to required operating mode within T.S. LCO action statement time<br>7.1.U.2<br>1 2 3 4 5 def<br><br>Uncontrolled flooding in a safe shutdown building, Table 5, that has the potential to affect safety related equipment needed for the current operating mode | Inability to maintain plant in cold shutdown<br>7.1.A.1<br>4 5<br><br>Inability to restore and maintain reactor coolant temp LT 200°F<br>7.1.A.2<br>1 2 3 4 5 def<br><br>Report by plant personnel confirming the occurrence of plant uncontrolled internal flooding in a safe shutdown building, Table 5<br>AND<br>Affected safe shutdown system parameters indicate degraded performance | | |
| 7.2 Control Room Evacuation | | Control room evacuation has been initiated<br>7.2.A.1<br>1 2 3 4 5<br><br>The decision to evacuate the Control Room has been made. | Control room evacuation has been initiated, but plant control CANNOT be established<br>7.2.S.1<br>1 2 3 4 5<br><br>CR evacuation initiated<br>AND<br>Control of plant equipment needed to maintain adequate core cooling cannot be established at either the Remote Shutdown Panel or Alternate Remote Shutdown panel within 15 minutes of the SRO in charge of the CR physically leaving the CR | |

Attachment 5.1

# WNP-2 EMERGENCY CLASSIFICATION TABLE

| CATEGORY | UNUSUAL EVENT | ALERT | SITE AREA EMERGENCY | GENERAL EMERGENCY |
|---|---|---|---|---|
| 7 Equipment Failures<br>7.3 Loss of Indications/ Communications | Unplanned loss of most or all safety system annunciators or indication in the control room for greater than 15 minutes<br>7.3.U.1<br>1 2 3<br><br>Unplanned loss of most or all annunciators on P601, P602, P603, and Bd. C associated with safety related equipment GT 15 minutes | Unplanned loss of most or all safety system annunciators or indications in the control room with EITHER: 1) a significant transient in progress; OR 2) Compensatory non-alarming indicators are unavailable<br>7.3.A.1<br>1 2 3<br><br>Unplanned loss of most or all annunciators on P601, P602, P603, and Bd C associated with safety related equipment GT 15 minutes<br><br>AND either of the following:<br>A significant plant transient is in progress<br>OR<br>Compensatory non-alarming indications are not available (plant computer system and GDS) | Inability to monitor a significant transient in progress.<br>7.3.S.1<br>1 2 3<br><br>Loss of most or all annunciators on P601, P602, P603 and Bd. C associated with safety related equipment<br>AND<br>Compensatory nonalarming indications are unavailable (process computer system and GDS)<br>AND<br>Significant transient in progress<br>AND<br>Loss of indications needed to monitor ANY of the following plant critical safety parameters:<br>• Reactor power<br>• RPV level<br>• RPV pressure<br>• Drywell pressure<br>• Drywell temperature<br>• Wetwell pressure<br>• Wetwell/Drywell H2/O2 Concentrations<br>• Wetwell level<br>• Wetwell temperature<br>• Radioactive Gaseous Effluents | |
| | Significant loss of onsite OR offsite communications capabilities<br>7.3.U.2<br>1 2 3 4 5 def<br><br>Unplanned loss of ALL of the following onsite communications capability:<br>• Plant Public Address (PA) System<br>• Plant Telephone System<br>• Plant Radio System Operations and Security Channels | | | |

Attachment 5.1

# WNP-2 EMERGENCY CLASSIFICATION TABLE

| CATEGORY | UNUSUAL EVENT | ALERT | SITE AREA EMERGENCY | GENERAL EMERGENCY |
|---|---|---|---|---|
| 7 Equipment Failures<br>7.3 Loss of Indications/ Communications | Significant loss of onsite or offsite communications capabilities<br><br>7.3.U.3<br>1 2 3 4 5 def<br><br>Unplanned loss of ALL of the following offsite communications capability:<br>• State/County Notification (CRASH) System<br>• Offsite calling capability from the Control Room via direct telephone and fax lines<br>• Long distance calling capability on the Plant ("2000") Switch and Plant Support Facility/Plant Engineering Center ("8000") Switch | | | |

# WNP-2 EMERGENCY CLASSIFICATION TABLE

| CATEGORY | UNUSUAL EVENT | ALERT | SITE AREA EMERGENCY | GENERAL EMERGENCY |
|---|---|---|---|---|
| 8 Hazards<br>8.1 Security Threats | Confirmed security event which indicates a potential degradation in the level of safety of the plant<br>8.1.U.1<br>1 2 3 4 5 def<br><br>Bomb device discovered within plant protected area but outside a Safe Shutdown Building, Table 5<br>OR<br>Confirmed report of an attempted entry, sabotage or security threat that cannot be properly compensated for within 10 minutes | Security event in a Plant Protected Area<br>8.1.A.1<br>1 2 3 4 5 def<br><br>Confirmed report of an intrusion by a hostile force into the Plant Protected Area | Security event in a Plant Vital Area<br>8.1.S.1<br>1 2 3 4 5 def<br><br>Bomb device discovered or detonated within a Safe Shutdown Building, Table 5<br>OR<br>Confirmed report of intrusion by a hostile force into a Safe Shutdown Building, Table 5 | Security event resulting in loss of ability to reach and maintain cold shutdown<br>8.1.G.1<br>1 2 3 4 5 def<br><br>Loss of physical control of the CR due to security event<br>OR<br>Loss of physical control of the remote shutdown capability due to security event |
| 8.2 Fire/Explosion Caused by Equipment Failure | Fire within the Protected Area Boundary not extinguished within 15 minutes of detection OR an explosion within Protected Area Boundary<br>8.2.U.1<br>1 2 3 4 5 def<br><br>Fire within or adjacent to any Safe Shutdown Building, Table 5, which is not extinguished within 15 minutes of either CR notification by plant personnel or validation of alarm<br>OR<br>Report by plant personnel of an unplanned explosion within the Protected Area boundary resulting in visible damage to permanent structures or equipment | Fire or explosion affecting the operability of plant safety systems required to establish or maintain safe shutdown<br>8.2.A.1<br>1 2 3 4 5 def<br><br>Confirmed fire or explosion in a safe shutdown building, Table 5<br>AND either of the following:<br>Affected safe shutdown system parameters indicate degraded performance<br>OR<br>Report by plant personnel of visible damage to the affected safe shutdown building or equipment contained within the affected safe shutdown building | | |

# WNP-2 EMERGENCY CLASSIFICATION TABLE

| CATEGORY | UNUSUAL EVENT | ALERT | SITE AREA EMERGENCY | GENERAL EMERGENCY |
|---|---|---|---|---|
| 8 Hazards<br>8.3 Man-Made Events | Natural and destructive phenomena affecting the Protected Area Boundary<br>8.3.U.1<br>1 2 3 4 5 def<br><br>Vehicle crash into or projectile which impacts a Safe Shutdown Building, Table 5<br>8.3.U.2<br>1 2 3<br><br>Turbine failure resulting in casing penetration or damage to turbine or generator seals | Natural and destructive phenomena affecting Safe Shutdown Buildings<br>8.3.A.1<br>1 2 3 4 5 def<br><br>Vehicle crash or projectile impact which impedes access to or damages equipment in a Safe Shutdown Building, Table 5<br>8.3.A.2<br>1 2 3<br><br>Missiles generated from a turbine failure have resulted in visible structural damage to or penetration of a safe shutdown building, Table 5 | | |
| | Release of toxic or flammable gases affecting the Protected Area Boundary deemed detrimental to safe operation of the plant.<br>8.3.U.3<br>1 2 3 4 5 def<br><br>Report or detection of toxic or flammable gases that could enter or have entered within the Protected Area Boundary in amounts that could affect the health of plant personnel or safe plant operation<br>OR<br>Report by local, county or state officials for evacuation or shelter of site personnel based on offsite event | Release of toxic or flammable gases within a facility structure which jeopardizes operation of systems required to maintain safe operations or to establish or maintain cold shutdown.<br>8.3.A.3<br>1 2 3 4 5 def<br><br>Report or detection of toxic or flammable gases within a safe shutdown building, Table 5, in concentrations that will be life threatening to plant personnel or impede access to equipment needed for safe plant operation. | | |

# WNP-2 EMERGENCY CLASSIFICATION TABLE

| CATEGORY | UNUSUAL EVENT | ALERT | SITE AREA EMERGENCY | GENERAL EMERGENCY |
|---|---|---|---|---|
| 8 Hazards<br>8.4 Natural Events | Natural and destructive phenomena affecting the Protected Area Boundary<br><br>8.4.U.1<br>1 2 3 4 5 def<br><br>MINIMUM SEISMIC EARTHQUAKE alarm (H13-P851-S1-2.5)<br>AND<br>CR receives report from plant personnel who have felt an earthquake<br><br>8.4.U.2<br>1 2 3 4 5 def<br><br>Weather Service projected winds GT 80 mph<br>OR<br>CR measured winds GT 66 mph (5 minute average at 33 ft)<br>OR<br>Report by plant personnel confirming the occurrence of a tornado striking within the Protected Area Boundary<br><br>8.4.U.3<br>1 2 3 4 5 def<br><br>Range fires near the plant which threaten to reduce the level of safety | Natural and destructive phenomena affecting Safe Shutdown Buildings<br><br>8.4.A.1<br>1 2 3 4 5 def<br><br>OPERATING BASIS EARTHQUAKE alarm (H13-P851-S1-5.1)<br>AND<br>CR receives report from plant personnel who have felt an earthquake<br><br>8.4.A.2<br>1 2 3 4 5 def<br><br>Weather Service projected winds GT 100 mph<br>OR<br>CR measured winds GT 76 mph ( 5 minute average at 33 ft)<br>OR<br>Report by plant personnel confirming the occurrence of a tornado striking a plant safe shutdown building, Table 5<br><br>8.4.A.3<br>1 2 3 4 5 def<br><br>Ash fallout from volcanic activity is severe enough to warrant plant shutdown | | |

# WNP-2 EMERGENCY CLASSIFICATION TABLE

| CATEGORY | UNUSUAL EVENT | ALERT | SITE AREA EMERGENCY | GENERAL EMERGENCY |
|---|---|---|---|---|
| 8 Hazards<br>8.4 Natural Events | Natural and destructive phenomena affecting the Protected Area Boundary<br>8.4.U.4<br>1 2 3 4 5 def<br><br>Visible ash fallout from volcanic activity<br>8.4.U.5<br>1 2 3 4 5 def<br><br>River level increase which threatens to flood the river pumphouse | Natural and destructive phenomena affecting Safe Shutdown Buildings<br>8.4.A.4<br>1 2 3 4 5 def<br><br>Report by plant personnel of an event causing visible structural damage to a safe shutdown building, Table 5 | | |

# WNP-2 EMERGENCY CLASSIFICATION TABLE

| CATEGORY | UNUSUAL EVENT | ALERT | SITE AREA EMERGENCY | GENERAL EMERGENCY |
|---|---|---|---|---|
| 9 Other<br>9.1 Other | Other conditions existing which, in the judgement of the Emergency Director, warrant declaration of an Unusual Event.<br>9.1.U.1<br>1 2 3 4 5 def<br>In the judgement of the Emergency Director, events are in progress or have occurred, which indicate a potential degradation of the level of safety of the plant | Other conditions existing which, in the judgement of the Emergency Director, warrant declaration of an Alert.<br>9.1.A.1<br>1 2 3 4 5 def<br>In the judgement of the Emergency Director, events are in progress or have occurred which indicate actual or potential substantial degradation of the level of safety of the plant | Other conditions existing which, in the judgement of the Emergency Director, warrant declaration of a Site Area Emergency<br>9.1.S.1<br>1 2 3 4 5 def<br>In the judgement of the Emergency Director, events are in progress or have occurred which involve actual or likely major failures of plant functions needed for protection of the public | Other conditions existing which, in the judgement of the Emergency Director, warrant declaration of a General Emergency<br>9.1.G.1<br>1 2 3 4 5 def<br>In the judgement of the Emergency Director, other conditions exist which indicate either of the following:<br>Actual or imminent substantial core degradation or melting with the potential for loss of containment integrity<br>OR<br>Potential for uncontrolled radionuclide releases which can reasonably be expected to exceed EPA PAG plume exposure levels outside the site boundary |
| | Loss OR potential loss of Primary Containment<br>9.1.U.2<br>1 2 3<br>Any event, in the judgement of the Emergency Director, that could lead to or has led to a loss or potential loss of primary containment as indicted by Fission Product Barrier Degradation Table, Table 6 | Loss OR potential loss of fuel clad or RCS<br>9.1.A.2<br>1 2 3<br>Any event, in the judgement of the Emergency Director, that could lead or has led to a loss or potential loss of either fuel clad or RCS barrier as indicted by Fission Product Barrier Degradation Table, Table 6 | Loss or potential loss of any two fission product barriers<br>9.1.S.2<br>1 2 3<br>Any event, in the judgement of the Emergency Director, that could lead or has led to a loss or potential loss of any two fission product barriers as indicted by Fission Product Barrier Degradation Table, Table 6 | A loss of any two fission product barriers and loss or potential loss of the third<br>9.1.G.2<br>1 2 3<br>Any event, in the judgement of the Emergency Director, that could lead or has led to a loss of any two fission product barriers and loss or potential loss of the third as indicated by Fission Product Barrier Degradation Table, Table 6 |

# WNP-2 EMERGENCY CLASSIFICATION TABLE

## TABLE 6 FISSION PRODUCT BARRIER DEGRADATION TABLE

| Fuel Clad Loss | Fuel Clad Potential Loss | RCS Loss | RCS Potential Loss | PC Loss | PC Potential Loss |
|---|---|---|---|---|---|
| Coolant activity GT 300 $\mu$Ci/gm dose equivalent iodine | RPV level LT -161 inches | Containment Radiation Monitor CMS-RIS-27E and CMS-RIS-27F reading GT 70 R/hr | Total RCS leakage GT 30 gpm inside PC or EDR-FRS-623, Pen 2 upscale high | Rapid unexplained decrease of PC pressure following an initial increase | Containment Radiation Monitor CMS-RIS-27E and CMS-RIS-27F reading GT 14,000 R/hr |
| Containment Radiation Monitor CMS-RIS-27E and CMS-RIS-27F reading GT 3,600 R/hr | | RPV level LT -161 inches | Unisolable primary system discharging outside PC resulting in any area temperature or radiation level above Maximum Safe Operating Values (PPM 5.3.1, "Secondary Containment Control") | Drywell pressure response not consistent with LOCA conditions | PC $H_2$ and $O_2$ concentrations GT 6% $H_2$ and 5% $O_2$ |
| Entry into Severe Accident Guidelines | | Drywell pressure GT 1.68 psig with indications of RCS leakage inside drywell | | Failure of containment isolation valves (LCS Table 1.6.1.3-1) in any one line to close following auto or manual initiation AND downstream pathway outside primary containment exists OR Unisolable primary system discharging outside PC resulting in any area temperature or radiation level above Maximum Safe Operating Values (PPM 5.3.1,"Secondary Containment Control") | Entry into Severe Accident Guidelines<br>Loss of pressure suppression function<br>Cannot maintain plant parameters within HCTL or SRVTPLL |
| | | | | Intentional venting per PPM 5.2.1, "Primary Containment Control" | Wetwell pressure exceeds PSP<br>PC pressure exceeds PCPL |
| Any event, in the judgement of the Emergency Director, that could lead or has led to a loss or potential loss of the fuel clad barrier | | Any event, in the judgement of the Emergency Director, that could lead or has led to a loss or potential loss of the RCS barrier | | Any event, in the judgement of the Emergency Director, that could lead to or has led to a loss or potential loss of primary containment barrier | |

Attachment 5.1

# WNP-2 EMERGENCY CLASSIFICATION TABLE

| Table 1 RCS Barrier Loss Indicators |
|---|
| • Containment Radiation Monitor CMS-RIS-27E and CMS-RIS-27F reading GT 70 R/hr |
| • RPV level LT -161 inches |
| • Drywell pressure GT 1.68 psig with indications of RCS leakage inside drywell |

| Table 2 PC Barrier Loss Indicators |
|---|
| • Rapid unexplained decrease of PC pressure following an initial increase |
| • Failure of containment isolation valves (LCS Table 1.6.1.3-1) in any one line to close following auto or manual initiation<br>AND<br>downstream pathway outside primary containment |

TABLE 3

| Table 3 Effluent Monitor Classification Thresholds | | | | |
|---|---|---|---|---|
| Monitor | UE | Alert | Site Area | General |
| NOTE: If a dose projection cannot be performed, and the monitor reading is sustained for longer than the specified time then the declaration must be made based on the valid reading. | | | | |
| | 60 minutes | 15 minutes | 15 minutes | 15 minutes |
| PRM-RE-1B<br>Reactor Bldg. Exhaust Inter. | 1.35E4 cps | N/A | N/A | N/A |
| PRM-RE-1C<br>Reactor Bldg. Exhaust Hi | N/A | 1.14E3 cps | 9.65E3 cps | 9.35E4 cps |
| TEA-RIS-13/13A<br>Turbine Bldg. Exhaust | 1.7E4 cpm | 4.4E4 cpm | 4.4E5 cpm | 8 PMU |
| WEA-RIS-14/14A<br>RadWaste Bldg. Exhaust | 1.2E5 cpm | 1.7E5 cpm | 1.7E6 cpm | 26 PMU |
| TSW-RIS-5<br>TSW Effluent | 3.9E3 cpm | 3.9E5 cpm | N/A | N/A |
| FDR-RIS-606<br>Rad. Waste Effluent | 2 x Hi-Hi alarm | 200 x Hi-Hi alarm | N/A | N/A |
| SW-RIS-604<br>SW 'A' Process | 2.0E2 cps | 2.0E4 cps | N/A | N/A |
| SW-RIS-605<br>SW 'B' Process | 2.0E2 cps | 2.0E4 cps | N/A | N/A |

Attachment 5.1

# WNP-2 EMERGENCY CLASSIFICATION TABLE

## TABLES 4 & 5

cps = counts per second  cpm = counts per minute  PMU = panel meter units  N/A = not applicable (outside of meter range)

Table 4 Offsite Dose Calculation/Field Survey Sample Analysis Classification Thresholds at 1.2 miles

| | UE | Alert | Site Area | General |
|---|---|---|---|---|
| TEDE | N/A | N/A | 100 mrem | 1000 mrem |
| CDE Thyroid | N/A | N/A | 500 mrem | 5000 mrem |
| TEDE rate | 0.1 mrem/hr | 10 mrem/hr | 100 mrem/hr (projected GT 60 min) | 1000 mrem/hr (projected GT 60 min) |
| CDE Thyroid rate | 0.3 mrem/hr | 50 mrem/hr | 500 mrem (for GT 1 hr inhalation) | 5000 mrem (for GT 1 hr inhalation) |

Table 5 Safe Shutdown Buildings

- Vital portions of the RadWaste/Control Building
- Reactor Building
- Turbine Building
- Standby Service Water Pump Houses
- Diesel Generator Building
- Diesel Generator Fuel Oil Storage Area

## WNP-2 EMERGENCY CLASSIFICATION CHART DISTRIBUTION

NOTE: The Emergency Classification Chart is provided in a separate, controlled distribution to the following locations:

| Location | No. Of Copies |
|---|---|
| Control Room | 2 |
| Technical Support Center | 2 |
| Emergency Operations Facility | 2 |
| Control Room Simulator | 2 |
| Remote Shutdown Room | 1 |
| Simulator Remote S/D Room | 1 |

| | | |
|---|---|---|
| ENERGY NORTHWEST | | USE CURRENT REVISION |
| COLUMBIA GENERATING STATION<br>PLANT PROCEDURES MANUAL | | |
| PROCEDURE NUMBER<br>*13.1.1A | APPROVED BY<br>DWC - Revision 6 | DATE<br>09/06/00 |
| VOLUME NAME<br>EMERGENCY PLAN IMPLEMENTING PROCEDURES | | |
| SECTION<br>EMERGENCY CLASSIFICATION | | |
| TITLE<br>CLASSIFYING THE EMERGENCY - TECHNICAL BASES | | |

## TABLE OF CONTENTS

Page


1.0 PURPOSE . . . . . 2

2.0 REFERENCES . . . . . 2

3.0 PROCEDURE . . . . . 4
- 3.1 Plant Emergency Response Personnel Responsibilities . . . . . 4
- 3.2 Use Of Plant Instruments And Indications . . . . . 4
- 3.3 Emergency Class Description . . . . . 4
- 3.4 Mode Applicability . . . . . 5

4.0 ATTACHMENTS . . . . . 5
- 4.1 EAL Technical Bases . . . . . 6
- 4.2 Fission Product Barrier Degradation Table Bases . . . . . 153

## 1.0 PURPOSE

The purpose of this procedure is to provide Plant Emergency Response Organization personnel tasked with classifying the emergency the technical bases for the Emergency Action Levels (EAL) listed in PPM 13.1.1, "Classifying The Emergency".

It is not necessary to refer to this procedure to classify the emergency. The emergency classification may be determined by utilizing the guidance contained within PPM 13.1.1. However, Plant Emergency Response Organization personnel may refer to this procedure for supplemental information or clarification of EAL interpretation.

## 2.0 REFERENCES

2.1 WNP-2 Technical Specifications

2.2 WNP-2 Offsite Dose Calculation Manual

2.3 WNP-2 FSAR Section 1.5.2, SBO Coping Study

2.4 WNP-2 FSAR Section 8.3.2.1, Batteries

2.5 WNP-2 FSAR Table 9.5-8, Location of Emergency Lighting

2.6 WNP-2 FSAR Chapter 3.2, Classification of Structures, Components and Systems

2.7 Calculation CE-02-93-16 (Wind Speed Triggers for UE/Alert Declaration)

2.8 Calculation 2.05.01 (Battery Size Calc)

2.9 NEI 97-03, draft final rev. 3, "Methodology for Development of Emergency Action Levels"

2.10 NUMARC/NRC, "Questions & Answers", June 1993

2.11 NUREG/CR-4982, "Severe Accident in Spent Fuel Pools in Support of Generic Safety Issue 82"

2.12 NUREG-0737, "Clarification of TMI Action Plan Requirements"

2.13 10CFR20, Standards for Protection Against Radiation

2.14 10CFR50, Domestic Licensing of Production and Utilization Facilities

2.15 EPA 400, "Manual of Protective Action Guidelines and Protective Actions for Nuclear Incidents"

2.16 FSAR, Chapter 13.3, Emergency Preparedness Plan, Section 6

REFERENCES, (cont'd)

2.17 NUREG-0654/FEMA-REP-1, Rev. 1, Appendix 1 ("Basis For Emergency Action Levels For Nuclear Power Facilities")

2.18 WNP-2 Safeguards Contingency Plan

2.19 PPM 4.12.1.1, Control Room Evacuation and Remote Cooldown

2.20 PPM 4.12.4.2, Flood

2.21 PPM 4.12.4.8, Tornado/High Winds

2.22 PPM 4.12.4.10, Reactor Building 422' Area Flooding

2.23 PPM 5.0.10, EOP Flowchart Training Manual

2.24 PPM 5.1.2, RPV Control-ATWS

2.25 PPM 5.1.7, Primary Containment Flooding

2.26 PPM 9.3.22, Core Damage Evaluation

## 3.0 PROCEDURE

### 3.1 Plant Emergency Response Personnel Responsibilities

Plant Emergency Response Personnel may refer to the Technical Bases in this procedure for emergency classification and after-the-fact review of emergency action levels.

### 3.2 Use Of Plant Instruments And Indications

Plant instrumentation described in each EAL in Attachment 4.1 is the primary instrumentation to be used. This does not preclude use of other instruments as alternate indication, as appropriate, to properly classify the emergency.

All conditions defined within the EALs are to be evaluated based on the existence of valid indications. An indication or reported condition is considered to be valid when it is conclusively verified by:

- An instrument channel check; or
- Indications on related or redundant indicators; or
- By direct observation by plant personnel, such that doubt related to the indicator's operability, the condition's existence, or the report's truth is removed.

Implicit in this definition is the need for timely assessment.

### 3.3 Emergency Class Description

The following is a description of the four classes of emergency:

UNUSUAL EVENT: Unusual events are in process or have occurred which indicate a potential degradation of the level of safety of the plant. No releases of radioactive material requiring offsite response or monitoring are expected unless further degradation of safety systems occurs.

ALERT: Events are in process or have occurred which involve an actual or potential substantial degradation of the level of safety of the plant. Any releases are expected to be limited to small fractions of the EPA Protective Action Guideline exposure levels.

SITE AREA EMERGENCY: Events are in process or have occurred which involve actual or likely major failures of plant functions needed for protection of the public. Any releases are not expected to result in exposure levels which exceed EPA Protective Action Guideline exposure levels except near the site boundary.

GENERAL EMERGENCY: Events are in process or have occurred which involve actual or imminent substantial core degradation or melting with potential for loss of containment integrity. Releases can be reasonably expected to exceed EPA Protective Action Guideline exposure levels offsite for more than the immediate site area.

3.4 Mode Applicability

The operational conditions (modes) in which Initiating Conditions are applicable are indicated by a series of boxes as follows:

| Operating Conditions | 1 | 2 | 3 | 4 | 5 | def |
|---|---|---|---|---|---|---|

where the numbers indicate operational conditions as defined in Technical Specifications and Def indicates "Defueled" or all fuel removed from the reactor vessel.

4.0 ATTACHMENTS

4.1 EAL Technical Bases

4.2 Fission Product Barrier Degradation Table Bases

## 1 REACTOR FUEL

The reactor fuel cladding serves as the primary fission product barrier. Over the useful life of a fuel bundle, the integrity of this barrier should remain intact as long as fuel cladding integrity limits are not exceeded.

Should fuel damage occur (breach of the fuel cladding integrity) radioactive fission products are released to the reactor coolant. The magnitude of such a release is dependent upon the extent of the damage as well as the mechanism by which the damage occurred. Once released into the reactor coolant, the highly radioactive fission products can pose significant radiological hazards in plant from reactor coolant process streams. If other fission product barriers were to fail, these radioactive fission products can pose significant offsite radiological consequences.

The following parameters/indicators are indicative of possible fuel failures:

- Coolant Activity: During normal operation, reactor coolant fission product activity is very low. Small concentrations of fission products in the coolant are primarily from either the fission of tramp uranium in the fuel cladding or minor perforations in the cladding itself. Any significant increase from these base-line levels is indicative of fuel failures.

- Radiation Monitors: As with coolant activity, any fuel failures will release fission products to the reactor coolant. Those products which are gaseous or volatile in nature will be carried over with the steam and eventually be detected by the air ejector off-gas radiation monitors. Although not a direct indication or measurement of fuel damage, exceeding predetermined limits on containment high range radiation monitors under LOCA conditions is indicative of possible fuel failures. In addition, this indicator is utilized as an indicator of RCS loss and potential containment loss.

- Refueling Incidents: Both area and process radiation monitoring systems designed to detect fission products during refueling conditions as well as visual observation can be utilized to indicate loss or potential loss of spent fuel cladding integrity .

1 Reactor Fuel 1.1 Coolant Activity

1.1.U.1 Unusual Event

NUMARC IC: SU4 - Fuel Clad Degradation.

APPLICABILITY:

| Operating Conditions | 1 | 2 | 3 | 4 | | |
|---|---|---|---|---|---|---|

EMERGENCY ACTION LEVEL:

RCS sample activity GT Technical Specification 3.4.8 for GT LCO Action Statement time.

BASES:

This Initiating Condition is considered to be a potential degradation in the level of safety of the plant and a potential precursor of more serious problems.

Coolant activity in excess of allowable Technical Specifications reflects a degraded or degrading core condition and represent a decrease in plant safety.

REFERENCE(S):

WNP-2 Technical Specifications

NUMARC NESP-007, Methodology for Development of Emergency Action Levels, Rev. 2, Unusual Event SU4

WNP-2 Plant Specific EAL Guideline, SU4.2

1 Reactor Fuel 1.1 Coolant Activity

1.1.A.1 Alert

NUMARC IC: Loss or potential loss of fuel clad

APPLICABILITY:

| Operating Conditions | 1 | 2 | 3 | | | |
|---|---|---|---|---|---|---|

EMERGENCY ACTION LEVEL:

Coolant activity GT 300 $\mu$Ci/gm dose equivalent iodine

BASES:

This EAL is indicative of the loss of the fuel clad barrier. Fuel Clad barrier damage is indicated by a coolant activity of 300 $\mu$Ci/gm dose equivalent I-131. This amount of activity is well above that expected for iodine spikes and corresponds to approximately 2-5% fuel clad failure in accordance with assessment performed by the NUMARC EAL task force. This amount of clad failure indicates significant clad heating and, thus, the Fuel Clad barrier is considered lost.

REFERENCE(S):

WNP-2 Technical Specifications

NUMARC NESP-007, Methodology for Development of Emergency Action Levels, Rev. 2, Fission Product Barrier Basis Information for Table 3

WNP-2 Fission Product Barrier Evaluation

WNP-2 Plant Specific EAL Guideline, FC1.1

1 Reactor Fuel 1.1 Coolant Activity

1.1.S.1 Site Area Emergency

NUMARC IC: Loss or potential loss of any two fission product barriers

APPLICABILITY:

| Operating Conditions | 1 | 2 | 3 | | | |
|---|---|---|---|---|---|---|

EMERGENCY ACTION LEVEL:

Coolant activity GT 300 $\mu$Ci/gm dose equivalent iodine

AND ANY of the following:

- Any RCS Loss Indicators, Table 1
- Total RCS leakage GT 30 gpm inside PC or EDR-FRS-623, Pen 2 upscale high
- Any PC Loss Indicators, Table 2
- Cannot maintain plant parameters within SRVTPLL or PSP

BASES:

This EAL represents loss of the fuel clad barrier (coolant activity GT 300 $\mu$Ci/gm dose equivalent iodine) in combination with indications of a loss of RCS (Table 1) or potential loss of RCS (Total RCS leakage GT 30 gpm inside PC or EDR-FRS-623, Pen 2 upscale high) or loss of PC (Table 2) or potential loss of PC (Cannot maintain plant parameters within SRVTPLL or PSP).

Fuel Clad barrier damage is indicated by a coolant activity of 300 $\mu$Ci/gm dose equivalent I-131. This amount of activity is well above that expected for iodine spikes and corresponds to approximately 2-5% fuel clad failure in accordance with assessment performed by the NUMARC EAL task force. This amount of clad failure indicates significant clad heating and, thus, the Fuel Clad barrier is considered lost.

Total leakage is considered to be the total of both identified and unidentified leakage as measured on EDR-FRS-623 pen 1 (unidentified - Floor Drain Sump Fill Rate) and pen 2 (identified - Equipment Drain Sump Fill Rate). The maximum measurable identified leak rate (pen 2) in the Control Room at WNP-2 is 30 gpm, therefore 30 gpm is used instead of the 50 gpm limit recommended by NUMARC.

The inability to maintain plant parameters within the SRVTPLL or PSP represents a potential loss of PC.

> The SRV Tail Pipe Level Limit (SRVTPLL) is the highest wetwell water level at which the opening of an SRV will not result in exceeding the code allowable stresses in the tailpipe, tailpipe supports, quenchers or quencher supports. This level is a function of RPV pressure and the Limit is utilized to preclude SRV system failure and containment failure. The consequences of operating SRVs when wetwell water level exceeds SRVTPLL may include direct pressurization of the containment from a break in the SRV tailpipe. The resulting primary containment pressurization could cause containment failure.

Entry into the unsafe region of the Pressure Suppression Pressure curve (PPM 5.2.1, "Primary Containment Control", Figure F, PSP) is included as a potential primary containment barrier loss. A rapid depressurization of the RPV (e.g., occurrence of a large break LOCA or initiation of ADS) at wetwell pressures in excess of the PSP may cause either:

- Wetwell pressure responses indicative of failure in the drywell-to-wetwell boundary, or
- Wetwell pressure increases to or beyond the Primary Containment Pressure Limit (PPM 5.2.1, "Primary Containment Control", Figure B, PCPL).

Refer to Attachment 4.2 for the bases of each of the following referenced barrier loss/potential loss indicators.

| Table 1 RCS Barrier Loss Indicators |
|---|
| • Containment Radiation Monitor CMS-RIS-27E and CMS-RIS-27F reading GT 70 R/hr<br>• RPV level LT -161 in.<br>• Drywell pressure GT 1.68 psig with indications of RCS leakage inside drywell |

| Table 2 PC Barrier Loss Indicators |
|---|
| • Rapid unexplained decrease of PC pressure following an initial increase<br>• Failure of containment isolation valves (LCS Table 1.6.1.3-1) in any one line to close following auto or manual initiation<br>AND<br>downstream pathway outside primary containment exists |

REFERENCE(S):

WNP-2 Technical Specifications

NUMARC NESP-007, Methodology for Development of Emergency Action Levels, Rev. 2, Fission Product Barrier Basis Information for Table 3

WNP-2 Fission Product Barrier Evaluation

WNP-2 Plant Specific EAL Guideline, FC1.1 + RCS3.1, RCS2.1, RCS1.2, PC1.1, PC2.1

1 Reactor Fuel 1.1 Coolant Activity

1.1.G.1 General Emergency

NUMARC IC: A loss of any two fission product barriers and loss or potential loss of the third

APPLICABILITY:

| Operating Conditions | 1 | 2 | 3 | | | |
|---|---|---|---|---|---|---|

EMERGENCY ACTION LEVEL:

Coolant activity GT 300 $\mu$Ci/gm dose equivalent iodine
AND
Drywell pressure response not consistent with LOCA conditions

BASES:

This EAL represents loss of the fuel clad barrier (coolant activity GT 300 $\mu$Ci/gm dose equivalent iodine) in combination with an indication of a loss of both RCS and PC (Drywell pressure response not consistent with LOCA conditions).

Fuel Clad barrier damage is indicated by a coolant activity of 300 $\mu$Ci/gm dose equivalent I-131. This amount of activity is well above that expected for iodine spikes and corresponds to approximately 2-5% fuel clad failure in accordance with assessment performed by the NUMARC EAL task force. This amount of clad failure indicates significant clad heating and, thus, the Fuel Clad barrier is considered lost.

Containment or drywell pressure responses not consistent with LOCA conditions indicate a loss of the Primary Containment barrier. This may be noticed as a decrease in drywell pressure when no operation action (e.g., starting drywell cooling fans) has been taken. It would also include a failure of the drywell pressure to increase as expected during a LOCA.

REFERENCE(S):

WNP-2 Technical Specifications

NUMARC NESP-007, Methodology for Development of Emergency Action Levels, Rev. 2, Fission Product Barrier Basis Information for Table 3

WNP-2 Fission Product Barrier Evaluation

1 Reactor Fuel 1.1 Coolant Activity

1.1.G.2 General Emergency

NUMARC IC: A loss of any two fission product barriers and loss or potential loss of the third

APPLICABILITY:

| Operating Conditions | 1 | 2 | 3 | | | |
|---|---|---|---|---|---|---|

EMERGENCY ACTION LEVEL:

Coolant activity GT 300 $\mu$Ci/gm dose equivalent iodine
AND
Total RCS leakage GT 30 gpm inside PC or EDR-FRS-623, Pen 2 upscale high
AND
Any PC Loss Indicators, Table 2

BASES:

This EAL represents loss of the fuel clad barrier (coolant activity GT 300 $\mu$Ci/gm dose equivalent iodine) in combination with an indication of a potential loss of RCS (Total RCS leakage GT 30 gpm inside PC or EDR-FRS-623, Pen 2 upscale high) and loss of PC (Any PC Loss Indicators, Table 2).

Fuel Clad barrier damage is indicated by a coolant activity of 300 $\mu$Ci/gm dose equivalent I-131. This amount of activity is well above that expected for iodine spikes and corresponds to approximately 2-5% fuel clad failure in accordance with assessment performed by the NUMARC EAL task force. This amount of clad failure indicates significant clad heating and, thus, the Fuel Clad barrier is considered lost.

Total leakage is considered to be the total of both identified and unidentified leakage as measured on EDR-FRS-623 pen 1 (unidentified - Floor Drain Sump Fill Rate) and pen 2 (identified - Equipment Drain Sump Fill Rate). The maximum measurable identified leak rate (pen 2) in the Control Room at WNP-2 is 30 gpm, therefore 30 gpm is used instead of the 50 gpm limit recommended by NUMARC.

Refer to Attachment 4.2 for the bases of each of the following PC barrier loss indicators:

| Table 2 PC Barrier Loss Indicators |
|---|
| • Rapid unexplained decrease of PC pressure following an initial increase<br>• Failure of containment isolation valves (LCS Table 1.6.1.3-1) in any one line to close following auto or manual initiation<br>AND<br>downstream pathway outside primary containment exists |

REFERENCE(S):

WNP-2 Technical Specifications

NUMARC NESP-007, Methodology for Development of Emergency Action Levels, Rev. 2, Fission Product Barrier Basis Information for Table 3

WNP-2 Fission Product Barrier Evaluation

WNP-2 Plant Specific EAL Guideline, FC1.1 + RCS1.2 + PC1.1, PC2.1

1 Reactor Fuel 1.1 Coolant Activity

1.1.G.3 General Emergency

NUMARC IC: A loss of any two fission product barriers and loss or potential loss of the third

APPLICABILITY:

| Operating Conditions | 1 | 2 | 3 | | | |
|---|---|---|---|---|---|---|

EMERGENCY ACTION LEVEL:

Coolant activity GT 300 $\mu$Ci/gm dose equivalent iodine
AND
Any RCS Loss Indicators, Table 1
AND either of the following:
Any PC Loss Indicators, Table 2
OR
Cannot maintain plant parameters within HCTL, SRVTPLL, or PSP

BASES:

This EAL represents loss of the fuel clad barrier (coolant activity GT 300 $\mu$Ci/gm dose equivalent iodine) in combination with any of the Table 1 RCS loss indications and either a potential loss of PC (Cannot maintain plant parameters within HCTL, SRVTPLL, or PSP) or any of the Table 2 PC loss indicators.

Fuel Clad barrier damage is indicated by a coolant activity of 300 $\mu$Ci/gm dose equivalent I-131. This amount of activity is well above that expected for iodine spikes and corresponds to approximately 2-5% fuel clad failure in accordance with assessment performed by the NUMARC EAL task force. This amount of clad failure indicates significant clad heating and, thus, the Fuel Clad barrier is considered lost.

The Heat Capacity Temperature Limit (HCTL) is the highest wetwell temperature at which initiation of RPV depressurization will not result in exceeding the Primary Containment Pressure Limit (PCPL) before the rate of energy transfer to the containment is within the capacity of the containment vent. The HCTL is used to preclude failure of the containment or equipment necessary for safe shutdown by assuring that RPV blowdown does not cause containment pressure to exceed the PCPL. The potential loss occurs when RPV pressure and wetwell temperature cannot be maintained below HCTL.

The SRV Tail Pipe Level Limit (SRVTPLL) is the highest wetwell water level at which opening of an SRV will not result in exceeding the code allowable stresses in the tailpipe, tailpipe supports, quenchers or quencher supports. This level is a function of RPV pressure and the Limit is utilized to preclude SRV system failure and containment failure. The consequences of operating SRVs when wetwell water level exceeds the SRVTPLL may include direct pressurization of the containment from a break in the SRV tail pipe. The resulting primary containment pressurization could cause containment failure.

Entry into the unsafe region of the Pressure Suppression Pressure curve (PPM 5.2.1, "Primary Containment Control", Figure F, PSP) is included as a potential primary containment barrier loss. A rapid depressurization of the RPV (e.g., occurrence of a large break LOCA or initiation of ADS) at wetwell pressures in excess of the PSP may cause either:

- Wetwell pressure responses indicative of a failure in the drywell-to-wetwell boundary, or
- Wetwell pressure increases to or beyond the Primary Containment Pressure Limit (PPM 5.2.1, "Primary Containment Control", Figure B, PCPL).

Refer to Attachment 4.2 for the bases of each of the following referenced barrier loss/potential loss indicators.

| Table 1 RCS Barrier Loss Indicators |
|---|
| • Containment Radiation Monitor CMS-RIS-27E and CMS-RIS-27F reading GT 70 R/hr<br>• RPV level LT -161 in.<br>• Drywell pressure GT 1.68 psig with indications of RCS leakage inside drywell |

| Table 2 PC Barrier Loss Indicators |
|---|
| • Rapid unexplained decrease of PC pressure following an initial increase<br>• Failure of containment isolation valves (LCS Table 1.6.1.3-1) in any one line to close following auto or manual initiation<br>AND<br>downstream pathway outside primary containment exists |

REFERENCE(S):

WNP-2 Technical Specifications

NUMARC NESP-007, Methodology for Development of Emergency Action Levels, Rev. 2, Fission Product Barrier Basis Information for Table 3

WNP-2 Fission Product Barrier Evaluation

WNP-2 Plant Specific EAL Guideline, FC1.1 + (RCS2.1, 3.1, 4.1) + (PC1.1, PC2.1, PC 1.5, PC5.2)

1 Reactor Fuel 1.2 Radiation Monitors

1.2.U.1 Unusual Event

NUMARC IC: SU4 - Fuel Clad Degradation

APPLICABILITY:

| Operating Conditions | 1 | 2 | 3 | | | |
|---|---|---|---|---|---|---|

EMERGENCY ACTION LEVEL:

SJAE CONDSR OUTLET RAD HI-HI alarm (P602)

BASES:

This Initiating Condition is considered to be a potential degradation in the level of safety of the plant and a potential precursor of more serious problems.

SJAE CONDSR OUTLET RAD HI HI monitor and alarm reflects the offgas effluent and, therefore, may be one of the first indicators of degrading fuel conditions. The alarm is confirmed by verification of greater than current alarm setpoint on Recorder OG RIS-612 on Panel P604 or high offgas pre treatment air activity [determined by sample results] greater than limits specified in Technical Specification 3.7.5. The Hi alarm setpoint corresponds to a fraction of the Technical Specification limit thereby alerting the plant of the need to sample prior to exceeding limits.

REFERENCE(S):

WNP-2 Technical Specifications

NUMARC NESP-007, Methodology for Development of Emergency Action Levels, Rev. 2, Unusual Event SU4

Instrument Master Data Sheet(s) for instrument(s) listed in the EAL(s)

WNP-2 Plant Specific EAL Guideline, SU4.2

1 Reactor Fuel 1.2 Radiation Monitors

1.2.A.1 Alert

NUMARC IC: Loss or potential loss of RCS

APPLICABILITY:

| Operating Conditions | 1 | 2 | 3 | | | |
|---|---|---|---|---|---|---|

EMERGENCY ACTION LEVEL:

Containment Radiation Monitor CMS-RIS-27E and CMS-RIS-27F reading GT 70 R/hr

BASES:

This indicator is considered to be a loss of the RCS barrier.

A 70 R/hr reading on CMS-RIS-27E and CMS-RIS-27F is used to indicate a loss of the Reactor Coolant System barrier. This value assumes a 0.1% clad damage and the instantaneous release and dispersal of the reactor coolant noble gas and iodine inventory into the drywell atmosphere. The value of 0.1% clad damage was assumed to be the greatest amount of fuel failure under which power operation could occur.

REFERENCE(S):

NUMARC NESP-007, Methodology for Development of Emergency Action Levels, Rev. 2, Fission Product Barrier Basis Information for Table 3

WNP-2 Fission Product Barrier Evaluation

Engineering Calculation No. NE-02-94-57

WNP-2 Plant Specific EAL Guideline, RCS3.1

1 Reactor Fuel 1.2 Radiation Monitors

1.2.S.1 Site Area Emergency

NUMARC IC: Loss or potential loss of any two fission product barriers

APPLICABILITY:

| Operating Conditions | 1 | 2 | 3 | | | |
|---|---|---|---|---|---|---|

EMERGENCY ACTION LEVEL:

Containment Radiation Monitor CMS-RIS-27E and CMS-RIS-27F reading GT 3,600 R/hr

BASES:

This indicator is considered to be a loss of both the RCS and fuel clad barriers.

A 3,600 R/hr reading on CMS-RIS-27E and CMS-RIS-27F is used to indicate a release of reactor coolant, with elevated activity indicative of fuel damage, into the drywell. Therefore, this condition represents loss of both the fuel clad and RCS barriers. This value assumes an instantaneous release and dispersal of the reactor coolant noble gas and iodine inventory associated with coolant concentration associated with 5% clad failures into the drywell atmosphere. WNP-2 has elected to provide an example dealing with the top end of the 2-5% range discussed in NESP-007. This value assumes an instantaneous release and dispersal of the reactor coolant noble gas and iodine inventory into the drywell atmosphere.

REFERENCE(S):

NUMARC NESP-007, Methodology for Development of Emergency Action Levels, Rev. 2, Fission Product Barrier Basis Information for Table 3

WNP-2 Fission Product Barrier Evaluation

Engineering Calculation No. NE-02-94-57

WNP-2 Plant Specific EAL Guideline, FC3.1 (RCS3.1)

1 Reactor Fuel 1.2 Radiation Monitors

1.2.G.1 General Emergency

NUMARC IC: A loss of any two fission product barriers and loss or potential loss of the third

APPLICABILITY:

| Operating Conditions | 1 | 2 | 3 | | | |
|---|---|---|---|---|---|---|

EMERGENCY ACTION LEVEL:

Containment Radiation Monitor CMS-RIS-27E and CMS-RIS-27F reading GT 14,000 R/hr

BASES:

This indicator is considered to be a loss of both the RCS and fuel clad barriers with the potential loss of PC.

A 14,000 R/hr reading on CMS-RIS-27E and CMS-RIS-27F is used to indicate potential failure of the primary containment barrier. It is a value that indicates significant fuel damage well in excess of that associated with the loss of both Fuel Clad and RCS barriers. A major release of radioactivity requiring offsite protective actions is not possible unless a major failure of fuel cladding allows radioactive material to be released from the core into the reactor coolant. Regardless of whether containment is challenged, this amount of activity in containment, if released, could have such severe consequences that it is prudent to treat this as a potential loss of containment, such that a General Emergency declaration is warranted. This level of activity is indicative of approximately 20% clad failure. This value assumes an instantaneous release and dispersal of the reactor coolant noble gas and iodine inventory into the drywell atmosphere.

REFERENCE(S):

NUMARC NESP-007, Methodology for Development of Emergency Action Levels, Rev. 2, Fission Product Barrier Basis Information for Table 3

WNP-2 Fission Product Barrier Evaluation

Engineering Calculation No. NE-02-94-57

WNP-2 Plant Specific EAL Guideline, PC3.1 (FC3.1, RCS3.1)

1.2.G.2 General Emergency

NUMARC IC: A loss of any two fission product barriers and loss or potential loss of the third

APPLICABILITY:

| Operating Conditions | 1 | 2 | 3 | | | |
|---|---|---|---|---|---|---|

EMERGENCY ACTION LEVEL:

Containment Radiation Monitor CMS-RIS-27E and CMS-RIS-27F reading GT 3,600 R/hr
AND ANY of following:

- Cannot maintain plant parameters within HCTL, SRVTPLL, or PSP
- Drywell pressure response not consistent with LOCA conditions
- Any PC Loss Indicators, Table 2

BASES:

This combination of conditions is considered to be a loss of both the RCS and fuel clad barriers with the loss or potential loss of PC.

A 3,600 R/hr reading on CMS-RIS-27E and CMS-RIS-27F is used to indicate a release of reactor coolant, with elevated activity indicative of fuel damage, into the drywell. Therefore, this condition represents loss of both the fuel clad and RCS barriers. This value assumes an instantaneous release and dispersal of the reactor coolant noble gas and iodine inventory associated with coolant concentration associated with 5% clad failures into the drywell atmosphere. WNP-2 has elected to provide an example dealing with the top end of the 2-5% range discussed in NESP-007. This value assumes an instantaneous release and dispersal of the reactor coolant noble gas and iodine inventory into the drywell atmosphere.

The Heat Capacity Temperature Limit (HCTL) is the highest wetwell temperature at which initiation of RPV depressurization will not result in exceeding the Primary Containment Pressure Limit (PCPL) before the rate of energy transfer to the containment is within the capacity of the containment vent. The HCTL is used to preclude failure of the containment or equipment necessary for safe shutdown by assuring that RPV blowdown does not cause containment pressure to exceed the PCPL. The potential loss occurs when RPV pressure and wetwell temperature cannot be maintained below HCTL.

The SRV Tail Pipe Level Limit (SRVTPLL) is the highest wetwell water level at which opening of an SRV will not result in exceeding the code allowable stresses in the tailpipe, tailpipe supports, quenchers or quencher supports. This level is a function of RPV pressure and the Limit is utilized to preclude SRV system failure and containment failure. The consequences of operating SRVs when wetwell water level exceeds the SRVTPLL may include direct pressurization of the containment from a break in the SRV tail pipe. The resulting primary containment pressurization could cause containment failure.

Entry into the unsafe region of the Pressure Suppression Pressure curve (PPM 5.2.1, "Primary Containment Control", Figure F, PSP) is included as a potential primary containment barrier loss. A rapid depressurization of the RPV (e.g., occurrence of a large break LOCA or initiation of ADS) at wetwell pressures in excess of the PSP may cause either:

- Wetwell pressure responses indicative of a failure in the drywell-to-wetwell boundary, or
- Wetwell pressure increases to or beyond the Primary Containment Pressure Limit (PPM 5.2.1, "Primary Containment Control", Figure B, PCPL).

Containment or drywell pressure responses not consistent with LOCA conditions indicate a loss of the Primary Containment barrier. This may be noticed as a decrease in drywell pressure when no operation action (e.g., starting drywell cooling fans) has been taken. It would also include a failure of the drywell pressure to increase as expected during a LOCA.

Refer to Attachment 4.2 for the bases of each of the following referenced PC barrier loss indicators.

| Table 2 PC Barrier Loss Indicators |
|---|
| • Rapid unexplained decrease of PC pressure following an initial increase<br>• Failure of containment isolation valves (LCS Table 1.6.1.3-1) in any one line to close following auto or manual initiation<br>AND<br>downstream pathway outside primary containment exists |

REFERENCE(S):

NUMARC NESP-007, Methodology for Development of Emergency Action Levels, Rev. 2, Fission Product Barrier Basis Information for Table 3

WNP-2 Fission Product Barrier Evaluation

Engineering Calculation No. NE-02-94-57

WNP-2 Plant Specific EAL Guideline, FC3.1 + PC1.5, PC5.2, PC1.1, PC1.2, PC2.1

1.3.U.1 Unusual Event

NUMARC IC: AU2 - Unexpected decrease in water covering irradiated fuel assemblies

APPLICABILITY:

| Operating Conditions | 1 | 2 | 3 | 4 | 5 | def |
|---|---|---|---|---|---|---|

EMERGENCY ACTION LEVEL:

Uncontrolled water level decrease in the reactor cavity or SFP below the level of the weirs with all irradiated fuel assemblies remaining covered by water

BASES:

The SFP cooling system weirs were chosen as a readily identifiable level. In addition to being readily visible from the refueling floor, dropping below the level of the weir, only a few inches, impairs the operability of the SFP cooling system with subsequent alarms.

These events tend to have long lead times relative to potential for radiological release outside the site boundary thus, the impact to public health and safety is very low.

Uncontrolled water level decrease may result in unplanned increases in in plant radiation levels represent a degradation in the control of radioactive material and represent a potential degradation in the level of safety of the plant. This EAL escalates to an ALERT per EAL 1.3.A.2 if the water level drops lower to the level of the gates.

REFERENCE(S):

WNP-2 Technical Specifications

NUMARC NESP-007, Methodology for Development of Emergency Action Levels, Rev. 2, Unusual Event AU2

WNP-2 Plant Specific EAL Guideline, AU2.1, AU2.2

1.3.A.1 Alert

NUMARC IC: AA2 - Major damage to irradiated fuel or loss of water level that has resulted or will result in the uncovering of irradiated fuel outside the RPV

APPLICABILITY:

| Operating Conditions | 1 | 2 | 3 | 4 | 5 | def |
|---|---|---|---|---|---|---|

EMERGENCY ACTION LEVEL:

HIGH alarm on ARM-RIS-1 (Fuel Pool ARM) resulting from an uncontrolled irradiated fuel handling process

BASES:

Due to the decreased amount of decay heat present, there is time available to take corrective actions and little potential for substantial fuel damage. In addition, NUREG/CR-4982, "Severe Accident in Spent Fuel Pools in Support of Generic Safety Issue 82," July 1987, indicates that even if corrective actions are not taken, no prompt fatalities are predicted, and that risk of injury is low.

The setpoint for the listed ARM is given in PPM 4.602.A5 1-1. After review of refuel floor radiation monitoring capability it was determined that three of the four ARMs included in this EAL should not be listed for the following reasons.

ARM-RIS-3 and ARM-RIS-3A detect radiation near the bottom of the new fuel storage pit and, therefore, would not provide adequate indication of radiation levels associated with decreasing water level above irradiated fuel.

ARM-RIS-2, Fuel Pool Area Radiation Monitor, alarm setpoint is arbitrarily adjusted to a level slightly above normal background to monitor operator performance during fuel handling and would, therefore, not be indicative of a potential refueling accident. Its high alarm setpoint is typically 15 mrem/hr.

The high alarm on ARM-RIS-1, Fuel Pool Area Radiation Monitor, is the threshold condition for this EAL. Its setpoint is nominally 300 mrem/hr. The EAL is worded so that the alarm must be the result of an uncontrolled irradiated fuel handling process avoiding an unnecessary declaration if the condition were caused by a spurious alarm signal or condition not related to fuel handling.

REFERENCE(S):

WNP-2 Technical Specifications

NUMARC NESP-007, Methodology for Development of Emergency Action Levels, Rev. 2, AA2

NUREG/CR-4982, Severe Accident in Spent Fuel Pools in Support of Generic Safety, Issue 82, July 1987

WNP-2 Plant Specific EAL Guideline, AA2.1

1.3.A.2 Alert

NUMARC IC: AA2 - Loss of water level that has or will result in the uncovering of irradiated fuel outside the reactor vessel.

APPLICABILITY:

| Operating Conditions | 1 | 2 | 3 | 4 | 5 | def |
|---|---|---|---|---|---|---|

EMERGENCY ACTION LEVEL:

Water level, when not intentionally lowered, observed to be below the top of the gate sill separating the reactor cavity and the SFP

BASES:

Unintentional water level decrease may result in unplanned increases in in plant radiation levels which represent a degradation in the control of radioactive material and represent a potential degradation in the level of safety of the plant.

No level indication is available in Reactor Cavity or spent fuel pools for monitoring pool level outside of a narrow band around the normal operating range. In lieu of using a visual observation of pool level below top of fuel racks, the bottom of the water gates between the pools were chosen as a reference point for classification purposes. The intent of this EAL is to allow observations from plant personnel to be factored into the declaration and is not intended to direct an entry into an area solely to observe pool level.

REFERENCE(S):

WNP-2 Technical Specifications

NUMARC NESP-007, Methodology for Development of Emergency Action Levels, Rev. 2, AA2

NUREG 0818, Emergency Action Levels for Light Water Reactors

NUREG/CR-4982, Severe Accident in Spent Fuel Pools in Support of Generic Safety, Issue 82, July 1987

WNP-2 Plant Specific EAL Guideline, AA2.4

1.3.A.3 Alert

NUMARC IC: AA2 - Loss of water level that has or will result in the uncovering of irradiated fuel outside the reactor vessel.

APPLICABILITY:

| Operating Conditions | 1 | 2 | 3 | 4 | 5 | def |
|---|---|---|---|---|---|---|

EMERGENCY ACTION LEVEL:

Report of visual observation of irradiated fuel uncovered or uncovering imminent

BASES:

Unintentional water level decrease may result in unplanned increases in in plant radiation levels which represent a degradation in the control of radioactive material and represent a potential degradation in the level of safety of the plant.

No level indication is available in Reactor Cavity or spent fuel pools for monitoring pool level outside of a narrow band around the normal operating range. The intent of this EAL is to allow observations from plant personnel to be factored into the declaration and is not intended to direct an entry into an area solely to observe pool level. The terminology "uncovering imminent" is intended to address conditions in which water level decrease mitigative actions are not being successful.

REFERENCE(S):

WNP-2 Technical Specifications

NUMARC NESP-007, Methodology for Development of Emergency Action Levels, Rev. 2, AA2

NUREG 0818, Emergency Action Levels for Light Water Reactors

NUREG/CR-4982, Severe Accident in Spent Fuel Pools in Support of Generic Safety, Issue 82, July 1987

WNP-2 Plant Specific EAL Guideline, AA2.2

## 2 REACTOR PRESSURE VESSEL (RPV)

The reactor pressure vessel provides a volume for the coolant which covers the reactor core. The RPV and associated pressure piping (reactor coolant system) together provide a barrier to limit the release of radioactive material should the reactor fuel cladding integrity fail.

There are two RPV parameters which are indicative of conditions which may pose a threat to RPV or fuel cladding integrity:

- RPV Water Level: RPV water level is directly related to the status of adequate core cooling, and therefore fuel cladding integrity. Excessive reactor coolant to drywell leakage indications are utilized to indicate potential pipe cracks which may propagate to an extent threatening fuel clad, RPV and primary containment integrity. Conditions under which all attempts at establishing adequate core cooling have failed require primary containment flooding.

- Reactivity Control: The inability to control reactor power below certain levels can pose a direct threat to reactor fuel, RPV and primary containment integrity.

2 RPV 2.1 RPV Water Level

2.1.U.1 Unusual Event

NUMARC IC: SU5 - RCS Leakage

APPLICABILITY:

| Operating Conditions | 1 | 2 | 3 | | | |
|---|---|---|---|---|---|---|

EMERGENCY ACTION LEVEL:

Valid unidentified leakage GE 10 gpm or upscale high indicated on recorder EDR-FRS-623, Pen 1 (P632) (non-RCC)
OR
Valid identified leakage GE 25 gpm indicated on recorder EDR-FRS-623, Pen 2 (P632)

BASES:

This Initiating Condition may be a precursor of more serious conditions and, as a result, is considered to be a potential degradation in the level of safety of the plant. The value for identified leakage is set at a higher value due to the lesser significance of identified leakage in comparison to unidentified and pressure boundary leakage. RCC is not considered part of RCS leakage for this EAL.

REFERENCE(S):

WNP-2 Technical Specifications

NUMARC NESP-007, Methodology for Development of Emergency Action Levels, Rev. 2, Unusual Event SU5

WNP-2 Plant Specific EAL Guideline, SU5.1

2 RPV 2.1 RPV Water Level

2.1.A.1 Alert

NUMARC IC: Loss or potential loss of RCS

APPLICABILITY:

| Operating Conditions | 1 | 2 | 3 | | | |
|---|---|---|---|---|---|---|

EMERGENCY ACTION LEVEL:

Total RCS leakage GT 30 gpm inside PC or EDR-FRS-623, Pen 2 upscale high

BASES:

Total leakage is considered to be the total of both identified and unidentified leakage as measured on EDR-FRS-623 pen 1 (unidentified - Floor Drain Sump Fill Rate) and pen 2 (identified - Equipment Drain Sump Fill Rate). The maximum measurable identified leak rate (pen 2) in the Control Room at WNP-2 is 30 gpm, therefore 30 gpm is used instead of the 50 gpm limit recommended by NUMARC.

REFERENCE(S):

NUMARC NESP-007, Methodology for Development of Emergency Action Levels, Rev. 2, Fission Product Barrier Basis Information for Table 3

WNP-2 Fission Product Barrier Evaluation

WNP-2 Plant Specific EAL Guideline, RCS1.2

2 RPV 2.1 RPV Water Level

2.1.S.1 Site Area Emergency

NUMARC IC: Loss or potential loss of any two fission product barriers

APPLICABILITY:

| Operating Conditions | 1 | 2 | 3 | 4 | 5 | |
|---|---|---|---|---|---|---|

EMERGENCY ACTION LEVEL:

RPV level LT -161 inches or cannot be determined.

BASES:

This EAL represents a loss of RCS barrier and potential loss of fuel clad. Indicating fuel clad barrier potential loss at -161″ (Top of Active Fuel) ensures that an emergency is declared before fuel perforation occurs. A level decrease to below -161″ is also indicative of a large RCS break, or a smaller break with loss of high pressure makeup. This also represents conditions where RPV level cannot be determined, such as entry into PPM 5.1.4, RPV Flooding.

REFERENCE(S):

NUMARC NESP-007, Methodology for Development of Emergency Action Levels, Rev. 2, Fission Product Barrier Basis Information for Table 3

WNP-2 Fission Product Barrier Evaluation

WNP-2 Plant Specific EAL Guideline, SS5.1, FC2.2/RCS4.1

2 RPV 2.1 RPV Water Level

2.1.G.1 General Emergency

NUMARC IC: A loss of any two fission product barriers and loss or potential loss of the third

APPLICABILITY:

| Operating Conditions | 1 | 2 | 3 | | | |
|---|---|---|---|---|---|---|

EMERGENCY ACTION LEVEL:

Entry into Severe Accident Guidelines

BASES:

This EAL represents loss of both fuel clad and RCS in conjunction with a potential loss of containment.

Entry into Severe Accident Guidelines is indicative of both a loss of fuel clad and RCS barriers because:

1) RPV water level cannot be restored and maintained above -161 inches, or

2) For ATWS conditions, RPV water level cannot be maintained above -192", or

3) If RPV water level cannot be determined, RPV flooding for ATWS or non-ATWS conditions cannot be established or maintained.

Entry into PPM 5.1.7, "PC Flooding" is indicative of a potential loss of primary containment because actions to flood the containment may jeopardize the pressure suppression capability of the containment or result in the need to vent the RPV or primary containment.

REFERENCE(S):

NUMARC NESP-007, Methodology for Development of Emergency Action Levels, Rev. 2, Fission Product Barrier Basis Information for Table 3

WNP-2 Fission Product Barrier Evaluation

WNP-2 Plant Specific EAL Guideline, FC2.1/PC4.1

2 RPV 2.1 RPV Water Level

2.1.G.2 General Emergency

NUMARC IC: A loss of any two fission product barriers and loss or potential loss of the third

APPLICABILITY:

| Operating Conditions | 1 | 2 | 3 | | | |
|---|---|---|---|---|---|---|

EMERGENCY ACTION LEVEL:

RPV level LT -161 inches or cannot be determined
AND ANY of following:

- Rapid unexplained decrease of PC pressure following an initial increase
- Drywell pressure response not consistent with LOCA conditions
- Failure of containment isolation valves (LCS Table 1.6.1.3-1) in any one line to close following auto or manual initiation AND downstream pathway outside primary containment exists

BASES:

This EAL represents loss of both RCS and PC in conjunction with a potential loss of fuel clad.

Indicating fuel clad barrier potential Loss at -161" (Top of Active Fuel) ensures that an emergency is declared before fuel perforation occurs. An unintentional level decrease to below -161" is also indicative of a large RCS break, or a smaller break with loss of high pressure makeup.

Rapid unexplained loss of pressure (i.e., not attributable to drywell spray or condensation effects) following initial pressure increase indicates a loss of containment integrity. In interpreting this EAL, an initial increase is any PC pressure increase above 1.68 psig. A rapid decrease should be considered any decrease which occurs faster than the initial increase.

Containment or drywell pressure responses not consistent with LOCA conditions indicate a loss of the Primary Containment barrier. This may be noticed as a decrease in drywell pressure when no operation action (e.g., starting drywell cooling fans) has been taken. It would also include a failure of the drywell pressure to increase as expected during a LOCA.

The failure to isolate condition is intended to cover containment isolation failures allowing a direct flow path to the environment such as a failure of MSIVs to close with open valves downstream to the turbine or condenser. Downstream path outside primary containment does not mean leakage incident to normal system integrity. Only those penetrations required to isolate per Technical Specifications should be considered.

REFERENCE(S):

NUMARC NESP-007, Methodology for Development of Emergency Action Levels, Rev. 2, Fission Product Barrier Basis Information for Table 3

WNP-2 Fission Product Barrier Evaluation

WNP-2 Plant Specific EAL Guideline, FC2.2/RCS4.1 + PC1.1, PC1.2, PC2.1

2 RPV 2.2 Reactivity Control

2.2.U.1 Unusual Event

NUMARC IC: SU8 - Inadvertent Criticality. An extended and unplanned positive period or sustained positive period observed on nuclear instrumentation while not performing a reactor startup.

APPLICABILITY:

| Operating Conditions | | 2 | 3 | 4 | 5 | |
|---|---|---|---|---|---|---|

EMERGENCY ACTION LEVEL:

An extended and unplanned sustained positive period observed on NIs while NOT performing a reactor startup.

BASES:

Inadvertent criticalities indicate a potential degradation of the level of safety of the plant. This EAL excludes inadvertent criticalities that occur during planned reactivity changes associated with reactor startups, such as achieving criticality earlier than estimated.

The term extended is used in order to allow exclusion of expected short term positive periods from planned fuel bundle or control rod movement during core alterations.

REFERENCE(S):

NUMARC NESP-007, Methodology for Development of Emergency Action Levels, final draft rev 3, Unusual Event SU8.

2 RPV 2.2 Reactivity Control

2.2.A.1 Alert

NUMARC IC: SA2 - Failure of Reactor Protection System (RPS) instrumentation to complete or initiate a reactor scram AND manual scram was successful.

APPLICABILITY:

| Operating Conditions | 1 | 2 | | | | |
|---|---|---|---|---|---|---|

EMERGENCY ACTION LEVEL:

Any RPS setpoint (including manual) has been exceeded per T.S. 3.3.1.1
AND
RPS actuation failed to result in a control rod pattern which alone always assures reactor shutdown under all conditions
AND
Manual actions (mode switch in shutdown, manual push buttons, and ARI) result in reactor power LE 5%.

BASES:

This condition indicates a failure of the automatic protection system to scram the reactor sufficient to achieve shutdown under all conditions without boron but the reactor was successfully manually scrammed sufficient to achieve shutdown under all conditions without boron.

A manual scram is any set of actions by the reactor operator(s) which results in a scram. These actions include placing the reactor mode switch in shutdown, depressing the RPS Manual Scram push buttons and/or placing ARI switches to trip.

Failure of a manual scram to reduce reactor power below APRM downscale levels or resulting in exceeding 110 degrees F in the suppression pool would escalate this event to Site Area Emergency 2.2.S.1.

REFERENCE(S):

WNP-2 Technical Specifications

NUMARC NESP-007, Methodology for Development of Emergency Action Levels, Rev. 2, Alert SA2

WNP-2 Emergency Operating Procedure Flowchart Training Manual, PPM 5.0.10

WNP-2 Plant Specific EAL Guideline, SA2.1

2 RPV 2.2 Reactivity Control

2.2.S.1 Site Area Emergency

NUMARC IC: SS2 - Failure of RPS instrumentation to complete or initiate an automatic reactor scram once a RPS setpoint has been exceeded AND manual scram was NOT successful.

APPLICABILITY:

| Operating Conditions | 1 | 2 | | | | |
|---|---|---|---|---|---|---|

EMERGENCY ACTION LEVEL:

Any RPS setpoint (including manual) has been exceeded per T.S. 3.3.1.1
AND
RPS actuation failed to result in a control rod pattern which alone always assures reactor shutdown under all conditions
AND either:
Reactor power GT 5% or unknown
OR
Wetwell temperature GT 110 °F

BASES:

This condition indicates a failure of both the automatic protection system and manual efforts to scram the reactor with continued power generation.

A manual scram is any set of actions by the reactor operator(s) which results in a scram. These actions include placing the reactor mode switch in shutdown, depressing the RPS Manual Scram push buttons and/or placing ARI switches to trip. Injection of boron is not considered in reducing reactor power below 5%. A concurrent challenge to the ability to cool the core or a significant challenge to decay heat removal capability would escalate this event to General Emergency 2.2.G.1.

As specified in the NUMARC/NESP-007 Questions and Answers, January 1993, ". . . a scram is considered unsuccessful if it does not result in achieving a state in which the reactor will remain shutdown under all conditions without boron injection." For 2.2.A.1, if manual actions result in the reactor being shutdown under all conditions without boron injection, an ALERT is declared. Escalation to a Site Area Emergency (2.2.S.1) is not required. If sufficient control rods are not inserted to reduce reactor power to below the APRM downscale setpoints, an immediate Site Area Emergency (2.2.S.1) is declared. If the APRM downscale setpoint is achieved, but suppression pool temperature is greater than Boron Injection Initiation Temperature (110°F), a precursor exists for a threat to containment and thus a "Site Area Emergency is warranted."

APRM downscale trip setpoint for WNP-2 is 5%, the Boron Injection Initiation Temperature is defined as 110°F. The conditions ". . . control rod pattern which alone always assures reactor shutdown" is defined to mean that the reactor is shutdown under all conditions without boron.

REFERENCE(S):

WNP-2 Emergency Operating Procedure RPV Control-ATWS, PPM 5.1.2

WNP-2 Technical Specifications

NUMARC NESP-007, Methodology for Development of Emergency Action Levels, Rev. 2, Site General Emergency SS2

WNP-2 Plant Specific EAL Guideline, SS2.1

2 RPV 2.2 Reactivity Control

2.2.G.1 General Emergency

NUMARC IC: SG2 - Failure of the RPS to complete an automatic scram AND manual scram was NOT successful AND there is indication of an extreme challenge to the ability to cool the core.

APPLICABILITY:

| Operating Conditions | 1 | 2 | | | | |
|---|---|---|---|---|---|---|

EMERGENCY ACTION LEVEL:

Any RPS setpoint (including manual) has been exceeded per T.S. 3.3.1.1
AND
RPS actuation failed to result in a control rod pattern which alone always assures reactor shutdown under all conditions
AND
Wetwell temperature cannot be maintained LT the HCTL

BASES:

This condition indicates a failure of both the automatic protection system and manual efforts at Control Room Panel P-603 to scram the reactor concurrent with a challenge to the ability to cool the core or a significant challenge to decay heat removal capability.

Heat removal capability is extremely challenged if the wetwell temperature cannot be maintained below the Heat Capacity Temperature Limit curve.

A manual scram is any set of actions by the reactor operator(s) which results in a scram. These actions include placing the reactor mode switch in shutdown, depressing the RPS Manual Scram push buttons and/or placing ARI switches to trip. Injection of boron is not considered in reducing reactor power below 5%.

REFERENCE(S):

WNP-2 Emergency Operating Procedure RPV Control-ATWS, PPM 5.1.2

WNP-2 Emergency Operating Procedure Primary Containment Flooding, PPM 5.1.7

WNP-2 Technical Specifications

NUMARC NESP-007, Methodology for Development of Emergency Action Levels, Rev. 2, General Emergency SG2

WNP-2 Plant Specific EAL Guideline, SG2.1

## 3 PRIMARY CONTAINMENT (PC)

The primary containment structure is a pressure suppression system. It forms a fission product barrier designed to limit the release of radioactive fission products generated from any postulated accident so as to preclude exceeding offsite exposure limits.

The primary containment structure is a low leakage pressure suppression system housing the reactor pressure vessel (RPV), the reactor coolant recirculation piping and other branch connections of the reactor primary system. The primary containment is equipped with isolation valves for most systems which penetrate the containment boundary. These valves automatically actuate to isolate systems under emergency conditions.

There are four primary containment parameters which are indicative of conditions which may pose a threat to primary containment integrity or indicate degradation of RPV or reactor fuel integrity.

- Primary Containment Pressure: Excessive primary containment pressure is also indicative of either primary system leaks into containment or loss of containment cooling function. Primary containment pressures at or above specified limits pose a direct threat to primary containment integrity and the pressure suppression function.

- Wetwell Temperature/Level: Excessive suppression pool water temperatures or abnormally high or low wetwell levels can result in a loss of the pressure suppression capability of containment and thus be indicative of severely degraded RPV and containment conditions.

- Combustible Gas Concentration: The existence of combustible gas concentrations in containment pose a severe threat to containment integrity and are indicative of severely degraded reactor core and RPV conditions.

- Containment Isolation Status: The existence of an unisolable steam line break outside containment constitutes a loss of containment integrity as well as a loss of RCS boundary. Should a loss of fuel cladding integrity occur, the potential for release of large amounts of radioactive materials to the environment exists.

3 Primary Containment 3.1 Primary Containment Pressure

3.1.U.1 Unusual Event

NUMARC IC: Loss or potential loss of primary containment

APPLICABILITY:

| Operating Conditions | 1 | 2 | 3 | | | |
|---|---|---|---|---|---|---|

EMERGENCY ACTION LEVEL:

Rapid unexplained decrease of PC pressure following an initial increase

BASES:

This indicator is considered to be a loss of the PC barrier.

Rapid unexplained loss of pressure (i.e., not attributable to drywell spray or condensation effects) following initial pressure increase indicates a loss of containment integrity. In interpreting this EAL, an initial increase is any PC pressure increase above 1.68 psig. A rapid decrease should be considered any decrease which occurs faster than the initial increase.

REFERENCE(S):

NUMARC NESP-007, Methodology for Development of Emergency Action Levels, Rev. 2, Fission Product Barrier Basis Information for Table 3

WNP-2 Fission Product Barrier Evaluation

WNP-2 Plant Specific EAL Guideline, PC1.1

3 Primary Containment 3.1 Primary Containment Pressure

3.1.A.1 Alert

NUMARC IC: Loss or potential loss of either fuel clad or RCS

APPLICABILITY:

| Operating Conditions | 1 | 2 | 3 | | | |
|---|---|---|---|---|---|---|

EMERGENCY ACTION LEVEL:

Drywell pressure GT 1.68 psig with indications of RCS leakage inside drywell

BASES:

This indicator is considered to be a loss of the RCS barrier.

The 1.68 psig drywell pressure for the Reactor Coolant System barrier loss is based on the drywell pressure scram and isolation setpoint and indicates a Loss of Coolant Accident (LOCA). A potential loss of the Reactor Coolant System barrier would not result in an increasing drywell pressure and, therefore, no indicator is provided. The qualifier of "with indications of RCS leak inside drywell" is included as an indicator of RCS boundary degradation and eliminates a drywell pressure increase due to a loss of drywell ventilation.

REFERENCE(S):

NUMARC NESP-007, Methodology for Development of Emergency Action Levels, Rev. 2, Fission Product Barrier Basis Information for Table 3

WNP-2 Fission Product Barrier Evaluation

WNP-2 Plant Specific EAL Guideline, RCS2.1

3 Primary Containment 3.1 Primary Containment Pressure

3.1.S.1 Site Area Emergency

NUMARC IC: Loss or potential loss of any two fission product barriers

APPLICABILITY:

| Operating Conditions | 1 | 2 | 3 | | | |
|---|---|---|---|---|---|---|

EMERGENCY ACTION LEVEL:

Drywell pressure response not consistent with LOCA conditions

BASES:

This indicator is considered to be a loss of both the RCS and PC barriers.

Containment or drywell pressure responses not consistent with LOCA conditions indicate a loss of the Primary Containment barrier. This may be noticed as a decrease in drywell pressure when no operation action (e.g., starting drywell cooling fans) has been taken. It would also include a failure of the drywell pressure to increase as expected during a LOCA. Also, a loss of suppression function in conjunction with a LOCA would indicate a loss of the Primary Containment barrier. Exceeding PSP is an indication of loss of pressure suppression function.

REFERENCE(S):

NUMARC NESP-007, Methodology for Development of Emergency Action Levels, Rev. 2, Fission Product Barrier Basis Information for Table 3

WNP-2 Fission Product Barrier Evaluation

WNP-2 Plant Specific EAL Guideline, PC2.1

3.1.S.2 Site Area Emergency

NUMARC IC: Loss or potential loss of either fuel clad or RCS barrier in conjunction with a loss of containment

APPLICABILITY:

| Operating Conditions | 1 | 2 | 3 | | | |
|---|---|---|---|---|---|---|

EMERGENCY ACTION LEVEL:

Rapid unexplained decrease of PC pressure following an initial increase
AND ANY of the following:

- Total RCS leakage GT 30 gpm inside PC or EDR-FRS-623, Pen 2 upscale high
- Containment Radiation Monitor CMS-RIS-27E and CMS-RIS-27F reading GT 70 R/hr
- Drywell pressure GT 1.68 psig with indications of RCS leakage inside drywell

BASES:

This indicator is considered to be a loss of both the RCS and PC barriers.

Rapid unexplained loss of pressure (i.e., not attributable to drywell spray or condensation effects) following initial pressure increase indicates a loss of containment integrity. In interpreting this EAL, an initial increase is any PC pressure increase above 1.68 psig. A rapid decrease should be considered any decrease which occurs faster than the initial increase.

Total leakage is considered to be the total of both identified and unidentified leakage as measured on EDR-FRS-623 pen 1 (unidentified - Floor Drain Sump Fill Rate) and pen 2 (identified - Equipment Drain Sump Fill Rate). The maximum measurable identified leak rate (pen 2) in the Control Room at WNP-2 is 30 gpm, therefore 30 gpm is used instead of the 50 gpm limit recommended by NUMARC.

A 70 R/hr reading on CMS-RIS-27E and CMS-RIS-27F is used to indicate a loss of the Reactor Coolant System barrier. This value assumes a 0.1% clad damage and the instantaneous release and dispersal of the reactor coolant noble gas and iodine inventory into the drywell atmosphere. The value of 0.1% clad damage was assumed to be the greatest amount of fuel failure under which power operation could occur.

The 1.68 psig drywell pressure for the Reactor Coolant System barrier loss is based on the drywell pressure scram and isolation setpoint and indicates a Loss of Coolant Accident (LOCA). A potential loss of the Reactor Coolant System barrier would not result in an increasing drywell pressure and, therefore, no indicator is provided. The qualifier of "with indications of RCS leak inside drywell" is included as an indicator of RCS boundary degradation and eliminates a drywell pressure increase due to a loss of drywell ventilation.

REFERENCE(S):

NUMARC NESP-007, Methodology for Development of Emergency Action Levels, Rev. 2, Fission Product Barrier Basis Information for Table 3

WNP-2 Fission Product Barrier Evaluation

WNP-2 Plant Specific EAL Guideline, PC1.1 + RCS1.2, RCS3.1, RCS2.1

3 Primary Containment 3.1 Primary Containment Pressure

3.1.G.1 General Emergency

NUMARC IC: A loss of any two fission product barriers and loss or potential loss of the third

APPLICABILITY:

| Operating Conditions | 1 | 2 | 3 | | | |
|---|---|---|---|---|---|---|

EMERGENCY ACTION LEVEL:

PC pressure exceeds PCPL

BASES:

This indicator is considered to be a loss of both the Fuel Clad and RCS barriers in conjunction with the potential loss of PC.

Containment pressures that exceeds 34.7 psig, the maximum expected pressure following a LOCA, have the potential to result in a loss of the containment barrier. Preparations to vent containment are required by PPM 5.2.1, "Primary Containment Control" before the Wetwell pressure reaches the Primary Containment Pressure Limit (PCPL). Therefore this condition is considered a potential loss of containment.

With PC pressure GT PCPL and increasing, a loss of the RCS barrier has occurred due to the elevated containment pressure. Continued wetwell pressure increase could result in complete and uncontrolled loss of the primary containment due to containment failure. With no assurance as to where the containment may fail, an attendant loss of the suppression pool should be assumed with a consequent complete and unrecoverable loss of core cooling whereby the degraded core condition and loss of containment integrity releases substantial amounts of radioactivity to the general environment. Therefore, this condition is also considered to be a loss of both fuel clad and RCS.

REFERENCE(S):

NUMARC NESP-007, Methodology for Development of Emergency Action Levels, Rev. 2, Fission Product Barrier Basis Information for Table 3

WNP-2 Fission Product Barrier Evaluation

WNP-2 Plant Specific EAL Guideline, PC1.3
3 Primary Containment 3.2 Wetwell Temperature/Level

3.2.U.1 Unusual Event

NUMARC IC: Loss or potential loss of primary containment

APPLICABILITY:

| Operating Conditions | 1 | 2 | 3 | | | |
|---|---|---|---|---|---|---|

EMERGENCY ACTION LEVEL:

Cannot maintain plant parameters within SRVTPLL

BASES:

This indicator is considered to be a potential loss of the PC barrier.

The SRV Tail Pipe Level Limit (SRVTPLL) is the highest wetwell water level at which opening of an SRV will not result in exceeding the code allowable stresses in the tailpipe, tailpipe supports, quenchers or quencher supports. This level is a function of RPV pressure and the Limit is utilized to preclude SRV system failure and containment failure. The consequences of operating SRVs when wetwell water level exceeds the SRVTPLL may include direct pressurization of the containment from a break in the SRV tail pipe. The resulting primary containment pressurization could cause containment failure.

REFERENCE(S):

NUMARC NESP-007, Methodology for Development of Emergency Action Levels, Rev. 2, Fission Product Barrier Basis Information for Table 3

WNP-2 Fission Product Barrier Evaluation

WNP-2 Plant Specific EAL Guideline, PC1.5

3.2.S.1 Site Area Emergency

NUMARC IC: Loss or potential loss of any two fission product barriers

SS4 - Complete loss of functions needed to achieve and maintain hot shutdown.

APPLICABILITY:

| Operating Conditions | 1 | 2 | 3 | | | |
|---|---|---|---|---|---|---|

EMERGENCY ACTION LEVEL:

RPV pressure and wetwell temperature cannot be maintained below HCTL

BASES:

This indicator is considered to be a loss of the RCS in conjunction with a potential loss of the PC barrier. This condition also is representative of a loss of ability to maintain the plant in hot shutdown.

This EAL addresses complete loss of functions, including ultimate heat sink and reactivity control, required for hot shutdown with the reactor at pressure and temperature. Under these conditions, there is an actual major failure of a system intended for protection of the public. Thus, declaration of a Site Area Emergency is warranted. Escalation to a General Emergency would occur by Abnormal Rad Levels/Radiological Effluent, Fission Product Barrier Degradation, or Emergency Director Judgment Initiating Conditions.

Functions required for hot shutdown consist of the ability to achieve reactor shutdown and to discharge decay heat energy from the reactor to the ultimate heat sink. Appropriate emergency declarations required by the inability to achieve reactor shutdown are addressed by EALs 2.2.A.1, 2.2.S.1 and 2.2.G.1. Inability to remove decay heat energy is reflected in an increase in suppression pool temperature. Elevated suppression pool temperature is addressed by the Heat Capacity Temperature Limit (HCTL). The HCTL is a function of RPV pressure and suppression pool temperature. If RPV pressure and suppression pool temperature cannot be maintained below the HCTL, the ultimate heat sink is threatened and declaration of a Site Area Emergency is warranted.

The Heat Capacity Temperature Limit (HCTL) is the highest wetwell temperature at which initiation of RPV depressurization will not result in exceeding the Primary Containment Pressure Limit (PCPL) before the rate of energy transfer to the containment is within the capacity of the containment vent. The HCTL is used to preclude failure of the containment or equipment necessary for safe shutdown by assuring that RPV blowdown does not cause containment pressure to exceed the PCPL. The potential loss occurs when RPV pressure and wetwell temperature cannot be maintained below HCTL.

This indicator is also considered to be a loss of RCS barrier in that a wetwell temperature rise sufficient to exceed the HCTL could only be the result of a sustained discharge of a primary system into the wetwell.

REFERENCE(S):

NUMARC NESP-007, Methodology for Development of Emergency Action Levels, Rev. 2, Fission Product Barrier Basis Information for Table 3

WNP-2 Fission Product Barrier Evaluation

NUMARC NESP-007, Methodology for Development of Emergency Action Levels, Rev. 2, Site Area Emergency, SS4

WNP-2 Plant Specific EAL Guideline, SS4.1

3 Primary Containment 3.2 Wetwell Temperature/Level

3.2.S.2 Site Area Emergency

NUMARC IC: Loss or potential loss of any two fission product barriers

APPLICABILITY:

| Operating Conditions | 1 | 2 | 3 | | | |
|---|---|---|---|---|---|---|

EMERGENCY ACTION LEVEL:

Cannot maintain plant parameters within SRVTPLL, or PSP
AND ANY of the following:

- Total RCS leakage GT 30 GPM inside PC or EDR-FRS-623, Pen 2 upscale high
- Containment Radiation Monitor CMS-RIS-27E and CMS-RIS-27F reading GT 70 R/hr
- Drywell pressure GT 1.68 psig with indications of RCS leakage inside drywell

BASES:

This indicator is considered to be a potential loss of PC in combination with a loss or potential loss of RCS barrier.

The inability to maintain plant parameters within the SRVTPLL, or PSP represents a potential loss of PC.

The SRV Tail Pipe Level Limit (SRVTPLL) is the highest wetwell water level at which the opening of an SRV will not result in exceeding the code allowable stresses in the tailpipe, tailpipe supports, quenchers or quencher supports. This level is a function of RPV pressure and the Limit is utilized to preclude SRV system failure and containment failure. The consequences of operating SRVs when wetwell water level exceeds SRVTPLL may include direct pressurization of the containment from a break in the SRV tailpipe. The resulting primary containment pressurization could cause containment failure.

Entry into the unsafe region of the Pressure Suppression Pressure curve (PPM 5.2.1, "Primary Containment Control", Figure F, PSP) is included as a potential primary containment barrier loss. A rapid depressurization of the RPV (e.g., occurrence of a large break LOCA or initiation of ADS) at wetwell pressures in excess of the PSP may cause either:

- Wetwell pressure responses indicative of failure in the drywell-to-wetwell boundary, or
- Wetwell pressure increases to or beyond the Primary Containment Pressure Limit (PPM 5.2.1, "Primary Containment Control", Figure B, PCPL).

Total leakage is considered to be the total of both identified and unidentified leakage as measured on EDR-FRS-623, Pen 1 (unidentified Floor Drain Sump Fill Rate) and Pen 2 (identified Equipment Drain Sump Fill Rate). The maximum measurable identified leak rate (Pen 2) in the Control Room at WNP-2 is 30 gpm, therefore, 30 gpm is used instead of the 50 gpm limit recommended by NUMARC.

A 70 R/hr reading on CMS-RIS-27e and CMS-RIS-27F is used to indicate a loss of the Reactor Coolant System barrier. This value assumes a 0.1% clad damage and the instantaneous release and dispersal of the reactor coolant noble gas and iodine inventory into the drywell atmosphere. The value of 0.1% clad damage was assumed to be the greatest amount of fuel failure under which power operation could occur.

The 1.68 psig drywell pressure for the Reactor Coolant System barrier loss is based on the drywell pressure scram and isolation setpoint and indicates a Loss of Coolant Accident (LOCA). A potential loss of the Reactor Coolant System barrier would not result in an increasing drywell pressure and, therefore, no indicator is provided. The qualifier of "with indications of RCS leak inside the drywell" is included as an indicator of RCS boundary degradation and eliminates a drywell pressure increase due to loss of drywell ventilation.

REFERENCE(S):

NUMARC NESP-007, Methodology for Development of Emergency Action Levels, Rev. 2, Fission Product Barrier Basis Information for Table 3

WNP-2 Fission Product Barrier Evaluation

WNP-2 Plant Specific EAL Guideline, PC1.5/PC5.2 + RCS1.2, RCS3.1, RCS2.1

3.3.G.1 General Emergency

NUMARC IC: A loss of any two fission product barriers and loss or potential loss of the third

APPLICABILITY:

| Operating Conditions | 1 | 2 | 3 | | | |
|---|---|---|---|---|---|---|

EMERGENCY ACTION LEVEL:

PC $H_2$ and $O_2$ concentrations GT 6% $H_2$ and 5% $O_2$

BASES:

This indicator represents a loss of both the fuel clad and RCS with a potential loss of the PC barrier.

Hydrogen and Oxygen concentrations at or above PPM 5.2.1, "Primary Containment Control", Table 19, Combustible Limits, in the drywell or wetwell represent a potential for a deflagration with a subsequent containment failure.

When hydrogen and oxygen concentrations approach or exceed combustible limits (6% hydrogen and 5% oxygen, respectively), the fuel clad barrier has been lost because, in order to reach such hydrogen concentration levels, it would have been necessary to overheat the fuel to metal-water reaction temperatures. For these concentrations to be detected in the primary containment would also indicate that, as a minimum, a potential loss of the RCS barrier has occurred.

REFERENCE(S):

NUMARC NESP-007, Methodology for Development of Emergency Action Levels, Rev. 2, Fission Product Barrier Basis Information for Table 3

WNP-2 Fission Product Barrier Evaluation

WNP-2 Plant Specific EAL Guideline, PC1.4

3.4.U.1 Unusual Event

NUMARC IC: Loss or potential loss of primary containment

APPLICABILITY:

| Operating Conditions | 1 | 2 | 3 | | | |
|---|---|---|---|---|---|---|

EMERGENCY ACTION LEVEL:

Failure of containment isolation valves (LCS Table 1.6.1.3-1) in any one line to close following auto or manual initiation
AND
downstream pathway outside primary containment exists

BASES:

This indicator is considered to be a loss of the PC barrier.

The failure to isolate condition is intended to cover containment isolation failures allowing a direct flow path to the environment such as a failure of MSIVs to close with open valves downstream to the turbine or condenser. Downstream path outside primary containment does not mean leakage incidental to normal system integrity. Only those penetrations required to isolate per Technical Specifications should be considered.

REFERENCE(S):

NUMARC NESP-007, Methodology for Development of Emergency Action Levels, Rev. 2, Fission Product Barrier Basis Information for Table 3

WNP-2 Fission Product Barrier Evaluation

WNP-2 Plant Specific EAL Guideline, PC2.1

3.4.A.1 Alert

NUMARC IC: Main steam line break outside containment with isolation

APPLICABILITY:

| Operating Conditions | 1 | 2 | 3 | | | |
|---|---|---|---|---|---|---|

EMERGENCY ACTION LEVEL:

Indications of a MSL break
AND
MSIV closure has isolated the break

BASES:

This EAL is based on design basis accident analyses which show that even if MSIV closure occurs within design limits, offsite (Exclusion Area Boundary) dose consequences from a "puff" release could exceed 50 but less than 100 mrem total effective dose equivalent (TEDE). Specifically FSAR Table 15.6-9 demonstrates 53 mrem TEDE. Only MSIV isolation signals that definitely indicate leakage outside primary RCS boundary with a path to the environment are included.

Examples of indications of Main Steam Line breaks are, but not limited to:

- Main Steam Line Tunnel temperature greater than 156°F on LD-TR-608, P-632 and "LEAK DET MSL TUNNEL TEMP HI-HI" alarm(s) on P-601-A2 &/or A3.
- Main Steam Line Tunnel delta temperature greater than 80°F on LD-TR-611, P-632 and "LEAK DET MSL TUNNEL HI-HI" alarm(s) on P601-A2 &/or A3.
- Main Steam Line flow greater than 140% as indicated by "MSL ISOL MAIN STEAM LINE FLOW HIGH" alarm on P-601-A11 &/or A12.

REFERENCE(S):

NUMARC NESP-007, Methodology for Development of Emergency Action Levels, Rev. 2, Fission Product Barrier Basis Information for Table 3

WNP-2 Plant Specific EAL Guideline, RCS1.1

3.4.S.1 Site Area Emergency

NUMARC IC: Loss or potential loss of either fuel clad or RCS barrier in conjunction with a loss or potential loss of containment

APPLICABILITY:

| Operating Conditions | 1 | 2 | 3 | | | |
|---|---|---|---|---|---|---|

EMERGENCY ACTION LEVEL:

Failure of containment isolation valves (LCS Table 1.6.3.1-1) in any one line to close following auto or manual initiation AND downstream pathway outside of primary containment exists
AND ANY of following:

- Total RCS leakage GT 30 gpm inside PC or EDR-FRS-623, Pen 2 upscale high
- Containment Radiation Monitor CMS-RIS-27E and CMS-RIS-27F reading GT 70 R/hr
- Drywell pressure GT 1.68 psig with indications of RCS leakage inside drywell

BASES:

This indicator is considered to be a loss of the PC barrier in conjunction with a loss or potential loss of RCS barrier.

The failure to isolate condition is intended to cover containment isolation failures allowing a direct flow path to the environment such as a failure of MSIVs to close with open valves downstream to the turbine or condenser. Downstream path outside primary containment does not mean leakage incidental to normal system integrity. Only those penetrations required to isolate per Technical Specifications should be considered.

Total leakage is considered to be the total of both identified and unidentified leakage as measured on EDR-FRS-623 pen 1 (unidentified - Floor Drain Sump Fill Rate) and pen 2 (identified - Equipment Drain Sump Fill Rate). The maximum measurable identified leak rate (pen 2) in the Control Room at WNP-2 is 30 gpm, therefore, 30 gpm is used instead of the 50 gpm limit recommended by NUMARC.

A 70 R/hr reading on CMS-RIS-27E and CMS-RIS-27F is used to indicate a loss of the Reactor Coolant System barrier. This value assumes a 0.1% clad damage and the instantaneous release and dispersal of the reactor coolant noble gas and iodine inventory into the drywell atmosphere. The value of 0.1% clad damage was assumed to be the greatest amount of fuel failure under which power operation could occur.

The 1.68 psig drywell pressure for the Reactor Coolant System barrier loss is based on the drywell pressure scram and isolation setpoint and indicates a Loss of Coolant Accident (LOCA). A potential loss of the Reactor Coolant System barrier would not result in an increasing drywell pressure and, therefore, no indicator is provided. The qualifier of "with indications of RCS leak inside drywell" is included as an indicator of RCS boundary degradation and eliminates a drywell pressure increase due to a loss of drywell ventilation.

REFERENCE(S):

NUMARC NESP-007, Methodology for Development of Emergency Action Levels, Rev. 2, Fission Product Barrier Basis Information for Table 3

WNP-2 Fission Product Barrier Evaluation

WNP-2 Plant Specific EAL Guideline, PC2.1 + RCS1.2, RCS3.1, RCS2.1

3.4.S.2 Site Area Emergency

NUMARC IC: Loss or potential loss of either fuel clad or RCS barrier in conjunction with a loss or potential loss of containment

APPLICABILITY:

| Operating Conditions | 1 | 2 | 3 | | | |
|---|---|---|---|---|---|---|

EMERGENCY ACTION LEVEL:

Indications of a MSL break
AND
MSIV closure has not isolated the break

BASES:

This indicator is considered to be a loss of the PC barrier in conjunction with a loss or potential loss of RCS barrier.

Examples of indications of Main Steam Line breaks are, but not limited to:

- Main Steam Tunnel temperature greater than 156°F on LD-TR-608, P-632 and "LEAK DET MSL TUNNEL TEMP HI-HI" alarm(s) on P-601-A2 or A3, or both.
- Main Steam Line Tunnel delta temperature greater than 80°F on LD-TR-611, P-632 and "LEAK DET MSL TUNNEL HI-HI" alarm(s) on P-701-A2 or A3, or both.
- Main Steam Line flow greater than 140% as indicated by "MSL ISOL MAIN STEAM LINE FLOW HI" alarm on P-601-A11 or A12, or both.

REFERENCE(S):

NUMARC NESP-007, Methodology for Development of Emergency Action Levels, Rev. 2, Fission Product Barrier Basis Information for Table 3

WNP-2 Plant Specific EAL Guideline, RCS1.1

3.4.G.1 General Emergency

NUMARC IC: A loss of any two fission product barriers and loss or potential loss of the third

APPLICABILITY:

| Operating Conditions | 1 | 2 | 3 | | | |
|---|---|---|---|---|---|---|

EMERGENCY ACTION LEVEL:

Intentional venting of Primary Containment to prevent failure.

BASES:

This indicator represents a loss of both the fuel clad and RCS with a loss of the PC barrier.

Venting, if necessary to prevent failure of primary containment, is included as a loss of primary containment. This is specified in Emergency Operating Procedures when containment hydrogen and oxygen concentrations are in excess of, or cannot be determined to be below, combustible limits or when wetwell pressure approaches PCPL. However, routine venting per PPM 2.3.1, as long as radioactivity release rates are maintained, is <u>not</u> considered a loss of primary containment.

For either condition, a loss of the primary containment barrier exists because the containment is being vented. Additional losses and potential losses of fission product barriers that must also occur when either of these conditions occur are discussed below.

a. When wetwell pressure approaches or exceeds the PCPL, a prior loss of the RCS barrier has occurred due to the elevated containment pressure and the requirement to emergency depressurize the RPV at pressures below 39 psig (Pressure Suppression Pressure). Continued wetwell pressure increase could result in complete and uncontrolled loss of the primary containment due to containment failure. With no assurance as to where the containment may fail, an attendant loss of the suppression pool should be assumed with a consequent complete and unrecoverable loss of core cooling whereby the degraded core condition and loss of containment integrity releases substantial amounts of radioactivity to the general environment.

b. When hydrogen and oxygen concentrations approach or exceed combustible limits (6% hydrogen and 5% oxygen, respectively), the fuel clad barrier has been lost because, in order to reach such hydrogen concentration levels, it would have been necessary to overheat the fuel to metal-water reaction temperatures. For these concentrations to be detected in the primary containment would also indicate that, as a minimum, a potential loss of the RCS barrier has occurred.

REFERENCE(S):

NUMARC NESP-007, Methodology for Development of Emergency Action Levels, Rev. 2, Fission Product Barrier Basis Information for Table 3

WNP-2 Fission Product Barrier Evaluation

WNP-2 Plant Specific EAL Guideline, PC2.1

## 4 SECONDARY CONTAINMENT (SC)

The secondary containment is comprised of the reactor building and associated ventilation, isolation and effluent systems. The secondary containment serves as an effective fission product barrier and is designed to minimize any ground level release of radioactive materials which might result from a serious accident.

The reactor building provides secondary containment during reactor operation and serves as primary containment when the reactor is shutdown and the drywell is open, as during refueling. Because the secondary containment is an integral part of the complete containment system, conditions which pose a threat to vital equipment located in the secondary containment are classifiable as emergencies.

There are two secondary containment parameters which are indicative of conditions which may pose a threat to secondary containment integrity or equipment located in secondary containment or are indicative of a direct release by a primary system into secondary containment:

- Secondary Containment Temperatures: Abnormally high secondary containment area temperatures can also pose a threat to the operability of vital equipment located inside secondary containment including RPV water level instrumentation. High area temperatures may limit personnel accessibility to vital areas. High area temperatures may also be indicative of either primary system discharges into secondary containment or fires.

- Secondary Containment Area Radiation Levels: Abnormally high area radiation levels in secondary containment, although not necessarily posing a threat to equipment operability, may pose a threat to personnel safety and the ability to operate vital equipment due to a lack of accessibility. Abnormally high area radiation levels may also be the result of a primary system discharging into the secondary containment and be indicative of precursors to significant radioactivity release to the environment.

4 Secondary Containment 4.1 Reactor Building Temperature/Radiation Levels

4.1.S.1 Site Area Emergency

NUMARC IC: Loss or potential loss of either fuel clad or RCS barrier in conjunction with a loss or potential loss of containment

APPLICABILITY:

| Operating Conditions | 1 | 2 | 3 | | | |
|---|---|---|---|---|---|---|

EMERGENCY ACTION LEVEL:

Unisolable primary system discharging outside PC resulting in any area temperature or radiation level above Maximum Safe Operating Values (as defined in the Emergency Operating Procedures).

BASES:

This indicator is considered to be a loss of the PC in conjunction with a potential loss RCS barrier.

The presence of elevated area temperatures and/or radiation levels in the secondary containment may be indicative of an unisolable primary system leakage outside the primary containment. These conditions represent a loss of the containment barrier and a potential loss of the RCS barrier.

REFERENCE(S):

NUMARC NESP-007, Methodology for Development of Emergency Action Levels, Rev. 2, Fission Product Barrier Basis Information for Table 3

WNP-2 Fission Product Barrier Evaluation

WNP-2 Plant Specific EAL Guideline, RCS1.3/PC2.3

4.1.G.1 General Emergency

NUMARC IC: A loss of any two fission product barriers and loss or potential loss of the third

APPLICABILITY:

| Operating Conditions | 1 | 2 | 3 | | | |
|---|---|---|---|---|---|---|

EMERGENCY ACTION LEVEL:

Unisolable primary system discharging outside PC resulting in any area temperature or radiation level above Maximum Safe Operating Values (as defined in the Emergency Operating Procedures).
AND ANY of the following:

- Containment Radiation Monitor CMS-RIS-27E and CMS-RIS-27F reading GT 3,600 R/hr
- RPV level LT -161 inches or cannot be determined
- Coolant activity GT 300 $\mu$Ci/gm dose equivalent iodine

BASES:

This indicator is considered to be a loss of the PC in conjunction with a loss or potential loss RCS barrier and loss or potential loss of the fuel clad barrier.

The presence of elevated area temperatures and/or radiation levels in the secondary containment may be indicative of an unisolable primary system leakage outside the primary containment. These conditions represent a loss of the containment barrier and a potential loss of the RCS barrier.

A 3,600 R/hr reading on CMS-RIS-27E and CMS-RIS-27F is used to indicate a release of reactor coolant, with elevated activity indicative of fuel damage, into the drywell. Therefore, this condition represents loss of both the fuel clad and RCS barriers. This value assumes an instantaneous release and dispersal of the reactor coolant noble gas and iodine inventory associated with coolant concentration associated with 5% clad failures into the drywell atmosphere. WNP-2 has elected to provide an example dealing with the top end of the 2-5% range discussed in NESP-007. This value assumes an instantaneous release and dispersal of the reactor coolant noble gas and iodine inventory into the drywell atmosphere.

Indicating fuel clad barrier potential Loss at -161″ (Top of Active Fuel) ensures that an emergency is declared before fuel perforation occurs. An unintentional level decrease to below -161″ is also indicative of a large RCS break, or a smaller break with loss of high pressure makeup.

Fuel Clad barrier damage is indicated by a coolant activity of 300 $\mu$Ci/gm dose equivalent I-131. This amount of activity is well above that expected for iodine spikes and corresponds to approximately 2-5% fuel clad failure in accordance with assessment performed by the NUMARC EAL task force. This amount of clad failure indicates significant clad heating and, thus, the Fuel Clad barrier is considered lost.

REFERENCE(S):

NUMARC NESP-007, Methodology for Development of Emergency Action Levels, Rev. 2, Fission Product Barrier Basis Information for Table 3

WNP-2 Fission Product Barrier Evaluation

Engineering Calculation No. NE-02-94-57

WNP-2 Plant Specific EAL Guideline, RCS1.3/PC2.3 + FC1.1, FC3.1, RCS4.1

## 5 RADIOACTIVITY RELEASE

Many EALs are based on actual or potential degradation of fission product barriers because of the increased potential for offsite radioactivity release. Degradation of fission product barriers though, is not always apparent via non-radiological symptoms. Therefore, direct indication of increased radiological effluents are appropriate symptoms for emergency classification.

At lower levels, abnormal radioactivity releases may be indicative of a failure of containment systems or precursors to more significant releases. At higher release rates, offsite radiological conditions may result which require offsite protective actions.

There are two basic indications of radioactivity release rates which warrant emergency classifications.

- Offsite Release: Direct indication of effluent radiation monitoring systems provides a rapid assessment mechanism to determine releases in excess of classifiable limits. Projected offsite doses (based on effluent monitor readings) or actual offsite field measurements indicating doses or dose rates above classifiable limits.

- Area Radiation: Radiation monitoring systems are specifically designed to provide indication of loss of control of radioactive material in the plant which may impede personnel access to safe shutdown areas.

5 Radioactivity Release 5.1 Offsite Release

5.1.U.1 Unusual Event

NUMARC IC: AU1 - Any unplanned release of gaseous or liquid radioactivity to the environment that exceeds two times ODCM limits for 60 minutes or longer.

APPLICABILITY:

| Operating Conditions | 1 | 2 | 3 | 4 | 5 | def |
|---|---|---|---|---|---|---|

EMERGENCY ACTION LEVEL:

A valid reading exists which exceeds or is expected to exceed Table 3 column "UE" for GT 60 min.

BASES:

Unplanned releases that continue for 60 minutes or longer represent an uncontrolled situation and, hence, a potential degradation in the level of safety. The final integrated dose (which is very low in the Unusual Event emergency class) is not the primary concern here; rather, it is the degradation in plant control implied by the fact that the release was not isolated within 60 minutes.

It is not intended that the release be averaged over 60 minutes. Further, the ED should not wait until 60 minutes has elapsed, but should declare the event as soon as it is determined that the release will exceed 60 minutes. It is expected that the offsite dose analysis will be performed on the Emergency Dose Projection System (EDPS) using actual meteorology.

If the monitor reading(s) is sustained for longer than 60 minutes and the required assessments cannot be completed within this period, then the declaration should be made based on the valid reading.

Monitor indications and alarms are based on the methodology of the ODCM which demonstrates compliance with 10 CFR 20 and 10 CFR 50, Appendix I, requirements. The six year average meteorology is also used for basing alarm setpoints.

REFERENCE(S):

WNP-2 Technical Specifications

WNP-2 Offsite Dose Calculation Manual

NUMARC NESP-007, Methodology for Development of Emergency Action Levels, Rev. 2, Unusual Event AU1

WNP-2 Plant Specific EAL Guideline, AU1.2

5 Radioactivity Release 5.1 Offsite Release

5.1.U.2 Unusual Event

NUMARC IC: AU1 - Any unplanned release of gaseous or liquid radioactivity to the environment that exceeds two times ODCM limits for 60 minutes or longer.

APPLICABILITY:

| Operating Conditions | 1 | 2 | 3 | 4 | 5 | def |
|---|---|---|---|---|---|---|

EMERGENCY ACTION LEVEL:

Offsite dose calculations indicate offsite dose rates GT Table 4 column "UE"
OR
Sample analysis indicates release GT 2 times ODCM 6.2.1.1 limits for GT 60 min.

BASES:

Unplanned releases that continue for 60 minutes or longer represent an uncontrolled situation and, hence, a potential degradation in the level of safety. The final integrated dose (which is very low in the Unusual Event emergency class) is not the primary concern here; rather, it is the degradation in plant control implied by the fact that the release was not isolated within 60 minutes.

It is not intended that the release be averaged over 60 minutes. Further, the ED should not wait until 60 minutes has elapsed, but should declare the event as soon as it is determined that the release will exceed 60 minutes. It is expected that the offsite dose analysis will be performed on the Emergency Dose Projection System (EDPS) using actual meteorology.

REFERENCE(S):

WNP-2 Technical Specifications

WNP-2 Offsite Dose Calculation Manual

NUMARC NESP-007, Methodology for Development of Emergency Action Levels, Rev. 2, Unusual Event AU1

WNP-2 Plant Specific EAL Guideline, AU1.1

5 Radioactivity Release 5.1 Offsite Release

5.1.A.1 Alert

NUMARC IC: AA1 - Any unplanned release of gaseous or liquid radioactivity to the environment that exceeds 200 times the radiological specifications for 15 minutes or longer.

APPLICABILITY:

| Operating Conditions | 1 | 2 | 3 | 4 | 5 | def |
|---|---|---|---|---|---|---|

EMERGENCY ACTION LEVEL:

A valid reading exists which exceeds or is expected to exceed Table 3 column "Alert" for GT 15 min.

BASES:

The required release duration has been reduced to 15 minutes in recognition of the decreased plant safety, and to provide prompt classification. It is expected that the offsite dose analysis will be performed on the Emergency Dose Projection System (EDPS).

If the monitor reading(s) is sustained for longer than 15 minutes and the required assessments cannot be completed within this period, then the declaration should be made based on the valid reading.

REFERENCE(S):

WNP-2 Technical Specifications

WNP-2 Offsite Dose Calculation Manual

NUMARC NESP-007, Methodology for Development of Emergency Action Levels, Rev. 2, Unusual Event AA1

WNP-2 Plant Specific EAL Guideline, AA1.2

5.1.A.2 Alert

NUMARC IC: AA1 - Any unplanned release of gaseous or liquid radioactivity to the environment that exceeds 200 times the radiological specifications for 15 minutes or longer.

APPLICABILITY:

| Operating Conditions | 1 | 2 | 3 | 4 | 5 | def |
|---|---|---|---|---|---|---|

EMERGENCY ACTION LEVEL:

Offsite dose calculations indicate dose rates GT Table 4 column "Alert"
OR
Sample analysis indicates release GT 200 times ODCM 6.2.1.1 limits for GT 15 min.

BASES:

The required release duration has been reduced to 15 minutes in recognition of the decreased plant safety, and to provide prompt classification. It is expected that the offsite dose analysis will be performed on the Emergency Dose Projection System (EDPS). If a dose projection cannot be performed and the monitor reading is sustained for longer than the specified time, then the declaration must be made based on the valid reading.

REFERENCE(S):

WNP-2 Technical Specifications

WNP-2 Offsite Dose Calculation Manual

NUMARC NESP-007, Methodology for Development of Emergency Action Levels, Rev. 2, Unusual Event AA1

WNP-2 Plant Specific EAL Guideline, AA1.1

5 Radioactivity Release 5.1 Offsite Release

5.1.S.1 Site Area Emergency

NUMARC IC: AS1 - Offsite dose resulting from an actual or imminent release of gaseous radioactivity that exceeds 100 mrem TEDE or 500 mrem thyroid CDE for the actual or projected duration of the release.

APPLICABILITY:

| Operating Conditions | 1 | 2 | 3 | 4 | 5 | def |
|---|---|---|---|---|---|---|

EMERGENCY ACTION LEVEL:

A valid reading exists which exceeds or is expected to exceed Table 3 column "Site Area" for GT 15 min.

BASES:

Effluent readings may be used for the classification of fast breaking events until actual dose projections can be made. Dose assessment, since it uses current plant values, will be more accurate and should be used.

The 100 mrem integrated dose in this Initiating Condition is based on 10 CFR 20 annual average population exposure. This value also provides a desirable gradient (one order of magnitude) between the Alert, Site Area Emergency and General Emergency classes. It is calculated that exposures less than this time limit are not consistent with the Site Area Emergency class description. The 500 mrem integrated thyroid CDE dose was established in consideration of the 1:5 ratio of the EPA Protection Action Guidelines for TEDE and Thyroid Committed Dose Equivalent.

In establishing the emergency action levels, a release duration of one hour is assumed. If an emergency dose projection cannot be performed and the monitor reading(s) is expected to exceed 15 minutes, then the declaration should be made based on the valid reading.

REFERENCE(S):

NUMARC NESP-007, Methodology for Development of Emergency Action Levels, Rev. 2, Site Area Emergency AS1

10 CFR 20

WNP-2 Offsite Dose Calculation Manual

Environmental Protection Agency 400, Manual of Protective Action Guides and Protective Actions for Nuclear Incidents, October 15, 1991

WNP-2 Plant Specific EAL Guideline, AS1.3, AS1.4

5.1.S.2 Site Area Emergency

NUMARC IC: AS1 - Offsite dose resulting from an actual or imminent release of gaseous radioactivity that exceeds 100 mrem TEDE or 500 mrem thyroid CDE for the actual or projected duration of the release.

APPLICABILITY:

| Operating Conditions | 1 | 2 | 3 | 4 | 5 | def |
|---|---|---|---|---|---|---|

EMERGENCY ACTION LEVEL:

Offsite dose calculations indicate doses or dose rates GT Table 4 column "Site Area"
OR
Field survey or survey sample analysis indicates offsite dose rates GT Table 4 column "Site Area"

BASES:

The 100 mrem integrated dose in this Initiating Condition is based on the proposed 10 CFR 20 annual average population exposure. This value also provides a desirable gradient (one order of magnitude) between the Alert, Site Area Emergency and General Emergency classes. It is calculated that exposures less than this time limit are not consistent with the Site Area Emergency class description. The 500 mrem integrated thyroid CDE dose was established in consideration of the 1:5 ratio of the EPA Protection Action Guidelines for TEDE and Thyroid Committed Dose Equivalent.

In establishing the emergency action levels, a release duration of one hour is assumed. If an emergency dose projection cannot be performed and the monitor reading(s) is expected to exceed 15 minutes and the required assessments cannot be completed within this period, then the declaration should be made based on the valid reading.

REFERENCE(S):

NUMARC NESP-007, Methodology for Development of Emergency Action Levels, Rev. 2, Site Area Emergency AS1

10 CFR 20

WNP-2 Offsite Dose Calculation Manual

Environmental Protection Agency 400, Manual of Protective Action Guides and Protective Actions for Nuclear Incidents, October 15, 1991

WNP-2 Plant Specific EAL Guideline, AS1.1

5 Radioactivity Release 5.1 Offsite Release

5.1.G.1 General Emergency

NUMARC IC: AG1 - Offsite dose resulting from an actual or imminent release of gaseous radioactivity that exceeds 1000 mrem TEDE or 5000 mrem thyroid CDE for the actual or projected duration of the release using actual meteorology.

APPLICABILITY:

| Operating Conditions | 1 | 2 | 3 | 4 | 5 | def |
|---|---|---|---|---|---|---|

EMERGENCY ACTION LEVEL:

A valid reading exists which exceeds or <u>is expected</u> to exceed Table 3 column "General" for GT 15 min.

BASES:

Effluent readings may be used for the classification of fast breaking events until actual dose projections can be made. Dose assessment, since it uses current plant values, will be more accurate and should be used.

In establishing the emergency action levels, a release duration of one hour is assumed. If an emergency dose projection cannot be performed and the monitor reading(s) is expected to exceed 15 minutes, then the declaration should be made based on the valid reading.

The 1000 mrem Total Effective Dose Equivalent or 5000 mrem thyroid Committed Dose Equivalent integrated dose are based on the EPA protective action guidance which indicates that public protective actions are indicated if the dose exceeds 1 rem Total Effective Dose Equivalent or 5 rem thyroid Committed Dose Equivalent. This logic is consistent with the emergency class description for a General Emergency and constitutes the upper level of the desirable gradient for the Site Area Emergency.

Actual meteorology is specifically identified in the Initiating Condition since it gives the most accurate dose assessment.

REFERENCE(S):

NUMARC NESP-007, Methodology for Development of Emergency Action Levels, Rev. 2, Site Area Emergency AS1

10 CFR 20

WNP-2 Offsite Dose Calculation Manual

Environmental Protection Agency 400, Manual of Protective Action Guides and Protective Actions for Nuclear Incidents, October 15, 1991

WNP-2 Plant Specific EAL Guideline, AG1.3, AG1.4

5.1.G.2 General Emergency

NUMARC IC: AG1 - Boundary dose resulting from an actual or imminent release of gaseous radioactivity that exceeds 1000 mrem TEDE or 5000 mrem thyroid CDE equivalent for the actual or projected duration of the release using actual meteorology.

APPLICABILITY:

| Operating Conditions | 1 | 2 | 3 | 4 | 5 | def |
|---|---|---|---|---|---|---|

EMERGENCY ACTION LEVEL:

Offsite dose calculations indicate doses or does rates GT Table 4 column "General"
OR
Field survey or survey sample analysis indicates offsite dose rates GT Table 4 column "General".

BASES:

The 1000 mrem Total Effective Dose Equivalent or 5000 mrem thyroid Committed Dose Equivalent integrated dose are based on the EPA protective action guidance which indicates that public protective actions are indicated if the dose exceeds 1 rem Total Effective Dose Equivalent or 5 rem thyroid Committed Dose Equivalent. This logic is consistent with the emergency class description for a General Emergency and constitutes the upper level of the desirable gradient for the Site Area Emergency.

Actual meteorology is specifically identified in the Initiating Condition since it gives the most accurate dose assessment.

REFERENCE(S):

NUMARC NESP-007, Methodology for Development of Emergency Action Levels, Rev. 2, Site Area Emergency AS1

10 CFR 20

WNP-2 Offsite Dose Calculation Manual

Environmental Protection Agency 400, Manual of Protective Action Guides and Protective Actions for Nuclear Incidents, October 15, 1991

WNP-2 Plant Specific EAL Guideline, AG1.1

| Table 3 Effluent Monitor Classification Thresholds | | | | |
|---|---|---|---|---|
| Monitor | UE | Alert | Site Area | General |
| NOTE: If a dose projection cannot be performed and the monitor reading is sustained for longer than the specified time, then the declaration must be made based on the valid reading. | | | | |
| | 60 min. | 15 min. | 15 min | 15 min |
| PRM-RE-1B Reactor Bldg. Exhaust Inter. | 1.35E4 cps | N/A | N/A | N/A |
| PRM-RE-1C Reactor Bldg. Exhaust Hi | N/A | 1.14E3cps | 9.65E3 cps | 9.35E4 cps |
| TEA-RIS-13/13A Turbine Bldg. Exhaust | 1.7E4 cpm | 4.4E4 cpm | 4.4E5 cpm | 8 PMU |
| WEA-RIS-14/14A RadWaste Bldg. Exhaust | 1.2E5 cpm | 1.7E5 cpm | 1.7E6 cpm | 26 PMU |
| TSW-RIS-5 TSW Effluent | 3.9E3 cpm | 3.9E5 cpm | N/A | N/A |
| FDR-RIS-606 Rad. Waste Effluent | 2 x Hi-Hi alarm | 200 x Hi-Hi alarm | N/A | N/A |
| SW-RIS-604 SW 'A' Process | 2.0E2 cps | 2.0E4 cps | N/A | N/A |
| SW-RIS-605 SW 'B' Process | 2.0E2 cps | 2.0E4 cps | N/A | N/A |

cps=counts per second cpm=counts per minute PMU=panel meter units N/A=not applicable (outside of meter range)

| Table 4 Offsite Dose Calculation/Field Survey Sample Analysis Classification Thresholds at 1.2 miles | | | | |
|---|---|---|---|---|
| | UE | Alert | Site Area | General |
| TEDE | N/A | N/A | 100 mrem | 1000 mrem |
| CDE Thyroid | N/A | N/A | 500 mrem | 5000 mrem |
| TEDE rate | 0.1 mrem/hr | 10 mrem/hr | 100 mrem/hr[1] | 1000 mrem/hr[1] |
| CDE Thyroid rate | 0.3 mrem/hr | 50 mrem/hr | 500 mrem/hr[2] | 5000 mrem/hr[2] |

[1] (Projected GT 60 min)
[2] (For GT 1 HR inhalation)

5 Radioactivity Release 5.2 Area Radiation

5.2.U.1 Unusual Event

NUMARC IC: AU2 - Unexpected increase in plant radiation levels.

APPLICABILITY:

| Operating Conditions | 1 | 2 | 3 | 4 | 5 | def |
|---|---|---|---|---|---|---|

EMERGENCY ACTION LEVEL:

Valid reading GT 5E3 mR/hr on ANY of the following ARMs:

- ARM-RIS-4 thru ARM-RIS-18
- ARM-RIS-20 thru ARM-RIS-30
- ARM-RIS-32 thru ARM-RIS-34 (High Range)

BASES:

This Initiating Condition is not applicable for alarms resulting from the controlled movement of radioactive materials in the plant or expected increases in radiation levels due to the backwashing of demineralizer filters or other planned operation.

Unplanned increases in in plant radiation levels represent a degradation in the control of radioactive material and represent a potential degradation in the level of safety of the plant. This EAL escalates to an ALERT per 5.2.A.1 if the radiation level increase impairs safe operation of the plant.

REFERENCE(S):

WNP-2 Technical Specifications

WNP-2 Instrument Master Data Sheets for referenced instruments

NUMARC NESP-007, Methodology for Development of Emergency Action Levels, Rev. 2, Unusual Event AU2

WNP-2 Plant Specific EAL Guideline, AU2.4

5.2.A.1 Alert

NUMARC IC: AA2 - Release of radioactive material or increases in radiation levels within the facility that impedes operation of systems required to maintain safe operations or to establish or maintain cold shutdown.

APPLICABILITY:

| Operating Conditions | 1 | 2 | 3 | 4 | 5 | def |
|---|---|---|---|---|---|---|

EMERGENCY ACTION LEVEL:

Valid reading GT 15 mR/hr on ARM-RIS-19 (CR)
OR
Valid reading GT 1E4 mR/hr on ANY of the following ARMs:

- ARM-RIS-4 thru ARM-RIS-18
- ARM-RIS-23
- ARM-RIS-24
- ARM-RIS-32 thru ARM-RIS-34 (High Range)

BASES:

Areas requiring continuous occupancy include the Control Room. The value of 15 mrem/hr is derived from the Generic Design Criteria (GDC) 19 value of 5 rem in 30 days with adjustment for expected occupancy times. Although Section III.D.3 or NUREG 0737, "Clarification of TMI Action Plan Requirements", provides that the 15 mrem/hr value can be averaged over the 30 days, the value is used here without averaging, as a 30-day duration implies an event potentially more significant than an Alert.

This Initiating Condition addresses increased radiation levels that impede necessary access to operating stations or other areas containing equipment that must be operated manually in order to maintain safe operation or perform a safe shutdown. It is this impaired ability to operate the plant that results in the actual or potential substantial degradation of the level of safety of the plant. The cause and/or magnitude of the increase in radiation levels is not a concern of this Initiating Condition.

This Initiating Condition is not meant to apply to increases in the containment radiation monitors as these events are addressed in the fission product barrier Initiating Conditions, nor is it intended to apply to anticipated temporary increases due to planned events (e.g., incore detector movement, radwaste container movement, depleted resin transfers, etc.).

The Emergency Director should determine the cause of the increase in radiation levels and review other Initiating Conditions for applicability.

REFERENCE(S):

NUMARC NESP-007, Methodology for Development of Emergency Action Levels, Rev. 2, AA3

NUREG 0737, Clarification of TMI Action Plan Requirements

WNP-2 Instrument Master Data Sheets for referenced instruments

WNP-2 Plant Specific EAL Guideline, AA3.1, AA3.2

## 6 ELECTRICAL FAILURES

Loss of vital plant electrical power can compromise plant safety system operability including decay heat removal and emergency core cooling systems which may be necessary to ensure fission product barrier integrity.

The events of this category have been grouped into the following two loss of electrical power types:

- Loss of AC Power Sources: This category includes losses of onsite and/or offsite AC power sources including station blackout events.

- Loss of DC Power Sources: This category involves total losses of vital plant 125 vdc power sources.

6 Electrical Failures 6.1 AC Power Loss

6.1.U.1 Unusual Event

NUMARC IC: SU1 - Loss of all offsite power to critical AC busses for greater than 15 minutes.

APPLICABILITY:

| Operating Conditions | 1 | 2 | 3 | 4 | 5 | def |
|---|---|---|---|---|---|---|

EMERGENCY ACTION LEVEL:

Power is unavailable to SM-7 and SM-8 from offsite AC sources GT 15 min.

BASES:

Even though power may still be available from offsite sources, there must be a functional flowpath to the Critical busses. Prolonged loss of offsite AC power reduces the required redundancy and potentially degrades the level of safety by rendering the plant more vulnerable to a complete loss of AC power (Station Blackout).

Fifteen minutes was selected as a threshold to exclude transient or momentary power losses.

Credit is not taken in this EAL for the Division 3 Standby Diesel Generator because it only supplies power to the High Pressure Core Spray (HPCS) pump and associated loads, but not for any long-term decay heat removal systems and, in particular, wetwell cooling mechanisms that would be essential subsequent to a station blackout.

Failure of either the Division 1 or Division 2 Standby Diesel Generator would escalate this event to Alert 6.1.A.2.

REFERENCE(S):

WNP-2 Technical Specifications

NUMARC NESP-007, Methodology for Development of Emergency Action Levels, Rev. 2, Unusual Event SU1

WNP-2 Plant Specific EAL Guideline, SU1.6

6.1.A.1 Alert

NUMARC IC: SA1 - Loss of all offsite power and loss of all onsite power to critical AC busses for greater than 15 minutes.

APPLICABILITY:

| Operating Conditions | | | | 4 | 5 | def |
|---|---|---|---|---|---|---|

EMERGENCY ACTION LEVEL:

Complete loss of <u>all</u> AC power to SM-7 and SM-8 GT 15 min.

BASES:

A loss of the minimum required offsite circuits and failure of the diesel generators to restore power to the emergency busses results in a loss of AC power to all plant safety systems requiring AC power including RHR, ECCS, containment cooling systems, spent fuel heat removal systems, and wetwell cooling systems. This significant reduction in decay heat removal is a substantial reduction in the level of safety of the plant due to a potential for temperature and pressure increases.

Credit is not taken in this EAL for the Division 3 Standby Diesel Generator because: 1) it is not required for all situations during Operating Conditions 4 and 5; and 2) although it does supply power to the HPCS pump which is a source of makeup water, it does not supply power to any systems that could be used to remove energy from the reactor and wetwell thereby limiting the long-term decay heat removal effectiveness.

When the plant is in a cold shutdown or refueling condition, RPV temperature and pressure are lower than they would be in other operating conditions. These lower pressures and temperatures increase the margin of safety allowing more time before power must be restored to an emergency bus than would be available during Operating Conditions 1, 2 or 3.

Fifteen minutes was selected as a conservative lower threshold that retains the anticipatory nature of EALs while excluding transient or momentary power losses.

Escalation of this event to a Site Area Emergency would be via the Increased Radiation Release to the Environment (see EAL 5.1.S.1 and 5.1.S.2) or Emergency Director Judgment (see EAL 9.1.S.1 and 9.1.S.2).

If this same set of conditions were to occur in Operating Conditions 1, 2 or 3, they would be classified a Site Area Emergency (see EAL 6.1.S.1).

REFERENCE(S):

WNP-2 Technical Specifications

NUMARC NESP-007, Methodology for Development of Emergency Action Levels, Rev. 2, Alert SA1

WNP-2 Plant Specific EAL Guideline, SA1.1

6.1.A.2 Alert

NUMARC IC: SA5 - Power capability to critical AC busses reduced to a single power source for greater than 15 minutes such that any additional single failure would result in station blackout.

APPLICABILITY:

| Operating Conditions | 1 | 2 | 3 | | | |
|---|---|---|---|---|---|---|

EMERGENCY ACTION LEVEL:

Available emergency bus AC power has been reduced to only one of the following sources for GT 15 min.

- TR-N1 (SM-7 and/or SM-8)
- TR-S (SM-7 and/or SM-8)
- TR-B (SM-7 and/or SM-8)
- DG-1 (SM-7)
- DG-2 (SM-8)

BASES:

This Initiating Condition and its associated EAL provide an escalation from EAL 6.1.U.1, "Loss of All Offsite Power to Critical Busses for Greater than 15 Minutes". The condition indicated by this EAL is the degradation of the offsite and onsite power systems such that any additional single failure would result in a station blackout.

This EAL includes a loss of both offsite power sources with only one diesel generator powering its respective emergency bus as well as a failure of both diesel generators such that they would not be able to power their respective emergency busses with only one offsite power source available.

Credit is not taken in this Initiating Condition for bus SM-4 and the Division 3 Standby Diesel Generator because they only supply power to the HPCS pump and associated loads but not to any decay heat removal systems that would be essential subsequent to a station blackout.

Power to busses SM-7 and SM-8 may come from either its respective standby diesel generator or from the Switch Yard through the Startup or Backup Transformers. Regardless of the source of power, failure of the remaining power source would result, at least temporarily, in a station blackout. The determining factor of whether or not to classify then becomes the amount of time that power is not available.

Escalation for a Site Area Emergency for a station blackout would be via EAL 6.1.S.1.

REFERENCE(S):

WNP-2 Technical Specifications

NUMARC NESP-007, Methodology for Development of Emergency Action Levels, Rev. 2, Alert SA5

WNP-2 Plant Specific EAL Guideline, SA5.1

6.1.S.1 Site Area Emergency

NUMARC IC: SS1 - Loss of all offsite power and loss of all onsite power to critical AC busses for greater than 15 minutes.

APPLICABILITY:

| Operating Conditions | 1 | 2 | 3 | | | |
|---|---|---|---|---|---|---|

EMERGENCY ACTION LEVEL:

Complete loss of all AC power to SM-7 and SM-8 GT 15 min.

BASES:

The condition indicated by this EAL is a station blackout and reflects a condition more serious than that described in Alert 6.1.A.2 in that both Division 1 and Division 2 Emergency Busses are deenergized and have been without power for 15 minutes or longer. Station blackouts lasting less than 15 minutes or electrical system faults resulting in only one emergency bus powered from only one source are classified according to Alert 6.1.A.2.

Credit is not taken in this EAL for Bus SM-4 and the Division 3 Standby Diesel Generator because it only supplies power to the HPCS pump and associated loads but not to any decay heat removal systems that would be essential subsequent to a station blackout.

Fifteen minutes was chosen as a conservative time to maintain the anticipatory nature of EALs while excluding transient or momentary power losses.

This event would be upgraded to a General Emergency per 6.1.G.1 if it appears that power cannot be restored to Bus SM-7 or SM-8 within 4 hours or if the Emergency Director determines that a loss or potential loss of a fission product barrier is imminent in accordance with the Fission Product Barrier Degradation table. Imminent in this context means mitigation strategies and actions are not successful in preventing a challenge to Fuel Clad, Reactor Coolant Pressure Boundary or Primary Containment.

REFERENCE(S):

WNP-2 Technical Specifications

WNP-2 FSAR, Section 1.5.2, SBO Coping Study

NUMARC NESP-007, Methodology for Development of Emergency Action Levels, Rev. 2, Site Area Emergency SS1

WNP-2 Plant Specific EAL Guideline, SS1.1

6.1.G.1 General Emergency

NUMARC IC: SG2 - Prolonged loss of all offsite power and prolonged loss of all onsite power to critical AC busses.

APPLICABILITY:

| Operating Conditions | 1 | 2 | 3 | | | |
|---|---|---|---|---|---|---|

EMERGENCY ACTION LEVEL:

Complete loss of all AC power to SM-7 and SM-8
AND either of the following:

In the judgment of the Emergency Director, AC power to either SM-7 or SM-8 is not likely to be restored within 4 hrs.
OR
RPV level LT -161 in.

BASES:

The condition indicated by this Initiating Condition and its associated EAL is a station blackout lasting long enough to degrade or potentially degrade a fission product barrier.

Loss of all AC power compromises all plant safety systems requiring AC power including RHR, ECCS, containment cooling systems, spent fuel heat removal systems and Wetwell cooling systems. Prolonged loss of all AC power may lead to loss of integrity of the fuel clad, reactor coolant system or containment.

Credit is not taken in this EAL for Bus SM-4 and the Division 3 Standby Diesel Generator because it only supplies power to the HPCS pump and associated loads but not to any decay heat removal systems that would be essential subsequent to a station blackout.

Under these conditions, fission product barrier monitoring capability may be degraded. It may be difficult to predict when power can be restored. However, the Emergency Director should determine the need to declare a General Emergency based on two major considerations:

1. Are there any present indications that core cooling is already degraded to the point that loss or potential loss of a fission product barrier is imminent? Imminent in this context means mitigation strategies and actions are not successful in preventing a challenge to Fuel Clad, Reactor Coolant Pressure Boundary or Primary Containment.

2. If there are no present indications of such core cooling degradation, how likely is it that power can be restored in time to assure that a loss of two barriers with a potential loss of the third can be prevented?

The first question is answered by indications of a loss of adequate core cooling, which for the purpose of this EAL is considered to be RPV water level less than -161 in. The second question should be answered by the Emergency Director by making a realistic assessment of the time required to complete any necessary repairs. This EAL requires the Emergency Director to classify the event as soon as his assessment indicates that necessary repairs will take longer than 4 hours rather than waiting for the 4 hours to expire.

REFERENCE(S):

WNP-2 Technical Specifications

NUMARC NESP-007, Methodology for Development of Emergency Action Levels, Rev. 2, General Emergency SG1

WNP-2 FSAR, Section 1.5.2, SBO Coping Study

WNP-2 Plant Specific EAL Guideline, SG1.1

6 Electrical Failures 6.2 DC Power Loss

6.2.U.1 Unusual Event

NUMARC IC: SU7 - Degradation of all critical DC power for greater than 15 minutes.

APPLICABILITY:

| Operating Conditions | | | | 4 | 5 | def |
|---|---|---|---|---|---|---|

EMERGENCY ACTION LEVEL:

Degradation of both Division 1 and Division 2 critical DC voltage as indicated by bus voltage LT 110 VDC on both 125 V Dist. Panels S1-1 and S1-2 voltmeters (Bd. C) for GT 15 min.

BASES:

This Initiating Condition and its EAL recognize a loss of DC power compromising the ability to monitor and control the removal of decay heat during cold shutdown, refueling, or defueled. This EAL is intended to be anticipatory in that the operating crew may not have the necessary indication and control of equipment needed to respond to the loss. This is a less severe condition than that described in Site Area Emergency 6.2.S.1 because initial temperatures and pressures are lower than they would be for Operating Conditions 1, 2 or 3 and, normally, less decay would be present.

Credit is not taken in this EAL for the Division 3 DC bus because it only supplies control power to loads associated with the HPCS pump and not to any decay heat removal systems.

The WNP-2 battery sizing calculations for the 125 VDC batteries, S1-1 and S1-2, reveal that a worst case LOCA analysis would permit a 15 minute margin between 106.3 volts and 105.0 volts. However, a conservative value of one hundred ten (110) volts DC is used as a minimum bus voltage. It is based on providing a 15 minute margin of operation before bus voltage drops below 105 volts DC at which time bus loads cannot be guaranteed to function. One hundred ten volts was also selected based on instrument accuracy of ± 2% full scale or ± 3 volts and scale increments of 2 volts.

The same set of conditions as described in this EAL would be classified Site Area Emergency 6.2.S.1 if they occurred during Operating Conditions 1, 2 or 3.

REFERENCE(S):

WNP-2 Technical Specifications

NUMARC NESP-007, Methodology for Development of Emergency Action Levels, Rev. 2, Unusual Event SU7

Engineering Calculation 2.05.01 (Battery Sizing Calc)

WNP-2 FSAR Section 8.3.2.1, Batteries

CVI 51A-00,8 Exide Manual

WNP-2 Plant Specific EAL Guideline, SU7.1

6.2.S.1 Site Area Emergency

NUMARC IC: SU7 - Degradation of all critical DC power for greater than 15 minutes.

APPLICABILITY:

| Operating Conditions | 1 | 2 | 3 | | | |
|---|---|---|---|---|---|---|

EMERGENCY ACTION LEVEL:

Degradation of both Division 1 and Division 2 critical DC voltage as indicated by bus voltage LT 110 VDC on both 125 V Dist. Panels S1-1 and S1-2 voltmeters (Bd. C) for GT 15 min.

BASES:

This Initiating Condition and its EAL recognize a loss of DC power compromising the ability to monitor and control the removal of decay heat during power operations, startup and hot shutdown conditions. It is intended to be anticipatory in that the operating crew may not have the necessary indication and control of equipment needed to respond to the loss. This EAL represents a more serious condition that than described in Unusual Event 6.2.U.1 in that the initial temperatures, pressures and available decay heat may be substantially higher than in Unusual Event 6.2.U.1 resulting in significantly less time available before failure of systems needed to protect the public.

Loss of all DC power compromises the ability to monitor and control plant safety functions. Prolonged loss of all DC power may result in core uncovery and loss of containment integrity when there is significant decay heat and residual heat in the reactor coolant system.

Credit is not taken in this EAL for the Division 3 DC bus because it only supplies control power to loads associated with the HPCS pump and not to any decay heat removal systems.

The WNP-2 battery sizing calculations for the 125 VDC batteries, S1-1 and S1-2, reveal that a worst case LOCA analysis would permit a 15 minute margin between 106.3 volts and 105.0 volts. However, a conservative value of one hundred ten (110) volts DC is used as a minimum bus voltage. It is based on providing a 15 minute margin of operation before bus voltage drops below 105 volts DC at which time bus loads cannot be guaranteed to function. One hundred ten volts was also selected based on instrument accuracy of ± 2% full scale or ± 3 volts and scale increments of 2 volts.

REFERENCE(S):

WNP-2 Technical Specifications

NUMARC NESP-007, Methodology for Development of Emergency Action Levels, Rev. 2, Site Area Emergency SS3

Engineering Calculation 2.05.01 (Battery Sizing Calc)

WNP-2 FSAR Section 8.3.2.1, Batteries

CVI 51A-00,8 Exide Manual

WNP-2 Plant Specific EAL Guideline, SS3.1

## 7 EQUIPMENT FAILURES

Numerous plant system related equipment failure events which warrant emergency classification, based upon their potential to pose actual or potential threats to plant safety, have been identified in this category.

The events of this category have been grouped into the following event types:

- System Failures: This subcategory includes conditions related to the failure of the plant to be brought to the required plant operating condition required by technical specifications and events which are indicative of a loss of ability to maintain the plant in cold shutdown.

- Control Room Evacuation: This category addresses losses of Control Room habitability and the ability to establish plant control from remote shutdown panels.

- Loss of Indication/Communications: Certain events which degrade the plant operators ability to effectively assess plant conditions or communicate with essential personnel within or external to the plant warrant emergency classification. Under this event type are losses of annunciators and/or communication equipment.

7 Equipment Failures 7.1 System Failures

7.1.U.1 Unusual Event

NUMARC IC: SU2 - Inability to reach required shutdown within technical specification limits.

APPLICABILITY:

| Operating Conditions | 1 | 2 | 3 | | | |
|---|---|---|---|---|---|---|

EMERGENCY ACTION LEVEL:

Plant is not brought to required operating mode within T.S. LCO action statement time

BASES:

Limiting Conditions of Operation (LCOs) require the plant to be brought to a required shutdown mode when the Technical Specification required configuration cannot be restored. Depending on the circumstances, this may or may not be an emergency or precursor to a more severe condition. In any case, the initiation of plant shutdown required by the Technical Specifications requires a one hour report under 10 CFR 50.72 (b) Non-emergency events. The plant is within its safety envelope when being shut down within the allowable action statement time in the Technical Specifications. An immediate Notification of Unusual Event is required when the plant is not brought to the required operating mode within the allowable action statement time in the Technical Specifications. Declaration of an Unusual Event is based on the time at which the LCO-specified action statement time period elapses under the site Technical Specifications and is not related to how long a condition may have existed. Other required Technical Specification shutdowns that involve precursors to more serious events are addressed by other categories of Initiating Conditions.

When a Limiting Condition is not met, and the associated ACTION requirement is not met within the required time allowed, the plant is not within its safety envelope and not within a T. S. LCO action statement time. Declaration of the Unusual Event should occur when Technical Specification action time elapses.

REFERENCE(S):

WNP-2 Technical Specifications

NUMARC NESP-007, Methodology for Development of Emergency Action Levels, Rev. 2, Unusual Event SU2

WNP-2 Plant Specific EAL Guideline, SU2.1

7 Equipment Failures 7.1 System Failures

7.1.U.2 Unusual Event

NUMARC IC: HU1 - Natural and destructive phenomena affecting the Protected Area Boundary.

APPLICABILITY:

| Operating Conditions | 1 | 2 | 3 | 4 | 5 | def |
|---|---|---|---|---|---|---|

EMERGENCY ACTION LEVEL:

Uncontrolled flooding in SSB (table 5) that has the potential to affect safety related equipment needed for the current operating mode.

BASES:

Declaration of this EAL identifies the occurrences of an event of sufficient magnitude to be of concern to the operating crew. This EAL addresses the effect of flooding caused by internal events such as component failures, equipment mis-alignment, or outage activity mishaps. The SSBs contain systems required for safe shutdown that are not designed to be wetted or submerged.

REFERENCE(S):

NUMARC NESP-007, Methodology for Development of Emergency Action Levels, final draft Rev. 3, Unusual Event HU1.6

7.1.A.1 Alert

NUMARC IC: SA3 - Inability to maintain plant in cold shutdown.

APPLICABILITY:

| Operating Conditions | | | | 4 | 5 | |
|---|---|---|---|---|---|---|

EMERGENCY ACTION LEVEL:

Inability to restore and maintain reactor coolant temp LT 200 °F

BASES:

This EAL addresses loss or degradation of functions required for core cooling during refueling and cold shutdown modes such that the technical specification limit cannot be maintained. Determination of "Inability to maintain" includes making an evaluation that considers both current and future system performance in relation to the current values and trends of relevant parameters. A momentary unplanned excursion above 200°F when adequate heat removal function is available is not intended to constitute an Alert.

REFERENCE(S):

WNP-2 Technical Specifications

NUMARC NESP-007, Methodology for Development of Emergency Action Levels, Rev. 2, Alert SA3

WNP-2 Plant Specific EAL Guideline, SA3.1

7.1.A.2 Alert

NUMARC IC: HA1 - Natural and destructive phenomena affecting Safe Shutdown Buildings.

APPLICABILITY:

| Operating Conditions | 1 | 2 | 3 | 4 | 5 | def |
|---|---|---|---|---|---|---|

EMERGENCY ACTION LEVEL:

Report by plant personnel confirming the occurrence of uncontrolled plant internal flooding in a safe shutdown building, Table 5
AND
Affected safe shutdown system parameters indicate degraded performance

BASES:

Flooding conditions within the plant affecting safe shutdown areas have the potential to directly impact the safe operation of the plant. The uncontrolled flooding event may pose a direct threat to safety-related equipment. As such, the potential exists for substantial degradation of the level of safety of the plant. Flooding is indicated by ECCS room level alarms on P601 and sump hi-hi alarms on P602.

This EAL is intended to address events that may have resulted in Safe Shutdown Buildings being subjected to forces beyond design limits and, thus, damage may be assumed to have occurred to safe shutdown systems. The initial "report" should not be interpreted as mandating a lengthy damage assessment prior to classification. No attempt is made in these EALs to assess the actual magnitude of the damage. Escalation to a higher emergency class, if appropriate, will be based on the specific system malfunctions, fission product barrier degradation, abnormal radiological releases, or Emergency Director judgment lCs.

For the purposes of this EAL, Safe Shutdown Buildings are considered to be the following locations:

- Vital portions of the RadWaste/Control Building
- Reactor Building
- Turbine Building
- Standby Service Water Pump Houses
- Diesel Generator Building
- Diesel Generator Fuel Oil Storage Area

This list was developed from equipment locations identified in FSAR Table 3.2-1, Seismic Category I. Equipment in Safe Shutdown Buildings is identified in FSAR Table 3.2-1, Seismic Category I.

REFERENCE(S):

NUMARC NESP-007, Methodology for Development of Emergency Action Levels, Rev. 2, Unusual Event HA1

WNP-2 Reactor Building 422 Area Flooding, PPM 4.12.4.10

FSAR Table 3.2-1

WNP-2 Plant Specific EAL Guideline, HA1.7

7.2.A.1 Alert

NUMARC IC: HA5 - Control room evacuation has been initiated.

APPLICABILITY:

| Operating Conditions | 1 | 2 | 3 | 4 | 5 | |
|---|---|---|---|---|---|---|

EMERGENCY ACTION LEVEL:

The decision to evacuate the Control Room has been made.

BASES:

The Alert condition addresses events which involve a substantial degradation of the level of safety of the plant. Frequently, a distinguishing characteristic of a "substantial degradation" is the need for increased monitoring of or assistance in monitoring plant functions. With the Control Room evacuated, additional support, monitoring and direction through the Technical Support Center and/or Operations Support Center is necessary. Therefore, an Alert should be declared when the Control Room must be evacuated.

An inability to establish plant control from outside the Control Room will escalate this event to a Site Area Emergency.

REFERENCE(S):

WNP-2 Control Room Evacuation and Remote Cooldown, PPM 4.12.1.1

NUMARC/NESP-007, Methodology for Development of Emergency Action Levels, Rev. 2, Alert HA5

WNP-2 Plant Specific EAL Guideline, HA5.1

7.2.S.1 Site Area Emergency

NUMARC IC: HS2 - Control room evacuation has been initiated, but plant control CANNOT be established.

APPLICABILITY:

| Operating Conditions | 1 | 2 | 3 | 4 | 5 | |
|---|---|---|---|---|---|---|

EMERGENCY ACTION LEVEL:

CR evacuation initiated
AND
Control of plant equipment needed to maintain adequate core cooling cannot be established at either the Remote Shutdown Panel or Alternate Remote Shutdown panel within 15 min. of the SRO in charge of the CR physically leaving the CR

BASES:

This Initiating Condition and its associated EAL address a condition where evacuation of the Control Room is necessary but expeditious transfer of safety systems has not occurred. Fission product barrier damage may not yet be indicated. A 15 minute transfer time was chosen for control to be reestablished to ensure that core uncovery with subsequent core damage does not occur and is consistent with NUMARC methodology.

Escalation of this event, if appropriate, would be by Fission Product Barrier Degradation, Abnormal Rad Levels/Radiological Effluent, or Emergency Director Judgment Initiating Conditions.

REFERENCE(S):

NUMARC/NESP-007, Methodology for Development of Emergency Action Levels, Rev. 2, Site Area Emergency HS2

WNP-2 Control Room Evacuation and Remote Cooldown, PPM 4.12.1.1

WNP-2 Plant Specific EAL Guideline, HS2.1

7.3.U.1 Unusual Event

NUMARC IC: SU3 - Unplanned loss of most or all safety system annunciators or indication in the control room for greater than 15 minutes.

APPLICABILITY:

| Operating Conditions | 1 | 2 | 3 | | | |
|---|---|---|---|---|---|---|

EMERGENCY ACTION LEVEL:

Unplanned loss of most or all annunciators on P601, P602, P603, and Bd. C associated with safety-related equipment GT 15 minutes

BASES:

This Initiating Condition and its associated EAL recognize the difficulty associated with monitoring plant conditions without the use of a major portion of the annunciation equipment.

Quantification of "most" is left to the Emergency Director. It is not intended that plant personnel perform a detailed count of the instrumentation lost but rather make a judgment call with approximately 75% being the threshold. It is estimated that if approximately 75% of the annunciators are lost, there is an increased risk that a degraded plant condition could go undetected.

Control Room panels with annunciators for safety-related equipment required for off normal or emergency plan response include:

- P601
- P602
- P603
- Electrical Distribution on Bd C

Indications are available at other locations including Control Room back panels, using them to safely operate the plant would require increased surveillance.

Plant design provides redundant safety system indication powered from separate uninterruptible power supplies. While failure of a large portion of annunciators is more likely than a failure of a large portion of indications, the concern is included in this EAL due to difficulty associated with assessment of plant conditions. The loss of specific, or several, safety system indicators should remain a function of that specific system or component operability status. This will be addressed by the specific Technical Specification. The initiation of a Technical Specification- imposed plant shutdown related to the instrument loss will be reported via 10 CFR 50.72. If the shutdown is not in compliance with the Technical Specification Action Statement, the Unusual Event is based on 7.1.U.1, "Inability to Reach Required Shutdown Within Technical Specification Limits".

Compensatory nonalarming indications include the Process Computers and the Graphic Display System (GDS). It may include other permanently or temporarily installed monitoring systems if they allow the plant operators to compensate for the failed indications.

Fifteen minutes was selected as a threshold to exclude transitory or momentary power losses.

No Initiating Condition is indicated during cold shutdown and refueling due to the limited number of safety systems required for operation.

This event should be escalated to Alert 7.3.A.1 if a transient is in progress or the compensatory indications become unavailable.

REFERENCE(S):

NUMARC/NESP-007, Methodology for Development of Emergency Action Levels, Rev. 2, Unusual Event SU3

WNP-2 Technical Specifications

WNP-2 Plant Specific EAL Guideline, SU3.1

7.3.U.2 Unusual Event

NUMARC IC: SU6 - Significant loss of onsite or offsite communications capabilities.

APPLICABILITY:

| Operating Conditions | 1 | 2 | 3 | 4 | 5 | def |
|---|---|---|---|---|---|---|

EMERGENCY ACTION LEVEL:

Unplanned loss of ALL of the following onsite communications capability:

- Plant Public Address (PA) System
- Plant Telephone System
- Plant Radio System Operations and Security Channels

BASES:

This Initiating Condition and its associated EALs recognize a loss of communications capability that significantly degrades the Plant Operations staff's ability to perform tasks necessary for plant operations or the ability to communicate with offsite authorities.

REFERENCE(S):

NUMARC/NESP-007, Methodology for Development of Emergency Action Levels, Rev. 2, Unusual Event SU6

WNP-2 Plant Specific EAL Guideline, SU6.1

7.3.U.3 Unusual Event

NUMARC IC: SU6 - Significant loss of onsite or offsite communications capabilities.

APPLICABILITY:

| Operating Conditions | 1 | 2 | 3 | 4 | 5 | def |
|---|---|---|---|---|---|---|

EMERGENCY ACTION LEVEL:

Unplanned loss of ALL of the following offsite communications capability:

- State/County Notification (Crash) System
- Offsite calling capability from the Control Room via direct telephone and fax lines
- Long distance calling capability on the Plant ("2000") Switch and Plant Support Facility/Plant Engineering Center ("8000") Switch

BASES:

This Initiating Condition and its associated EALs recognize a loss of communications capability that significantly degrades the Plant Operations staff's ability to perform tasks necessary for plant operations or the ability to communicate with offsite authorities. The loss of offsite communications capability is more comprehensive than that addressed by 10 CFR 50.72.

Long distance capability may be confirmed by placing a direct long distance call from both the 2000 and 8000 switches.

REFERENCE(S):

NUMARC/NESP-007, Methodology for Development of Emergency Action Levels, Rev. 2, Unusual Event SU6

WNP-2 Plant Specific EAL Guideline, SU6.1

7.3.A.1 Alert

NUMARC IC: SA4 - Unplanned loss of most or all safety system annunciators or indications in the control room with EITHER: 1) a significant transient in progress; OR 2) Compensatory nonalarming indicators are unavailable.

APPLICABILITY:

| Operating Conditions | 1 | 2 | 3 | | | |
|---|---|---|---|---|---|---|

EMERGENCY ACTION LEVEL:

Unplanned loss of most or all annunciators on P601, P602, P603, and Bd C associated with safety-related equipment GT 15 min.
AND either of the following:
A significant plant transient is in progress
OR
Compensatory non alarming indications are not available (plant computer systems and GDS)

BASES:

This Initiating Condition and its associated EAL recognize the difficulty associated with monitoring plant conditions without the use of a major portion of the annunciation equipment. It represents an increase in severity above that described in Unusual Event 7.3.U.1 in that either compensatory indications are not available or a significant transient is in progress.

Quantification of "most" is left to the Emergency Director. It is not intended that plant personnel perform a detailed count of the annunciation lost but, rather, make a judgment call with approximately 75% being the threshold. It is estimated that if approximately 75% of the annunciators are lost, there is an increased risk that a degraded plant condition could go undetected.

Control Room panels with annunciators and indicators for safety-related equipment for off normal or emergency plan response include:

- P601
- P602
- P603
- Electrical Distribution on Bd C

Indications are available at other locations including Control Room back panels. However, using them to safely operate the plant would require increased surveillance.

Plant design provides redundant safety system indication powered from separate uninterruptible power supplies. While failure of a large portion of annunciators is more likely than a failure of a large portion of indications, the concern is included in this EAL due to difficulty associated with assessment of plant conditions. The loss of specific, or several, safety system indicators should remain a function of that specific system or component operability status. This will be addressed by the specific Technical Specification. The initiation of a Technical Specification-imposed plant shutdown related to the instrument loss will be reported via 10 CFR 50.72. If the shutdown is not in compliance with the Technical Specification action statement, the Unusual Event is based on AU1, "Inability to Reach Required Shutdown Within Technical Specification Limits".

Compensatory nonalarming indications include the Process Computer Systems. It may include other permanently or temporarily installed monitoring systems if they allow the plant operators to compensate for the failed indications.

Fifteen minutes was selected as a threshold to exclude transient or momentary power losses.

A "significant transient" includes response to automatic or manually initiated functions such as scrams, runbacks involving greater than 25% thermal power change, ECCS injection, or thermal power oscillations of 10% or greater.

No Initiating Condition is indicated during cold shutdown or refueling due to the limited number of safety systems required for operation.

This event should be escalated to Site Area Emergency 7.3.S.1 if the operating crew cannot monitor a transient in progress.

REFERENCE(S):

NUMARC/NESP-007, Methodology for Development of Emergency Action Levels, Rev. 2, Alert SA4

WNP-2 Technical Specifications

WNP-2 Plant Specific EAL Guideline, SA4.1

7 Equipment Failures 7.3 Loss of Indication/Communications

7.3.S.1 Site Area Emergency

NUMARC IC: SS6 - Inability to monitor a significant transient in progress.

APPLICABILITY:

| Operating Conditions | 1 | 2 | 3 | | | |
|---|---|---|---|---|---|---|

EMERGENCY ACTION LEVEL:

Loss of most or all annunciators on P601, P602, P603 and Bd. C associated with safety-related equipment

AND

Compensatory non-alarming indications are unavailable (process computer system and GDS)

AND

Significant transient in progress

AND

Loss of indications needed to monitor ANY of the following plant critical safety parameters:

- Reactor power
- RPV level
- RPV pressure
- Drywell pressure
- Drywell temperature
- Wetwell pressure
- Wetwell/Drywell H2/O2 Concentrations
- Wetwell level
- Wetwell temperature
- Radioactive Gaseous Effluents

BASES:

This Initiating Condition and its associated EAL recognize the inability of the Control Room staff to monitor plant response to a transient. A Site Area Emergency is considered to exist if the Control Room staff cannot monitor the critical safety functions needed for protection of the public.

Critical safety functions include those plant parameters and functions that allow the plant operators to verify they have a coolable core geometry, that core cooling is maintained, and that containment is intact. The WNP-2 Safety Analysis Report states that the safety functions include:

1. The accommodation of abnormal operational transients and postulated design basis accidents;

2. The maintenance of containment integrity;

3. The assurance of Emergency Core Cooling; and

4. The continuance of reactor coolant pressure boundary integrity.

Compensatory nonalarming indications include the Process Computer Systems. It may include other permanently or temporarily installed monitoring systems if they allow the plant operators to compensate for the failed indications.

A "significant transient" includes response to automatic or manually initiated functions such as scrams, runbacks involving greater than 25% thermal power change, ECCs injection, or thermal power oscillations of 10% or greater.

REFERENCE(S):

NUMARC/NESP-007, Methodology for Development of Emergency Action Levels, Rev. 2, Alert SS6

WNP-2 Technical Specifications

WNP-2 Plant Specific EAL Guideline, SS6.1

## 8 Hazards

Hazards are those nonplant system-related events which can directly or indirectly impact plant operation or reactor plant and personnel safety.

The events of this category have been grouped into the following types:

- Security Threats: This category includes unauthorized entry attempts into the Protected Area as well as bomb threats and sabotage attempts. Also addressed are actual security compromises threatening loss of physical control of the plant.

- Fire or Explosion: Fires can pose significant hazards to personnel and reactor safety. Appropriate for classification are fires within the site Protected Area or which may affect operability of vital equipment.

- Man-made Events: Man-made events are those nonnaturally occurring events which can cause damage to plant facilities such as aircraft crashes, missile impacts, toxic or flammable gas leaks or explosions from whatever source.

- Natural Events: Events such as hurricanes, earthquakes or tornadoes which have potential to cause damage to plant structures or equipment significant enough to threaten personnel or plant safety.

8.1.U.1 Unusual Event

NUMARC IC: HU4 - Confirmed security event which indicates a potential degradation in the level of safety of the plant.

APPLICABILITY:

| Operating Conditions | 1 | 2 | 3 | 4 | 5 | def |
|---|---|---|---|---|---|---|

EMERGENCY ACTION LEVEL:

Bomb device discovered within Plant Protected Area <u>but</u> outside a Safe Shutdown Building, Table 5
OR
Confirmed report of an attempted entry, sabotage or security threat that cannot be properly compensated for within 10 minutes

BASES:

Events which are believed by the Emergency Director to indicate a potential degradation of the level of safety of the plant should be declared an Unusual Event.

Security events which do not represent at least a potential degradation in this level of safety of the plant are reported under 10 CFR 73.71 or, in some cases, 10 CFR 50.72.

The 10 minute criteria to compensate is derived from regulatory guidance on implementation of 10 CFR 73.71, Reporting of Security Events.

For the purposes of this EAL, Safe Shutdown Buildings are considered to be the following locations:

- Vital portions of the RadWaste/Control Building
- Reactor Building
- Turbine Building
- Standby Service Water Pump Houses
- Diesel Generator Building
- Diesel Generator Fuel Oil Storage Area

This list was developed from equipment locations identified in FSAR Table 3.2-1, Seismic Category I.

REFERENCE(S):

WNP-2 Safeguards Contingency Plan

NUMARC/NESP-007, Methodology for Development of Emergency Actions Levels, Rev. 2, Unusual Event HU4

FSAR Table 3.2-1

WNP-2 Plant Specific EAL Guideline, HU4.1

8.1.A.1 Alert

NUMARC IC: HA4 - Security event in a Plant Protected Area.

APPLICABILITY:

| Operating Conditions | 1 | 2 | 3 | 4 | 5 | def |
|---|---|---|---|---|---|---|

EMERGENCY ACTION LEVEL:

Confirmed report of an intrusion by a hostile force into the Plant Protected Area

BASES:

This class of security events represents an escalated threat to plant safety above that contained in the Unusual event. For the purpose of this Initiating Condition, a civil disturbance which penetrates the Protected Area Boundary as well as an individual or group of individuals with known or suspected malicious intent is considered a hostile force.

Intrusion into a Safe Shutdown Building by a hostile force as defined in Site Area Emergency NS1 will escalate this event to Site Area Emergency.

REFERENCE(S):

WNP-2 Safeguards Contingency Plan

NUMARC/NESP-007, Methodology for Development of Emergency Actions Levels, Rev. 2, Unusual Event HA4

WNP-2 Plant Specific EAL Guideline, HA4.1

8.1.S.1 Site Area Emergency

NUMARC IC: HS1 - Security event in a Plant Vital Area.

APPLICABILITY:

| Operating Conditions | 1 | 2 | 3 | 4 | 5 | def |
|---|---|---|---|---|---|---|

EMERGENCY ACTION LEVEL:

Bomb device discovered or detonated within a Safe Shutdown Building, Table 5
OR
Confirmed report of intrusion by a hostile force into a Safe Shutdown Building, Table 5

BASES:

This class of security event represents an escalated threat to plant safety above that contained in Alert 8.1.A.1 in that a hostile force has progressed from the Protected Area to a Safe Shutdown Building.

For the purposes of this EAL, Safe Shutdown Buildings are considered to be the following locations:

- Vital portions of the RadWaste/Control Building
- Reactor Building
- Turbine Building
- Standby Service Water Pump Houses
- Diesel Generator Building
- Diesel Generator Fuel Oil Storage Area

This list was developed from equipment locations identified in FSAR Table 3.2-1, Seismic Category I.

For the purposes of this EAL, a civil disturbance which penetrates the Protected Area Boundary as well as an individual or group of individuals with known or suspected malicious intent can be considered a hostile force.

REFERENCE(S):

WNP-2 Safeguards Contingency Plan

NUMARC/NESP-007, Methodology for Development of Emergency Actions Levels, Rev. 2, Unusual Event HS1

FSAR Table 3.2-1

WNP-2 Plant Specific EAL Guideline, HS1.1, HS1.2

8.1.G.1 General Emergency

NUMARC IC: HG1 - Security event resulting in loss of ability to reach and maintain cold shutdown.

APPLICABILITY:

| Operating Conditions | 1 | 2 | 3 | 4 | 5 | def |
|---|---|---|---|---|---|---|

EMERGENCY ACTION LEVEL:

Loss of physical control of the CR due to security event
OR
Loss of physical control of the remote shutdown capability due to security event

BASES:

This Initiating Condition encompasses conditions under which a hostile force has taken physical control of areas required to reach and maintain cold shutdown.

For the purpose of this EAL, a civil disturbance which penetrates the Protected Area Boundary as well as an individual or group of individuals with known or suspected malicious intent is considered a hostile force.

REFERENCE(S):

WNP-2 Safeguards Contingency Plan

NUMARC/NESP-007, Methodology for Development of Emergency Actions Levels, Rev. 2, Unusual Event HG1

WNP-2 Plant Specific EAL Guideline, HG1.1, HG1.2

8.2.U.1 Unusual Event

NUMARC IC: HU2 - Fire within the Protected Area Boundary not extinguished within 15 minutes of detection or an explosion within Protected Area Boundary.

APPLICABILITY:

| Operating Conditions | 1 | 2 | 3 | 4 | 5 | def |
|---|---|---|---|---|---|---|

EMERGENCY ACTION LEVEL:

Fire within or adjacent to any Safe Shutdown Building, Table 5, which is not extinguished within 15 minutes of either CR notification by plant personnel or validation of alarm

OR

Report by plant personnel of an unplanned explosion within the Protected Area Boundary resulting in visible damage to permanent structures or equipment

BASES:

This Initiating Condition and its associated EAL address fires that are of sufficient magnitude that they may be potentially significant precursors to damage to safety systems. This excludes items such as fires within administrative buildings or other structures not contiguous with a safe shutdown building, and other fires of no safety consequence or threat to a safe shutdown building.

An alarm can be shown to be valid by multiple/redundant indications such as alarms on FCP-1 or FCP-2, fire pumps starting, fire water header pressure fluctuations or by notification by plant personnel. If an alarm must be verified by dispatching an individual to the scene, the 15 minute clock starts at the time of the alarm.

If an inspection of the area is completed within 15 minutes with no evidence of a fire (spurious alarm), no declaration need be made.

No attempt is made to assess the magnitude of the damage. The occurrence of the explosion with reports of damage (deformation/scorching) is sufficient for declaration.

Any security aspects of this event should be considered under Event Category 8.1, "Security Threats". If structural or equipment damage occurs within areas housing safe shutdown equipment and functions, the event may be escalated to Alert, 8.2.A.1.

For the purposes of this EAL, Safe Shutdown Buildings are considered to be the following locations:

- Vital portions of the RadWaste/Control Building
- Reactor Building
- Turbine Building
- Standby Service Water Pump Houses
- Diesel Generator Building
- Diesel Generator Fuel Oil Storage Area

This list was developed from equipment locations identified in FSAR Table 3.2-1, Seismic Category I. Equipment in Safe Shutdown Buildings is identified in FSAR Table 3.2-1, Seismic Category I.

REFERENCE(S):

Title 10 of the Code of Federal Regulations, Part 50, Domestic Licensing of Production and Utilization Facilities, Appendix R, Fire Protection Program for Nuclear Power Facilities

NUMARC NESP-007, Methodology for Development of Emergency Action Levels, Rev. 2, Unusual Event HU2

FSAR Table 3.2-1

WNP-2 Plant Specific EAL Guideline, HU2.1

8.2.A.1 Alert

NUMARC IC: HA2 - Fire or explosion affecting the operability of plant safety systems required to establish or maintain safe shutdown.

APPLICABILITY:

| Operating Conditions | 1 | 2 | 3 | 4 | 5 | def |
|---|---|---|---|---|---|---|

EMERGENCY ACTION LEVEL:

Confirmed fire or explosion in a safe shutdown building, Table 5
AND either of the following:
Affected safe shutdown system parameters indicate degraded performance
OR
Report by plant personnel of visible damage to the affected safe shutdown building or equipment contained within the affected safe shutdown building

BASES:

As used here, an explosion is a rapid, violent, unconfined combustion or catastrophic failure of pressurized equipment, that potentially imparts significant energy to near-by structures and materials. The inclusion of a "report of visible damage" should not be interpreted as mandating a lengthy damage assessment prior to classification. No attempt is made in this EAL to assess the actual magnitude of the damage. The occurrence of the explosion with reports of evidence of damage (e.g., deformation, scorching) is sufficient for declaration.

It is important to note that this EAL addresses a fire and not the degradation in performance of affected systems. The reference to damage of systems is used to identify the magnitude of the fire and to discriminate against minor fires. The reference to Safe Shutdown Buildings is included to discriminate against fires in areas having a low probability of affecting safe operation. The significance here is not that a safety system was degraded but the fact that the fire was large enough to cause damage to these systems.

For the purposes of this EAL, Safe Shutdown Buildings are considered to be the following locations:

- Vital portions of the RadWaste/Control Building
- Reactor Building
- Turbine Building
- Standby Service Water Pump Houses
- Diesel Generator Building
- Diesel Generator Fuel Oil Storage Area

This list was developed from equipment locations identified in FSAR Table 3.2-1, Seismic Category I. Equipment in Safe Shutdown Buildings is identified in FSAR Table 3.2-1, Seismic Category I.

REFERENCE(S):

Title 10 of the Code of Federal Regulations, Part 50, Domestic Licensing of Production and Utilization Facilities, Appendix R, Fire Protection Program for Nuclear Power Facilities

NUMARC NESP-007, Methodology for Development of Emergency Action Levels, Rev. 2, Unusual Event HA2

PPM 4.12.1.1, Control Room Evacuation and Remote Cooldown

FSAR Appendix F, Fire Safety Evaluation

WNP-2 Plant Specific EAL Guideline, HA2.1

8.3.U.1 Unusual Event

NUMARC IC: HU1 - Natural and destructive phenomena affecting the Protected Area Boundary.

APPLICABILITY:

| Operating Conditions | 1 | 2 | 3 | 4 | 5 | def |
|---|---|---|---|---|---|---|

EMERGENCY ACTION LEVEL:

Vehicle crash into or projectile which impacts a Safe Shutdown Building, Table 5

BASES:

This EAL addresses such items as plane, helicopter, train, car, truck, or barge crash, or impact of other projectiles that may potentially damage plant structures containing functions and systems required for safe shutdown of the plant. The impact is of such force that damage to structures or equipment inside a Safe Shutdown Building may have occurred. If the crash is confirmed to affect equipment in a Safe Shutdown Building, the event may be escalated to Alert.

For the purposes of this EAL, Safe Shutdown Buildings are considered to be the following locations:

- Vital portions of the RadWaste/Control Building
- Reactor Building
- Turbine Building
- Standby Service Water Pump Houses
- Diesel Generator Building
- Diesel Generator Fuel Oil Storage Area

This list was developed from equipment locations identified in FSAR Table 3.2-1, Seismic Category I. Equipment in Safe Shutdown Buildings is identified in FSAR Table 3.2-1, Seismic Category I.

REFERENCE(S):

NUMARC NESP-007, Methodology for Development of Emergency Action Levels, Rev. 2, Unusual Event HU1

WNP-2 Plant Specific EAL Guideline, HU1.4

8.3.U.2 Unusual Event

NUMARC IC: HU1 - Natural and destructive phenomena affecting the Protected Area Boundary.

APPLICABILITY:

| Operating Conditions | 1 | 2 | 3 | | | |
|---|---|---|---|---|---|---|

EMERGENCY ACTION LEVEL:

Turbine failure resulting in casing penetration or damage to turbine or generator seals

BASES:

Turbine failure with casing penetration or seal failure increases the potential for leakage of combustible fluids (oils and gas).

REFERENCE(S):

NUMARC NESP-007, Methodology for Development of Emergency Action Levels, Rev. 2, Unusual Event HU1

WNP-2 Plant Specific EAL Guideline, HU1.6

8.3.U.3 Unusual Event

NUMARC IC: HU3 - Release of toxic or flammable gases affecting the Protected Area Boundary deemed detrimental to safe operation of the plant.

APPLICABILITY:

| Operating Conditions | 1 | 2 | 3 | 4 | 5 | def |
|---|---|---|---|---|---|---|

EMERGENCY ACTION LEVEL:

Report or detection of toxic or flammable gases that could enter or have entered within the Protected Area Boundary in amounts that could affect the health of plant personnel or safe plant operation

OR

Report by local, county or state officials for evacuation or shelter of site personnel based on offsite event

BASES:

This Initiating Condition and its associated EALs are based on releases in concentrations within the Protected Area Boundary that may affect the health of plant personnel or the safe operation of the plant. This includes releases that originate onsite as well as releases that originate offsite but threaten onsite areas.

A toxic gas is considered to be any gas that is dangerous to life or limb by reason of inhalation or skin contact.

A combustible gas, if maintained at a concentration lower than the Lower Explosive Limit (LEL), will not explode due to ignition.

REFERENCE(S):

NUMARC NESP-007, Methodology for Development of Emergency Action Levels, Rev. 2, Unusual Event HU3

WNP-2 Plant Specific EAL Guideline, HU3.1

8.3.A.1 Alert

NUMARC IC: HA1 - Natural and destructive phenomena affecting Safe Shutdown Buildings.

APPLICABILITY:

| Operating Conditions | 1 | 2 | 3 | 4 | 5 | def |
|---|---|---|---|---|---|---|

EMERGENCY ACTION LEVEL:

Vehicle crash or projectile impact which impedes access to or damages equipment in a Safe Shutdown Building, Table 5

BASES:

This EAL addresses such items as plane, helicopter, train, car, truck, or barge crash, or impact of other projectiles that may affect plant structures containing functions and systems required for safe shutdown of the plant. If the crash is confirmed to affect equipment in a Safe Shutdown Building, then the event is an Alert.

This EAL is intended to address events that may have resulted in Safe Shutdown Buildings being subjected to forces beyond design limits and, thus, damage may be assumed to have occurred to safe shutdown systems. The initial "report" should not be interpreted as mandating a lengthy damage assessment prior to classification. No attempt is made in these EALs to assess the actual magnitude of the damage. Escalation to a higher emergency class, if appropriate, will be based on the specific system malfunctions, fission product barrier degradation, abnormal radiological releases, or Emergency Director judgment EALs.

For the purposes of this EAL, Safe Shutdown Buildings are considered to be the following locations:

- Vital portions of the RadWaste/Control Building
- Reactor Building
- Turbine Building
- Standby Service Water Pump Houses
- Diesel Generator Building
- Diesel Generator Fuel Oil Storage Area

This list was developed from equipment locations identified in FSAR Table 3.2-1, Seismic Category I. Equipment in Safe Shutdown Buildings is identified in FSAR Table 3.2-1, Seismic Category I.

REFERENCE(S):

NUMARC NESP-007, Methodology for Development of Emergency Action Levels, Rev. 2, Unusual Event HA1

FSAR Table 3.2-1

WNP-2 Plant Specific EAL Guideline, HA1.5

8.3.A.2 Alert

NUMARC IC: HA1 - Natural and destructive phenomena affecting Safe Shutdown Buildings.

APPLICABILITY:

| Operating Conditions | 1 | 2 | 3 | | | |
|---|---|---|---|---|---|---|

EMERGENCY ACTION LEVEL:

Missiles generated from a turbine failure have resulted in visible structural damage to or penetration of a safe shutdown building, Table 5

BASES:

Turbine causing penetration, caused by failure of turbine rotating components, can result in missiles (blading, pieces of diaphragm, etc.) being hurled through the casing penetrations with such force, they can penetrate the turbine and come to rest a significant distance away. These turbine-generated missiles pose a threat to safety-related equipment if they cause visible structural damage to, or if they penetrate, Safe Shutdown Buildings.

This EAL is intended to address events that may have resulted in Safe Shutdown Buildings being subjected to forces beyond design limits and, thus, damage may be assumed to have occurred to safe shutdown systems. The initial "report" should not be interpreted as mandating a lengthy damage assessment prior to classification. No attempt is made in these EALs to assess the actual magnitude of the damage. Escalation to a higher emergency class, if appropriate, will be based on the specific system malfunctions, fission product barrier degradation, abnormal radiological releases, or Emergency Director judgment EALs.

For the purposes of this EAL, Safe Shutdown Buildings are considered to be the following locations:

- Vital portions of the RadWaste/Control Building
- Reactor Building
- Turbine Building
- Standby Service Water Pump Houses
- Diesel Generator Building
- Diesel Generator Fuel Oil Storage Area

This list was developed from equipment locations identified in FSAR Table 3.2-1, Seismic Category I. Equipment in Safe Shutdown Buildings is identified in FSAR Table 3.2-1, Seismic Category I.

REFERENCE(S):

NUMARC NESP-007, Methodology for Development of Emergency Action Levels, Rev. 2, Unusual Event HA1

FSAR Table 3.2-1

WNP-2 Plant Specific EAL Guideline, HA1.6

8.3.A.3 Alert

NUMARC IC: HA3 - Release of toxic or flammable gases within a facility structure which jeopardizes operation of systems required to maintain safe operations or to establish or maintain cold shutdown.

APPLICABILITY:

| Operating Conditions | 1 | 2 | 3 | 4 | 5 | def |
|---|---|---|---|---|---|---|

EMERGENCY ACTION LEVEL:

Report or detection of toxic or flammable gases within a safe shutdown building, Table 5, in concentrations that will be life threatening to plant personnel or impede access to equipment needed for safe plant operation

BASES:

This EAL is based on gases that have entered a plant structure impeding access to equipment necessary for the safe operation of the plant. This EAL applies to Safe Shutdown Buildings and areas contiguous to plant vital areas or other significant buildings or areas. The intent of this EAL is not to include buildings (i.e., warehouses) or other areas that are not contiguous or immediately adjacent to plant vital areas or Safe Shutdown Buildings. It is appropriate that increased monitoring be done to ascertain whether consequential damage has occurred.

For the purposes of this EAL, Safe Shutdown Buildings are considered to be the following locations:

- Vital portions of the RadWaste/Control Building
- Reactor Building
- Turbine Building
- Standby Service Water Pump Houses
- Diesel Generator Building
- Diesel Generator Fuel Oil Storage Area

This list was developed from equipment locations identified in FSAR Table 3.2-1, Seismic Category I. Equipment in Safe Shutdown Buildings is identified in FSAR Table 3.2-1, Seismic Category I.

REFERENCE(S):

NUMARC NESP-007, Methodology for Development of Emergency Action Levels, Rev. 2, Unusual Event HA3

FSAR Table 3.2-1

WNP-2 Plant Specific EAL Guideline, HA3.1, HA3.2

8.4.U.1 Unusual Event

NUMARC IC: HU1 - Natural and destructive phenomena affecting the Protected Area Boundary.

APPLICABILITY:

| Operating Conditions | 1 | 2 | 3 | 4 | 5 | def |
|---|---|---|---|---|---|---|

EMERGENCY ACTION LEVEL:

MINIMUM SEISMIC EARTHQUAKE alarm (H13-P851-S1-2.5)
AND
CR receives report from plant personnel who have felt an earthquake

BASES:

The method of detection associated with an earthquake of this intensity is based on the condition for a "felt earthquake" as defined in the EPRI-sponsored "Guidelines for, Nuclear Plant Response to an Earthquake". These methods include the activation of seismic monitoring instrumentation as evidenced by a valid alarm on P851-S1-2.5, "MINIMUM SEISMIC EARTHQUAKE EXCEEDED" along with confirmation from plant personnel who have physically felt the ground motion and recognize the event as an earthquake. An earthquake of this magnitude may be sufficient to cause some minor damage to plant structures or equipment within the Protected Area. Damage is considered to be minor since it does not affect physical or structural integrity. The event is not expected to affect the capabilities of plant safety functions. Due to the unpredictable nature of earthquakes, this may be a precursor to a more serious event and, therefore, represents a potential degradation in the level of safety of the plant.

REFERENCE(S):

NUMARC NESP-007, Methodology for Development of Emergency Action Levels, Rev. 2, Unusual Event HU1

EPRI Guidelines for Nuclear Plant Response to an Earthquake

8.4.U.2 Unusual Event

NUMARC IC: HU1 - Natural and destructive phenomena affecting the Protected Area Boundary.

APPLICABILITY:

| Operating Conditions | 1 | 2 | 3 | 4 | 5 | def |
|---|---|---|---|---|---|---|

EMERGENCY ACTION LEVEL:

Weather Service projected winds GT 80 mph
OR
CR measured winds GT 66 mph (5 minute average at 33 ft)
OR
Report by plant personnel confirming the occurrence of a tornado striking within the Protected Area Boundary

BASES:

This event is a natural and potentially destructive phenomena that may accompany certain events such as a tornado or hurricane. These sustained high winds may also be produced by unstable weather conditions. However this event occurs, it may be a precursor to a more serious event and, therefore, represents a potential degradation in the level of safety of the plant.

A tornado touching down within the Protected Area is an observed event with the potential to cause damage to structures containing systems or functions necessary for the safe shutdown of the plant. As such, the occurrence of a tornado strike represents a potential degradation in the level of safety of the plant. If structural damage is confirmed, this event would be escalated to Alert 8.4.A.2. If it is determined that the occurrence of the tornado strike has either affected or caused the loss of shutdown cooling functions, then the consequences of the event are assessed under event category 7.1, "System Failures". The event may then be escalated via this category if appropriate.

REFERENCE(S):

NUMARC NESP-007, Methodology for Development of Emergency Action Levels, Rev. 2, Unusual Event HU1

WNP-2 Tornado/High Winds, PPM 4.12.4.8

WNP-2 Plant Specific EAL Guideline, HU1.1

8.4.U.3 Unusual Event

NUMARC IC: HU1 - Natural and destructive phenomena affecting the Protected Area Boundary.

APPLICABILITY:

| Operating Conditions | 1 | 2 | 3 | 4 | 5 | def |
|---|---|---|---|---|---|---|

EMERGENCY ACTION LEVEL:

Range fires near the plant which threaten to reduce the level of safety

BASES:

WNP-2 is located on a dry land steppe. Range fires routinely occur in this type of environment. This event has the potential to affect or cause the loss of safe shutdown systems and functions and, therefore, may be a precursor to a more serious event.

REFERENCE(S):

NUMARC NESP-007, Methodology for Development of Emergency Action Levels, Rev. 2, Unusual Event HU1

WNP-2 Plant Specific EAL Guideline, HU1.3

8.4.U.4 Unusual Event

NUMARC IC: HU1 - Natural and destructive phenomena affecting the Protected Area Boundary.

APPLICABILITY:

| Operating Conditions | 1 | 2 | 3 | 4 | 5 | def |
|---|---|---|---|---|---|---|

EMERGENCY ACTION LEVEL:

Visible ash fallout from volcanic activity

BASES:

In May of 1980, Mount St. Helens volcano erupted. Prevailing winds spread up to 1/4″ of volcanic ash on the WNP-2 site, with much heavier concentrations of ash several miles north of the site. Ash can clog diesel-generator air intakes and can be highly abrasive to rotating machinery. This event represents a potential degradation in the level of safety of the plant.

REFERENCE(S):

NUMARC NESP-007, Methodology for Development of Emergency Action Levels, Rev. 2, Unusual Event HU1

WNP-2 Design Basis Ash Fallout, PPM 4.12.4.5

WNP-2 Plant Specific EAL Guideline, HU1.3

8.4.U.5 Unusual Event

NUMARC IC: HU1 - Natural and destructive phenomena affecting the Protected Area Boundary.

APPLICABILITY:

| Operating Conditions | 1 | 2 | 3 | 4 | 5 | def |
|---|---|---|---|---|---|---|

EMERGENCY ACTION LEVEL:

River level increase which threatens to flood the river pumphouse

BASES:

The WNP-2 station is located on an elevated plateau, well removed from risk of flooding by the Columbia River. The river pumphouse, located lower and closer to the river, may be prone to flooding. Should the river pumphouse be lost, the Standby Service Water Ultimate Heat Sink spray ponds have a 30 day supply of water. However, loss of the river pumphouse is deemed a potential degradation in the level of safety of the plant. The first Control Room indication of river pumphouse flooding would be TMU-LI-7 off-scale high.

REFERENCE(S):

NUMARC NESP-007, Methodology for Development of Emergency Action Levels, Rev. 2, Unusual Event HU1

WNP-P Flood, PPM 4.12.4.2

WNP-2 Plant Specific EAL Guideline, HU1.7

8.4.A.1 Alert

NUMARC IC: HA1 - Natural and destructive phenomena affecting Safe Shutdown Buildings.

APPLICABILITY:

| Operating Conditions | 1 | 2 | 3 | 4 | 5 | def |
|---|---|---|---|---|---|---|

EMERGENCY ACTION LEVEL:

OPERATING BASIS EARTHQUAKE alarm (H13-P851-S1-5.1)
AND
CR receives report from plant personnel who have felt an earthquake

BASES:

An earthquake that exceeds the OBE level is beyond the design basis limits for the plant as specified in the Safety Analysis Report, Section 3.7, Seismic Design. A seismic event of this magnitude can cause damage to safety-related systems and functions. Detection of this event includes activation of seismic monitoring instrumentation as evidenced by a valid alarm on P851-S1-5.1, "OPERATING BASIS EARTHQUAKE EXCEEDED" along with confirmation from plant personnel who have physically felt the associated ground motion. An evaluation along with a thorough inspection of plant areas and systems will be used to determine the extent of plant damage and will provide the necessary information to determine if escalation to a higher emergency classification is required.

This EAL is intended to address events that may have resulted in Safe Shutdown Buildings being subjected to forces beyond design limits and, thus, damage may be assumed to have occurred to safe shutdown systems. The initial "report" should not be interpreted as mandating a lengthy damage assessment prior to classification. No attempt is made in these EALs to assess the actual magnitude of the damage. Escalation to a higher emergency class, if appropriate, will be based on the specific system malfunctions, fission product barrier degradation, abnormal radiological releases, or Emergency Director judgment ICs.

For the purposes of this EAL, Safe Shutdown Buildings are considered to be the following locations:

- Vital portions of the RadWaste/Control Building
- Reactor Building
- Turbine Building
- Standby Service Water Pump Houses
- Diesel Generator Building
- Diesel Generator Fuel Oil Storage Area

This list was developed from equipment locations identified in FSAR Table 3.2-1, Seismic Category I. Equipment in Safe Shutdown Buildings is identified in FSAR Table 3.2-1, Seismic Category I.

REFERENCE(S):

NUMARC NESP-007, Methodology for Development of Emergency Action Levels, Rev. 2, Unusual Event HA1

FSAR Table 3.2-1

WNP-2 Plant Specific EAL Guideline, HA1.1

8.4.A.2 Alert

NUMARC IC: HA1 - Natural and destructive phenomena affecting Safe Shutdown Buildings.

APPLICABILITY:

| Operating Conditions | 1 | 2 | 3 | 4 | 5 | def |
|---|---|---|---|---|---|---|

EMERGENCY ACTION LEVEL:

Weather Service projected winds GT 100 mph
OR
CR measured winds GT 76 mph (5 minute average at 33 ft)
OR
Report by plant personnel confirming the occurrence of a tornado striking a plant safe shutdown building, Table 5

BASES:

This event is a natural and potentially destructive phenomena that may accompany certain events such as a tornado or hurricane. These sustained high winds may also be produced by unstable weather conditions. However this event occurs, it may be a precursor to a more serious event and, therefore, represents a potential for substantial degradation in the level of safety of the plant. Sustained high winds at this level are beyond the design basis limits for the plant as described in SAR Section 3.3, Wind Loading. Wind loads of this magnitude have the potential to damage safety-related systems and functions. As such, the potential exists for substantial degradation of the level of the safety of the plant.

This EAL is intended to address events that may have resulted in Safe Shutdown Buildings being subjected to forces beyond design limits and, thus, damage may be assumed to have occurred to safe shutdown systems. The initial "report" should not be interpreted as mandating a lengthy damage assessment prior to classification. No attempt is made in these EALs to assess the actual magnitude of the damage. Escalation to a higher emergency class, if appropriate, will be based on the specific system malfunctions, fission product barrier degradation, abnormal radiological releases, or Emergency Director judgment ICs.

For the purposes of this EAL, Safe Shutdown Buildings are considered to be the following locations:

- Vital portions of the RadWaste/Control Building
- Reactor Building
- Turbine Building
- Standby Service Water Pump Houses
- Diesel Generator Building
- Diesel Generator Fuel Oil Storage Area

This list was developed from equipment locations identified in FSAR Table 3.2-1, Seismic Category I. Equipment in Safe Shutdown Buildings is identified in FSAR Table 3.2-1, Seismic Category I.

REFERENCE(S):

NUMARC NESP-007, Methodology for Development of Emergency Action Levels, Rev. 2, Unusual Event HA1

PPM 4.12.4.8, WNP-2 Tornado/High Winds

FSAR Table 3.2-1

WNP-2 Plant Specific EAL Guideline, HA1.2

8.4.A.3 Alert

NUMARC IC: HA1 - Natural and destructive phenomena affecting Safe Shutdown Buildings.

APPLICABILITY:

| Operating Conditions | 1 | 2 | 3 | 4 | 5 | def |
|---|---|---|---|---|---|---|

EMERGENCY ACTION LEVEL:

Ash fallout from volcanic activity is severe enough to warrant plant shutdown

BASES:

In May of 1980, Mount St. Helens volcano erupted. Prevailing winds spread up to 1/4" of volcanic ash on the WNP-2 site, with much heavier concentrations of ash several miles north of the site. Ash can clog diesel-generator air intakes and can be highly abrasive to rotating machinery. Should the Ash fallout be severe enough to warrant plant shutdown, the event additionally represents a potential for substantial degradation in the level of safety of the plant.

This EAL is intended to address events that may have resulted in Safe Shutdown Buildings being subjected to forces beyond design limits and, thus, damage may be assumed to have occurred to safe shutdown systems. The initial "report" should not be interpreted as mandating a lengthy damage assessment prior to classification. No attempt is made in these EALs to assess the actual magnitude of the damage. Escalation to a higher emergency class, if appropriate, will be based on the specific system malfunctions, fission product barrier degradation, abnormal radiological releases, or Emergency Director judgment lCs.

REFERENCE(S):

NUMARC NESP-007, Methodology for Development of Emergency Action Levels, Rev. 2, Unusual Event HA1

WNP-2 Design Basis Ash Fallout, PPM 4.12.4.5

WNP-2 Plant Specific EAL Guideline, HA1.4

8.4.A.4 Alert

NUMARC IC: HA1 - Natural and destructive phenomena affecting Safe Shutdown Buildings.

APPLICABILITY:

| Operating Conditions | 1 | 2 | 3 | 4 | 5 | def |
|---|---|---|---|---|---|---|

EMERGENCY ACTION LEVEL:

Report by plant personnel of an event causing visible structural damage to a safe shutdown building, Table 5

BASES:

Visible structural damage is any observed physically degraded condition that indicates a significant impairment of the structural integrity of the building or area. An example of such a condition would be where a building sustained enough damage that it appears as if the roof could collapse at any time. The damage is based upon a report only. A detailed investigation or engineering evaluation is not required in order to classify the event.

This EAL is intended to address events that may have resulted in Safe Shutdown Buildings being subjected to forces beyond design limits and, thus, damage may be assumed to have occurred to safe shutdown systems. The initial "report" should not be interpreted as mandating a lengthy damage assessment prior to classification. No attempt is made in these EALs to assess the actual magnitude of the damage. Escalation to a higher emergency class, if appropriate, will be based on the specific system malfunctions, fission product barrier degradation, abnormal radiological releases, or Emergency Director judgment lCs.

For the purposes of this EAL, Safe Shutdown Buildings are considered to be the following locations:

- Vital portions of the RadWaste/Control Building
- Reactor Building
- Turbine Building
- Standby Service Water Pump Houses
- Diesel Generator Building
- Diesel Generator Fuel Oil Storage Area

This list was developed from equipment locations identified in FSAR Table 3.2-1, Seismic Category I. Equipment in Safe Shutdown Buildings is identified in FSAR Table 3.2-1, Seismic Category I.

REFERENCE(S):

NUMARC NESP-007, Methodology for Development of Emergency Action Levels, Rev. 2, Unusual Event HA1

FSAR Table 3.2-1

WNP-2 Plant Specific EAL Guideline, HA1.3

## 9.0 OTHER

The EALs defined in categories 1.0 through 8.0 specify the predetermined symptoms or events which are indicative of emergency or potential emergency conditions, and which warrant classification. While these EALs have been developed to address the full spectrum of possible emergency conditions which may warrant classification and subsequent implementation of the Emergency Plan, a provision for classification of emergencies based on operator/management experience and judgment is still necessary. The EALs of this category provide the Shift Manager or Emergency Director (ED) the latitude to classify emergency conditions consistent with the established classification criteria, based upon their judgment.

9 Other

9.1.U.1 Unusual Event

NUMARC IC: HU5 - Other conditions existing which, in the judgment of the Emergency Director, warrant declaration of an Unusual Event.

APPLICABILITY:

| Operating Conditions | 1 | 2 | 3 | 4 | 5 | def |
|---|---|---|---|---|---|---|

EMERGENCY ACTION LEVEL:

In the judgment of the Emergency Director, events are in progress or have occurred which indicate a potential degradation of the level of safety of the plant

BASES:

Events which are believed by the Emergency Director to indicate a potential degradation of the level of safety of the plant should be declared an Unusual Event. For those cases where the degradation in the level of the safety of the plant is tied to equipment or system malfunctions, the decision that the component is degraded should be based upon its functionality and not its operability.

A system, subsystem, train, component or device, though degraded in equipment condition or configuration, is functional if it is capable of maintaining respective system parameters within acceptable design limits.

Releases of radioactive material requiring offsite response or monitoring are not expected to occur at the Unusual Event level unless further degradation of safety systems occur. However, if one does occur, it will be classified under Category 5 "Radioactivity Release".

REFERENCE(S):

NUMARC NESP-007, Methodology for Development of Emergency Action Levels, Rev. 2, Unusual Event HU5

WNP-2 Plant Specific EAL Guideline, HU1.5

9 Other

9.1.U.2 Unusual Event

NUMARC IC: Loss or potential loss of Primary Containment

APPLICABILITY:

| Operating Conditions | 1 | 2 | 3 | | | |
|---|---|---|---|---|---|---|

EMERGENCY ACTION LEVEL:

Any event, in the judgment of the Emergency Director, that could lead to or has led to a loss or potential loss of primary containment as indicated by Fission Product Barrier Degradation Table, Table 6

BASES:

This EAL addresses any other factors that are to be used by the Emergency Director in determining whether the containment barrier is lost or potentially lost. In addition, the inability to monitor the barrier should also be incorporated in this EAL as a factor in Emergency Director judgment that the barrier may be considered lost or potentially lost.

REFERENCE(S):

NUMARC NESP-007, Methodology for Development of Emergency Action Levels, Rev. 2, Fission Product Barrier Basis Information for Table 3

WNP-2 Fission Product Barrier Evaluation

WNP-2 Plant Specific EAL Guideline, PC6.1

9 Other

9.1.A.1 Alert

NUMARC IC: HA6 - Other conditions existing which, in the judgment of the Emergency Director, warrant declaration of an Alert.

APPLICABILITY:

| Operating Conditions | 1 | 2 | 3 | 4 | 5 | def |
|---|---|---|---|---|---|---|

EMERGENCY ACTION LEVEL:

In the judgment of the Emergency Director, events are in progress or have occurred which indicate actual or potential substantial degradation of the level of safety of the plant

BASES:

This Emergency Action Level is intended to address unanticipated conditions not addressed explicitly elsewhere but that warrant declaration of an emergency because conditions exist which are believed by the Emergency Director to fall under the Alert emergency class. This includes a determination by the Emergency Director that additional assistance similar to that provided by the TSC and OSC staffs, including a transfer of the Emergency Director responsibilities to the TSC, is necessary for the event to be effectively mitigated. Transfer of Emergency Director duties for classification, offsite notifications and PAR decisions, is used as an initiator since an event significant enough to warrant transfer of command and control is a substantial reduction in the level of safety of the plant.

Activation of the TSC outside of the Emergency Plan in support of the Control Room staff is permissible. Releases that are expected to be limited to a small fraction of the EPA Protective Action Guideline exposure levels are addressed under Category 5 "Radioactivity Release".

REFERENCE(S):

NUMARC NESP-007, Methodology for Development of Emergency Action Levels, Rev. 2, Unusual Event HA6

WNP-2 Plant Specific EAL Guideline, HA6.1

9 Other

9.1.A.2 Alert

NUMARC IC: Loss or potential loss of fuel clad or RCS

APPLICABILITY:

| Operating Conditions | 1 | 2 | 3 | | | |
|---|---|---|---|---|---|---|

EMERGENCY ACTION LEVEL:

Any event, in the judgment of the Emergency Director, that could lead or has led to a loss or potential loss of either fuel clad or RCS barrier as indicated by Fission Product Barrier Degradation Table, Table 6

BASES:

This EAL addresses any other factors that are to be used by the Emergency Director in determining whether the fuel clad or RCS barriers are lost or potentially lost. In addition, the inability to monitor the barriers should also be considered in this EAL as a factor in Emergency Director judgment that the barriers may be considered lost or potentially lost.

REFERENCE(S):

NUMARC NESP-007, Methodology for Development of Emergency Action Levels, Rev. 2, Fission Product Barrier Basis Information for Table 3

WNP-2 Fission Product Barrier Evaluation

WNP-2 Plant Specific EAL Guideline, FC5.1, RCS6.1

9 Other

9.1.S.1 Site Area Emergency

NUMARC IC: HS3 - Other conditions existing which, in the judgment of the Emergency Director, warrant declaration of a Site Area Emergency.

APPLICABILITY:

| Operating Conditions | 1 | 2 | 3 | 4 | 5 | def |
|---|---|---|---|---|---|---|

EMERGENCY ACTION LEVEL:

In the judgment of the Emergency Director, events are in progress or have occurred which involve actual or likely major failures of plant functions needed for protection of the public

BASES:

This Emergency Action Level is intended to address unanticipated conditions not addressed explicitly elsewhere but that warrant declaration of an emergency because conditions exist which are believed by the Emergency Director to fall under the emergency class description for a Site Area Emergency.

Radioactive releases are not expected to result in exposure levels which exceed EPA Protective Action Guideline exposure levels except within the site boundary. Radioactive releases to the general public are addressed under Category 5 "Radioactivity Release".

REFERENCE(S):

NUMARC NESP-007, Methodology for Development of Emergency Action Levels, Rev. 2, Unusual Event HS3

WNP-2 Plant Specific EAL Guideline, HS3.1

9 Other

9.1.S.2 Site Area Emergency

NUMARC IC: Loss or potential loss of any two fission product barriers

APPLICABILITY:

| Operating Conditions | 1 | 2 | 3 | | | |
|---|---|---|---|---|---|---|

EMERGENCY ACTION LEVEL:

Any event, in the judgment of the Emergency Director, that could lead or has led to a loss or potential loss of any two fission product barriers as indicated by Fission Product Barrier Degradation Table 6.

BASES:

This EAL addresses unanticipated conditions affecting fission product barriers which are not addressed explicitly elsewhere. Declaration of an emergency is warranted because conditions exist which are believed by the Emergency Director to fall under the emergency class description for Site Area Emergency.

REFERENCE(S):

NUMARC NESP-007, Methodology for Development of Emergency Action Levels, Rev. 2, Fission Product Barrier Basis Information for Table 3

WNP-2 Fission Product Barrier Evaluation

WNP-2 Plant Specific EAL Guideline

9 Other

9.1.G.1 General Emergency

NUMARC IC: HG2 - Other conditions existing which, in the judgment of the Emergency Director, warrant declaration of a General Emergency.

0.0.1
APPLICABILITY:

| Operating Conditions | 1 | 2 | 3 | 4 | 5 | def |
|---|---|---|---|---|---|---|

EMERGENCY ACTION LEVEL:

In the judgment of the Emergency Director, other conditions exist which indicate either of the following:

- Actual or imminent substantial core degradation or melting with the potential for loss of containment integrity

  OR

- Potential for uncontrolled radionuclide releases which can reasonably be expected to exceed EPA PAG plume exposure levels outside the site boundary

BASES:

This Emergency Action Level is intended to address unanticipated conditions not addressed explicitly elsewhere but that warrant declaration of an emergency because conditions exist which are believed by the Emergency Director to fall under the General Emergency class. Imminent in this context means mitigation strategies and actions are not successful in preventing a challenge to Fuel Clad, Reactor Coolant Pressure Boundary or Primary Containment.

Radioactive releases may exceed EPA Protective Action Guideline exposure levels offsite for more than the immediate site area. Radioactive releases to the general public are addressed under Category 5 "Radioactivity Release".

REFERENCE(S):

NUMARC NESP-007, Methodology for Development of Emergency Action Levels, Rev. 2, Unusual Event HG2

WNP-2 Plant Specific EAL Guideline, HG2.1

9 Other

9.1.G.2 General Emergency

NUMARC IC: A loss of any two fission product barriers and loss or potential loss of the third

APPLICABILITY:

| Operating Conditions | 1 | 2 | 3 | | | |
|---|---|---|---|---|---|---|

EMERGENCY ACTION LEVEL:

Any event, in the judgment of the Emergency Director, that could lead or has led to a loss of any two fission product barriers and loss or potential loss of the third as indicated by Fission Product Barrier Degradation Table, Table 6

BASES:

This EAL addresses unanticipated conditions affecting fission product barriers which are not addressed explicitly elsewhere. Declaration of an emergency is warranted because conditions exist which are believed by the Emergency Director to fall under the emergency class description for the General Emergency class.

REFERENCE(S):

NUMARC NESP-007, Methodology for Development of Emergency Action Levels, Rev. 2, Fission Product Barrier Basis Information for Table 3

WNP-2 Fission Product Barrier Evaluation

WNP-2 Plant Specific EAL Guideline

Attachment 4.2

# TABLE 6, FISSION PRODUCT BARRIER DEGRADATION TABLE BASES

| Fuel Clad Loss | Fuel Clad Potential Loss | RCS Loss | RCS Potential Loss | PC Loss | PC Potential Loss |
|---|---|---|---|---|---|
| Coolant activity GT 300 $\mu$Ci/gm dose equivalent iodine | RPV level LT -161 inches | Containment Radiation Monitor CMS-RIS-27E and CMS-RIS-27F reading GT 70 R/hr | Total RCS leakage GT 30 gpm inside PC or EDR-FRS-623, Pen 2 upscale high | Rapid unexplained decrease of PC pressure following an initial increase | Containment Radiation Monitor CMS-RIS-27E and CMS-RIS-27F reading GT 14,000 R/hr |
| Containment Radiation Monitor CMS-RIS-27E and CMS-RIS-27F reading GT 3,600 R/hr | | RPV level LT -161 inches | Unisolable primary system discharging outside PC resulting in any area temperature or radiation level above Maximum Safe Operating Values (PPM 5.3.1, "Secondary Containment Control") | Drywell pressure response not consistent with LOCA conditions | PC $H_2$ and $O_2$ concentrations GT 6% $H_2$ and 5% $O_2$ |
| Entry into Severe Accident Guidelines | | Drywell pressure GT 1.68 psig with indications of RCS leakage inside drywell | | Failure of containment isolation valves (LCS Table 1.6.3.1-1) in any one line to close following auto or manual initiation AND downstream pathway outside primary containment exists OR | Entry into Severe Accident Guidelines<br>Loss of pressure suppression function |
| | | | | Unisolable primary system discharging outside PC resulting in any area temperature or radiation level above Maximum Safe Operating Values (PPM 5.3.1, "Secondary Containment Control") | Cannot maintain plant parameters within HCTL, SRVTPLL |
| | | | | Intentional venting per PPM 5.2.1, "Primary Containment Control" | Wetwell pressure exceeds PSP<br>PC pressure GT PCPL |

| | | |
|---|---|---|
| Any event, in the judgment of the Emergency Director, that could lead or has led to a loss or potential loss of the fuel clad barrier | Any event, in the judgment of the Emergency Director, that could lead or has led to a loss or potential loss of the RCS barrier | Any event, in the judgment of the Emergency Director, that could lead to or has led to a loss or potential loss of primary containment barrier |

Fuel Clad Loss Indicators

*Coolant activity GT 300 μCi/gm dose equivalent iodine*

Fuel Clad barrier damage is indicated by a coolant activity of 300 μCi/gm dose equivalent I-131. This amount of activity is well above that expected for iodine spikes and corresponds to approximately 2-5% fuel clad failure in accordance with assessment performed by the NUMARC EAL task force. This amount of clad failure indicates significant clad heating and, thus, the Fuel Clad barrier is considered lost.

*Containment Radiation Monitor CMS-RIS-27E and CMS-RIS-27F reading GT 3,600 R/hr*

A 3,600 R/hr reading on CMS-RIS-27E and CMS-RIS-27F is used to indicate a release of reactor coolant, with elevated activity indicative of fuel damage, into the drywell. Therefore, this condition represents loss of both the fuel clad and RCS barriers. This value assumes an instantaneous release and dispersal of the reactor coolant noble gas and iodine inventory associated with coolant concentration associated with 5% clad failures into the drywell atmosphere. WNP-2 has elected to provide an example dealing with the top end of the 2-5% range discussed in NESP-007. This value assumes an instantaneous release and dispersal of the reactor coolant noble gas and iodine inventory into the drywell atmosphere.

*Entry into Severe Accident Guidelines*

Entry into Severe Accident Guidelines is indicative of both a loss of fuel clad and RCS barriers because:

1) RPV water level cannot be restored and maintained above -161 inches, or

2) For ATWS conditions, RPV water level cannot be maintained above -192", or

3) If RPV water level cannot be determined, RPV flooding for ATWS or non-ATWS conditions cannot be established or maintained.

Entry into Severe Accident Guidelines is indicative of a potential loss of primary containment because actions to flood the containment may jeopardize the pressure suppression capability of the containment or result in the need to vent the RPV or primary containment.

Fuel Clad Potential Loss Indicators

*RPV level LT -161 inches*

Indicating fuel clad barrier potential Loss at -161" (Top of Active Fuel) ensures that an emergency is declared before fuel perforation occurs. An unintentional level decrease to below -161" is also indicative of a large RCS break, or a smaller break with loss of high pressure makeup.

RCS Loss Indicators

*Containment Radiation Monitor CMS-RIS-27E and CMS-RIS-27F reading GT 70 R/hr*

A 70 R/hr reading on CMS-RIS-27E and CMS-RIS-27F is used to indicate a loss of the Reactor Coolant System barrier. This value assumes a 0.1% clad damage and the instantaneous release and dispersal of the reactor coolant noble gas and iodine inventory into the drywell atmosphere. The value of 0.1% clad damage was assumed to be the greatest amount of fuel failure under which power operation could occur.

*RPV level LT -161 inches*

An unintentional level decrease to below -161" is also indicative of a large RCS break, or a smaller break with loss of high pressure makeup.

*Drywell pressure GT 1.68 psig with indications of RCS leakage inside drywell*

The 1.68 psig drywell pressure for the Reactor Coolant System barrier loss is based on the drywell pressure scram and isolation setpoint and indicates a Loss of Coolant Accident (LOCA). A potential loss of the Reactor Coolant System barrier would not result in an increasing drywell pressure and, therefore, no indicator is provided. The qualifier of "with indications of RCS leak inside drywell" is included as an indicator of RCS boundary degradation and eliminates a drywell pressure increase due to a loss of drywell ventilation.

RCS Potential Loss Indicators

*Total RCS leakage GT 30 gpm inside PC or EDR-FRS-623, Pen 2 upscale high*

Total leakage is considered to be the total of both identified and unidentified leakage as measured on EDR-FRS-623 pen 1 (unidentified - Floor Drain Sump Fill Rate) and pen 2 (identified - Equipment Drain Sump Fill Rate). The maximum measurable identified leak rate (pen 2) in the Control Room at WNP-2 is 30 gpm, therefore 30 gpm is used instead of the 50 gpm limit recommended by NUMARC.

*Unisolable primary system discharging outside PC resulting in any area temperature or radiation level above Maximum Safe Operating Values (PPM 5.3.1, "Secondary Containment Control")*

The presence of elevated area temperatures and/or radiation levels in the secondary containment may be indicative of an unisolable primary system leakage outside the primary containment. These conditions represent a loss of the containment barrier and a potential loss of the RCS barrier.

PC Loss Indicators

*Rapid unexplained decrease of PC pressure following an initial increase*

Rapid unexplained loss of pressure (i.e., not attributable to drywell spray or condensation effects) following initial pressure increase indicates a loss of containment integrity. In interpreting this EAL, an initial increase is any PC pressure increase above 1.68 psig. A rapid decrease should be considered any decrease which occurs faster than the initial increase.

*Drywell pressure response not consistent with LOCA conditions*

Containment or drywell pressure responses not consistent with LOCA conditions indicate a loss of the Primary Containment barrier. This may be noticed as a decrease in drywell pressure when no operation action (e.g., starting drywell cooling fans) has been taken. It would also include a failure of the drywell pressure to increase as expected during a LOCA.

*Failure of containment isolation valves (LCS Table 1.6.1.3-1) in any one line to close following auto or manual initiation*
*AND*
*downstream pathway outside primary containment exists*
*OR*

*Unisolable primary system discharging outside PC resulting in any area temperature or radiation level above Maximum Safe Operating Values (PPM 5.3.1, "Secondary Containment Control")*

The failure to isolate condition is intended to cover containment isolation failures allowing a direct flow path to the environment such as a failure of MSIVs to close with open valves downstream to the turbine or condenser. Downstream path outside primary containment does not mean leakage incident to normal system integrity. Only those penetrations required to isolate per Technical Specifications should be considered.

The presence of elevated area temperatures and/or radiation levels in the secondary containment may be indicative of an unisolable primary system leakage outside the primary containment. These conditions represent a loss of the containment barrier and a potential loss of the RCS barrier.

*Intentional venting per PPM 5.2.1, "Primary Containment Control"*

Venting, if necessary to prevent failure of primary containment, is included as a loss of primary containment. This is specified in PPM 5.2.1, "Primary Containment Control" when containment hydrogen and oxygen concentrations are in excess of or cannot be determined to be below combustible limits or when wetwell pressure approaches PCPL. However, routine venting per PPM 2.3.1, as long as radioactivity release rates are maintained, is not considered a loss of primary containment.

PC Potential Loss Indicators

*Containment Radiation Monitor CMS-RIS-27E and CMS-RIS-27F reading GT 14,000 R/hr*

An 14,000 R/hr reading on CMS-RIS-27E and CMS-RIS-27F is used to indicate potential failure of the primary containment barrier. It is a value that indicates significant fuel damage well in excess of that associated with the loss of both Fuel Clad and RCS barriers. A major release of radioactivity requiring offsite protective actions is not possible unless a major failure of fuel cladding allows radioactive material to be released from the core into the reactor coolant.

Regardless of whether containment is challenged, this amount of activity in containment, if released, could have such severe consequences that it is prudent to treat this as a potential loss of containment, such that a General Emergency declaration is warranted. This level of activity is indicative of approximately 20% clad failure. This value assumes an instantaneous release and dispersal of the reactor coolant noble gas and iodine inventory into the drywell atmosphere.

*PC $H_2$ and $O_2$ concentrations GT 6% $H_2$ and 5% $O_2$*

Hydrogen and Oxygen concentrations at or above PPM 5.2.1, "Primary Containment Control", Table 19, Combustible Limits, in the drywell or wetwell represent a potential for a deflagration with a subsequent containment failure.

*Entry into Severe Accident Guidelines*

Entry into Severe Accident Guidelines is indicative of a potential loss of primary containment because actions to flood the containment may jeopardize the pressure suppression capability of the containment or result in the need to vent the RPV or primary containment.

*Loss of pressure suppression function*

Physical degradation of the containment structure as indicated by an equalization between suppression chamber and drywell pressures constitutes a loss of pressure suppression capability and should be considered a potential loss of containment.

*Cannot maintain plant parameters within HCTL, or SRVTPLL*

The Heat Capacity Temperature Limit (HCTL) is the highest wetwell temperature at which initiation of RPV depressurization will not result in exceeding the Primary Containment Pressure Limit (PCPL) before the rate of energy transfer to the containment is within the capacity of the containment vent. The HCTL is used to preclude failure of the containment or equipment necessary for safe shutdown by assuring that RPV blowdown does not cause containment pressure to exceed the PCPL. The potential loss occurs when RPV pressure and wetwell temperature cannot be maintained below HCTL.

The SRV Tail Pipe Level Limit (SRVTPLL) is the highest wetwell water level at which opening of an SRV will not result in exceeding the code allowable stresses in the tailpipe, tailpipe supports, quenchers or quencher supports. This level is a function of RPV pressure and the Limit is utilized to preclude SRV system failure and containment failure. The consequences of operating SRVs when wetwell water level exceeds the SRVTPLL may include direct pressurization of the containment from a break in the SRV tail pipe. The resulting primary containment pressurization could cause containment failure.

*Wetwell pressure exceeds PSP*

Entry into the unsafe region of the Pressure Suppression Pressure curve (PPM 5.2.1, "Primary Containment Control", Figure F, PSP) is included as a potential primary containment barrier loss. A rapid depressurization of the RPV (e.g., occurrence of a large break LOCA or initiation of ADS) at wetwell pressures in excess of the PSP may cause either:

- Wetwell pressure responses indicative of a failure in the drywell-to-wetwell boundary, or
- Wetwell pressure increases to or beyond the Primary Containment Pressure Limit (PPM 5.2.1, "Primary Containment Control", Figure B, PCPL).

*PC pressure GT PCPL and increasing*

Containment pressures that exceeds 34.7 psig, the maximum expected pressure following a LOCA, have the potential to result in a loss of the containment barrier. Preparations to vent containment are required by PPM 5.2.1, "Primary Containment Control" when Drywell pressure exceeds PCPL and before the Wetwell pressure reaches the Primary Containment Pressure Limit (PCPL). Therefore, this condition is considered a potential loss of containment.

| ENERGY NORTHWEST | | USE CURRENT REVISION |
|---|---|---|
| COLUMBIA GENERATING STATION<br>PLANT PROCEDURES MANUAL | | |
| PROCEDURE NUMBER<br>*13.2.1 | APPROVED BY<br>DWC - Revision 14 | DATE<br>09/06/00 |
| VOLUME NAME<br>EMERGENCY PLAN IMPLEMENTING PROCEDURES | | |
| SECTION<br>PROTECTIVE MEASURES | | |
| TITLE<br>EMERGENCY EXPOSURE LEVELS/PROTECTIVE ACTION GUIDES | | |

TABLE OF CONTENTS


1.0 PURPOSE . . . . . 2

2.0 REFERENCES . . . . . 2

3.0 PRECAUTIONS AND LIMITATIONS . . . . . 2

4.0 PROCEDURE . . . . . 3

4.1 Emergency Worker PAGs . . . . . 3
4.2 Public Protective Action Guides . . . . . 4
4.3 Administration of Potassium Iodide (KI) . . . . . 4

5.0 ATTACHMENTS . . . . . 5

5.1 Federal Personnel Dose Limits (10CFR20) . . . . . 6
5.2 EPA 400 Protective Action Guides For Emergency Workers . . . . . 7
5.3 Protective Action Guides (PAG) For The Plume Exposure Pathway . . . . . 8
5.4 Guidance for Administering Potassium Iodide (KI) . . . . . 9
5.5 Emergency Exposure Request . . . . . 14

## 1.0 PURPOSE

This procedure outlines the authority and process for exceeding annual administrative exposure holdpoints and implementing EPA-400 limits for emergency worker Protective Action Guides (PAGs). Additionally, it provides guidance for administration of potassium iodide (KI) and authorization of Emergency Exposures above EPA-400 limits during emergency situations. {R-1599}

## 2.0 REFERENCES

2.1 Letter No. G02-93-125, Supply System to NRC, Dated May 27, 1993 {2.1}

2.2 FSAR, Chapter 13.3, Emergency Plan, Section 5

2.3 10CFR50.47(b)(11) {R-1599}

2.4 10CFR20, Standards for Protection Against Radiation

2.5 State of Washington - Department of Health, "Response Procedures for Radiation Emergencies", June 1993

2.6 United States Environmental Protection Agency, "Manual of Protective Action Guides and Protective Actions for Nuclear Incidents", EPA 400, May 1992

2.7 GEN-RPP-07, Personnel Exposure Limits and Monitoring Requirements

2.8 GEN-RPP-010, Use of Respiratory Protection Equipment

2.9 PPM 13.2.2, Determining Protective Action Recommendations

2.10 PPM 13.13.3, Intermediate Phase MUDAC Operations

## 3.0 PRECAUTIONS AND LIMITATIONS

3.1 Declaration of an Alert or higher emergency classification automatically waives Energy Northwest administrative exposure holdpoints.

3.2 The use of air purifying respirators in the Protected Area shall be considered when the Derived Air Concentration (DAC) value for radioiodine is not expected to exceed 50 DAC. Self Contained Breathing Apparatus (SCBA) may be used when the expected or actual radioiodine airborne concentration exceeds 50 DAC.

3.3 If respiratory protection equipment is not prescribed, administer potassium iodide (KI) as outlined in Attachment 5.4. {2.1}

3.4 The Emergency Director has the authority and responsibility for approving emergency worker exposures above the EPA PAG of 5 rem. He may delegate this authority and responsibility.

## 4.0 PROCEDURE

### 4.1 Emergency Worker PAGs

Responsibilities of the Radiation Protection Manager (for workers within the Protected Area), and Radiological Emergency Manager (for Energy Northwest emergency workers and field team members at any location outside of the Protected Area):

NOTE: When implementing emergency authorized exposure guides, prompt, sound judgment and flexibility of action are crucial to the success of any type of emergency action.

4.1.1 Evaluate alternatives prior to granting authorization to exceed the EPA PAG emergency worker guidelines. Refer to Attachment 5.2.

a. Consideration of approving additional exposure beyond 5 rem should include the following:

- The presence of conditions that prevent the rotation of workers or other commonly used dose reduction methods.
- The exposure of workers that is incurred for the protection of large populations may be justified for situations in which the collective dose avoided by the emergency operation is significantly larger than incurred by the workers involved.

4.1.2 When authorizing exposures in excess of emergency worker limits, refer to Attachment 5.2, Protective Action Guides For Emergency Workers.

NOTE: The exposure values described below are intended as guides and not absolute limits. These guidelines are contained in the referenced EPA 400 Manual.

- 25 rem Total Effective Dose Equivalent (TEDE) for life-saving or protection of large populations
- 10 rem TEDE for situations to protect valuable property

4.1.3 Obtain concurrence from the Emergency Director or designee prior to implementing emergency exposure guides above EPA PAG limits, and:

a. Caution personnel to maximize efforts to remain below emergency worker limits.

4.1.4 Document the request and justification for the Emergency Exposure on Attachment 5.5, Emergency Exposure Request.

a. Following completion of the Emergency Exposure Request, submit the request to the Emergency Director or designee for signature.

4.2 Public Protective Action Guides

Responsibilities of the Emergency Director and Radiation Protection Manager or Radiological Emergency Manager, and Protective Action Decision Group in MUDAC:

4.2.1 Refer to Attachment 5.3, Protective Action Guides for the Plume Exposure Pathway, for guidance in developing public Protective Action Recommendations (PARs) for the Plume Emergency Planning Zone.

4.2.2 Refer to PPMs 13.13.3 and 13.2.2 for Protective Action Recommendation guidance.

4.3 Administration of Potassium Iodide (KI)

4.3.1 Shift Manager Duties (as Emergency Director)

a. Refer to Attachment 5.4, Guidance for Administering Potassium Iodide (KI).

b. When action conditions are reached, recommend self administration of KI to shift workers within the protected area. Consider emergency workers in the Control Room, Central Alarm Station, Operations Support Center, Technical Support Center and any other Protected Area location deemed necessary.

4.3.2 Radiation Protection Manager Duties

a. Refer to Attachment 5.4, Guidance for Administering Potassium Iodide (KI).

b. When action conditions are reached, advise the TSC Manager that KI be recommended for affected emergency workers within the protected area. Consider emergency workers in the Control Room, Central Alarm Station, Operations Support Center, Technical Support Center and any other Protected Area location deemed necessary.

4.3.3 TSC Manager Duties

Direct the appropriate centers to recommend self administration of KI by emergency workers.

4.3.4 Radiological Emergency Manager Duties

a. Refer to Attachment 5.4, Guidance for Administering Potassium Iodide (KI).

b. When action conditions are reached, advise the EOF Manager that KI be recommended for affected emergency workers outside of the protected area. Consider all emergency workers within the Plume Exposure Emergency Planning Zone (EPZ).

4.3.5 EOF Manager Duties

a. Recommend affected Energy Northwest workers outside of the Protected Area to self administer KI.

b. Notify offsite authorities (State and County) that the State criteria for recommending KI has been met.

## 5.0 ATTACHMENTS

5.1 Federal Personnel Dose Limits (10CFR20)

5.2 EPA 400 Protective Action Guides For Emergency Workers

5.3 Protective Action Guides (PAG) For The Plume Exposure Pathway

5.4 Guidance for Administering Potassium Iodide (KI)

5.5 Emergency Exposure Request

## FEDERAL PERSONNEL DOSE LIMITS (10CFR20)

Dose Limits for Adults, Embryo/Fetus, Minors, Members of the Public, and PSEs.

The licensee shall control the occupational dose to individual adults (20.1201), dose to an embryo/fetus during the entire pregnancy for declared pregnant women (20.1208), doses to minors (20.1207), individual members of the public (20.1301), and exposures necessary due to an exceptional situation constituting a planned special exposures (20.1206). The following dose limits apply:

- The total effective dose equivalent (TEDE) for adult workers shall be limited to 5 rem (5,000 mrem) per year.
- The total organ dose equivalent (TODE) for adult workers shall be limited to 50 rem (50,000 mrem) per year.
- The lens dose equivalent (LDE) for adult workers shall be limited to 15 rem (15,000 mrem) per year.
- The shallow dose equivalent (SDE) to the skin or to any extremity for adult workers shall be limited to 50 rem (50,000 mrem) per year.
- Hot particle exposure limits are the same as the shallow dose equivalent (SDE) limit to the skin (50 rem/yr), but will not be added to skin dose(s) from sources other than hot particles, nor are hot particles exposures from different particles summed unless the different particles result in doses to the same area (within 1 cm) of the skin.
- The dose to the embryo/fetus during the entire pregnancy, due to occupational exposure of a declared pregnant woman, shall not exceed 0.5 rem (500 mrem) TEDE. If the embryo/fetus has accumulated 0.5 rem or greater during the time between conception and declaration, the embryo/fetus shall be limited to 0.05 rem (50 mrem) for the remainder of the pregnancy.
- The annual occupational dose limits for minors are 10 percent of the annual dose limits specified for adult workers.
- Individual members of the general public shall be limited to 0.1 rem per year (100 mrem) TEDE from licensed operations.

## EPA 400 PROTECTIVE ACTION GUIDES FOR EMERGENCY WORKERS

| DOSE LIMIT (TEDE)+ | ACTIVITY | PROTECTIVE ACTIONS |
|---|---|---|
| 5 rem | ALL | |
| 10 rem | PROTECTING VALUABLE PROPERTY | Lower dose not practicable |
| 25 rem | LIFE-SAVING OR PROTECTION OF LARGE POPULATIONS | Lower dose not practicable |
| >25 rem | LIFE-SAVING OR PROTECTION OF LARGE POPULATIONS | Only on a voluntary basis to persons fully aware of the risks involved. |

NOTE: Refer to Attachment 5.4 for information concerning the administration of Potassium Iodide (KI).

\+ Sum of external effective dose equivalent and committed effective dose equivalent to nonpregnant adults from exposure and intake during an emergency situation. Workers performing services during emergencies should limit dose to the lens of the eye to three times the listed value and doses to any other organ (including skin and body extremities) to ten times the listed value. These limits apply to all doses from an incident, except those received in an unrestricted area as members of the public during the intermediate phase of the incident.

++ CEDE is the risk weighted sum of committed dose equivalent (CDE). CDE is the total dose from internally deposited radionuclide over a subsequent 50 year period.

## PROTECTIVE ACTION GUIDES (PAG) FOR THE PLUME EXPOSURE PATHWAY

| Population | Total Effective Dose Equivalent (rem) | Thyroid CDE (rem) |
|---|---|---|
| General Public | 1 | 5 |

The PAG limits the Total Effective Dose Equivalent (TEDE) which is the sum of the deep dose equivalents (DDE) resulting from external exposure to plume or ground deposition and the committed effective dose equivalent (CEDE) projected over 50 years incurred from all significant inhalation pathways during the early phase. Committed dose equivalents (CDE) to the thyroid and to the skin may be 5 and 50 times larger, respectively.

Attachment 5.3

# GUIDANCE FOR ADMINISTERING POTASSIUM IODIDE (KI)

A. Purpose

This attachment provides guidelines for recommending administration of potassium iodide (KI) to all emergency workers both on and offsite as a thyroid-blocking agent to provide protection against airborne radioiodine.

B. Location of KI Supplies

1. Control Room
2. Technical Support Center
3. Operations Support Center
4. In-plant Emergency Equipment Cabinets
5. Emergency Operations Facility
6. Field Team Kits
7. Protected Area Access Point (PAAP)

C. Discussion

Each THYRO-BLOCK tablet contains 130 mg of potassium iodide (KI). Certain forms of iodine help the thyroid gland work. The thyroid can "store" or hold only a certain amount of iodine. In a radiation emergency, radioactive iodine may be released in the air where it may be breathed or swallowed. It may enter the thyroid gland and damage it by overexposure. When potassium iodide is administered, it saturates the thyroid gland, thereby reducing the chance that harmful radioactive iodine will enter the thyroid gland.

Possible side effects include skin rashes, swelling of the salivary glands, and "iodism", (metallic tastes, burning mouth and throat, sore teeth and gums, symptoms of a head cold, and sometimes upset stomach and diarrhea). A few people have an allergic reaction with more serious symptoms. These could be fever and joint pains, or swelling of parts of the face and body and at times, severe shortness of breath that requires immediate medical attention. Taking iodine may rarely cause overactivity of the thyroid gland, underactivity of the thyroid gland, or enlargement of the thyroid gland (goiter). The only people who should not take potassium iodide are people who know they are allergic to iodine. One may take potassium iodide even if you are taking medicine for a thyroid problem (for example, a thyroid hormone or anti-thyroid drug). Pregnant and nursing women can also take this drug.

D. Precautions

1. Potassium iodide should not be used by people allergic to iodine. In case of overdose or allergic reaction, refer the individual to medical personnel.

2. Doses recommended by these guidelines should be followed by all applicable personnel to avoid overdoses or insufficient protection.

3. Only the TSC Manager and EOF Manager (or the Shift Manager acting as Emergency Director) can authorize the use of THYRO-BLOCK. They SHALL establish the extent and duration of the THYRO-BLOCK usage, based on radiological conditions and the advice of the Radiation Protection Manager or Radiological Emergency Manager, as appropriate.

E. Determination of KI Use

NOTE: If airborne Iodine concentrations have not been analyzed, consider plant conditions including the potential for unmonitored/unfiltered releases from the reactor coolant pressure boundary to occupied, or potentially occupied spaces.

1. The EOF Manager, in consultation with the Radiological Emergency Manager, should notify the State and County authorities that the State criteria for administering KI based on the following criteria has been met:

   - Projected or actual 250 mrem/hr to the Thyroid, OR

   - Air sample results $> 1.4 \times 10^{-7}$ $\mu$Ci/cc I-131, OR

2. The TSC Manager, or the Shift Manager acting as the Emergency Director, in consultation with the Radiation Protection Manager, should recommend that emergency workers in any affected Protected Area location take KI:

   - If the projected thyroid CDE is 25 rem or more

3. As directed by the Radiation Protection Manager, personnel within the Protected Area shall use appropriate respiratory protection, and/or KI for thyroid protection.

4. The EOF Manager, in consultation with the Radiological Emergency Manager, should recommend that Energy Northwest emergency workers at affected locations outside the Protected Area (Security personnel, environmental field teams, etc.) take KI:

   - If the projected thyroid CDE is 25 rem or more
   - 25 rem CDE thyroid is 1000 DAC-hours and is equivalent to an intake of approximately 25 $\mu$Ci Iodine-131

5. Determine the radiological conditions in occupied areas using the following methods, as applicable:

   - Dose rate surveys
   - Air samples
   - Continuous Air Monitor (CAM) readings
   - Area Radiation Monitor readings
   - Plant effluent process monitor readings
   - Offsite dose projection (EDPS) data

6. Determine if nonessential personnel could be evacuated from affected areas to prevent potential, large thyroid doses.

7. Based on actual (or potential) radiological conditions, determine the projected thyroid dose to personnel in occupied, affected areas.

   NOTE: The FDA's Bureau of Radiological Health and Drugs Bulletin Volume XVI, Number 7, recommends issuance of KI to individuals projected to receive a thyroid dose of 25 rem CDE or more.

8. If the projected dose to affected personnel has exceeded, or is projected to exceed 25 rem CDE thyroid, recommend to the TSC Manager or EOF Manager that KI be administered (to affected personnel only).

   NOTE: To be most effective, potassium iodide must be taken immediately prior to, or within a few hours after exposure to high concentrations of radioiodine.

9. If and when the TSC Manager or EOF Manager (or Shift Manager as Emergency Director) decide to administer KI to affected personnel, refer to Section F of this Attachment.

10. The EOF Manager should notify offsite authorities (State, County) when the State criteria for recommending KI has been met.

NOTE: The use of potassium iodide is strictly voluntary.

F. KI Issuance Instructions

| |
|---|
| CAUTION: Prior to issuing Potassium Iodide, personnel should be cautioned to NOT participate if they know that they are allergic to iodine. |

1. For areas within the Protected Area, the RPM will coordinate the issuance of KI to affected individuals.

2. For areas outside the Protected Area, the REM will coordinate the issuance of KI to affected individuals.

3. Issue KI to affected individuals as follows:

   - Question personnel to determine if they know if they are allergic to iodine, and if so, DO NOT issue KI to those individuals.

   - Determine if individuals will voluntarily participate (by taking KI) as directed.

   - For participating individuals, issue one bottle of potassium iodide (KI) tablets to each individual whose thyroid dose is projected to exceed 25 rem CDE.

   - Provide a THYRO-BLOCK information pamphlet to all individuals issued KI and ensure personnel are aware of the following information:

     - The recommended KI dosage is one tablet daily, for a period not to exceed 10 days

     - Do not exceed the recommended dosage

- Begin taking KI when directed by the TSC Manager or EOF Manager (or Shift Manager acting as Emergency Director)

- To be most effective, KI should be taken shortly before, or immediately after, exposure to radioiodine, however, the initial administration will still have substantial benefit if it is taken three or four hours after exposure

- If side effects are experienced, stop taking KI, notify your supervisor and obtain medical attention

- Using the Personnel Accountability Log or other appropriate log, record the following information:

  - The name of the individuals contacted

  - Whether the individual participated in KI administration

  - The date and time the individual began using KI

4. Upon completion of KI issuance to affected personnel, inform the TSC Manager and the EOF Manager of any individuals that decline to use KI.

5. Return all completed Personnel Accountability Logs or other logs used to issue KI to the RPM and REM.

6. When directed, personnel should discontinue taking KI and return the unused portion to the Plant for proper disposal.

7. The Personnel Accountability Logs or other logs used to issue KI should be completed by indicating the date individuals discontinued KI use.

## EMERGENCY EXPOSURE REQUEST

TASK/JUSTIFICATION FOR INCREASED EXPOSURE:

_____

_____

_____

Exposure Limit for This Individual:_____

INDIVIDUAL INFORMATION:

Name:_____ Date:_____ SSN:_____

Exposure (YTD):_____ Lifetime:_____

I have received instructions in the measures to be taken, the radiological conditions, and have been advised of the associated risks involved.

Individual to receive increased exposure:_____
(Signature required if expected to exceed GT TEDE 25 REM)

COGNIZANT EMERGENCY MANAGER (RPM or REM)

All evaluations are complete, documented and attached, if necessary:

Radiation Protection Manager, or Radiological Emergency Manager:

_____ Date: _____

APPROVAL:

Emergency Director or Designee:

_____ Date: _____

Attachment 5.5

| ENERGY NORTHWEST | | USE CURRENT REVISION |
|---|---|---|
| COLUMBIA GENERATING STATION<br>PLANT PROCEDURES MANUAL | | |
| PROCEDURE NUMBER<br>*13.5.3 | APPROVED BY<br>DWC - Revision 19 | DATE<br>09/06/00 |
| VOLUME NAME<br>EMERGENCY PLAN IMPLEMENTING PROCEDURES | | |
| SECTION<br>EVACUATION AND ACCOUNTABILITY | | |
| TITLE<br>EVACUATION OF EXCLUSION AREA AND/OR NEARBY FACILITIES | | |

TABLE OF CONTENTS


Page

1.0 PURPOSE . . . . . 2

2.0 DISCUSSION . . . . . 2

3.0 REFERENCES . . . . . 3

4.0 PROCEDURE . . . . . 3

4.1 Emergency Director Responsibilities . . . . . 3

4.2 Security Manager Responsibilities . . . . . 4

4.3 Security Supervisor Responsibilities . . . . . 5

4.4 Offsite Agency Coordinator Responsibilities . . . . . 5

4.5 Radiological Emergnecy Manager Responsibilities . . . . . 6

5.0 ATTACHMENTS . . . . . 6

5.1 Exclusion Area Map . . . . . 7

## 1.0 PURPOSE

The purpose of this procedure is to identify the emergency actions and responsibilities of the Emergency Director to cause evacuation of the Exclusion Area when conditions so dictate.

The procedure also identifies actions to be taken in the event the need for evacuation may impact other facilities in the local area, including the Department of Energy's Fast Flux Test Facility.

## 2.0 DISCUSSION

2.1 The principle consideration when contemplating an Exclusion Area evacuation is the safety of personnel. An Exclusion Area evacuation is the orderly withdrawal of all personnel, except those required to respond to the emergency situation, from areas outside the Protected Area but within the Exclusion Area boundary, and including those portions of the Owner Controlled Area outside the Exclusion Area. An Exclusion Area evacuation will be announced using sirens, PA announcements and telephone notifications

2.2 The Emergency Director is responsible for determining when an Exclusion Area evacuation should be conducted. The decision to evacuate personnel should be based on the course of action which presents the minimum risk to employees. Some examples of conditions which make an Exclusion Area evacuation not advisable include, but are not limited to:

- An ongoing security threat affecting personnel in the Exclusion Area (consult with the Security Manager to aid in determining the safest course of action)
- Inclement weather (e.g., high winds or hazardous road conditions may preclude a safe evacuation of personnel)
- Radiological hazards exist (determine which action would result in lowest dose to evacuating personnel)
- Other hazards exist which might subject evacuees to a higher risk to personnel safety than not evacuating

If conditions for an Exclusion Area evacuation are present, but the decision is made to not evacuate personnel due to safety concerns, personnel will normally remain at their work locations unless directed otherwise.

2.3 Normally, Exclusion Area evacuations will be considered at a Site Area Emergency, or when other conditions warrant and is an automatic action at General Emergency. Exclusion Area evacuees will normally be directed to proceed home.

If a radiological contamination problem is identified, evacuees will be directed to an alternate location for radiological monitoring and decontamination. The Energy Northwest Office Complex (ENOC) is the primary offsite assembly area.

## 3.0 REFERENCES

3.1 FSAR, Chapter 13.3, Emergency Plan, Sections 4, 5

3.2 PPM 13.2.2, Determining Protective Action Recommendations

3.3 PPM 13.5.5, Personnel Accountability, Search and Rescue

3.4 PPM 13.7.5, Offsite Assembly Area Locations

3.5 WNP-2 Public Address Message Format - Exclusion Area Evacuation, 968-26051

## 4.0 PROCEDURE

### 4.1 Emergency Director Responsibilities

4.1.1 Determine the need for an Exclusion Area evacuation at Site Area Emergency. Exclusion Area evacuations are automatic at the General Emergency classification.

4.1.2 The decision to evacuate personnel should be based on the course of action which presents the minimum risk to employees. Some examples of conditions which make an Exclusion Area evacuation not advisable include, but are not limited to:

- An ongoing security threat (consult with the Security Manager to aid in determining the safest course of action)
- Inclement weather (e.g., high winds or hazardous road conditions may preclude a safe evacuation of personnel)
- Radiological hazards exist (determine which action would result in lowest dose to evacuating personnel)
- Other hazards exist which might subject evacuees to a higher risk to personal safety than not evacuating

If conditions for an Exclusion Area evacuation are present, but the decision is made to retain personnel on site due to safety concerns, personnel will normally remain at their work locations unless directed otherwise.

NOTE: If the EOF Manager is acting as Emergency Director, coordinate the following steps with the Radiological Emergency Manager (REM):

4.1.3 If the decision is made to evacuate the Exclusion Area, determine if radiological hazards exist or are suspected within the Exclusion Area. If a radiological hazard does exist or a release is in progress, then direct evacuees to report to the ENOC assembly area. Determine safe evacuation routes and hazardous areas to avoid.

4.1.4 If evacuation routes are unavailable due to hazards or severe weather, consider sheltering in place until conditions improve.

4.1.5 Use form 968-26051, WNP-2 Public Address Emergency Message Format - Exclusion Area Evacuation to complete a public address announcement.

NOTE: The EOF Manager, if acting as Emergency Director, must coordinate with the TSC Manager to have PA announcements made.

4.1.6 Immediately repeat the announcement. Continue repeating the announcement periodically while the evacuation remains in effect and until the TSC is activated. The TSC will assume responsibility for PA announcements when activated.

4.1.7 Direct the Security Manager (or Security Supervisor if Security Manager is not yet activated) to implement their actions for Exclusion Area evacuation.

4.2 Security Manager Responsibilities

4.2.1 Direct the Secondary Alarm Station Operator broadcast over Energy Northwest Maintenance and Security Radio Channels:

a. The Exclusion Area is being evacuated.

b. That Exclusion Area personnel not assigned emergency duties report home or to the designated assembly location.

- Specify alternate assembly area, if designated, and any known hazards/areas to avoid

4.2.2 Direct the SCC Duty Officer to activate the "Crossroads" Exclusion Area evacuation siren.

4.2.3 If an assembly area is established, direct the Site Security Supervisor to dispatch an officer with radio to the assembly area to assist with accountability or message relay.

4.2.4 Provide telephone evacuation notification and the above instructions to the following:

WNP-1 Emergency Manager/Site Manager - Day Shift
WNP-1 Designated Site Authority - Back Shifts

NOTE: The Roving Security Patrol responds to the WNP-1 gate as resources are available. Their function is to be prepared to sound the alarms to evacuate the site to the designated assembly area.

Circulating Pumphouse
Visitor's Center
Waste Water Treatment Plant
Security Training Facility
Plant Maintenance Training

4.2.5 Keep the Emergency Director informed on the status of the Exclusion Area Evacuation.

4.3 Security Supervisor Responsibilities

4.3.1 Direct a Security Officer to the designated assembly area if established to perform accountability duties per PPM 13.7.5.

4.3.2 Instruct the officer at the assembly area to communicate on the Security area wide radio channel to coordinate accountability and relay messages.

4.3.3 Direct the mobile patrol to perform a visual check of evacuation progress within the Exclusion Area Boundary, including the Security Firing Range and that portion of the Owner Controlled Area outside the Exclusion Area boundary. Refer to Attachment 5.1.

4.4 Offsite Agency Coordinator Responsibilities

4.4.1 Contact the FFTF Control Room and inform them of Exclusion Area evacuation PADs made by Energy Northwest.

4.5 Radiological Emergency Manager Responsibilities

4.5.1 Determine if an offsite release is in progress.

4.5.2 If an offsite release is in progress, evacuees should be directed to report to the ENOC assembly area.

4.5.3 If no offsite release is in progress, evacuees should be directed to report to their home.

4.5.4 Contact the TSC Radiation Protection Manager (RPM) to coordinate the appropriate evacuation actions.

4.5.5 In the event of an Exclusion Area evacuation requiring personnel to report to the ENOC, dispatch an HPC staff member to set up the assembly area. Refer to PPM 13.7.5 for guidance regarding setup and operations of the assembly area.

## 5.0 ATTACHMENTS

5.1 Exclusion Area Map

# EXCLUSION AREA MAP
Includes Owner Controlled Area

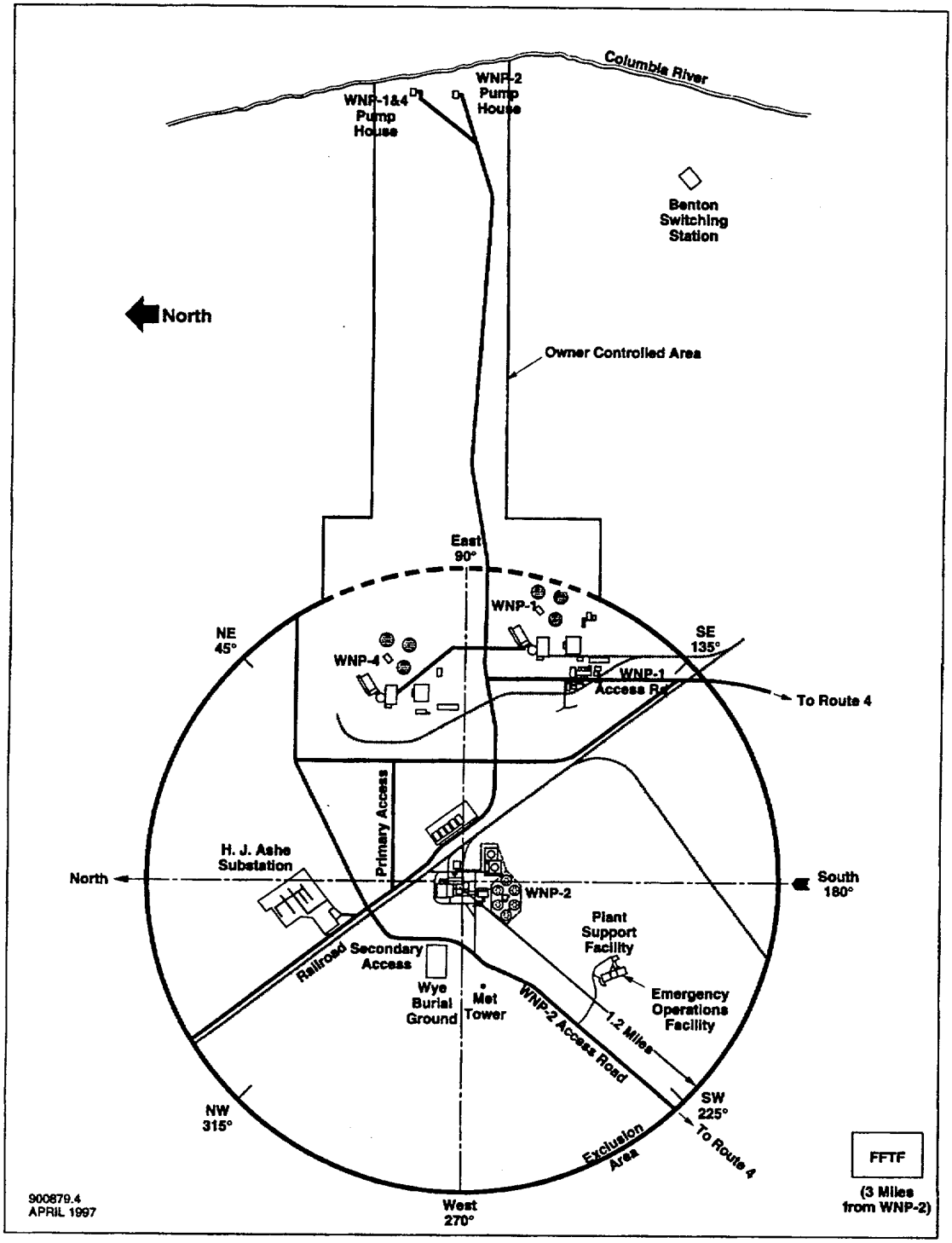


Attachment 5.1

| ENERGY NORTHWEST | | USE CURRENT REVISION |
|---|---|---|
| COLUMBIA GENERATING STATION<br>PLANT PROCEDURES MANUAL | | |
| PROCEDURE NUMBER<br>*13.9.1 | APPROVED BY<br>DWC - Revision 25 | DATE<br>09/06/00 |
| VOLUME NAME<br>EMERGENCY PLAN IMPLEMENTING PROCEDURES | | |
| SECTION<br>ENVIRONMENTAL FIELD MONITORING AND SAMPLING | | |
| TITLE<br>ENVIRONMENTAL FIELD MONITORING OPERATIONS | | |

TABLE OF CONTENTS


Page

1.0 PURPOSE . . . . . 2

2.0 REFERENCES . . . . . 2

3.0 PRECAUTIONS AND LIMITATIONS . . . . . 3

4.0 PROCEDURE . . . . . 3

4.1 Field Team Coordinator Duties . . . . . 3
4.2 Field Team Dispatcher Duties . . . . . 6
4.3 Environmental Field Team Member Duties . . . . . 7

5.0 ATTACHMENTS . . . . . 11

5.1 Radiation Survey Instruments: Battery and Response Checks . . . . . 13
5.2 Radio, Cellular Phone and GPS Operation Instructions . . . . . 18
5.3 Field Radiation Surveys (General Area and Ground Contamination) . . . . . 20
5.4 Portable Air Sampling Instructions . . . . . 22
5.5 Sample Identification Form (968-19234) Instructions . . . . . 26
5.6 Air Sampling Worksheet . . . . . 27
5.7 Environmental TLD and Fixed Air Sample Retrieval Instructions . . . . . 28
5.8 Field Team Coordinator Checklist . . . . . 30
5.9 Field Team Briefing Worksheet . . . . . 32
5.10 Field Team Kit Replenishment Log . . . . . 33

## 1.0 PURPOSE

This procedure provides those individuals involved with Environmental Field Team (EFT), or Field Team, operations with instructions for responding to radiological emergencies at Energy Northwest nuclear facilities. The Environmental Field Teams will confirm radiological releases through actual measurements in the field to determine the extent of plume travel and contamination spread. Sampling and field analysis will be conducted following the instructions contained in attachments to this procedure.

## 2.0 REFERENCES

2.1 FSAR, Chapter 13.3, Emergency Plan, Sections 2, 5

2.2 CI 4.10, WNP-2 Environmental Thermoluminescent Dosimeter (TLD) Distribution and Collection

2.3 CI 4.11, Trip Directions to TLD Stations

2.4 CI 4.12, Airborne Samples Distribution, Collection and Shipping

2.5 CI 4.13, Trip Directions to Environmental Air Sampler Stations

2.6 PPM 13.2.1, Emergency Exposure Levels/Protective Action Guides

2.7 PPM 13.9.5, Environmental Sample Collection

2.8 PPM 13.9.8, River Evacuation Monitoring

2.9 PPM 13.13.4, After Action Reporting

2.10 PPM 13.14.4, Emergency Equipment

2.11 Sample Identification Form, 968-19324

2.12 Emergency Response Log, 968-23895

2.13 Field Team Dispatch and Tracking Worksheet, 968-25815

2.14 Ten Mile EPZ Field Team Summary Map, 968-25130

2.15 Field Team Radiation Survey Data, 968-26097

## 3.0 PRECAUTIONS AND LIMITATIONS

3.1 Environmental air sampling should be performed sufficiently downwind and not closer than 1.2 miles from the plant to minimize dose. All field team personnel should be instructed to contact MUDAC prior to entering the plume and should be made aware of expected dose rates. Air sampling should not be conducted in fields greater than 2 rem/hr.

3.2 When driving off-road during the dry summer months, Field Team personnel should be aware of the potential for grass fires started by the vehicle's hot exhaust.

3.3 Due to the potential hazard of explosion or fire, adhere to good safety practices when obtaining environmental air samples by connecting the sampler's positive battery terminal lead first, then connecting the negative lead to a ground away from the battery's negative lead cable post (a ground connection can be any metal object within the vehicle's engine compartment). When completed air sampling, disconnect the negative lead first.

3.4 Field Team personnel need to be aware of the potential for heat stress problems when dressed in protective clothing on a hot summer day. The Field Team Coordinator should request a Safety Representative be called out for advisory purposes if this is perceived to be a potential problem.

## 4.0 PROCEDURE

### 4.1 Field Team Coordinator Duties

NOTE: The Field Team Coordinator checklist (Attachment 5.8) is provided for guidance.

4.1.1 Provide overall direction of environmental field teams. Coordinate each organization's team activities with the responsible agency for their respective area:

a. Exclusion Area Boundary -- Energy Northwest

b. Hanford Reservation -- Energy Northwest and DOE-RL

c. Outside the Hanford Reservation -- Energy Northwest and Washington State Department of Health

d. Oregon -- Oregon Department of Energy

4.1.2 Assign each field team deployed an identification number for use in communications and reporting (e.g., EN-1, EN-2, DOE-1, DOE-2, etc.).

4.1.3 Interface with the Dose Projection Health Physicist (DPHP) to determine the following:

a. Projected release path.

b. Areas which may require surveys, air sampling, or environmental sampling to verify plume location and deposition.

c. Emergency worker dose correction factor. The REM may need to be consulted for this information.

- the emergency worker dose adjustment factor should be multiplied by the PIC reading to determine total exposure.

4.1.4 Determine current year-to-date (YTD) dose of each Energy Northwest field team member. Using a dose projection computer, double click on the "Run Exposure Report" icon. This will download the most recent exposure report to the computer.

a. Double click on the "View Exposure Report" icon. This will display a list of all Energy Northwest personnel and their exposure history. Scroll to the desired name or select "Edit" and use the "Find" option.

b. Close the window when all desired records have been obtained.

4.1.5 Log each field team member's current year-to-date (YTD) dose, available dose, electronic dosimeter number, and the emergency worker dose correction factor in the Emergency Worker Dose Worksheet Section of the Field Team Dispatch and Tracking Worksheet (Form 968-25815). Available dose is 5000 mrem minus current YTD dose.

4.1.6 If necessary, request a support person or additional field team member to assist with recording incoming field team data.

4.1.7 Perform initial briefing of field teams prior to dispatch per Attachment 5.9.

a. Initial briefings should include individual exposures and limits.

b. Obtain field team vehicle license and cell phone numbers, and record them on the briefing guide.

4.1.8 Direct the Field Team Dispatcher in the control and routine briefing of field teams after they are dispatched.

4.1.9 Develop an initial plan of action to detect radiological effluent releases through the use of field teams taking into account computer generated data on current and potential effluent release exposure areas.

> CAUTION: Environmental air sampling should be performed sufficiently downwind to minimize dose. All field team personnel should be instructed to contact MUDAC prior to entering the plume and should be made aware of expected dose rates. Air sampling should not be conducted in fields, projected or actual, greater than 2 rem/hr.

4.1.10 During initial deployment, position field teams per the following guidelines:

a. Locate one field team downwind in close proximity to the plant (about ½ mile depending on wind conditions). Use grid locations rather than GPS coordinates when field teams are close to the plant.

b. Locate the other field teams farther downwind.

4.1.11 When a radioactive release is confirmed:

a. Dispatch field teams to traverse at designated distances (i.e., 1.2, 5, and 10 miles) and verify dose rate levels above 100 microrem/hr.

b. Upon identification of a radioactive plume, commence air sampling activities.

c. Identify plume centerline and boundaries (i.e., 100 microrem/hr).

4.1.12 Direct field teams to contact the Field Team Coordinator for further instructions when they have located the plume boundary and prior to entering the plume for additional readings.

4.1.13 Keep the DPHP informed of field monitoring results.

4.1.14 Reposition field teams as necessary to track the plume's leading edge, the side boundaries and, when the release terminates, the trailing edge.

4.1.15 Consult with the REM to determine when an environmental air sample is necessary to determine specific isotopic content of the plume. If so, direct the field team to enter the plume and obtain the air sample keeping exposures ALARA. Air samples should be taken at least 1.2 miles downwind.

a. Electronic dosimeters for field team members are set to alarm at 500 mrem pre hour. Direct field team members to leave the plume and contact you for guidance if their dosimeters go into alarm.

4.1.16 Periodically request dosimeter readings of field team members to assure personnel do not exceed Energy Northwest guides. The Emergency Worker dose limit is 5 rem TEDE, minus any accumulated dose. Ensure dosimeter readings are logged on the Field Team Dispatch and Tracking Worksheet (Form 968-25815).

4.1.17 Maintain up-to-date 10 mile and 50 mile MUDAC Field Team display maps, showing field team locations, and showing field team radiological monitoring results. Update Field Team Summary Maps (968-25130) as needed.

4.1.18 Periodically, or as requested, provide completed Field Team Summary Maps (Form 968-25130) to the REM.

4.1.19 When directed to assist with river evacuation monitoring, dispatch a field team to implement PPM 13.9.8.

4.1.20 Notify field teams when decisions are made to take KI, or to implement other protective measures.

4.1.21 Arrange for replacement of field team instrumentation or supplies when needed.

4.1.22 Upon shift change, brief your relief on current status of the emergency and field team activities.

4.1.23 Upon shift change or termination of the emergency:

a. Prepare an individual After Action Report. Refer to PPM 13.13.4.

b. Collect Field Team Kit Inventory Sheets and After Action Reports from all field teams.

c. Deliver After Action Reports to the DPHP.

4.2 Field Team Dispatcher Duties

4.2.1 Assign and dispatch field teams as directed and record data on the Field Team Dispatch and Tracking Worksheet (Form 968-25815).

4.2.2 Maintain radio contact with field teams and enforce radio discipline and good practices.

4.2.3 When significant changes occur during the emergency, complete a Field Team Briefing Worksheet (Attachment 5.9), conduct a roll call of all field teams and provide a radio briefing of worksheet information. Record field team acknowledgment following the briefing.

a. Continue to follow up with any teams that fail to acknowledge the briefing. The Washington field team coordinator should be informed of state teams not receiving the briefing.

4.2.4 When directed, notify field teams of any Protective Action Decisions (PADs) affecting the field teams or the public.

4.2.5 Periodically request dosimetry readings from field team members to ensure they are within limits and notify the Field Team Coordinator of results.

4.2.6 Maintain radio communications capability until all field teams have returned to the Plant Support Facility.

4.2.7 Act as Field Team Coordinator when requested.

4.2.8 Upon shift change, brief your relief on the current status of the emergency and field team activities.

4.2.9 Upon shift change or termination of the emergency:

a. Prepare an individual After Action Report. Refer to PPM 13.13.4.

b. Deliver After Action Report, and logs to the Field Team Coordinator.

4.3 Environmental Field Team Member Duties

4.3.1 Upon notification of Alert or higher classification, or as directed, proceed to the Emergency Operations Facility, or if directed, to Energy Northwest Alternate EOF at the MPF, and report to the Radiological Emergency Manager or Field Team Coordinator.

NOTE: If none of the above personnel are present, proceed with those procedure steps listed for getting field team equipment ready for use. Check back with one of the listed personnel when ready for dispatch.

4.3.2 Sign in on the EOF staffing board designated for listing field team members and obtain a field team identification designator number (i.e., EN-1, EN-2, etc.).

NOTE: Additional field team kits and the River Evacuation and Monitoring Kits are located outside Room 201 of the MPF. Keys for the cabinet are located in the glass front key box on the wall adjacent to the Room 201 door. Enter the MPF via the southeast keycard sliding door.

4.3.3 The first team member to arrive at the EOF should retrieve the Field Team Emergency Cabinet keys (key to the First Aid Room for entry to the ambulance bay, and the key to the field team radio cabinet) from the red key box on the EOF Field Team Supply Cabinet.

4.3.4 Obtain keys for the Energy Northwest designated field team vehicles from the EOF Field Team Supply Cabinet.

NOTE: Two of the designated field team vehicles are pool vehicles. One is normally located at Building 11. The second vehicle is usually located on the east side of Building 64. Use of another Energy Northwest or personal vehicle may be required to obtain these vehicles. Keys to all four designated field team vehicles are located in the EOF Field Team Supply Cabinet.

4.3.5 Obtain bundled Field Team Document Packet of Maps, Forms and Procedures, and a GPS unit from the EOF Field Team Supply Cabinet.

NOTE: The electronic dosimeter dose rate alarm is set to 500 mrem per hour. The dose alarm is set to 1800 mrem. If the dosimeter goes into alarm, immediately leave the area and contact the Field Team Coordinator.

4.3.6 Obtain an electronic dosimeter from the EOF Field Team Cabinet. To activate the dosimeter, press the button on the side.

4.3.7 Report to the Ambulance Bay and unlock the following:

a. Field Team Emergency Cabinets #1 through #3 (PSF Ambulance Garage). Leave the key in the last lock.

b. Radio Charger Cabinet (PSF Room 118A - by decon shower).

4.3.8 Obtain field team equipment from the designated cabinets which includes the following:

NOTE: The combination to the field team kits is 911.

a. Protective Clothing Kit

b. Instrumentation Kit

c. Ribboned Stakes for marking sample locations

d. Air Sampling Kit

a. Field Sampling Kit

b. Field Team Portable Radios (2) and Spare Batteries (2) located in the Radio Charging Cabinets in PSF Room 118A.

4.3.9 If the inventory seal on any of the kits is broken, inventory the contents of that kit per the PPM 13.14.4 inventory list (located in the Field Team Document Packet) and notify the Field Team Coordinator if anything is missing.

4.3.10 Using the field team radio cabinet key, obtain the source to be used for performing instrument response checks located in the field team source cabinet in Room 118A. The source shall be returned to this cabinet when response checks are complete, and the cabinet locked.

4.3.11 Perform battery and response check, as applicable, on all radiation survey instruments in the instrumentation kit and record the information on the Checklist for Equipment Test, Attachment 5.1, located in the Field Team Document Packet, using the guidance contained in Attachment 5.1 and Attachment 5.2.

4.3.12 After the last Field Team completes instrument checks, return the source to the field team source cabinet, and return the key to the key box on the EOF Field Team Supply Cabinet.

4.3.13 Set up and test air sampler per Attachment 5.4.

NOTE: The field team vehicle radio needs to be turned on for the following step.

4.3.14 When equipment check and vehicle loading is complete, establish radio contact with MUDAC and conduct radio checks, using the vehicle radio and both portable radios. See Attachment 5.2, Radio, Cellular Phone and GPS Operation Instructions, for guidance.

NOTE: If your radio is inoperable, establish contact by phone, or by cellular phone from a Field Team vehicle.

4.3.15 Turn on the GPS unit and verify the following:

a. The page with altitude, clock and position displays. If another page displays, press PAGES and select GROUP A.

b. Batteries are not low. Verify batteries by pressing PAGES, then select STATUS.

4.3.16 Obtain initial deployment assignment from MUDAC, and when directed by the MUDAC Field Team Coordinator, don appropriate protective clothing (PCs), and proceed to assigned location, continuously monitoring radiation levels.

4.3.17 The following Stability Class tables are provided to complement the briefing information received from the Field Team Coordinator.

## STABILITY CLASS TABLE

| Stability Classification | NRC Categories (Stability) |
|---|---|
| Extremely unstable | *A (1)* |
| Moderately unstable | *B (2)* |
| Slightly unstable | *C (3)* |
| Neutral | *D (4)* |
| Slightly stable | *E (5)* |
| Moderately stable | *F (6)* |
| Extremely stable | *G (7)* |

4.3.18 Notify the Field Team Dispatcher upon arrival at your assigned location.

4.3.19 As directed, perform general area surveys, ground contamination surveys and portable air samples following the instructions contained in Attachments 5.3 through 5.6.

4.3.20 Maintain a chronology of significant inputs, actions, events and their resolutions on an already established log, or on the Emergency Response Log (Form 968-23895), for attachment to your After Action Report per PPM 13.13.4.

4.3.21 If directed to perform River Evacuation Monitoring refer to PPM 13.9.8.

4.3.22 If directed to retrieve environmental TLDs and/or fixed air samples, refer to Attachment 5.7.

4.3.23 When relieved at shift change, or termination of emergency event:

a. Brief your relief on responsibilities, duties and current status of actions being performed.

b. Report to the PSF ambulance bay area for survey, and, if necessary, decontamination.

c. Turn in personal dosimetry to the Health Physics Center staff and report to MUDAC for debriefing.

d. Prepare an individual After Action Report per PPM 13.13.4.

e. Deliver After Action Reports to the Field Team Coordinator.

4.3.24 When assigned as relief for the on shift Environmental Field Team Members:

a. Report to the Field Team Coordinator in MUDAC.

b. Receive an update on present conditions, and instructions for relieving the on shift team members.

c. Prior to beginning the assignment, obtain electronic dosimetry from the EOF Field Team Cabinet, and report to the Health Physics Center for a complete set of protective clothing.

d. Obtain replacement radio batteries from the radio charging cabinets in PSF Room 118A if needed.

e. Proceed to the field team location you are relieving, receive briefing and relieve the on shift field team.

f. Perform a battery check on all applicable instrumentation. Complete the Checklist for Equipment Test, Attachment 5.1.

c. Upon return of field team equipment:

a. Restore equipment to correct field team kit container and place in designated cabinet.

b. Refer to PPM 13.14.4, Emergency Equipment, for a list of kit contents. If kits contain the required items, reseal the kits.

c. Complete the Field Team Kit Replenishment Log located on the inside of the field team cabinet door noting any items used out of the kits. Refer to Attachment 5.10.

- Include the replenishment log with your After Action Report.

a. Prepare an Individual After Action Report per PPM 13.13.4.

b. Deliver all logs, data work sheets, and After Action Reports to the Field Team Coordinator.

## 1.0 ATTACHMENTS

5.1 Radiation Survey Instruments: Battery and Response Checks

5.2 Radio, Cellular Phone and GPS Operation Instructions

5.3 Field Radiation Surveys (General Area and Ground Contamination)

5.4 Portable Air Sampling Instructions

5.5 Sample Identification Form (968-19234) Instructions

5.6 Air Sampling Worksheet

5.7 Environmental TLD and Fixed Air Sample Retrieval Instructions

5.8 Field Team Coordinator Checklist

5.9 Field Team Briefing Worksheet

5.10 Field Team Kit Replenishment Log

## RADIATION SURVEY INSTRUMENTS: BATTERY AND RESPONSE CHECKS

Prior to departure from the EOF, all radiation survey instruments should be battery and response checked. The Cesium 137 check source for response checking the instruments is located in the Field Team Source Cabinet inside a lead container. When response checking the instruments you are looking for any indication of an elevated reading.

When response checking the RO-2A (Beta/Gamma Dose Rate Meter) you may need to remove the source from the lead container and check window open in order to see a response. When finished, return the source to its container, and the container to the field team source cabinet. Lock the cabinet to maintain adequate source control, and return the key to the EOF Field Team Supply Cabinet.

1. Ludlum Model 2 Count Rate Meter

The Ludlum Model 2 Count rate meter should be used when measuring gamma and beta radiation to determine Beta and Gamma contamination. It is used to take readings on air sample cartridges and filters. It is also used to detect levels of contamination on samples, equipment and on yourself.

The Count rate meter can be used to differentiate between Gamma and Beta radiation by placing a piece of cardboard over the probe. If uncovered readings are higher than covered readings then this is an indication of the presence of Beta radiation. If there is no difference between the readings, you are seeing only Gamma. An indication of Beta would mean you are in the plume. An indication of only Gamma would mean the plume is overhead.

a. Battery Check

1.1.1 Place Selector switch to BAT. The needle should deflect to BAT TEST portion of the scale.

- If the battery response does not deflect into the BAT TEST portion of the scale, the two D cell batteries should be replaced.

b. Response Check

1.2.1 Attach the HP 260 pancake probe to the count rate meter.

1.2.2 Press the RES button to ensure that scale reading goes to zero.

1.2.3 Set the Selector switch to X1.

1.2.4 Set the F-S switch to fast. The F-S response toggle switch dampens meter response from 3 seconds (F) to 11 seconds (S).

1.2.5 Set the audio toggle to ON

1.2.6 Slowly pass the probe over the surface of the source at about one centimeter.

1.2.7 If the response check was satisfactory; initial, date and check the SAT block on the checklist.

1.2.8 If the instrument fails the response check, contact the HP in the Health Physics Center for assistance.

2. Ludlum Model 3 Micro R Meter

The Ludlum Micro R meter should be used for detection of very low level gamma radiation. This instrument is used to determine plume boundaries (10 times background or approximately 100 micro R) and to determine dose rates. The Micro R meter has a range of 0 to 3000 Micro R/hr. When levels exceeding 2000 Micro R/hr are detected, the RO-2A should be used.

For initial surveys, the meter should be set to the X1 range. The Range selector switch positions for the Micro R meter includes a X0.1 scale. On the meter this indicates a range of 0 to 3 Micro R/hr. Because background is approximately 10 Micro R/hr, this scale will always be pegged.

a. Battery Check

2.1.1 Place Selector switch to BAT. The needle should deflect to BAT TEST portion of the scale.

- If the battery response does not deflect into the BAT TEST portion of the scale, the two D cell batteries should be replaced.

b. Response Check

2.2.1 Press the RES button to ensure that scale reading goes to zero. The RES button should also be pushed when changing ranges to quickly re-zero the meter.

2.2.2 Set the Selector switch to X1.

2.2.3 Set the F-S switch to fast. The F-S response toggle switch dampens meter response from 3 seconds (F) to 11 seconds (S).

2.2.4 Set the audio toggle to ON.

2.2.5 Slowly pass the probe over the surface of the source at about one centimeter.

2.2.6 If the response check was satisfactory; initial, date and check the SAT block on the checklist.

2.2.7 If the instrument fails the response check, contact the HP in the Health Physics Center for assistance.

3. Eberline Model RO-2A Meter

| |
|---|
| CAUTION: The chamber face of the RO-2A is a Beta window of ultra-thin mylar and is covered by a sliding Beta shield to allow Beta/Gamma differentiation. Caution should be taken not to puncture the mylar screen when the Beta shield is open. |

The Eberline Model RO-2A meter should be used once levels of radiation exceed 2000 Micro R/hr detected by the Micro R meter.

The Beta window is moved by first depressing the friction release button located on the side of the instrument case. To slide the window, tilt the case either up or down while depressing the button.

Full instrument response time of the RO-2A is five seconds. This means the meter needle will move from a reading of zero to 90% of full scale in five seconds. To obtain accurate results, the instrument should be moved slowly enough to evaluate the extent of a change in meter reading.

To differentiate between Beta and Gamma radiation, a reading should first be taken with the window open and then with window closed. If there is no difference in readings you are seeing only Gamma. If there is a difference then you are seeing both Gamma and Beta. A reading with both Gamma and Beta detected would indicate that you are in the plume.

a. Battery Check

3.1.1 The RO-2A has two battery checks with two nine volt batteries for each test. Place the Range Selector switch in each BAT position and verify that the meter indicates above the BATT OK mark.

- If the battery response does not deflect into the BAT OK portion of the scale, the nine volt batteries should be replaced.

b. Response Check

3.2.1 Place the Range Selector switch in the ZERO position and adjust ZERO knob until the meter indicates ZERO (0).

3.2.2 Set the Selector Switch to the 0-50 mR/hour position.

3.2.3 With the window open, slowly pass the instrument over the source at about one centimeter. (You may need to remove the source from the lead container to obtain a response.)

3.2.4 If the response check was satisfactory; initial, date and check the SAT block on the checklist.

3.2.5 If the instrument fails the response check, contact the HP in the Health Physics Center for assistance.

## CHECKLIST FOR EQUIPMENT TEST

NOTE: Return the check source to the field team source cabinet and lock the cabinet when done response checking instruments. Return the key to the EOF Field Team Supply Cabinet key box.

| Instrumentation Kit | Serial Number | Initials/Date & Time | Response Check | | Battery Check | |
|---|---|---|---|---|---|---|
| | | | Sat | Unsat | Sat | Unsat |
| Micro R Meter | | | | | | |
| Beta/Gamma Dose Rate Meter (RO-2A) | | | | | | |
| Count Rate Meter/Pancake GM Probe (Frisker/Geiger counter) | | | | | | |
| Portable Radio (Check operability with Field Team Coordinator) | N/A | | N/A | N/A | | |
| Verify Cell Phone operation | N/A | | N/A | N/A | N/A | N/A |
| Global Positioning System (GPS) Unit | | | N/A | N/A | | |
| Check Electronic Dosimeters | N/A | | N/A | N/A | N/A | N/A |
| Return Source to field team source cabinet; lock cabinet; return key to the field team cabinet. | N/A | | N/A | N/A | N/A | N/A |
| | | | | | | |
| Other (Specify) | | | Partic-ulate | Iodine | Cubic Feet | |
| Air Sampler Operational Check | | | | | | |

# RADIO, CELLULAR PHONE AND GPS OPERATION INSTRUCTIONS

1. Radio Operating Procedures

   a. Turn on the radio (vehicle radios must be turned on each time the vehicle is turned off and back on).
   b. Set the frequency selector to the F-1 channel.
   c. Place the speaker toggle switch to normal position (speaker open).
   d. Rotate the squelch control counterclockwise until you receive squelch.
   e. Adjust the volume to desired level.
   f. Rotate the squelch control clockwise until the noise just stops. This is the threshold setting. Do not adjust further. Excessive squelch reduces radio sensitivity. If unable to silence squelch, the battery must be replaced. Contact the Field Team Dispatcher for replacement batteries.

2. Radio Transmitting Instructions

   NOTE: Continuous transmissions lasting longer than approximately 30 seconds will be automatically interrupted by the repeater.

   a. Hold the radio upright with the speaker-microphone grill two or three inches from your mouth.
   b. Do not interrupt another user. If you do, someone will not be heard.
   c. When preparing to transmit, press the talk switch, and wait approximately one second before talking.
   d. Talk in a slow, clear, normal voice, with brief transmissions.
   e. When finished transmitting, release the talk switch to receive.
   f. State the station you are calling first, then state your identification number (e.g., MUDAC this is EN-2, or EN-2 this is WA-3).

3. Cellular Phone Instructions

   a. The cellular phone is activated automatically when the vehicle's ignition switch is in the ON position (vehicle running or not). If the phone does not activate, check the ON/OFF push button on the left side of the stand. It must be IN for operation.

   b. To place a call:

      - Remove the phone from its stand (or leave in the stand to use the remote microphone), enter the phone number you are calling and press the SND key.
      - When the call is complete, press the END key and hold the CLR key until the number you called is removed from the display.

   c. To receive a call:

      - Remove the phone from its stand, or to use the remote microphone, press the SND key to answer the call. Your phone will be disconnected when the calling party hangs up.

Attachment 5.2
Page 1 of 2

# GPS OPERATING INSTRUCTIONS

1. Start up

   a. Attach the cigarette lighter adapter to the GPS unit.
   b. Press the PWR button.
   c. Press EXIT twice to view Altitude, Clock and Position information.
      1) If this information does not display, select PAGES and GROUP A. Press EXIT to close the options window.

2. Obtaining a Position

   a. The unit activation requires the unit to lock onto several satellites. Depending upon the length of time since the last activation, this may take three to five minutes.

3. Viewing Local map

   a. Press PAGES and select MAP 1, using the UP/DOWN arrow.

   b. Use the ZOUT/ZIN to enlarge or decrease the area to be viewed.

   c. Use the arrow keys to move the cross hairs to the desired location.

   d. Press the EXIT button to remove menu overlays.

3. Satellite Status Screen

   a. Appears each time the unit is turned on.

   b. Displays satellite status and a battery level indicator on the lower right.

# FIELD RADIATION SURVEYS

## 1.0 General Area Surveys

1.1 Before entering an affected area, perform a background measurement using the Micro-R Meter and record background reading and time on the Field Team Radiation Survey form, 968-26097.

1.2 As directed by MUDAC, proceed toward the plume using the Emergency Zone Map booklet from the Field Team Kit and GPS unit to determine the location of the plume.

1.3 Using the MicroR meter set on the x1 scale, search for the edge of the plume (defined as ten times background). Increase scales as radiation levels increase.

1.4 When the Micro-R Meter reads 2000 micro-R/hr (2 mrem/hr) or greater, change to the beta/gamma dose rate instrument, RO-2A.

NOTE: If your electronic dosimeter goes into alarm, immediately leave the area and contact the Field Team Coordinator. The dosimeter will reset when the dose rate returns to a level less than 500 mrem per hour.

1.5 When directed by MUDAC, traverse the plume constantly monitoring radiation levels and record locations, dose rates and other required information for the plume centerline and edges on form 968-26097 (indicate type of survey by G for general area). Proceed until the other edge of the plume is identified.

1.6 If the dose rate is greater than 2 mrem/hr, use the beta/gamma dose rate instrument to tell if you are in the plume or just seeing plume shine as follows:

NOTE: All open and closed readings must be done in the same location and not from a moving vehicle. Consider ALARA practices in choosing how many readings to take.

a. When first entering the plume, and again at centerline, take open and closed window readings at 3 feet and 6 inches above the ground.

b. If the open and closed window readings are approximately the same, then the plume is probably overhead and has not touched down.

c. If the open window reading is higher than the closed window reading, (by approximately 20% or greater) then you are probably in the plume.

d. Record both sets of open and closed window readings.

1.7 If the Micro-R Meter indicates a plume reading of less than 2000 micro-R/hr, you can determine if you are actually in the plume (instead of under it) by repeating Step 1.6 using the Count Rate Meter/GM pancake probe as the instrument, and the cardboard from your notebook as a window.

1.8 Do not stop to report data while in the plume. Report the plume edge and centerline readings and their locations to the Field Team Dispatcher at the earliest possible time.

1.9 Leave the plume area when not taking readings, but leave the instrument turned on at all times for constant monitoring purposes.

1.10 After being in the plume, periodically conduct a survey of yourself and your vehicle using the count rate meter, and if grossly contaminated, advise the Field Team Dispatcher.

2.0 Ground Contamination Surveys

2.1 As directed by the Field Team Dispatcher, perform a ground contamination survey:

a. Select small area of level ground (3′ x 3′) with minimal vegetation.

NOTE: The detector probe should not be allowed to touch the ground or come in contact with potentially contaminated vegetation.

b. Using the Micro-R Meter and the count rate meter, take readings at ground level (1-2 inches (5 cm) above the surface) and at waist level, approximately 3 feet above the ground.

c. If Micro-R Meter readings are above 2000 micro-R/hr, use the dose rate meter and repeat ground level and waist level readings at the same locations.

d. If ground level reading is higher than waist level reading, assume the ground to be contaminated.

2.2 Record all four readings on the Field Team Radiation Survey Data Form, 968-26097 (indicate the type of survey by C for contamination).

2.3 Repeat the ground contamination survey in several locations.

2.4 Select the highest set of readings and report them to the Field Team Dispatcher.

# PORTABLE AIR SAMPLING INSTRUCTIONS

> WARNING: Environmental air sampling should be performed sufficiently downwind to minimize dose. All field team personnel should be instructed to contact MUDAC prior to entering the plume and should be made aware of expected dose rates. Air sampling should not be conducted in fields, projected or actual, greater than 2 rem/hr and closer than 1.2 miles from the plant.

## Portable Air Sampler Setup and Operational Test

1. Monitor your exposure during performance of this Attachment.

> WARNING: Potential hazard of explosion or fire during connection of the sampler's leads to the vehicle's battery terminals exists.

2. Obtain the air sampler, cartridge and particulate filter.

3. If not already marked, mark a charcoal or silver zeolite (AgZ) cartridge with an arrow to indicate the direction of the air flow.

4. Insert the cartridge and a clean two-inch filter paper, (spongy side facing outward), into the air sample head. Refer to the diagram in this Attachment.

5. Connect the sampler's positive lead to the vehicle's battery first, then connect the negative lead to a ground away from the battery's negative terminal. A ground connection can be any metal object within the vehicle's engine compartment. Leave vehicle engine running while operating the air sampler to assure constant voltage.

6. Turn the air sampler on. Determine initial flow rate from the rotometer on the side of the air sampler. Note the flow rate information on the Sample Identification Form 968-19324.

7. If the flow rate is less than one or greater than five CFM, the air sampler is inoperable. Contact the Field Team Coordinator for further instructions, or obtain an new air sampler and retest.

8. Based on air sampler flow rate, determine the sample time necessary to obtain a sample of 10 cubic feet.
9. When the air sampling test is complete, disconnect the negative lead first, then the positive lead.

Obtaining an Air Sample

NOTE: Air sampler preparation (sample head assembly) and paperwork initiation should be performed outside the plume.

11. When directed by MUDAC, collect an environmental air sample in accordance with the following instructions:

12. Proceed to assigned sample location.

13. Ensure the following conditions of operation are met:

    - If at all possible, do not place sampler on a known contaminated surface
    - Keep sampler away from vehicle exhaust gases
    - Do not point air sampler inlet toward any object which may restrict air flow
    - Do not stand in front of sampler inlet when running or allow loose clothing to restrict air flow

14. Connect the sampler's positive lead to the vehicle's battery first, then connect the negative lead to a ground away from the battery's negative terminal. A ground connection can be any metal object within the vehicle's engine compartment. Leave vehicle engine running while operating the air sampler to assure constant voltage.

15. Turn the air sampler on.

16. If the flow rate is less than one or greater than five CFM, the air sample will be invalid. Leave the plume and contact the Field Team Coordinator for further instructions.

17. Perform area dose rate survey for sample location.

18. Record start flow rate, sample start time and sample location dose rate on the Sample Identification Form (Form 968-19324).

19. Upon completion of sampling, note stop flow rate and sample stop time, then turn off and disconnect sampler per step 9.

20. Leave the area of the plume to complete your documentation following the instructions in Attachment 5.5.

21. Label the plastic bags for the filter and charcoal cartridges with the sample identification number, location, date, and time collected.

22. If using charcoal cartridge vs. Silver Zeolite, purge noble gases by reconnecting air sampler to vehicle battery and drawing clean air through filter and cartridge for a minimum of 2 minutes.

23. Disassemble sample head to allow access to the particulate filter and the cartridge.

24. Determine filter and cartridge dose rate or count rate by placing the appropriate instrument detector on the inlet side of the filter or cartridge.

25. Record sample readings on Sample Identification Form (968-19324) and report to Field Team Coordinator.

26. Remove the filter (using tweezers) and the cartridge from sample head and place filter and cartridge in separate plastic bags then seal bags.

27. Survey team members for contamination. If contaminated, advise the Field Team Dispatcher.

28. Transport the samples, with Sample Identification Forms, as directed by the Field Team Coordinator. Ensure that particulate filters and the corresponding cartridges are transported together and that Sample Identification Forms accompany the samples.

SAMPLE HEAD DIAGRAM

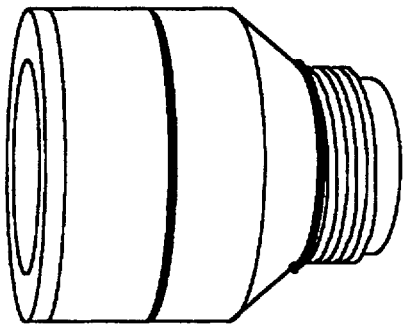

**Sample Head - Assembled**

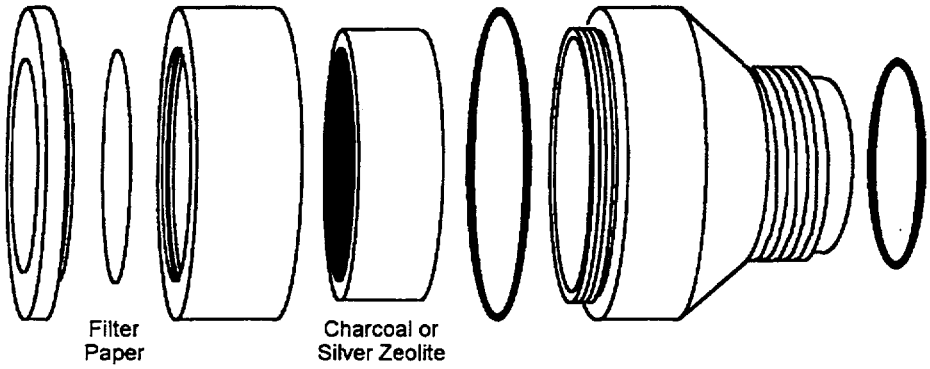


**Sample Head - Disassembled**

970713
Nov 1997

**Filter Cartridge and Sample Head for High Volume Air Sampling Pumps**
**Model CFH-30**

Attachment 5.4
Page 4 of 4

## SAMPLE IDENTIFICATION FORM (968-19234) INSTRUCTIONS

1. SAMPLE IDENTIFICATION FORM

List one sample per form. For air samples, use one sample form and one sample identification number for both the cartridge and particulate filter. Attach one copy of the form to the cartridge and one to the particulate filter.

2. SAMPLE IDENTIFICATION NUMBER DESIGNATION

SAMPLE ID NUMBERS will be in a two segment alpha-numeric code using the following format:

| FIELD TEAM | SEQUENCE |
|---|---|
| AA0 | 000 |

| FIELD TEAM CODES | SEQUENCE |
|---|---|
| Use a two-letter and single number designator, (e.g., EN-1 for Energy Northwest Field Team 1). | Use sequential numbers for each team throughout an event, (e.g., 003 for the third sample taken by a given team). |

3. SAMPLE TYPE

Describe the type of sample being collected-air, soil, vegetation, water, etc.

4. FIELD TEAM SAMPLE LOCATION/DESIGNATION

Use sample station numbers where they exist, such as continuous environmental air sampling stations (e.g., Sample Station 3). Where no sample station number exists, as in emergency field samples, enter the GPS location.

# AIR SAMPLING WORKSHEET

Sample No. _____

Analysis Time _____

Analyst _____

1. Cartridge Filter: AgZ Filter ☐ Charcoal Filter ☐

(Sample CPM _____) - (Background CPM_____ ) = Net CPM_____

$$\frac{\text{Net CPM}}{(1.89 \times 10^8) \times (\text{sample volume ft}^3)} = _____ \ \mu\text{Ci/cc I Activity}$$

NOTE 1: $1.89 \times 10^8 = 0.003\ (\text{eff}) \times 2.83 \times 10^4\ \text{cc/ft}^3 \times 2.22 \times 10^6\ \text{dpm}/\mu\text{Ci}$

NOTE 2: If using charcoal cartridge, ensure cartridge is purged of noble gases.

2. Particulate Filter

(Sample CPM _____) - (Background CPM_____ ) = Net CPM_____

$$\frac{\text{Net CPM}}{(5.65 \times 10^9) \times (\text{sample volume ft}^3)} = _____ \ \mu\text{Ci/cc Particulate Activity}$$

NOTE: $5.65 \times 10^9 = 0.09\ (\text{eff}) \times 2.83 \times 10^4\ \text{cc/ft}^3 \times 2.22 \times 10^6\ \text{dpm}/\mu\text{Ci}$.

Attachment 5.6

# ENVIRONMENTAL TLD AND FIXED AIR SAMPLE RETRIEVAL INSTRUCTIONS

## 1.0 ENVIRONMENTAL TLD RETRIEVAL

Radiological Emergency Manager/Field Team Coordinator Duties

1.1 Consult with the Washington DOH representative at the Emergency Operations Facility (EOF) and determine the need for collection and replacement of environmental TLDs during the emergency.

NOTE: If possible, involve the Radiological Environmental Monitoring Program (REMP) Supervisor in any nonscheduled collection or deployment of environmental TLDs.

1.2 When collection is determined advisable, dispatch an experienced REMP staff member as part of an Environmental Field Team, to replace the ANNUAL TLD badges at selected locations as described in CI 4.10 and CI 4.11.

NOTE: Copies of CI 4.10 and CI 4.11 are in the document packet of the Environmental Field Team kit located in the MUDAC emergency supply cabinet.

REMP Staff Member Duties

1.3 Contact the Energy Northwest TLD Administrator to obtain replacement environmental TLDs for distribution.

1.4 Ensure that the required number of TLDs are provided for each exchange group as directed by the Radiological Emergency Manager (REM).

1.5 Contact the Field Team Coordinator regarding radiological conditions in the field, and follow his/her directions on individual radiation protection measures.

1.6 Proceed to the TLD stations as directed by the Field Team Coordinator.

1.7 Exchange only the ANNUAL TLDs.

1.8 When the TLDs have been exchanged, return to the Health Physics Center and turn them in to the Health Physics Center Staff for processing.

## 2.0 FIXED AIR SAMPLE RETRIEVAL

Radiological Emergency Manager/Field Team Coordinator Duties

2.1 Consult with the Washington DOH representative at the EOF and determine the need for collection of fixed air samples during the emergency.

NOTE: If possible, involve the REMP Supervisor in any nonscheduled collection of fixed air samples.

2.2 If collection is determined advisable, dispatch experienced REMP personnel as part of an Environmental Field Team to collect air samples at selected locations in accordance with CI 4.12 and CI 4.13.

NOTE: Copies of CI 4.12 and CI 4.13 are in the document packet of the Environmental Field Team kit located in the MUDAC emergency supply cabinet.

REMP Staff Member Duties

2.3 Contact the Field Team Coordinator regarding radiological conditions in the field and follow his/her directions on radiation protection measures to be taken.

2.4 Proceed to the fixed air sample stations as directed by the Field Team Coordinator.

2.5 Collect the air samples.

NOTE: If the emergency involved a radioactive release, calculations of the volume of air sampled may need to be restricted to the time during which the plume or puff was over the station. Request guidance from the Field Team Coordinator if the fixed air sample was in the path of a release during the sampling period.

2.6 When the air samples have been collected, return to the Health Physics Center and turn them in to the Health Physics Center Staff for processing.

## FIELD TEAM COORDINATOR CHECKLIST

DATE_____

| | Actions | Time Completed | Initials |
|---|---|---|---|
| 1. | Sign in on board, obtain supply drawer from EOF supply cabinet, and notify the REM of your availability. | _____ | _____ |
| 2. | Brief the field team coordinators from other agencies supplying field teams and reach a consensus about management of their field teams. | _____ | _____ |
| 3. | Determine current year-to-date exposure of Energy Northwest field team members prior to deployment. | _____ | _____ |
| 4. | Assign field team members and a designate team identification number (one HP and one non HP per team, if possible). | _____ | _____ |
| 5. | Ensure field teams have transportation and other equipment. | _____ | _____ |
| 6. | Direct the Field Team Dispatcher(s) to brief the teams approximately each 30 minutes on current radiological projections or other appropriate information about emergency conditions. | -ongoing- | |
| 7. | If necessary, assign an individual to act as field team recorder. | _____ | _____ |
| 8. | Interface with the Dose Projection HP to determine projected plume path and emergency worker dose factor. | -ongoing- | |
| 9. | Develop a strategy for assigning Field Teams initially, verifying plume path, and dealing with EOF inaccessibility. | -ongoing- | |
| 10. | Direct field teams to perform field surveys per field team survey instructions contained in this procedure. | -ongoing- | |
| 11. | Provide completed Field Team data summary maps to the Dose Projectionist Health Physicist (DPHP) as new information is developed. During rapidly changing conditions, try to do this at least every 30 minutes. | -ongoing- | |
| 12. | Provide field team air sample data to the Dose Projection Health Physicist (DPHP) for use in calculating dose projections. | -ongoing- | |
| 13. | If requested to assist with river evacuation monitoring, implement PPM 13.9.8 (kits are in MPF). | _____ | _____ |
| 14. | Direct the dispatcher to periodically ask for field team dosimetry readings. Keep exposure ALARA. | -ongoing- | |

| | Actions | Time Completed | Initials |
|---|---|---|---|
| 15. | Arrange for field team replacement supplies, as necessary. | -ongoing- | |
| 16. | Provide completed Field Team Summary Maps to the REM. | -ongoing- | |
| 17. | Notify field teams when decision is made to recommend KI. | _____ | _____ |
| 18. | Upon shift change or change to State control, brief replacements. | _____ | _____ |
| 19. | Upon shift change or termination of the emergency: | | |
| a. | Prepare an individual After Action Report. Refer to PPM 13.13.4. | _____ | _____ |
| b. | Deliver After Action Report, logs, and all field team work sheets to the REM. | _____ | _____ |

FIELD TEAM BRIEFING WORKSHEET

Date _____

Time _____

Plant Status: _____

_____

Initial Briefing: 1) Cell Phone: EN-1:_____ EN-2:_____ EN-3:_____

2) YTD Exposures: _____ _____ _____

_____ _____ _____

Safety Concerns: _____

Emergency Classification: _____

Release Point: _____ Release Type: _____

Environmental Release Time: _____ Duration:_____

Projected Dose/Location: _____

Weather: Wind Direction From: _____ Speed:_____

Forecast: _____

PAD for Public: _____

_____

RADIOLOGICAL ASSESSMENT

Expected Conditions: __Hi Rad __Hi Contamination __Hi Airborne

Protective Clothing: __None __Single

Exposure Limitations: Individual Dose Limits____

Dose/Dose Rate to Notify MUDAC:____

Roll Call/Acknowledgment:

| TEAM NO. | ACKNOWLEDGED AT: (Time) | COMMENTS |
|---|---|---|
| | | |
| | | |
| | | |
| | | |
| | | |
| | | |
| | | |
| | | |
| | | |

Attachment 5.9

# FIELD TEAM KIT REPLENISHMENT LOG

Date _____ Team Members _____

FIELD TEAM MEMBERS: List below the items used from each kit during the drill/event so that the kits can be restocked appropriately. Include the completed log with your After Action Report.

INSTRUMENTATION KIT:

_____
_____
_____
_____
_____

AIR SAMPLING KIT:

_____
_____
_____
_____
_____

PROTECTIVE CLOTHING KIT:

_____
_____
_____
_____
_____

FIELD SAMPLING KIT:

_____
_____
_____
_____
_____

MISCELLANEOUS (FORMS, MAPS, PROCEDURES, ETC.)

_____
_____
_____
_____

Return electronic dosimeters to the HP Technician in the HP Center for TES updates.

Attachment 5.10

DATE 09/06/00

# EDITORIAL

## 13.10.1

## 1.0 PURPOSE

To describe the responsibilities of the Shift Manager, Control Room Operators, and Shift Technical Advisor, and actions to be taken in the event it becomes necessary to activate and operate the Control Room as an emergency response facility during an emergency.

## 2.0 REFERENCES

2.1 10CFR50.72, Immediate Notification Requirements for Operating Nuclear Power Reactors {R-1932}

2.2 10CFR50, Appendix E (IV)(A) {R-5695, R-5708}

2.3 FSAR, Chapter 13.3, Emergency Plan

2.4 Technical Specification 5.1.2 {R1343}

2.5 OER 79071C, Unauthorized Forced Entry into the Protected Area at Three Mile Island Unit 1 on February 7, 1993

2.6 PPM 1.3.1, WNP-2 Operating Policies, Programs, and Practices

2.7 PPM 1.9.14, Onsite Medical Emergencies

2.8 ABN-RAD-CR, Control Room HVAC High Radiation

2.9 PPM 5.7.1, Severe Accident Guidelines

2.10 Technical Memorandum 2117, Technical Support Guidelines for Core Thermal Engineer

2.11 PPM 13.1.1, Classifying the Emergency

2.12 PPM 13.10.2, TSC Manager Duties

2.13 PPM 13.2.1, Emergency Exposure Levels/Protective Action Guides

2.14 PPM 13.2.2, Determining Protective Action Recommendations

2.15 PPM 13.4.1, Emergency Notifications

2.16 PPM 13.5.1, Localized and Protected Area Evacuations

2.17 PPM 13.5.3, Evacuation of Exclusion Area and/or Nearby Facilities

2.18 PPM 13.5.5, Personnel Accountability, Search and Rescue

4.1.17 For termination of emergency:

a. Collect the individual After Action Reports prepared by staff personnel.

b. Prepare an individual After Action Report as per PPM 13.13.4.

c. Deliver all After Action Reports to the Operations Manager.

4.2 Control Room Supervisor Actions

4.2.1 Advise the Shift Manager of abnormal conditions and perform duties as directed.

4.2.2 Take actions to terminate the conditions causing the emergency.

4.2.3 Continuously monitor the Control Room habitability in accordance with ABN-RAD-CR.

NOTE: If you initiate ABN-RAD-CR while the TSC is occupied, notify the TSC Manager that an air stagnation condition will exist.

4.2.4 If the TSC is determined to be uninhabitable, initiate TSC isolation actions specified in ABN-RAD-CR.

4.2.5 In the absence of the Shift Manager or higher authority, assume Shift Manager responsibilities, including Emergency Director responsibilities and authority as per Section 4.7. {R1343}

4.2.6 Direct the activities of Control Room Operators and Equipment Operators.

4.2.7 Refer any incoming media calls to the Joint Information Center.

4.3 Control Room Operator Actions

4.3.1 Recognize unusual plant conditions and take necessary actions under direction of Control Room Supervisor and/or Shift manager to terminate the condition causing the emergency.

4.3.2 Keep the Control Room Supervisor informed of unusual conditions.

4.3.3 Refer any incoming media calls to the Joint Information Center.

DATE 09/06/00

# EDITORIAL

## 13.10.2

- Need to request augmenting staff or offsite assistance
- Evacuation actions for plant personnel

4.2.15 When EAL or PAR changes are identified, notify the EOF Manager.

4.2.16 Direct that plant PA announcements of Emergency Classification changes or cautions to emergency workers about plant hazardous areas are made per steps on Form 968-26045, Emergency Classification or Other Emergency Message.

NOTE: Tasks of an immediate nature should be prefaced by the term "urgent". The Shift Manager has the authority to determine if a task is urgent. The Shift Manager also has final authority in determining the priority of urgent tasks if multiple urgent tasks exist and a question is raised as to which has priority.

4.2.17 Ensure that the Operations Manager, Technical Manager, Maintenance Manager, Radiation Protection Manager, Shift Manager and OSC Manager coordinate the repair team actions necessary to place and maintain the Plant in a stable condition.

4.2.18 If the RPM advises you of TSC radiological airborne activity problems, consider having the Control Room initiate HVAC isolation actions for the TSC specified in ABN-RAD-CR.

4.2.19 If the emergency worker dose limit is projected to exceed 5 REM over the course of the event for TSC staff, confer with TSC staff and determine if selected staff will be directed to continue emergency duties from the Control Room, the EOF, or be evacuated offsite.

4.2.20 For any potential scenario that could pose a threat to emergency response center activation and personnel safety, confer with the Security Lieutenant to determine:

- Appropriate areas for TSC and OSC operations
- Avenues of safe access
- Communications abilities
- The ability of Security to keep the area safe

4.2.21 If you are advised of a personnel injury or death, then:

a. Ensure that transportation to a medical facility is being arranged and next-of-kin notifications occur using guidance found in PPM 1.9.14.

| Response Actions | Time Completed | Initials |
|---|---|---|
| 15. Direct that plant PA announcements of Emergency Classification changes or cautions to emergency workers about plant hazardous areas are made in accordance per Form 968-26045 steps. | _____ | _____ |
| 16. Ensure that the Operations Manager, Technical Manager, Maintenance Manager, Shift Manager, and OSC Manager coordinate repair team actions necessary to place and maintain Plant in a stable condition. | _____ | _____ |
| 17. If the RPM advises you of TSC radiological airborne activity problems, consider having the Control Room initiate HVAC isolation actions for the TSC specified in ABN-RAD-CR. | _____ | _____ |
| 18. If habitability of TSC becomes questionable, confer with TSC staff and determine if selected staff will be directed to continue emergency duties from the Control Room, the EOF, or be evacuated offsite. | _____ | _____ |
| 19. For security contingencies, confer with the Security Lieutenant to determine appropriate areas for TSC/OSC operations, safe routes, communications ability, and the ability of Security to keep the area safe. | _____ | _____ |
| 20. If you are advised of a personnel injury or death, then: | | |
| a. Ensure that transportation to a medical facility is being arranged and next-of-kin notifications occur using guidance found in PPM 1.9.14. | _____ | _____ |
| b. Ensure details of the incident, e.g., individual's name, type of injury, duties when injury occurred, etc., are forwarded to the JIC. | _____ | _____ |
| 21. Conduct periodic update briefings of TSC staff. Refer to Technical Support Center (TSC) Briefing Guidelines (Form 968-25860) located in the TSC. | _____ | _____ |
| 22. Direct the TSC Plant Administrative Manager to make a public address announcement when EOPs are exited and SAGs are entered. | _____ | _____ |

| ENERGY NORTHWEST | | USE CURRENT REVISION |
|---|---|---|
| COLUMBIA GENERATING STATION<br>PLANT PROCEDURES MANUAL | | |
| PROCEDURE NUMBER<br>*13.10.8 | APPROVED BY<br>DWC - Revision 17 | DATE<br>09/06/00 |
| VOLUME NAME<br>EMERGENCY PLAN IMPLEMENTING PROCEDURES | | |
| SECTION<br>PLANT EMERGENCY FACILITIES | | |
| TITLE<br>SECURITY LIEUTENANT DUTIES | | |

TABLE OF CONTENTS


Page

1.0 PURPOSE . . . . . 2

2.0 REFERENCES . . . . . 2

3.0 PROCEDURE . . . . . 2

3.1 Security Lieutenant Responsibilities . . . . . 2

4.0 ATTACHMENTS . . . . . 5

## 1.0 PURPOSE

This procedure defines actions to be taken by the Security Lieutenant in the event of an emergency classification or when an outside request for Energy Northwest assistance has been received.

## 2.0 REFERENCES

2.1 FSAR Chapter 13.3, Emergency Plan, Section 2

2.2 SPIP-SEC-03, Response Team Leader, Owner Controlled Area Mobile Patrol, Mobile and Walk Patrols

2.3 PPM 13.5.1, Localized and Protected Area Evacuations

2.4 PPM 13.5.3, Evacuation of Exclusion Area and/or Nearby Facilities

2.5 PPM 13.5.5, Personnel Accountability, Search and Rescue

2.6 PPM 13.13.4, After Action Reporting

2.7 PPM 13.14.1, Nearby Nuclear Facility Emergencies/Requests For Assistance

2.8 Emergency Center Accountability Log, 968-25691

## 3.0 PROCEDURE

### 3.1 Security Lieutenant Responsibilities

3.1.1 When notification of a nearby nuclear facility emergency is received, or a request for Energy Northwest assistance is received from an outside agency, implement PPM 13.14.1.

3.1.2 Upon notification of an Energy Northwest classified emergency, respond to the Central Alarm Station.

3.1.3 If a second officer is not present or dispatched to the Security Communications Center, dispatch an officer to assist with offsite notifications.

3.1.4 At Unusual Event or higher classification, direct the Central Alarm Station (CAS) to activate emergency card readers by OPENING GROUP 10, (Group Door Open Display).

3.1.5 Contact the Shift Manager or Emergency Director to obtain information on emergency event status, then direct Security response actions accordingly.

3.1.6 Assign an individual to accountability duties for Security Personnel per PPM 13.5.5, and to assist you with telephone information calls to the CAS.

3.1.7 Brief the Shift Manager on security contingency events that could pose a threat to emergency center activation and personnel safety. This briefing should include, but is not limited to:

a. Type or status of the contingency

b. Avenues of safe access to the plant

c. Appropriate areas for TSC and OSC operations

If an evacuation is warranted, determine whether an evacuation of plant personnel would put them at personal risk due to the security contingency, and then brief the Shift Manager.

3.1.8 At Alert or higher classifications:

a. Establish contact with the on call Operations Support Center (OSC) Team Tracker to coordinate security and accountability actions that may be impacted by OSC accident mitigation activities.

b. Dispatch an officer to the EOF Health Physics Center to lock down the Plant Support Facility (PSF) and assist with EOF access control and with evacuation assembly area personnel accountability.

c. Direct the Security Officer to instruct arriving evacuees to record their arrival on the Emergency Center Accountability Log (968-25691).

d. Establish plant access roadblocks and advise Security Officers to:

- Admit personnel with identification of employment with the Energy Northwest, BPA, DOE, Benton or Franklin Counties, State of Washington, NRC, FEMA, FBI and Coast Guard.

- Obtain permission to admit others from the Security Manager or designee.

- When known, advise persons they admit of special instructions for safe routes or avoiding hazardous areas in the area of the plant.

3.1.9 When advised by the TSC Manager that offsite emergency personnel have been requested to respond to the plant site, advise the Secondary Alarm Station (SAS) of the impending arrival.

3.1.10 If Protected Area evacuation, or an Exclusion Area evacuation is directed, implement PPM 13.5.1 or 13.5.3 actions.

3.1.11 Periodically consult with the Radiological Emergency Manager (or, if not yet activated, the Radiation Protection Manager) to insure your roadblocks are in safe locations.

3.1.12 If directed by the Radiation Protection Manager or Radiological Emergency Manager to shelter or administer a thyroid-blocking agent, take the following actions:

a. If sheltering has been ordered, direct Security Force Officers to move inside established structures, or use vehicles for sheltering if structures are not available.

b. If thyroid-blocking agent (KI) is recommended or if respirators are required, delegate an officer to obtain a sufficient amount of KI from storage and distribute to Security Force Officers. Distribute to Security personnel within protected area first.

3.1.13 When evacuation is ordered:

a. Contact the Operations Support Center Manager for the safest route to the Secondary Alarm Station (SAS) and direct the Security Sergeant and one additional CAS/SAS operator to report to the SAS.

b. Notify the Security Manager at the EOF (if activated) of plant security evacuation and set up additional roadblocks or a security perimeter.

c. If the Security Manager is not activated, refer to SPIP-SEC-03, Owner Controlled Area Mobile Patrol, and consult with the Radiation Protection Manager to determine if relocation of roadblocks and a security perimeter is necessary.

d. Direct movements of security officers to establish the new security perimeter and/or roadblocks.

e. Direct evacuees, and those evacuees that may be contaminated, to report to the assembly area for accountability and personnel monitoring. When the Emergency Center Accountability Log (968-25691) is completed at the assembly area, forward it to the Manpower Scheduler in the EOF.

f. Direct that the new Security perimeter not allow anyone access to the plant unless they have TLDs and are authorized plant access by the TSC Manager.

g. Instruct Security Officers at the roadblocks to direct persons coming from the plant to proceed to the designated assembly area for monitoring and decontamination, as necessary.

3.1.14 Keep the Security Manager and Security Sergeant informed of developing events.

3.1.15. Provide the OSC Manager, Security Manager, and TSC Administrative Manager with periodic briefings on specific security contingency events that may influence the movement of Plant emergency personnel within Protected or Exclusion Areas of the Plant.

3.1.16 Advise the OSC Manager, Security Manager, and the TSC Plant Administrative Manager of evacuation and accountability status.

NOTE: Procedure instructions for the JIC access control officer are contained in JIC Procedures.

3.1.17 Dispatch two security officers to the Joint Information Center (JIC) Support Manager to assist with JIC access control.

3.1.18 Refer incoming media calls to the Joint Information Center.

3.1.19 Upon shift change, brief your relief on responsibilities, duties and current status of security actions being taken.

3.1.20 Upon termination of the emergency:

a. Direct CAS to deactivate the emergency card readers by locking GROUP 10.

b. Prepare individual After Action Report. Refer to PPM 13.13.4.

c. Collect the individual After Action Reports and attachments prepared by staff personnel.

d. Deliver all After Action Reports to the Security Manager or designee.

## 4.0 ATTACHMENTS

None

| ENERGY NORTHWEST | | USE CURRENT REVISION |
|---|---|---|
| COLUMBIA GENERATING STATION<br>PLANT PROCEDURES MANUAL | | |
| PROCEDURE NUMBER<br>*13.11.18 | APPROVED BY<br>DWC - Revision 11 | DATE<br>09/06/00 |
| VOLUME NAME<br>EMERGENCY PLAN IMPLEMENTING PROCEDURES | | |
| SECTION<br>EMERGENCY OPERATIONS FACILITY | | |
| TITLE<br>INFORMATION COORDINATOR DUTIES | | |

TABLE OF CONTENTS


Page

1.0 PURPOSE . . . . . 2

2.0 REFERENCES . . . . . 2

3.0 PROCEDURE . . . . . 2

3.1 General Information Coordinator Responsibilities . . . . . 2
3.2 Control Room Information Coordinator Responsibilities . . . . . 4
3.3 TSC Information Coordinator Responsibilities . . . . . 5
3.4 OSC Information Coordinator Responsibilities . . . . . 5
3.5 EOF Information Coordinator Responsibilities . . . . . 5

4.0 ATTACHMENTS . . . . . 5

## 1.0 PURPOSE

This procedure defines the duties of the Information Network Coordinators and operation of the Information Network System.

## 2.0 REFERENCES

2.1 FSAR, Chapter 13.3, Emergency Plan, Section 6

2.2 PPM 13.13.4, After Action Reporting

2.3 Emergency Response Log (968-23895)

2.4 WNP-2 Plant Status (968-25918)

## 3.0 PROCEDURE

### 3.1 General Information Coordinator Responsibilities

3.1.1 Upon notification of an Alert, Site Area Emergency or General Emergency, report to your designated emergency center.

3.1.2 TSC and OSC Information Coordinators log in on the emergency RWP and obtain an electronic dosimeter.

3.1.3 TSC and OSC Information Coordinators present keycards to the cardreader for accountability.

3.1.4 Enter your name on the Accountability Log to establish manual Personnel Accountability.

3.1.5 Sign in on the center staffing board in the space next to your emergency position.

3.1.6 If you leave the center temporarily, inform the Center Manager of your destination and approximate time of return. Note your destination on the Personnel Accountability Log.

3.1.7 Start the Information Coordinator's computer and overhead projector at the TSC and EOF.

a. Navigate to PDIS and verify that the PC screen image is projected on the pull down screen. Click on the EOP pull down menu and select Plant Status or Rad Status displays as requested.

3.1.8 Activate the Information Network for your center by using either the Jackset and attached headset, or the cordless headset unit.

a. If using attached jackset:

- Plug the headset into the Jackset adapter attached to the Information Coordinator phone.
- Attach the headset control unit to your belt.
- Push the rocker switch on the Jackset so the red bar is showing.

NOTE: If you are using the phone handset rather than the headset push the rocker switch on the Jackset so the red bar does not show.

b. If using the cordless headset, set up the unit as follows:

1) Disconnect the Information Coordinator phone line from the desk phone and connect the line to the cordless phone base unit.

2) Connect the AC adapter to the base unit and plug in to an outlet.

3) Plug the headset with microphone into the handset. Use the PHONE button to turn the phone on, and the MUTE button to mute the phone when not speaking. Push the MUTE button again to speak.

4) If the battery is changed out for a fresh one, place the handset back in the base unit momentarily to synchronize.

Announce your presence on line to the other emergency centers.

NOTE: The Technical Support Center (TSC) Information Coordinator is the Lead Coordinator for the system. Coordinators are also located in the:

- Control Room
- Operations Support Center (OSC)
- Emergency Operations Facility (EOF)
- Joint Information Center (not continuously monitored)

3.1.9 Notify the TSC Information Coordinator of your intention to be off the air for short absences, and check in upon your return.

3.1.10 Record significant incoming information as necessary on the information board in your center provided for that purpose.

3.1.11 Announce significant incoming information to your center manager and staff such as:

- Time other emergency centers were activated.
- Significant information announced from other emergency centers.
- Significant items appearing on your center data displays. If assigned responsibility, record information on center status boards. Use up or down arrows to indicate trends, as appropriate.

3.1.12 Announce significant information to other centers, such as:

- Time your emergency center was activated.
- Items announced to your center staff.
- Items ordered transmitted by the center manager.

3.1.13 Use three way communications for specific center communications and for specific communications within your center.

3.1.14 Refer any calls from the media to the Joint Information Center.

3.1.15 Upon shift change, brief your relief on responsibilities, duties, and status of work being performed.

3.1.16 Upon shift change or termination of the emergency:

3.1.17 Prepare an individual After Action Report. Refer to PPM 13.13.4.

3.1.18 Deliver After Action Reports and logs to your center manager.

3.2 Control Room Information Coordinator Responsibilities

3.2.1 If the TSC Information Coordinator is not on line yet, transmit significant information from the Control Room such as:

- Emergency Classification changes.
- Protective Action Decisions made for Energy Northwest emergency workers, e.g., Protected or Exclusion Area evacuations, KI for emergency workers, etc.
- Plant status information with emphasis on inoperable systems. Refer to WNP-2 Plant Status form (968-25918) information to broadcast if PDIS is not available. Information should be provided block by block.

  NOTE: When activated, allow the Control Room Information Coordinator to report Radiological Status and Met Data if PDIS is not available.

- Time checks according to the Control Room digital time display.

3.3 TSC Information Coordinator Responsibilities

3.3.1 Transmit significant information from the TSC such as:

- Plant status information with emphasis on inoperable systems. Refer to WNP-2 Plant Status form for examples of information to broadcast.

- Significant equipment out of service (OOS) or returned to service that is not listed on the WNP-2 Plant Status form or the Plant Status board.

  NOTE: When activated, allow the EOF Information Coordinator to report offsite Radiological Status and Met Data.

- Significant system repair results.

- Protective Action Decisions for Energy Northwest emergency workers, e.g., Protected Area evacuations, KI for emergency workers.

3.4 OSC Information Coordinator Responsibilities

3.4.1 Transmit significant information from the OSC such as:

- Significant Repair Team activities and findings.

- Inquiries to establish personnel accountability.

3.5 EOF Information Coordinator Responsibilities

3.5.1 Transmit significant information from the EOF such as:

- Significant on-site and off-site coordination activities with outside agencies.

- If requested, provide Field Team readings.

- Significant technical analyses results reported by the Engineering staff.

- Dose projection results

- Notify all stations immediately when an offsite release has occurred.

4.0 ATTACHMENTS

None

| ENERGY NORTHWEST | | USE CURRENT REVISION |
|---|---|---|
| COLUMBIA GENERATING STATION<br>PLANT PROCEDURES MANUAL | | |
| PROCEDURE NUMBER<br>*13.13.3 | APPROVED BY<br>DWC - Revision 12 | DATE<br>09/06/00 |
| VOLUME NAME<br>EMERGENCY PLAN IMPLEMENTING PROCEDURES | | |
| SECTION<br>REENTRY/RECOVERY | | |
| TITLE<br>INTERMEDIATE PHASE MUDAC OPERATIONS | | |

TABLE OF CONTENTS


Page

1.0 PURPOSE . . . . . 3

2.0 REFERENCES . . . . . 3

3.0 DISCUSSION . . . . . 4

4.0 DEFINITIONS . . . . . 5

4.1 Relocation Area . . . . . 5
4.2 Food Control Area . . . . . 5
4.3 Food Control Isopleth . . . . . 5
4.4 20 microR/hr Isopleth . . . . . 5
4.5 Relocation Isopleth . . . . . 5
4.6 Relocation Boundary . . . . . 5
4.7 Food Control Boundary . . . . . 5
4.8 Protective Action Decision Group (PADG) . . . . . 5
4.9 Radioactive Hot Spot(s) . . . . . 5

5.0 PREREQUISITES . . . . . 6

6.0 PRECAUTIONS AND LIMITATIONS . . . . . 6

# TABLE OF CONTENTS


Page

7.0 PROCEDURE . . . . . 6

7.1 Transfer of MUDAC Leadership . . . . . 6
7.2 Initial Return Protective Action Recommendations (PARs) for Radiologically Unaffected Areas . . . . . 8
7.3 Isopleth Survey Plan Development . . . . . 9
7.4 Isopleth Survey Plan Implementation . . . . . 9
7.5 Constructing the Relocation Area Isopleth . . . . . 10
7.6 Revised Return PAR . . . . . 11
7.7 Relocation Area PAR . . . . . 11
7.8 Constructing the Food Control Isopleth . . . . . 12
7.9 Food Control Area PAR . . . . . 14
7.10 Re-opening Transportation Corridor Recommendation . . . . . 14
7.11 Initial/Generic Sampling Plan . . . . . 16
7.12 Detailed Sampling Plan . . . . . 17
7.13 Detailed Sampling Plan Implementation . . . . . 19
7.14 Laboratory Analysis Data . . . . . 20

8.0 ATTACHMENTS . . . . . 22

8.1 Initial Return Protective Action Recommendation . . . . . 23
8.2 Isopleth Survey Plan . . . . . 24
8.3 Revised Return Protective Action Recommendation . . . . . 25
8.4 Relocation Area Protective Action Recommendation . . . . . 26
8.5 Determining the Value of d (3) . . . . . 27
8.6 Isopleth Survey Log . . . . . 38
8.7 Food Control Area Protective Action Recommendation . . . . . 39
8.8 Reopening of the Transportation Corridor Recommendation . . . . . 40
8.9 Interim Sampling Plan . . . . . 41
8.10 Detailed Sampling Plan . . . . . 42
8.11 Sample and Data Analysis Summary . . . . . 43
8.12 Update Briefing Guide . . . . . 44
8.13 Hot Spot Management and Control . . . . . 45

## 1.0 PURPOSE

This procedure describes MUDAC operations for the intermediate phase of emergency response. This procedure provides direction for evaluating post accident radiological conditions and for developing recommendations that lead to protection of the public from chronic radiation exposure and return of population to unaffected areas.

## 2.0 REFERENCES

2.1 FSAR, Chapter 13.3, WNP-2 Emergency Plan

2.2 Washington State Fixed Nuclear Facility Emergency Response Plan

2.3 Washington State Department of Health Response Procedures for Radiation Emergencies

2.4 Oregon WNP-2 Emergency Response Plan

2.5 Oregon State Health Division Response Procedures for Radiation Emergencies

2.6 PPM 13.8.1, Emergency Dose Projection System Operations

2.7 PPM 13.9.1, Environmental Field Monitoring Operations

2.8 PPM 13.9.5, Environmental Sample Collection

2.9 PPM 13.2.1, Emergency Exposure Levels/Protective Action Guides

2.10 PPM 13.2.2, Determining Protective Action Recommendations

2.11 EPA 400-R-92-001, Manual of Protective Action Guides and Protective Guides and Protective Actions for Nuclear Incidents, October 1991.

2.12 Cooper, J., Goevelinger, N., "A Methodology to Allow the Rapid Development of Post-Plume Protective Action Recommendations for the Ingestion Pathway", Lessons Learned from the 1991 Trojan Nuclear Plant Post-Emergency Exercise, 2nd Edition, April 1993; Oregon Department of Energy, Oregon State Health Division, Columbia County Oregon Emergency Services.

2.13 Intermediate Phase Duties Checklist, Part 1, Transfer of Leadership, 968-25975

2.14 Intermediate Phase Duties Checklist, Part 2, Dose Assessment Coordinator, 968-25978

2.15 Intermediate Phase Duties Checklist, Part 3, Dose Assessor, 968-25980

2.16 Intermediate Phase Duties Checklist, Part 4, Field Team Coordinator, 968-25981

## 3.0 DISCUSSION

During the intermediate phase, offsite activities focus on relocation and return, and ingestion (food control) concerns. The Washington State staff in the EOF should at this time assume leadership from Energy Northwest for MUDAC and EOF offsite operations in the following roles; a Washington State Health Liaison, a Washington State Dose Assessment Coordinator, a Washington State Field Team Coordinator, a Washington State Dose Assessor, and a Protective Actions Decision Group (PADG) Chariperson. The PADG Chairperson may by the Dose Assessment Coordinator or an indivdiual identified by the PADG. If the State of Oregon is affected, then a representative(s) from the State of Oregon may respond to the EOF and assist in this process for the State of Oregon.

The first objective of field monitoring is to determine contaminated areas and those areas not affected by plume deposition. Existing field data may provide verification of unaffected upwind areas. Allowing displaced people to return to their homes is a high priority. As soon as field data verifies the unaffected, evacuated, or sheltered areas, the MUDAC may issue an initial Return PAR.

An Isopleth Survey Plan provides the blueprint to obtain data to characterize "clean" or unaffected areas, the Relocation Area and the Food Control Area. The amount of time required to complete the field team monitoring depends on extent of the land area affected, the number of available field teams and the levels of contamination. When the data acquisition from the Isopleth Survey Plan is complete and has been plotted on a map, several actions occur concurrently in the MUDAC; a Relocation isopleth is drawn (if applicable), a Revised Return PAR may be developed, approved and issued, and the food control isopleth is calculated and/or projected. The Interim sampling plan is drawn up and initiated while the Food Control PAR is developed, approved and issued, and the recommendation is made to reopen affected transportation corridors.

After the Relocation Boundary and Food Control Boundary are decided by the county and received in the MUDAC, the Sampling Plan is developed to verify the food control boundary and identify via laboratory analyses, quantitative levels of radionuclides, if any, in milk, pasture, agricultural crops and products, water and/or soil. The laboratory analyses provide the technical basis for agricultural embargoes, total population dose assessment and reduction of the food control boundary. The Sampling Plan is a living document which may be revised and added to obtain the level of comprehensive coverage desired.

## 4.0 DEFINITIONS

4.1 Relocation Area is a geographical area where ground deposition levels would expose a resident to greater than 2 rem TEDE during the first year following the accident; greater than 0.5 rem TEDE during the second year; or more than 5 rem TEDE over 50 years. (This is synonymous with the Environmental Protection Agencies "Restricted Zone" as defined in EPA-400-R-92-001.) Access to the Relocation Area is controlled. Residents not previously evacuated from these areas are relocated if their calculated dose will exceed these guidelines.

- Relocation Area = Relocation Isopleth + buffer

4.2 Food Control Area: A geographical area in which food control measures may be implemented. Measures are enacted due to potential or actual contamination of food products above State intervention levels. The food control area includes the relocation area, if a relocation decision is appropriate.

- Food Control Area = Food Control Isopleth + buffer

4.3 Food Control Isopleth: The calculated and/or projected isopleth used to determine the food control area.

4.4 20 microR/hr Isopleth: A measurable reference isopleth used to calculate the Food Control Isopleth.

4.5 Relocation Isopleth: The measured isodose line used to determine the relocation area.

4.6 Relocation Boundary: A geo-political designation which defines and surrounds the Relocation area and includes a buffer area. Residents will be relocated from this area to avoid chronic radiation exposure.

4.7 Food Control Boundary: A geo-political designation which defines and surrounds the Food Control area, where food control measures may be implemented.

4.8 Protective Action Decision Group (PADG): Technical group of Dose Assessment experts assigned by Washington State, DOE-RL and when applicable, State of Oregon. The PADG Chairperson is the designated Dose Assessment Coordinator.

4.9 Radioactive Hot Spot(s): Radioactively contaminated area(s) outside of the already established Relocation of Food Control Areas.

## 5.0 PREREQUISITES

MUDAC operations officially enter the intermediate phase when the plant has stabilized to the point that no further release that could approach accepted plume exposure Protective Action Guides (PAGs) is expected and plant conditions will have no further impact on offsite protective action decisions.

## 6.0 PRECAUTIONS AND LIMITATIONS

None

## 7.0 PROCEDURE

NOTE: The Checklist for Intermediate Phase MUDAC Activities may be used as deemed necessary to track the actions that have been accomplished. It is a controlled form.

### 7.1 Transfer of MUDAC Leadership

7.1.1 The transfer of MUDAC Leadership occurs after the radiological conditions move from the plume to the ingestion pathway (intermediate phase) and the Emergency Operations Facility (EOF) Manager verifies the following conditions:

a. Plant conditions stabilize, and 1) no further release threat exists that could exceed the plume exposure PAGs, and 2) Plant conditions will no longer have an effect on offsite protective action decision making.

b. The plume has dispersed and it no longer poses a threat that could approach the plume exposure PAGs.

7.1.2 Energy Northwest formally transfers lead offsite responsibility to the State of Washington when:

a. The Radiological Emergency Manager (REM) has provided documentation and status for all previously issued Protective Actions Recommendations (PARS) to the Washington State Dose Assessment Coordinator, and

b. The REM briefs and turns over leadership responsibility to the Washington State Dose Assessment Coordinator for all MUDAC activities, and

c. The REM assures continued Energy Northwest technical, administrative, and field monitoring support for ingestion pathway actions, and

d. The REM and the EOF Manager brief and turn over leadership responsibility to the State Health Liaison for all offsite activities.

7.1.3 Energy Northwest assumes a support role with continued availability of qualified MUDAC staff. The REM is the EOF Manager's representative for offsite radiological matters and for coordination with onsite activities. If the ingestion pathway threat involves the State of Oregon, a representative from Oregon may join the Protective Action Decision Group in MUDAC and participate in development of protective action recommendations.

7.1.4 The State Health Liaison and EOF Manager brief the EOF staff on the transfer of leadership.

7.1.5 The State Health Liaison or EOF Manager notifies the State and affected County Emergency Operations Centers (EOCs) when the transfer of leadership occurs.

7.1.6 The State Health Liaison coordinates requesting the following resources:

a. Washington State Agriculture Representative be dispatched to MUDAC, if not already present.

b. FRMAC (Federal Radiological Monitoring and Assessment Center) assets, in accordance with DOH procedures, if not previously requested.

7.1.7 The Field Team Coordinator contacts the WA State Lab Liaison at the Public Health Lab (206-361-2891) to verify contact with all sample laboratories to:

a. Confirm contact phone and fax numbers.

b. Provide alternate lab locations or addresses.

c. Review the expected distribution of sample analysis data.

7.1.8 The Field Team Coordinator or designee coordinates sample transfer operations from the field and transfer locations to laboratories. Consider logistics for all parties involved as well as radiological and weather conditions.

7.2 Initial Return Protective Action Recommendations (PARs) for Radiologically Unaffected Areas

7.2.1 The PADG evaluates the feasibility of recommending the release of clearly unaffected areas previously evacuated or sheltered.

Consider the following:

a. Other available meteorological data: US DOE Hanford site; Richland Airport; Pasco Airport, etc.

b. Available upwind field team monitoring data.

c. Initial return should be considered only if sufficient data is available to verify unaffected areas. The Initial Return PAR should be initiated only when sufficient data supports the recommendations.

d. Discontinue sheltering unless resuspension could occur because of meteorological conditions.

e. Open air space and Columbia River corridors using the Reopening of the Transportation Corridor Recommendation, Attachment 8.8.

f. Status of roads in areas marked for the initial return and roads that may be used for access to return areas.

7.2.2 The PADG completes and concurs with the Initial Return PAR, Attachment 8.1.

7.2.3 The Dose Assessment Coordinator approves the Initial Return PAR.

7.2.4 The Dose Assessment Coordinator briefs the State Health Liaison the REM, and the affected state and county representatives.

7.2.5 The Dose Assessment Coordinator or State Health Liaison will conduct periodic briefings of the facility staff, including PAR disposition, utilizing guidance contained in Update Briefing Guide, Attachment 8.12.

7.2.6 The State Health Liaison ensures transmission of the Initial Return PAR to the State/County Emergency Centers and the Joint Information Center, and verifies receipt of the PAR package.

7.2.7 If incorrect information is issued, a written correction shall be distributed to all of the original recipients, and receipt of the correction verified.

7.3 Isopleth Survey Plan Development

7.3.1 The PADG assisted by the Field Team Coordinator, develops the "Isopleth Survey Plan" ( Attachment 8.2). The plan designates the geographical areas where field teams will monitor to identify the 500 microR/hr and 20 microR/hr isopleths. Refer to Attachment 8.13 for hot spot management.

Consider the following:

a. Obtain a dose projection map depicting the 20 $\mu$R and 500 $\mu$R line TEDE value per PPM 13.8.1, Attachment 5.1.

b. Projected and actual field team monitoring data of plume travel paths.

c. The number of available field teams and their present locations and mission.

d. Minimize the number of teams assigned to monitor known contaminated areas.

e. Laboratory analysis of plume samples.

7.3.2 The Dose Assessment Coordinator reviews and approves the Isopleth Survey Plan.

7.3.3 The Dose Assessment Coordinator provides the Isopleth Survey Plan to the Field Team Coordinator for implementation.

7.3.4 The Dose Assessment Coordinator briefs the State Health Liaison and the REM.

7.4 Isopleth Survey Plan Implementation

7.4.1 The Field Team Coordinator assigns and directs the field teams to specified areas to identify gross 500 microR/hr and gross 20 microR/hr isopleths. The readings should be based on waist high, closed window readings. The Field Team Coordinator needs to consider the following points when making assignments:

a. Keep the number of teams assigned to determine the relocation area to a reasonable minimum because of contamination.

b. The Field Team(s) assigned to locate the 500 microR/hr isopleth should not be the same Team(s) assigned to locate the 20 microR/hr

isopleth. If resources permit, teams should be instructed to approach the assigned isopleth until the 500 microR/hr or 20 microR/hr reading is registered, then retreat to lower contamination levels to begin the next survey track.

NOTE: Transmit and receive field team and sampling locations using latitude and longitude readings. Use map grid coordinates when Global Positioning System (GPS) is not available. Supplement location descriptions with geo-political landmarks to clarify locations.

c. The Field Teams and Field Team Dispatcher will use the Isopleth Survey Log, Attachment 8.6, to document field team data.

7.4.2 The Field Team Coordinator ensures that field team data is plotted properly on the map(s) and verifies any questionable information. Ensure that background readings are noted when plotting data.

7.4.3 The Field Team Coordinator will update the PADG on field data and information from evacuated areas not yet released for return.

7.5 Constructing the Relocation Area Isopleth

7.5.1 The Field Team Coordinator ensures incoming isopleth field data points are plotted and labeled on the appropriate map. The Field Team Coordinator may request additional monitoring in areas of uncertainty or where data is lacking.

7.5.2 Once sufficient points are plotted, the Dose Assessor or designee draws the isopleth(s) connecting the relocation area (500 microR/hr) data points. Consider the guidelines contained in Attachment 8.13 for hot spot management.

a. The Dose Assessor adds an appropriate buffer zone considering wind, stability class, quantity of field team data available, etc., to form the Relocation Area.

b. The Dose Assessor or designee prepares a map of the Relocation Area for transmission with the Relocation Area PAR paperwork and the associated Revised Return PAR.

7.6 Revised Return PAR

7.6.1 The Dose Assessment Coordinator initiates the Revised Return PAR, Attachment 8.3, based on Relocation Area determination. It is recommended that this PAR be sent with the Relocation PAR paperwork, when the return recommendation is based upon the Relocation PAR map. Refer to Attachment 8.13 for hot spot management guidelines.

7.6.2 The PADG determines those geographic areas that were previously evacuated which exhibit a verified dose of less than 2 rem for the first year.

7.6.3 The PADG completes a Revised Return PAR, Attachment 8.3, and provides a written description of the area(s) released for return in terms of geographic landmarks. If applicable, check "map attached" box. (This means a map is not always required).

7.6.4 The Dose Assessment Coordinator reviews and approves the Revised Return PAR.

7.6.5 The Dose Assessment Coordinator briefs the State Health Liaison the REM, and the affected state and county representatives.

7.6.6 The State Health Liaison ensures the transmission of the Revised Return PAR package to the State/County Emergency Centers and the Joint Information Center and verifies receipt of the PAR package.

7.6.7 If incorrect information is issued, a written correction shall be distributed to all of the original recipients, and receipt of the correction verified.

7.7 Relocation Area PAR

7.7.1 The PADG prepares a Relocation Area PAR, Attachment 8.4, based on the measured data points, the plotted relocation isopleth and the added buffer zone.

Consider the following:

a. The gamma exposure rate will decrease rapidly if deposited material includes a significant fraction of short-lived radionuclides.

b. Until additional radiological data is available, the relocation isopleth plus buffer zone represents a conservative relocation area and serves

as the basis for affected County EOC to determine and the State EOC to endorse the Relocation Boundary.

c. It is essential to complete this task in a timely manner.

d. A relocation area prohibits immediate residency, but may allow local industry and possibly interstate commerce

7.7.2 The Dose Assessment Coordinator reviews and approves the Relocation PAR package, Attachment 8.4, and attaches the relocation map as prepared in Section 7.5.

7.7.3 The Dose Assessment Coordinator briefs the State Health Liaison the REM, and the affected state and county representatives.

7.7.4 The State Health Liaison ensures transmission of the Relocation PAR to the State/County Emergency Centers, the Laboratory Liaison at the Public Health Laboratory, the Joint Information Center, and the FRMAC (if activated), with receipt verification.

7.7.5 If incorrect information is issued, a written correction shall be distributed to all of the original recipients, and receipt of the correction verified.

7.8 Constructing the Food Control Isopleth

7.8.1 The Dose Assessor constructs the Food Control Isopleth as follows:

a. Draw an isopleth connecting the 20 microR/hr data points when sufficient points are plotted on the ingestion map. Consider the hot spot management guidance in Attachment 8.13 when performing this step.

b. Construct a minimum of three curvilinear radial lines originating from the accident release site (more frequently for complex patterns), and extend the lines through the 20 microR/hr isopleth.

c. Determine $d_1$ as the distance from the source (point of release) to the intersect of the Relocation Isopleth (500 microR/hr) and $d_2$ as the distance from the source to the intersect of the 20 microR/hr isopleth. Determine the value of $d_3$ using the values contained in Attachment 8.5. Skip to step 7.8.1.f.

d. Alternately, determine the value of "x" using equation 1 (see equations for calculating the Food Control area) and proceed to Step 7.8.1.e.

e. Using Equation 2, calculate the location of the Food Control isopleth points. Use this calculated point as the center line point. Then using the <u>same</u> value of "x," calculate the location for each of the remaining radial lines using their respective $d_1$, $d_2$ distances.

f. Plot and draw the food control area isodose rate line.

g. For areas within the State of Washington, add an appropriate buffer area considering EDPS and the quantity of field team data available, etc. For areas within the State of Oregon, do not specify any additional buffer areas.

h. The Dose Assessor prepares a map of the Food Control Area (Isopleth plus buffer zone).

ALTERNATE METHOD

Equations for Calculating the Food Control Area

Equation 1: $$x = \frac{\ln (D_2/D_1)}{\ln (d_1/d_2)}$$

Equation 2: $$d_3 = d_2 \left[\frac{D_3}{D_2}\right]^{-\frac{1}{x}}$$

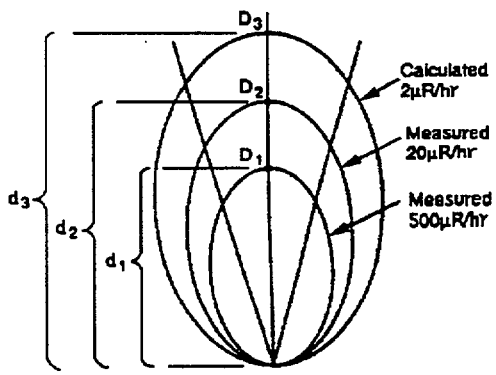


Where:
$D_1$ = Dose rate (500 microR/hr)
$d_1$ = Distance from source to $D_1$
$D_2$ = Dose rate (20 microR/hr)
$d_2$ = Distance from source to $D_2$
$D_3$ = Dose rate (2 microR/hr)
$d_3$ = Distance from source to $D_3$
x = Constant related to atmospheric conditions

7.9 Food Control Area PAR

7.9.1 The Dose Assessment Coordinator initiates the preparation of a Food Control Area PAR based on the recommended food control isopleth developed by the Dose Assessor.

7.9.2 The PADG prepares Food Control Area PAR paperwork using Attachment 8.7 and attaches the Food Control Isopleth map developed in Section 7.8.1.

7.9.3 The Dose Assessment Coordinator reviews and approves the PAR package.

7.9.4 The Dose Assessment Coordinator briefs the State Health Liaison the REM, and the affected state and county representatives.

7.9.5 The State Health Liaison ensures transmission of the Food Control Area PAR paperwork to the State/County Emergency Centers, the Laboratory Liaison at the Public Health Laboratory, the Joint Information Center, and the FRMAC (if activated), with receipt verification.

7.9.6 The State Health Liaison informs the EOF of PAR disposition.

7.9.7 If incorrect information is issued, a written correction shall be distributed to all of the original recipients, and receipt of the correction verified.

7.10 Re-opening Transportation Corridor Recommendation

7.10.1 The PADG determines what transportation corridors are located entirely or partially within the recommended relocation area.

7.10.2 The PADG evaluates available radiological data from along the corridors.

7.10.3 The Field Team Coordinator obtains additional radiological data from the field teams, if necessary to adequately assess the situation.

7.10.4 The PADG assesses the situation and recommends action(s) to facilitate transportation corridor use, e.g., additional field sampling if more data is needed, restricting only portions of the corridor to traffic flow, etc.

7.10.5 The PADG completes a Reopening Transportation Corridor Recommendation (Attachment 8.8) and considers the following:

a. Release all transportation corridors in unaffected areas.

b. Reopen the airspace (if closed) and river to unrestricted use once the plume has dissipated. Contact the REM for this information, if needed.

c. Other than the river and airspace, do not reopen any transportation corridor for restricted or unconditional use until the Dose Assessment Coordinator has issued the Relocation PAR.

d. Be aware that the Relocation Boundary set by the county may include transportation corridors not previously identified in the Relocation Area determined by MUDAC.

e. Reopen a transportation corridor to unrestricted use only when the recommended relocation area does not encompass any part of the transportation corridor.

f. Boats docked or moored within the recommended relocation area should be surveyed prior to leaving. If contamination is found, the field team member conducting the survey should contact the Field Team Coordinator for further instructions.

7.10.6 The Dose Assessment Coordinator reviews and approves the reopening of the Transportation Corridor Recommendation, Attachment 8.8.

7.10.7 The Dose Assessment Coordinator briefs the State Health Liaison the REM, and the affected state and county representatives.

7.10.8 The State Health Liaison ensures transmission of the Transportation Corridor PAR to the State/County Emergency Centers and the Joint Information Center, and verifies receipt of the PAR package.

7.10.9 If incorrect information is issued, a written correction shall be distributed to all of the original recipients, and receipt of the correction verified.

7.11 Interim Sampling Plan

The Field Team Coordinator determines and assigns the Interim Sampling Plan, Attachment 8.9, when the Monitoring Plan is complete and the Relocation and Food control PARs have been issued, but not yet decided upon. This is an opportunity to obtain additional data to get an overall "thumb-nail sketch" of the affected area, isolated "hot spots", areas of concern, areas upwind, or areas where data has yet to be collected. The Interim Sampling Plan does not require a PAR. Obtain input from the Washington State Department of Agriculture and/or County Agriculture Representatives.

The Interim Sampling plan is a broad based, generalized information sweep. This plan relies on the field teams to carry out any of the following requests from MUDAC:

- General Area dose rates
- General deposition readings
- Hot spots and other areas of concern
- Deposition in soil
- Deposition on pasture grass
- Clean Area Survey (Negative data)
- Collection and replacement of environmental thermoluminescent dosimeters (TLDs)
- Collection of air samples in areas where re-suspension is suspected
- Surveys/smears of contaminated road and rail surfaces, and vehicle filters
- Collection of samples, e.g. "Hot" samples, etc.
- Other duties as requested

7.11.1 The Field Team Coordinator directs a field team to obtain a soil and/or vegetation sample from a highly contaminated location for source term evaluation.

7.11.2 The Field Team Coordinator arranges distributions to appropriate laboratories with the Laboratory Liaison.

7.11.3 The Field Team Coordinator or designee coordinates sample transfer operations from the field and transfer locations to laboratories.

a. Sample transfer locations may vary due to radiological conditions and sampling locations. (Consider Emergency Worker Assistance Centers (EWACs) and other easily accessible locations.)

b. Ensure the area reads background and that no contamination is present.

7.11.4 The Field Team Coordinator assigns the field teams to geographical areas to obtain general dose rate and deposition readings, and to take soil, vegetation and air samples as appropriate.

7.11.5 The Field Team Coordinator instructs the teams to report their data every hour, or as appropriate.

7.12 Detailed Sampling Plan

7.12.1 The second phase of the sampling plan is more formal and is developed after the relocation and food control boundaries are approved. The PADG with the assistance of the Washington State Department of Agriculture and the Field Team Coordinator develop the Detailed Sampling Plan, Attachment 8.10.

a. The Washington State Department of Agriculture agents and/or the County Extension Agents provide information on crops in harvest and farm locations inside and outside the Food Control Boundary.

b. The DOH Drinking Water staff provides locations of any potentially affected open drinking water supplies to the PADG.

c. The Field Team Coordinator will assign sampling points nearest to the Food Control boundary, working in toward the center and outward from the boundary to verify clean areas and appropriate boundary placement.

d. The Field Team Coordinator notifies the Laboratory Liaison of the estimated time of arrival and the number of samples for analysis.

e. The Field Team Coordinator or WA dose assessment staff is the point of contact for all in-coming laboratory analyses.

7.12.2 The PADG with the assistance of the Washington State Department of Agriculture and the Field Team Coordinator establish the sample collection priorities and locations.

Considering the following:

a. Begin sampling of pasture grass, foodstuffs and open sources of drinking water supplies as soon as possible following the plume.

b. Begin routine milk monitoring 12 to 18 hours after plume passage.

c. Sample and monitor the most perishable crops first.

d. Sample harvested food ready for market before other foodstuffs and crops requiring harvest within 30 days.

e. Sampling of above ground crops should have priority over root crops.

7.12.3 The Field Team Coordinator and PADG should select broad based, general monitoring and/or sampling locations.

7.12.4 The Field Team Coordinator or designee records the coordinates of these sampling locations for the Detailed Sampling Plan, Attachment 8.10.

7.12.5 The PADG reviews and assembles the pages of the Detailed Sampling Plan for completeness and presents it to the Dose Assessment Coordinator.

7.12.6 The Dose Assessment Coordinator reviews the Detailed Sampling Plan with the PADG to ensure it adequately addresses all credible short-term potential direct exposure and ingestion pathways.

7.12.7 The Dose Assessment Coordinator approves and signs the Detailed Sampling Plan.

7.12.8 The Dose Assessment Coordinator provides the approved Detailed Sampling Plan to the Field Team Coordinator for implementation in accordance with Step 7.13.

7.12.9 The Dose Assessment Coordinator briefs the State Health Liaison the REM, and the affected state and county representatives.

7.12.10 The State Health Liaison should ensure that a copy of the Detailed Sampling Plan is transmitted to the Health Physicist (HP) at the State EOC, the DOH

Laboratory Liaison, the FRMAC Liaison (if applicable), and the County EOCs with receipt verification.

7.12.11 The PADG, with Department of Agriculture assistance, updates the sampling plan as needed:

a. Incorporates appropriate feedback received from the HP at the State EOC; the DOH Laboratory Liaison; the Dose Analyst at the Oregon EOC; the FRMAC Liaison (if applicable); and County EOCs, into the Detailed Sampling Plan.

b. Provides updates and revisions as approved to the Field Team Coordinator for immediate implementation.

c. Periodically updates the plan to accommodate unexpected data results, meteorological conditions.

d. Provides copies of periodic revisions to the DOH Laboratory Liaison; the HP at the State EOC; the Dose Analyst at the Oregon EOC; the FRMAC Liaison (if applicable); and county EOCs. Incorporate appropriate feedback from these agencies into revisions of the Detailed Sampling Plan.

7.13 Detailed Sampling Plan Implementation

7.13.1 To implement the "Sampling Plan" the Field Team Coordinator performs the following:

a. Assigns and dispatches field teams to selected monitoring and/or sampling locations. Instruct field teams to collect specified samples from assigned locations and call in their information.

b. Confirms the arrangements made for transporting samples from transfer locations to laboratories using one or more of the following:

- Washington State Patrol
- Local Sheriff's office
- National Guard
- FRMAC
- others, as available

c. Reviews personnel and equipment resources available for monitoring, sampling, and analysis. Advise the Dose Assessment Coordinator of any needs.

7.13.2 The Field Team Dispatcher or designee logs the field team data on a Sample Data and Analysis Summary (Attachment 8.11) as follows; the sample tag number, the field team designation, the location in grid coordinates plus any other designation. Also check the sample type, recording only one type of sample per line. Record the time that the sample was taken, the area dose rate and the deposition reading.

7.13.3 The Field Team Coordinator plots the sample location using sequentially numbered color discs and marks the correlating disc number on the Sample Data and Analysis Summary (Attachment 8.11) in the first column on the same line with the sample information.

7.13.4 The Field Team Coordinator and PADG identify locations for boundary adjustments based on dose rates or where additional sampling is necessary.

7.13.5 The PADG initiates revised PARs when appropriate. (See Relocation, Return and Food Control PARs.)

7.13.6 The Field Team Coordinator briefs the PADG on the results of the field team dose rate and deposition data.

7.13.7 If incorrect information is issued, a written correction shall be distributed to all of the original recipients, and receipt of the correction verified.

7.14 Laboratory Analysis Data

Decisions on Relocation Areas and Food Control Areas are initially determined using field team readings. Once sufficient lab results (from samples of milk, food, soil and vegetation) are available, MUDAC must reevaluate these areas with the intent to reduce the affected areas.

For Food Control, lab results will focus on the four isotopes of I-131, Cs-134, Cs-137 and Sr-90. While concentrations of other isotopes will be calculated by the labs, and may even be reported to MUDAC, Dose Assessors should limit their analysis to these four primary isotopes.

Ratios for these four isotopes should be determined by dividing the lab result by the corresponding Derived Intervention Level. If any one of the four ratios for a specific sample is $>1$, interdiction of all food in that area should continue. The ratios of Washington State DILs are not summed.

Lab results may include other radionuclides. These values may be entered into a computer spreadsheet for analysis as described below in 7.14.7.

7.14.1 Distribution of lab sample analyses data is as follows: (2 or more copies)

a. Original to the WA State Dose Assessor

b. Copy to WA State Dose Assessment Coordinator

c. Copy to the WA State Field Team Coordinator

d. Other copies as needed or requested

e. If time allows, the MUDAC staff should consolidate lab sample analysis data and the field team sample data on the Sample Data and Analysis Summary Form, Attachment 8.11.

7.14.2 The Dose Assessor reviews laboratory analyses of samples and identifies samples with activities above the affected state's Derived Intervention Levels found in the Department of Health Procedures for that state.

7.14.3 The Dose Assessor reviews the laboratory analyses, performs the technical assessment of the data and calculates the DIL ratios.

7.14.4 The Field Team Coordinator posts the Limiting DIL Ratio for each sample on an ingestion EPZ map. Use different colored symbols to identify less than 1.0 and greater than or equal to 1.0, e.g., less than 1.0 = green dot and greater than or equal to 1.0 = red dot. Identify dot with map disk number.

7.14.5 The State Health Liaison verifies that the data is received by radiological counterparts at the State Emergency Centers.

7.14.6 The PADG performs "groundshine" calculations using a soil isotopic analysis computer program. Review enough sample calculations to determine a representative mix of radionuclides.

Use the soil sample analyses from the laboratory to calculate gamma exposures. These exposures are compared to the first year relocation PAG, or the second year and fifty year remediation guidelines. If calculated exposures are less than the corresponding PAGs, consider reducing the Relocation Area.

7.14.7 Groundshine calculation results will be entered on the Sample Data and Analysis Summary form, Attachment 8.11, as time permits. If any exposures are greater than or equal to the first year PAGs, consider the need for relocation of residents, pets, or livestock. If any exposures are greater than or equal to the second year or 50 year PAGs, consider mitigation actions such as relocation, embargo of crops or foodstuffs, or other alternatives as needed.

7.14.8 The Field Team Coordinator and PADG identify locations for boundary adjustments based on dose rates and/or sample results, or where additional sampling is necessary.

7.14.9 The PADG prepares PARs to refine, i.e., relax or rescind, existing relocation and/or ingestion PADs as necessary, based on sampling results.

7.14.10 If incorrect information is issued, a written correction shall be distributed to all of the original recipients, and receipt of the correction verified.

## 8.0 ATTACHMENTS

8.1 Initial Return Protective Action Recommendation
8.2 Isopleth Survey Plan
8.3 Revised Return Protective Action Recommendation
8.4 Relocation Area Protective Action Recommendation
8.5 Determining the Value of d (3)
8.6 Isopleth Survey Log
8.7 Food Control Area Protective Action Recommendation
8.8 Reopening of the Transportation Corridor Recommendation
8.9 Interim Sampling Plan
8.10 Detailed Sampling Plan
8.11 Sample and Data Analysis Summary
8.12 Update Briefing Guide
8.13 Hot Spot Management And Control

## INITIAL RETURN
## PROTECTIVE ACTION RECOMMENDATION

Date _____

The following areas have been evacuated/sheltered. Time

| Section 1 | | Section 2 | | Section 3 | | Section 4 | |
|---|---|---|---|---|---|---|---|
| evacuated | sheltered | evacuated | sheltered | evacuated | sheltered | evacuated | sheltered |
| ☐ 0 - 2 miles<br>☐ 2 - 10 miles | ☐ 0 - 2 miles<br>☐ 2 - 10 miles | ☐ 0 - 2 miles<br>☐ 2 - 10 miles<br>☐ Schools | ☐ 0 - 2 miles<br>☐ 2 - 10 miles<br>☐ Schools | ☐ 0 - 2 miles<br>☐ 2 - 10 miles | ☐ 0 - 2 miles<br>☐ 2 - 10 miles | ☐ 0 - 2 miles<br>☐ 2 - 10 miles | ☐ 0 - 2 miles<br>☐ 2 - 10 miles |

☐ No change at this time

The Protective Action Decision Group Recommends the Following Actions:

| ☐SECTION 1 | RETURN | DISCONTINUE SHELTERING |
|---|---|---|
| 0 - 2 MILES | ☐ | ☐ |
| 2 - 10 MILES | ☐ | ☐ |
| Ringold Fishing Area | ☐ | ☐ |
| Wahluke Hunting Area | ☐ | ☐ |

| ☐SECTION 2 | RETURN | DISCONTINUE SHELTERING |
|---|---|---|
| 0 - 2 MILES | ☐ | ☐ |
| 2 - 10 MILES | ☐ | ☐ |
| Schools | ☐ | ☐ |

| ☐SECTION 3 | RETURN | DISCONTINUE SHELTERING |
|---|---|---|
| 0 - 2 MILES | ☐ | ☐ |
| 2 - 10 MILES | ☐ | ☐ |
| Horn Rapids Recreational Area and ORV Park | ☐ | ☐ |

| ☐SECTION 4 | RETURN | DISCONTINUE SHELTERING |
|---|---|---|
| 0 - 2 MILES | ☐ | ☐ |
| 2 - 10 MILES | ☐ | ☐ |

☐ Map attached

Approved by: (signature)
PADG Chairperson/Dose Assessment Coordinator _____
_____

Concurred by: (signature)
WA State Health Liaison _____

Attachment 8.1

# ISOPLETH SURVEY PLAN

Date: Time: Page of

| Field Team | GENERAL LOCATION: Grid/landmarks /Latitude & Longitude | Instructions |
|---|---|---|
| | | |
| | | |
| | | |
| | | |
| | | |
| | | |
| | | |

Monplan.2

APPROVED:_____ _____ DISPATCHED:_____

PADG Chairperson/Dose Assessment Coordinator Date/Time FIELD TEAM COORDINATOR _____/_____ Date / Time

Attachment 8.2

# REVISED RETURN
# PROTECTIVE ACTION RECOMMENDATION

Date: _____

The following areas are still evacuated: Time:

| Section 1 | Section 2 | Section 3 | Section 4 |
|---|---|---|---|
| ☐ 0 - 2 miles<br>☐ 2 - 10 miles | ☐ 0 - 2 miles<br>☐ 2 - 10 miles<br>☐ Schools | ☐ 0 - 2 miles<br>☐ 2 - 10 miles | ☐ 0 - 2 miles<br>☐ 2 - 10 miles |

☐ No change at this time

The Protective Action Decision Group recommends the following actions:

☐ SECTION 1: RETURN
☐ 0 - 2 miles ☐ 2 - 10 miles
☐ OTHER _____

☐ SECTION 2: RETURN
☐ 0 - 2 miles ☐ 2 - 10 miles ☐ Schools
☐ OTHER _____

☐ SECTION 3: RETURN
☐ 0 - 2 miles ☐ 2 - 10 miles
☐ OTHER _____

☐ SECTION 4: RETURN
☐ 0 - 2 miles ☐ 2 - 10 miles
☐ OTHER _____

Approved by: (signature)
PADG Chairperson/Dose Assessment Coordinator_____
Concurred by: (signature)
WA State Health Liaison _____

Map attached ☐

Attachment 8.3

RELOCATION AREA
PROTECTIVE ACTION RECOMMENDATION

Date _____

☐ Initial ☐ Revised Time _____

Establish/Revise (circle one) the relocation area boundary in accordance with the attached map.

☐ Relocate persons not yet evacuated from the relocation area.

☐ Change the status of those already evacuated from the Relocation Area to relocation status.

☐ Establish access control points around the Relocation Area and limit access to Emergency workers, residents with radiation protection escorts, and persons with temporary Emergency worker status.

Initial PAR Monitoring and Decontamination

☐ Establish monitoring stations at appropriate locations, (e.g., Access Control Points and Emergency Worker/Assistance Centers).

Revised PAR Monitoring and Decontamination

☐ Establish monitoring stations at access control points, and send those requiring decontamination to an Emergency Worker/Assistance Center.

☐ Have all monitoring and decontamination conducted at Emergency Worker/Assistance Centers.

☐ Establish monitoring and decontamination stations at access control points to the Relocation Area.

Initial PAR Dose Tracking

Establish Dose tracking at appropriate locations for any persons entering the relocation area, (e.g. Access Control Points and Emergency Worker/Assistance Centers).

Revised PAR Dose Tracking

☐ Establish Dose tracking at Emergency Worker/Assistance Centers.

☐ Establish dose tracking at access control points.

Other:

☐ Cancel PAR for administering KI to emergency workers.

☐ Terminate the relocation PAR.

Approved by:
PADG Chairperson/Dose Assessment Coordinator _____

Concurred by:
WA State Health Liaison _____

Attachment 8.4

# DETERMINING THE VALUE OF d(3)

| (d1) | (d2) | d(3) | (d1) | (d2) | d(3) | (d1) | (d2) | d(3) |
|---|---|---|---|---|---|---|---|---|
| 500uR/hr | 20 uR/hr | 2uR/hr | 500uR/hr | 20 uR/hr | 2uR/hr | 500uR/hr | 20 uR/hr | 2uR/hr |
| 5.0 | 5.5 | 5.9 | 5.5 | 6.0 | 6.4 | 6.0 | 6.5 | 6.9 |
| 5.0 | 6.0 | 6.8 | 5.5 | 6.5 | 7.3 | 6.0 | 7.0 | 7.8 |
| 5.0 | 6.5 | 7.8 | 5.5 | 7.0 | 8.3 | 6.0 | 7.5 | 8.8 |
| 5.0 | 7.0 | 8.9 | 5.5 | 7.5 | 9.4 | 6.0 | 8.0 | 9.8 |
| 5.0 | 7.5 | 10.0 | 5.5 | 8.0 | 10.5 | 6.0 | 8.5 | 10.9 |
| 5.0 | 8.0 | 11.2 | 5.5 | 8.5 | 11.6 | 6.0 | 9.0 | 12.0 |
| 5.0 | 8.5 | 12.4 | 5.5 | 9.0 | 12.8 | 6.0 | 9.5 | 13.2 |
| 5.0 | 9.0 | 13.7 | 5.5 | 9.5 | 14.0 | 6.0 | 10.0 | 14.4 |
| 5.0 | 9.5 | 15.0 | 5.5 | 10.0 | 15.3 | 6.0 | 10.5 | 15.7 |
| 5.0 | 10.0 | 16.4 | 5.5 | 10.5 | 16.7 | 6.0 | 11.0 | 17.0 |
| 5.0 | 10.5 | 17.9 | 5.5 | 11.0 | 18.1 | 6.0 | 11.5 | 18.3 |
| 5.0 | 11.0 | 19.3 | 5.5 | 11.5 | 19.5 | 6.0 | 12.0 | 19.7 |
| 5.0 | 11.5 | 20.9 | 5.5 | 12.0 | 21.0 | 6.0 | 12.5 | 21.1 |
| 5.0 | 12.0 | 22.4 | 5.5 | 12.5 | 22.5 | 6.0 | 13.0 | 22.6 |
| 5.0 | 12.5 | 24.1 | 5.5 | 13.0 | 24.1 | 6.0 | 13.5 | 24.1 |
| 5.0 | 13.0 | 25.8 | 5.5 | 13.5 | 25.7 | 6.0 | 14.0 | 25.7 |
| 5.0 | 13.5 | 27.5 | 5.5 | 14.0 | 27.3 | 6.0 | 14.5 | 27.3 |
| 5.0 | 14.0 | 29.2 | 5.5 | 14.5 | 29.0 | 6.0 | 15.0 | 28.9 |
| 5.0 | 14.5 | 31.1 | 5.5 | 15.0 | 30.7 | 6.0 | 15.5 | 30.6 |
| 5.0 | 15.0 | 32.9 | 5.5 | 15.5 | 32.5 | 6.0 | 16.0 | 32.3 |
| 5.0 | 15.5 | 34.8 | 5.5 | 16.0 | 34.3 | 6.0 | 16.5 | 34.0 |
| 5.0 | 16.0 | 36.8 | 5.5 | 16.5 | 36.2 | 6.0 | 17.0 | 35.8 |
| 5.0 | 16.5 | 38.8 | 5.5 | 17.0 | 38.1 | 6.0 | 17.5 | 37.6 |
| 5.0 | 17.0 | 40.8 | 5.5 | 17.5 | 40.1 | 6.0 | 18.0 | 39.5 |
| 5.0 | 17.5 | 42.9 | 5.5 | 18.0 | 42.0 | 6.0 | 18.5 | 41.4 |
| 5.0 | 18.0 | 45.0 | 5.5 | 18.5 | 44.1 | 6.0 | 19.0 | 43.3 |
| 5.0 | 18.5 | 47.2 | 5.5 | 19.0 | 46.1 | 6.0 | 19.5 | 45.3 |
| 5.0 | 19.0 | 49.4 | 5.5 | 19.5 | 48.2 | 6.0 | 20.0 | 47.3 |
| 5.0 | 19.5 | 51.6 | 5.5 | 20.0 | 50.4 | 6.0 | 20.5 | 49.4 |
| 5.0 | 20.0 | 53.9 | 5.5 | 20.5 | 52.5 | 6.0 | 21.0 | 51.5 |
| 5.0 | 20.5 | 56.2 | 5.5 | 21.0 | 54.8 | 6.0 | 21.5 | 53.6 |
| 5.0 | 21.0 | 58.6 | 5.5 | 21.5 | 57.0 | 6.0 | 22.0 | 55.7 |
| 5.0 | 21.5 | 61.0 | 5.5 | 22.0 | 59.3 | 6.0 | 22.5 | 57.9 |
| 5.0 | 22.0 | 63.5 | 5.5 | 22.5 | 61.6 | 6.0 | 23.0 | 60.1 |
| 5.0 | 22.5 | 66.0 | 5.5 | 23.0 | 64.0 | 6.0 | 23.5 | 62.4 |
| 5.0 | 23.0 | 68.5 | 5.5 | 23.5 | 66.4 | 6.0 | 24.0 | 64.7 |
| 5.0 | 23.5 | 71.1 | 5.5 | 24.0 | 68.9 | 6.0 | 24.5 | 67.0 |
| 5.0 | 24.0 | 73.7 | 5.5 | 24.5 | 71.3 | 6.0 | 25.0 | 69.4 |
| 5.0 | 24.5 | 76.4 | 5.5 | 25.0 | 73.8 | 6.0 | 25.5 | 71.8 |
| | | | | | | | | |

Attachment 8.5
Page 1 of 11

# DETERMINING THE VALUE OF d(3)

| (d1) | (d2) | d(3) | (d1) | (d2) | d(3) | (d1) | (d2) | d(3) |
|---|---|---|---|---|---|---|---|---|
| 500uR/hr | 20 uR/hr | 2uR/hr | 500uR/hr | 20 uR/hr | 2uR/hr | 500uR/hr | 20 uR/hr | 2uR/hr |
| 6.5 | 7.0 | 7.4 | 7.0 | 7.5 | 7.9 | 7.5 | 8.0 | 8.4 |
| 6.5 | 7.5 | 8.3 | 7.0 | 8.0 | 8.8 | 7.5 | 8.5 | 9.3 |
| 6.5 | 8.0 | 9.3 | 7.0 | 8.5 | 9.8 | 7.5 | 9.0 | 10.3 |
| 6.5 | 8.5 | 10.3 | 7.0 | 9.0 | 10.8 | 7.5 | 9.5 | 11.3 |
| 6.5 | 9.0 | 11.4 | 7.0 | 9.5 | 11.8 | 7.5 | 10.0 | 12.3 |
| 6.5 | 9.5 | 12.5 | 7.0 | 10.0 | 12.9 | 7.5 | 10.5 | 13.4 |
| 6.5 | 10.0 | 13.6 | 7.0 | 10.5 | 14.0 | 7.5 | 11.0 | 14.5 |
| 6.5 | 10.5 | 14.8 | 7.0 | 11.0 | 15.2 | 7.5 | 11.5 | 15.6 |
| 6.5 | 11.0 | 16.0 | 7.0 | 11.5 | 16.4 | 7.5 | 12.0 | 16.8 |
| 6.5 | 11.5 | 17.3 | 7.0 | 12.0 | 17.6 | 7.5 | 12.5 | 18.0 |
| 6.5 | 12.0 | 18.6 | 7.0 | 12.5 | 18.9 | 7.5 | 13.0 | 19.3 |
| 6.5 | 12.5 | 20.0 | 7.0 | 13.0 | 20.2 | 7.5 | 13.5 | 20.6 |
| 6.5 | 13.0 | 21.3 | 7.0 | 13.5 | 21.6 | 7.5 | 14.0 | 21.9 |
| 6.5 | 13.5 | 22.8 | 7.0 | 14.0 | 23.0 | 7.5 | 14.5 | 23.2 |
| 6.5 | 14.0 | 24.2 | 7.0 | 14.5 | 24.4 | 7.5 | 15.0 | 24.6 |
| 6.5 | 14.5 | 25.7 | 7.0 | 15.0 | 25.9 | 7.5 | 15.5 | 26.1 |
| 6.5 | 15.0 | 27.3 | 7.0 | 15.5 | 27.4 | 7.5 | 16.0 | 27.5 |
| 6.5 | 15.5 | 28.9 | 7.0 | 16.0 | 28.9 | 7.5 | 16.5 | 29.0 |
| 6.5 | 16.0 | 30.5 | 7.0 | 16.5 | 30.5 | 7.5 | 17.0 | 30.5 |
| 6.5 | 16.5 | 32.1 | 7.0 | 17.0 | 32.1 | 7.5 | 17.5 | 32.1 |
| 6.5 | 17.0 | 33.8 | 7.0 | 17.5 | 33.7 | 7.5 | 18.0 | 33.7 |
| 6.5 | 17.5 | 35.5 | 7.0 | 18.0 | 35.4 | 7.5 | 18.5 | 35.3 |
| 6.5 | 18.0 | 37.3 | 7.0 | 18.5 | 37.1 | 7.5 | 19.0 | 36.9 |
| 6.5 | 18.5 | 39.1 | 7.0 | 19.0 | 38.8 | 7.5 | 19.5 | 38.6 |
| 6.5 | 19.0 | 40.9 | 7.0 | 19.5 | 40.6 | 7.5 | 20.0 | 40.3 |
| 6.5 | 19.5 | 42.8 | 7.0 | 20.0 | 42.4 | 7.5 | 20.5 | 42.1 |
| 6.5 | 20.0 | 44.7 | 7.0 | 20.5 | 44.2 | 7.5 | 21.0 | 43.9 |
| 6.5 | 20.5 | 46.6 | 7.0 | 21.0 | 46.1 | 7.5 | 21.5 | 45.7 |
| 6.5 | 21.0 | 48.6 | 7.0 | 21.5 | 48.0 | 7.5 | 22.0 | 47.5 |
| 6.5 | 21.5 | 50.6 | 7.0 | 22.0 | 49.9 | 7.5 | 22.5 | 49.4 |
| 6.5 | 22.0 | 52.6 | 7.0 | 22.5 | 51.9 | 7.5 | 23.0 | 51.3 |
| 6.5 | 22.5 | 54.7 | 7.0 | 23.0 | 53.9 | 7.5 | 23.5 | 53.2 |
| 6.5 | 23.0 | 56.8 | 7.0 | 23.5 | 55.9 | 7.5 | 24.0 | 55.2 |
| 6.5 | 23.5 | 58.9 | 7.0 | 24.0 | 57.9 | 7.5 | 24.5 | 57.1 |
| 6.5 | 24.0 | 61.1 | 7.0 | 24.5 | 60.0 | 7.5 | 25.0 | 59.2 |
| 6.5 | 24.5 | 63.3 | 7.0 | 25.0 | 62.1 | 7.5 | 25.5 | 61.2 |
| 6.5 | 25.0 | 65.5 | 7.0 | 25.5 | 64.3 | 7.5 | 26.0 | 63.3 |
| 6.5 | 25.5 | 67.8 | 7.0 | 26.0 | 66.5 | 7.5 | 26.5 | 65.4 |
| 6.5 | 26.0 | 70.1 | 7.0 | 26.5 | 68.7 | 7.5 | 27.0 | 67.5 |
| | | | | | | | | |

Attachment 8.5
Page 2 of 11

# DETERMINING THE VALUE OF d(3)

| (d1) | (d2) | d(3) | (d1) | (d2) | d(3) | (d1) | (d2) | d(3) |
|---|---|---|---|---|---|---|---|---|
| 500uR/hr | 20 uR/hr | 2uR/hr | 500uR/hr | 20 uR/hr | 2uR/hr | 500uR/hr | 20 uR/hr | 2uR/hr |
| 8.0 | 8.5 | 8.9 | 8.5 | 9.0 | 9.4 | 9.0 | 9.5 | 9.9 |
| 8.0 | 9.0 | 9.8 | 8.5 | 9.5 | 10.3 | 9.0 | 10.0 | 10.8 |
| 8.0 | 9.5 | 10.7 | 8.5 | 10.0 | 11.2 | 9.0 | 10.5 | 11.7 |
| 8.0 | 10.0 | 11.7 | 8.5 | 10.5 | 12.2 | 9.0 | 11.0 | 12.7 |
| 8.0 | 10.5 | 12.8 | 8.5 | 11.0 | 13.2 | 9.0 | 11.5 | 13.7 |
| 8.0 | 11.0 | 13.8 | 8.5 | 11.5 | 14.3 | 9.0 | 12.0 | 14.7 |
| 8.0 | 11.5 | 14.9 | 8.5 | 12.0 | 15.4 | 9.0 | 12.5 | 15.8 |
| 8.0 | 12.0 | 16.0 | 8.5 | 12.5 | 16.5 | 9.0 | 13.0 | 16.9 |
| 8.0 | 12.5 | 17.2 | 8.5 | 13.0 | 17.6 | 9.0 | 13.5 | 18.0 |
| 8.0 | 13.0 | 18.4 | 8.5 | 13.5 | 18.8 | 9.0 | 14.0 | 19.2 |
| 8.0 | 13.5 | 19.6 | 8.5 | 14.0 | 20.0 | 9.0 | 14.5 | 20.4 |
| 8.0 | 14.0 | 20.9 | 8.5 | 14.5 | 21.2 | 9.0 | 15.0 | 21.6 |
| 8.0 | 14.5 | 22.2 | 8.5 | 15.0 | 22.5 | 9.0 | 15.5 | 22.9 |
| 8.0 | 15.0 | 23.5 | 8.5 | 15.5 | 23.8 | 9.0 | 16.0 | 24.1 |
| 8.0 | 15.5 | 24.9 | 8.5 | 16.0 | 25.2 | 9.0 | 16.5 | 25.5 |
| 8.0 | 16.0 | 26.3 | 8.5 | 16.5 | 26.5 | 9.0 | 17.0 | 26.8 |
| 8.0 | 16.5 | 27.7 | 8.5 | 17.0 | 27.9 | 9.0 | 17.5 | 28.2 |
| 8.0 | 17.0 | 29.1 | 8.5 | 17.5 | 29.3 | 9.0 | 18.0 | 29.6 |
| 8.0 | 17.5 | 30.6 | 8.5 | 18.0 | 30.8 | 9.0 | 18.5 | 31.0 |
| 8.0 | 18.0 | 32.2 | 8.5 | 18.5 | 32.3 | 9.0 | 19.0 | 32.4 |
| 8.0 | 18.5 | 33.7 | 8.5 | 19.0 | 33.8 | 9.0 | 19.5 | 33.9 |
| 8.0 | 19.0 | 35.3 | 8.5 | 19.5 | 35.3 | 9.0 | 20.0 | 35.4 |
| 8.0 | 19.5 | 36.9 | 8.5 | 20.0 | 36.9 | 9.0 | 20.5 | 36.9 |
| 8.0 | 20.0 | 38.5 | 8.5 | 20.5 | 38.5 | 9.0 | 21.0 | 38.5 |
| 8.0 | 20.5 | 40.2 | 8.5 | 21.0 | 40.1 | 9.0 | 21.5 | 40.1 |
| 8.0 | 21.0 | 41.9 | 8.5 | 21.5 | 41.8 | 9.0 | 22.0 | 41.7 |
| 8.0 | 21.5 | 43.6 | 8.5 | 22.0 | 43.4 | 9.0 | 22.5 | 43.3 |
| 8.0 | 22.0 | 45.4 | 8.5 | 22.5 | 45.1 | 9.0 | 23.0 | 45.0 |
| 8.0 | 22.5 | 47.1 | 8.5 | 23.0 | 46.9 | 9.0 | 23.5 | 46.7 |
| 8.0 | 23.0 | 49.0 | 8.5 | 23.5 | 48.6 | 9.0 | 24.0 | 48.4 |
| 8.0 | 23.5 | 50.8 | 8.5 | 24.0 | 50.4 | 9.0 | 24.5 | 50.2 |
| 8.0 | 24.0 | 52.7 | 8.5 | 24.5 | 52.2 | 9.0 | 25.0 | 51.9 |
| 8.0 | 24.5 | 54.6 | 8.5 | 25.0 | 54.1 | 9.0 | 25.5 | 53.7 |
| 8.0 | 25.0 | 56.5 | 8.5 | 25.5 | 56.0 | 9.0 | 26.0 | 55.5 |
| 8.0 | 25.5 | 58.4 | 8.5 | 26.0 | 57.9 | 9.0 | 26.5 | 57.4 |
| 8.0 | 26.0 | 60.4 | 8.5 | 26.5 | 59.8 | 9.0 | 27.0 | 59.2 |
| 8.0 | 26.5 | 62.4 | 8.5 | 27.0 | 61.7 | 9.0 | 27.5 | 61.1 |
| 8.0 | 27.0 | 64.5 | 8.5 | 27.5 | 63.7 | 9.0 | 28.0 | 63.1 |
| 8.0 | 27.5 | 66.5 | 8.5 | 28.0 | 65.7 | 9.0 | 28.5 | 65.0 |
| | | | | | | | | |

# DETERMINING THE VALUE OF d(3)

| (d1) | (d2) | d(3) | (d1) | (d2) | d(3) | (d1) | (d2) | d(3) |
|---|---|---|---|---|---|---|---|---|
| 500uR/hr | 20 uR/hr | 2uR/hr | 500uR/hr | 20 uR/hr | 2uR/hr | 500uR/hr | 20 uR/hr | 2uR/hr |
| 9.5 | 10.0 | 10.4 | 10.0 | 10.5 | 10.9 | 10.5 | 11.0 | 11.4 |
| 9.5 | 10.5 | 11.3 | 10.0 | 11.0 | 11.8 | 10.5 | 11.5 | 12.3 |
| 9.5 | 11.0 | 12.2 | 10.0 | 11.5 | 12.7 | 10.5 | 12.0 | 13.2 |
| 9.5 | 11.5 | 13.2 | 10.0 | 12.0 | 13.7 | 10.5 | 12.5 | 14.2 |
| 9.5 | 12.0 | 14.2 | 10.0 | 12.5 | 14.7 | 10.5 | 13.0 | 15.1 |
| 9.5 | 12.5 | 15.2 | 10.0 | 13.0 | 15.7 | 10.5 | 13.5 | 16.2 |
| 9.5 | 13.0 | 16.3 | 10.0 | 13.5 | 16.7 | 10.5 | 14.0 | 17.2 |
| 9.5 | 13.5 | 17.4 | 10.0 | 14.0 | 17.8 | 10.5 | 14.5 | 18.3 |
| 9.5 | 14.0 | 18.5 | 10.0 | 14.5 | 18.9 | 10.5 | 15.0 | 19.4 |
| 9.5 | 14.5 | 19.6 | 10.0 | 15.0 | 20.0 | 10.5 | 15.5 | 20.5 |
| 9.5 | 15.0 | 20.8 | 10.0 | 15.5 | 21.2 | 10.5 | 16.0 | 21.6 |
| 9.5 | 15.5 | 22.0 | 10.0 | 16.0 | 22.4 | 10.5 | 16.5 | 22.8 |
| 9.5 | 16.0 | 23.2 | 10.0 | 16.5 | 23.6 | 10.5 | 17.0 | 24.0 |
| 9.5 | 16.5 | 24.5 | 10.0 | 17.0 | 24.8 | 10.5 | 17.5 | 25.2 |
| 9.5 | 17.0 | 25.8 | 10.0 | 17.5 | 26.1 | 10.5 | 18.0 | 26.5 |
| 9.5 | 17.5 | 27.1 | 10.0 | 18.0 | 27.4 | 10.5 | 18.5 | 27.7 |
| 9.5 | 18.0 | 28.4 | 10.0 | 18.5 | 28.7 | 10.5 | 19.0 | 29.0 |
| 9.5 | 18.5 | 29.8 | 10.0 | 19.0 | 30.1 | 10.5 | 19.5 | 30.4 |
| 9.5 | 19.0 | 31.2 | 10.0 | 19.5 | 31.4 | 10.5 | 20.0 | 31.7 |
| 9.5 | 19.5 | 32.6 | 10.0 | 20.0 | 32.8 | 10.5 | 20.5 | 33.1 |
| 9.5 | 20.0 | 34.1 | 10.0 | 20.5 | 34.3 | 10.5 | 21.0 | 34.5 |
| 9.5 | 20.5 | 35.5 | 10.0 | 21.0 | 35.7 | 10.5 | 21.5 | 35.9 |
| 9.5 | 21.0 | 37.0 | 10.0 | 21.5 | 37.2 | 10.5 | 22.0 | 37.3 |
| 9.5 | 21.5 | 38.6 | 10.0 | 22.0 | 38.7 | 10.5 | 22.5 | 38.8 |
| 9.5 | 22.0 | 40.1 | 10.0 | 22.5 | 40.2 | 10.5 | 23.0 | 40.3 |
| 9.5 | 22.5 | 41.7 | 10.0 | 23.0 | 41.7 | 10.5 | 23.5 | 41.8 |
| 9.5 | 23.0 | 43.3 | 10.0 | 23.5 | 43.3 | 10.5 | 24.0 | 43.4 |
| 9.5 | 23.5 | 44.9 | 10.0 | 24.0 | 44.9 | 10.5 | 24.5 | 44.9 |
| 9.5 | 24.0 | 46.6 | 10.0 | 24.5 | 46.5 | 10.5 | 25.0 | 46.5 |
| 9.5 | 24.5 | 48.2 | 10.0 | 25.0 | 48.2 | 10.5 | 25.5 | 48.1 |
| 9.5 | 25.0 | 50.0 | 10.0 | 25.5 | 49.8 | 10.5 | 26.0 | 49.7 |
| 9.5 | 25.5 | 51.7 | 10.0 | 26.0 | 51.5 | 10.5 | 26.5 | 51.4 |
| 9.5 | 26.0 | 53.4 | 10.0 | 26.5 | 53.2 | 10.5 | 27.0 | 53.1 |
| 9.5 | 26.5 | 55.2 | 10.0 | 27.0 | 54.9 | 10.5 | 27.5 | 54.8 |
| 9.5 | 27.0 | 57.0 | 10.0 | 27.5 | 56.7 | 10.5 | 28.0 | 56.5 |
| 9.5 | 27.5 | 58.8 | 10.0 | 28.0 | 58.5 | 10.5 | 28.5 | 58.2 |
| 9.5 | 28.0 | 60.7 | 10.0 | 28.5 | 60.3 | 10.5 | 29.0 | 60.0 |
| 9.5 | 28.5 | 62.5 | 10.0 | 29.0 | 62.1 | 10.5 | 29.5 | 61.8 |
| 9.5 | 29.0 | 64.4 | 10.0 | 29.5 | 64.0 | 10.5 | 30.0 | 63.6 |
| | | | | | | | | |

# DETERMINING THE VALUE OF d(3)

| (d1) | (d2) | d(3) | (d1) | (d2) | d(3) | (d1) | (d2) | d(3) |
|---|---|---|---|---|---|---|---|---|
| 500uR/hr | 20 uR/hr | 2uR/hr | 500uR/hr | 20 uR/hr | 2uR/hr | 500uR/hr | 20 uR/hr | 2uR/hr |
| 11.0 | 11.5 | 11.9 | 11.5 | 12.0 | 12.4 | 12.0 | 12.5 | 12.9 |
| 11.0 | 12.0 | 12.8 | 11.5 | 12.5 | 13.3 | 12.0 | 13.0 | 13.8 |
| 11.0 | 12.5 | 13.7 | 11.5 | 13.0 | 14.2 | 12.0 | 13.5 | 14.7 |
| 11.0 | 13.0 | 14.7 | 11.5 | 13.5 | 15.1 | 12.0 | 14.0 | 15.6 |
| 11.0 | 13.5 | 15.6 | 11.5 | 14.0 | 16.1 | 12.0 | 14.5 | 16.6 |
| 11.0 | 14.0 | 16.6 | 11.5 | 14.5 | 17.1 | 12.0 | 15.0 | 17.6 |
| 11.0 | 14.5 | 17.7 | 11.5 | 15.0 | 18.1 | 12.0 | 15.5 | 18.6 |
| 11.0 | 15.0 | 18.7 | 11.5 | 15.5 | 19.2 | 12.0 | 16.0 | 19.7 |
| 11.0 | 15.5 | 19.8 | 11.5 | 16.0 | 20.3 | 12.0 | 16.5 | 20.7 |
| 11.0 | 16.0 | 20.9 | 11.5 | 16.5 | 21.4 | 12.0 | 17.0 | 21.8 |
| 11.0 | 16.5 | 22.1 | 11.5 | 17.0 | 22.5 | 12.0 | 17.5 | 22.9 |
| 11.0 | 17.0 | 23.2 | 11.5 | 17.5 | 23.6 | 12.0 | 18.0 | 24.1 |
| 11.0 | 17.5 | 24.4 | 11.5 | 18.0 | 24.8 | 12.0 | 18.5 | 25.2 |
| 11.0 | 18.0 | 25.6 | 11.5 | 18.5 | 26.0 | 12.0 | 19.0 | 26.4 |
| 11.0 | 18.5 | 26.8 | 11.5 | 19.0 | 27.2 | 12.0 | 19.5 | 27.6 |
| 11.0 | 19.0 | 28.1 | 11.5 | 19.5 | 28.5 | 12.0 | 20.0 | 28.8 |
| 11.0 | 19.5 | 29.4 | 11.5 | 20.0 | 29.7 | 12.0 | 20.5 | 30.1 |
| 11.0 | 20.0 | 30.7 | 11.5 | 20.5 | 31.0 | 12.0 | 21.0 | 31.3 |
| 11.0 | 20.5 | 32.0 | 11.5 | 21.0 | 32.3 | 12.0 | 21.5 | 32.6 |
| 11.0 | 21.0 | 33.4 | 11.5 | 21.5 | 33.6 | 12.0 | 22.0 | 33.9 |
| 11.0 | 21.5 | 34.7 | 11.5 | 22.0 | 35.0 | 12.0 | 22.5 | 35.3 |
| 11.0 | 22.0 | 36.1 | 11.5 | 22.5 | 36.4 | 12.0 | 23.0 | 36.6 |
| 11.0 | 22.5 | 37.5 | 11.5 | 23.0 | 37.8 | 12.0 | 23.5 | 38.0 |
| 11.0 | 23.0 | 39.0 | 11.5 | 23.5 | 39.2 | 12.0 | 24.0 | 39.4 |
| 11.0 | 23.5 | 40.4 | 11.5 | 24.0 | 40.6 | 12.0 | 24.5 | 40.8 |
| 11.0 | 24.0 | 41.9 | 11.5 | 24.5 | 42.1 | 12.0 | 25.0 | 42.3 |
| 11.0 | 24.5 | 43.4 | 11.5 | 25.0 | 43.6 | 12.0 | 25.5 | 43.7 |
| 11.0 | 25.0 | 45.0 | 11.5 | 25.5 | 45.1 | 12.0 | 26.0 | 45.2 |
| 11.0 | 25.5 | 46.5 | 11.5 | 26.0 | 46.6 | 12.0 | 26.5 | 46.7 |
| 11.0 | 26.0 | 48.1 | 11.5 | 26.5 | 48.1 | 12.0 | 27.0 | 48.2 |
| 11.0 | 26.5 | 49.7 | 11.5 | 27.0 | 49.7 | 12.0 | 27.5 | 49.8 |
| 11.0 | 27.0 | 51.3 | 11.5 | 27.5 | 51.3 | 12.0 | 28.0 | 51.3 |
| 11.0 | 27.5 | 53.0 | 11.5 | 28.0 | 52.9 | 12.0 | 28.5 | 52.9 |
| 11.0 | 28.0 | 54.6 | 11.5 | 28.5 | 54.5 | 12.0 | 29.0 | 54.5 |
| 11.0 | 28.5 | 56.3 | 11.5 | 29.0 | 56.2 | 12.0 | 29.5 | 56.1 |
| 11.0 | 29.0 | 58.0 | 11.5 | 29.5 | 57.9 | 12.0 | 30.0 | 57.8 |
| 11.0 | 29.5 | 59.7 | 11.5 | 30.0 | 59.6 | 12.0 | 30.5 | 59.4 |
| 11.0 | 30.0 | 61.5 | 11.5 | 30.5 | 61.3 | 12.0 | 31.0 | 61.1 |
| 11.0 | 30.5 | 63.3 | 11.5 | 31.0 | 63.0 | 12.0 | 31.5 | 62.8 |
| | | | | | | | | |

# DETERMINING THE VALUE OF d(3)

| (d1) | (d2) | d(3) | (d1) | (d2) | d(3) | (d1) | (d2) | d(3) |
|---|---|---|---|---|---|---|---|---|
| 500uR/hr | 20 uR/hr | 2uR/hr | 500uR/hr | 20 uR/hr | 2uR/hr | 500uR/hr | 20 uR/hr | 2uR/hr |
| 12.5 | 13.0 | 13.4 | 13.0 | 13.5 | 13.9 | 13.5 | 14.0 | 14.4 |
| 12.5 | 13.5 | 14.3 | 13.0 | 14.0 | 14.8 | 13.5 | 14.5 | 15.3 |
| 12.5 | 14.0 | 15.2 | 13.0 | 14.5 | 15.7 | 13.5 | 15.0 | 16.2 |
| 12.5 | 14.5 | 16.1 | 13.0 | 15.0 | 16.6 | 13.5 | 15.5 | 17.1 |
| 12.5 | 15.0 | 17.1 | 13.0 | 15.5 | 17.6 | 13.5 | 16.0 | 18.1 |
| 12.5 | 15.5 | 18.1 | 13.0 | 16.0 | 18.6 | 13.5 | 16.5 | 19.0 |
| 12.5 | 16.0 | 19.1 | 13.0 | 16.5 | 19.6 | 13.5 | 17.0 | 20.0 |
| 12.5 | 16.5 | 20.1 | 13.0 | 17.0 | 20.6 | 13.5 | 17.5 | 21.1 |
| 12.5 | 17.0 | 21.2 | 13.0 | 17.5 | 21.6 | 13.5 | 18.0 | 22.1 |
| 12.5 | 17.5 | 22.3 | 13.0 | 18.0 | 22.7 | 13.5 | 18.5 | 23.2 |
| 12.5 | 18.0 | 23.4 | 13.0 | 18.5 | 23.8 | 13.5 | 19.0 | 24.3 |
| 12.5 | 18.5 | 24.5 | 13.0 | 19.0 | 24.9 | 13.5 | 19.5 | 25.4 |
| 12.5 | 19.0 | 25.6 | 13.0 | 19.5 | 26.1 | 13.5 | 20.0 | 26.5 |
| 12.5 | 19.5 | 26.8 | 13.0 | 20.0 | 27.2 | 13.5 | 20.5 | 27.6 |
| 12.5 | 20.0 | 28.0 | 13.0 | 20.5 | 28.4 | 13.5 | 21.0 | 28.8 |
| 12.5 | 20.5 | 29.2 | 13.0 | 21.0 | 29.6 | 13.5 | 21.5 | 30.0 |
| 12.5 | 21.0 | 30.4 | 13.0 | 21.5 | 30.8 | 13.5 | 22.0 | 31.2 |
| 12.5 | 21.5 | 31.7 | 13.0 | 22.0 | 32.1 | 13.5 | 22.5 | 32.4 |
| 12.5 | 22.0 | 33.0 | 13.0 | 22.5 | 33.3 | 13.5 | 23.0 | 33.7 |
| 12.5 | 22.5 | 34.3 | 13.0 | 23.0 | 34.6 | 13.5 | 23.5 | 34.9 |
| 12.5 | 23.0 | 35.6 | 13.0 | 23.5 | 35.9 | 13.5 | 24.0 | 36.2 |
| 12.5 | 23.5 | 36.9 | 13.0 | 24.0 | 37.2 | 13.5 | 24.5 | 37.5 |
| 12.5 | 24.0 | 38.3 | 13.0 | 24.5 | 38.6 | 13.5 | 25.0 | 38.8 |
| 12.5 | 24.5 | 39.6 | 13.0 | 25.0 | 39.9 | 13.5 | 25.5 | 40.2 |
| 12.5 | 25.0 | 41.0 | 13.0 | 25.5 | 41.3 | 13.5 | 26.0 | 41.6 |
| 12.5 | 25.5 | 42.5 | 13.0 | 26.0 | 42.7 | 13.5 | 26.5 | 42.9 |
| 12.5 | 26.0 | 43.9 | 13.0 | 26.5 | 44.1 | 13.5 | 27.0 | 44.3 |
| 12.5 | 26.5 | 45.4 | 13.0 | 27.0 | 45.5 | 13.5 | 27.5 | 45.7 |
| 12.5 | 27.0 | 46.8 | 13.0 | 27.5 | 47.0 | 13.5 | 28.0 | 47.2 |
| 12.5 | 27.5 | 48.3 | 13.0 | 28.0 | 48.5 | 13.5 | 28.5 | 48.6 |
| 12.5 | 28.0 | 49.9 | 13.0 | 28.5 | 50.0 | 13.5 | 29.0 | 50.1 |
| 12.5 | 28.5 | 51.4 | 13.0 | 29.0 | 51.5 | 13.5 | 29.5 | 51.6 |
| 12.5 | 29.0 | 52.9 | 13.0 | 29.5 | 53.0 | 13.5 | 30.0 | 53.1 |
| 12.5 | 29.5 | 54.5 | 13.0 | 30.0 | 54.6 | 13.5 | 30.5 | 54.6 |
| 12.5 | 30.0 | 56.1 | 13.0 | 30.5 | 56.1 | 13.5 | 31.0 | 56.2 |
| 12.5 | 30.5 | 57.7 | 13.0 | 31.0 | 57.7 | 13.5 | 31.5 | 57.7 |
| 12.5 | 31.0 | 59.4 | 13.0 | 31.5 | 59.4 | 13.5 | 32.0 | 59.4 |
| 12.5 | 31.5 | 61.0 | 13.0 | 32.0 | 61.0 | 13.5 | 32.5 | 61.0 |
| 12.5 | 32.0 | 62.7 | 13.0 | 32.5 | 62.7 | 13.5 | 33.0 | 62.7 |
| | | | | | | | | |

# DETERMINING THE VALUE OF d(3)

| (d1) | (d2) | d(3) | (d1) | (d2) | d(3) | (d1) | (d2) | d(3) |
|---|---|---|---|---|---|---|---|---|
| 500uR/hr | 20 uR/hr | 2uR/hr | 500uR/hr | 20 uR/hr | 2uR/hr | 500uR/hr | 20 uR/hr | 2uR/hr |
| 14.0 | 14.5 | 14.9 | 14.5 | 15.0 | 15.4 | 15.0 | 15.5 | 15.9 |
| 14.0 | 15.0 | 15.8 | 14.5 | 15.5 | 16.3 | 15.0 | 16.0 | 16.8 |
| 14.0 | 15.5 | 16.7 | 14.5 | 16.0 | 17.2 | 15.0 | 16.5 | 17.7 |
| 14.0 | 16.0 | 17.6 | 14.5 | 16.5 | 18.1 | 15.0 | 17.0 | 18.6 |
| 14.0 | 16.5 | 18.6 | 14.5 | 17.0 | 19.0 | 15.0 | 17.5 | 19.5 |
| 14.0 | 17.0 | 19.5 | 14.5 | 17.5 | 20.0 | 15.0 | 18.0 | 20.5 |
| 14.0 | 17.5 | 20.5 | 14.5 | 18.0 | 21.0 | 15.0 | 18.5 | 21.5 |
| 14.0 | 18.0 | 21.5 | 14.5 | 18.5 | 22.0 | 15.0 | 19.0 | 22.5 |
| 14.0 | 18.5 | 22.6 | 14.5 | 19.0 | 23.1 | 15.0 | 19.5 | 23.5 |
| 14.0 | 19.0 | 23.6 | 14.5 | 19.5 | 24.1 | 15.0 | 20.0 | 24.6 |
| 14.0 | 19.5 | 24.7 | 14.5 | 20.0 | 25.2 | 15.0 | 20.5 | 25.6 |
| 14.0 | 20.0 | 25.8 | 14.5 | 20.5 | 26.3 | 15.0 | 21.0 | 26.7 |
| 14.0 | 20.5 | 26.9 | 14.5 | 21.0 | 27.4 | 15.0 | 21.5 | 27.8 |
| 14.0 | 21.0 | 28.1 | 14.5 | 21.5 | 28.5 | 15.0 | 22.0 | 28.9 |
| 14.0 | 21.5 | 29.2 | 14.5 | 22.0 | 29.6 | 15.0 | 22.5 | 30.1 |
| 14.0 | 22.0 | 30.4 | 14.5 | 22.5 | 30.8 | 15.0 | 23.0 | 31.2 |
| 14.0 | 22.5 | 31.6 | 14.5 | 23.0 | 32.0 | 15.0 | 23.5 | 32.4 |
| 14.0 | 23.0 | 32.8 | 14.5 | 23.5 | 33.2 | 15.0 | 24.0 | 33.6 |
| 14.0 | 23.5 | 34.0 | 14.5 | 24.0 | 34.4 | 15.0 | 24.5 | 34.8 |
| 14.0 | 24.0 | 35.3 | 14.5 | 24.5 | 35.7 | 15.0 | 25.0 | 36.0 |
| 14.0 | 24.5 | 36.6 | 14.5 | 25.0 | 36.9 | 15.0 | 25.5 | 37.3 |
| 14.0 | 25.0 | 37.9 | 14.5 | 25.5 | 38.2 | 15.0 | 26.0 | 38.5 |
| 14.0 | 25.5 | 39.2 | 14.5 | 26.0 | 39.5 | 15.0 | 26.5 | 39.8 |
| 14.0 | 26.0 | 40.5 | 14.5 | 26.5 | 40.8 | 15.0 | 27.0 | 41.1 |
| 14.0 | 26.5 | 41.8 | 14.5 | 27.0 | 42.1 | 15.0 | 27.5 | 42.4 |
| 14.0 | 27.0 | 43.2 | 14.5 | 27.5 | 43.5 | 15.0 | 28.0 | 43.8 |
| 14.0 | 27.5 | 44.6 | 14.5 | 28.0 | 44.8 | 15.0 | 28.5 | 45.1 |
| 14.0 | 28.0 | 46.0 | 14.5 | 28.5 | 46.2 | 15.0 | 29.0 | 46.5 |
| 14.0 | 28.5 | 47.4 | 14.5 | 29.0 | 47.6 | 15.0 | 29.5 | 47.9 |
| 14.0 | 29.0 | 48.8 | 14.5 | 29.5 | 49.0 | 15.0 | 30.0 | 49.3 |
| 14.0 | 29.5 | 50.3 | 14.5 | 30.0 | 50.5 | 15.0 | 30.5 | 50.7 |
| 14.0 | 30.0 | 51.7 | 14.5 | 30.5 | 51.9 | 15.0 | 31.0 | 52.1 |
| 14.0 | 30.5 | 53.2 | 14.5 | 31.0 | 53.4 | 15.0 | 31.5 | 53.6 |
| 14.0 | 31.0 | 54.7 | 14.5 | 31.5 | 54.9 | 15.0 | 32.0 | 55.0 |
| 14.0 | 31.5 | 56.3 | 14.5 | 32.0 | 56.4 | 15.0 | 32.5 | 56.5 |
| 14.0 | 32.0 | 57.8 | 14.5 | 32.5 | 57.9 | 15.0 | 33.0 | 58.0 |
| 14.0 | 32.5 | 59.4 | 14.5 | 33.0 | 59.4 | 15.0 | 33.5 | 59.5 |
| 14.0 | 33.0 | 60.9 | 14.5 | 33.5 | 61.0 | 15.0 | 34.0 | 61.1 |
| 14.0 | 33.5 | 62.5 | 14.5 | 34.0 | 62.6 | 15.0 | 34.5 | 62.6 |
| | | | | | | | | |

# DETERMINING THE VALUE OF d(3)

| (d1) | (d2) | d(3) | (d1) | (d2) | d(3) | (d1) | (d2) | d(3) |
|---|---|---|---|---|---|---|---|---|
| 500uR/hr | 20 uR/hr | 2uR/hr | 500uR/hr | 20 uR/hr | 2uR/hr | 500uR/hr | 20 uR/hr | 2uR/hr |
| 15.5 | 16.0 | 16.4 | 16.0 | 16.5 | 16.9 | 16.5 | 17.0 | 17.4 |
| 15.5 | 16.5 | 17.3 | 16.0 | 17.0 | 17.8 | 16.5 | 17.5 | 18.3 |
| 15.5 | 17.0 | 18.2 | 16.0 | 17.5 | 18.7 | 16.5 | 18.0 | 19.2 |
| 15.5 | 17.5 | 19.1 | 16.0 | 18.0 | 19.6 | 16.5 | 18.5 | 20.1 |
| 15.5 | 18.0 | 20.0 | 16.0 | 18.5 | 20.5 | 16.5 | 19.0 | 21.0 |
| 15.5 | 18.5 | 21.0 | 16.0 | 19.0 | 21.5 | 16.5 | 19.5 | 22.0 |
| 15.5 | 19.0 | 22.0 | 16.0 | 19.5 | 22.5 | 16.5 | 20.0 | 23.0 |
| 15.5 | 19.5 | 23.0 | 16.0 | 20.0 | 23.5 | 16.5 | 20.5 | 23.9 |
| 15.5 | 20.0 | 24.0 | 16.0 | 20.5 | 24.5 | 16.5 | 21.0 | 25.0 |
| 15.5 | 20.5 | 25.0 | 16.0 | 21.0 | 25.5 | 16.5 | 21.5 | 26.0 |
| 15.5 | 21.0 | 26.1 | 16.0 | 21.5 | 26.6 | 16.5 | 22.0 | 27.0 |
| 15.5 | 21.5 | 27.2 | 16.0 | 22.0 | 27.6 | 16.5 | 22.5 | 28.1 |
| 15.5 | 22.0 | 28.3 | 16.0 | 22.5 | 28.7 | 16.5 | 23.0 | 29.2 |
| 15.5 | 22.5 | 29.4 | 16.0 | 23.0 | 29.8 | 16.5 | 23.5 | 30.3 |
| 15.5 | 23.0 | 30.5 | 16.0 | 23.5 | 30.9 | 16.5 | 24.0 | 31.4 |
| 15.5 | 23.5 | 31.6 | 16.0 | 24.0 | 32.1 | 16.5 | 24.5 | 32.5 |
| 15.5 | 24.0 | 32.8 | 16.0 | 24.5 | 33.2 | 16.5 | 25.0 | 33.7 |
| 15.5 | 24.5 | 34.0 | 16.0 | 25.0 | 34.4 | 16.5 | 25.5 | 34.8 |
| 15.5 | 25.0 | 35.2 | 16.0 | 25.5 | 35.6 | 16.5 | 26.0 | 36.0 |
| 15.5 | 25.5 | 36.4 | 16.0 | 26.0 | 36.8 | 16.5 | 26.5 | 37.2 |
| 15.5 | 26.0 | 37.6 | 16.0 | 26.5 | 38.0 | 16.5 | 27.0 | 38.4 |
| 15.5 | 26.5 | 38.9 | 16.0 | 27.0 | 39.3 | 16.5 | 27.5 | 39.6 |
| 15.5 | 27.0 | 40.2 | 16.0 | 27.5 | 40.5 | 16.5 | 28.0 | 40.9 |
| 15.5 | 27.5 | 41.4 | 16.0 | 28.0 | 41.8 | 16.5 | 28.5 | 42.1 |
| 15.5 | 28.0 | 42.7 | 16.0 | 28.5 | 43.1 | 16.5 | 29.0 | 43.4 |
| 15.5 | 28.5 | 44.1 | 16.0 | 29.0 | 44.4 | 16.5 | 29.5 | 44.7 |
| 15.5 | 29.0 | 45.4 | 16.0 | 29.5 | 45.7 | 16.5 | 30.0 | 46.0 |
| 15.5 | 29.5 | 46.7 | 16.0 | 30.0 | 47.0 | 16.5 | 30.5 | 47.3 |
| 15.5 | 30.0 | 48.1 | 16.0 | 30.5 | 48.4 | 16.5 | 31.0 | 48.7 |
| 15.5 | 30.5 | 49.5 | 16.0 | 31.0 | 49.8 | 16.5 | 31.5 | 50.0 |
| 15.5 | 31.0 | 50.9 | 16.0 | 31.5 | 51.1 | 16.5 | 32.0 | 51.4 |
| 15.5 | 31.5 | 52.3 | 16.0 | 32.0 | 52.5 | 16.5 | 32.5 | 52.8 |
| 15.5 | 32.0 | 53.7 | 16.0 | 32.5 | 54.0 | 16.5 | 33.0 | 54.2 |
| 15.5 | 32.5 | 55.2 | 16.0 | 33.0 | 55.4 | 16.5 | 33.5 | 55.6 |
| 15.5 | 33.0 | 56.7 | 16.0 | 33.5 | 56.8 | 16.5 | 34.0 | 57.0 |
| 15.5 | 33.5 | 58.1 | 16.0 | 34.0 | 58.3 | 16.5 | 34.5 | 58.5 |
| 15.5 | 34.0 | 59.6 | 16.0 | 34.5 | 59.8 | 16.5 | 35.0 | 59.9 |
| 15.5 | 34.5 | 61.1 | 16.0 | 35.0 | 61.3 | 16.5 | 35.5 | 61.4 |
| 15.5 | 35.0 | 62.7 | 16.0 | 35.5 | 62.8 | 16.5 | 36.0 | 62.9 |
| | | | | | | | | |

# DETERMINING THE VALUE OF d(3)

| (d1) | (d2) | d(3) | (d1) | (d2) | d(3) | (d1) | (d2) | d(3) |
|---|---|---|---|---|---|---|---|---|
| 500uR/hr | 20 uR/hr | 2uR/hr | 500uR/hr | 20 uR/hr | 2uR/hr | 500uR/hr | 20 uR/hr | 2uR/hr |
| 17.0 | 17.5 | 17.9 | 17.5 | 18.0 | 18.4 | 18.0 | 18.5 | 18.9 |
| 17.0 | 18.0 | 18.8 | 17.5 | 18.5 | 19.3 | 18.0 | 19.0 | 19.7 |
| 17.0 | 18.5 | 19.7 | 17.5 | 19.0 | 20.2 | 18.0 | 19.5 | 20.6 |
| 17.0 | 19.0 | 20.6 | 17.5 | 19.5 | 21.1 | 18.0 | 20.0 | 21.6 |
| 17.0 | 19.5 | 21.5 | 17.5 | 20.0 | 22.0 | 18.0 | 20.5 | 22.5 |
| 17.0 | 20.0 | 22.5 | 17.5 | 20.5 | 23.0 | 18.0 | 21.0 | 23.4 |
| 17.0 | 20.5 | 23.4 | 17.5 | 21.0 | 23.9 | 18.0 | 21.5 | 24.4 |
| 17.0 | 21.0 | 24.4 | 17.5 | 21.5 | 24.9 | 18.0 | 22.0 | 25.4 |
| 17.0 | 21.5 | 25.4 | 17.5 | 22.0 | 25.9 | 18.0 | 22.5 | 26.4 |
| 17.0 | 22.0 | 26.5 | 17.5 | 22.5 | 26.9 | 18.0 | 23.0 | 27.4 |
| 17.0 | 22.5 | 27.5 | 17.5 | 23.0 | 28.0 | 18.0 | 23.5 | 28.4 |
| 17.0 | 23.0 | 28.6 | 17.5 | 23.5 | 29.0 | 18.0 | 24.0 | 29.5 |
| 17.0 | 23.5 | 29.6 | 17.5 | 24.0 | 30.1 | 18.0 | 24.5 | 30.5 |
| 17.0 | 24.0 | 30.7 | 17.5 | 24.5 | 31.2 | 18.0 | 25.0 | 31.6 |
| 17.0 | 24.5 | 31.8 | 17.5 | 25.0 | 32.3 | 18.0 | 25.5 | 32.7 |
| 17.0 | 25.0 | 32.9 | 17.5 | 25.5 | 33.4 | 18.0 | 26.0 | 33.8 |
| 17.0 | 25.5 | 34.1 | 17.5 | 26.0 | 34.5 | 18.0 | 26.5 | 34.9 |
| 17.0 | 26.0 | 35.2 | 17.5 | 26.5 | 35.7 | 18.0 | 27.0 | 36.1 |
| 17.0 | 26.5 | 36.4 | 17.5 | 27.0 | 36.8 | 18.0 | 27.5 | 37.2 |
| 17.0 | 27.0 | 37.6 | 17.5 | 27.5 | 38.0 | 18.0 | 28.0 | 38.4 |
| 17.0 | 27.5 | 38.8 | 17.5 | 28.0 | 39.2 | 18.0 | 28.5 | 39.6 |
| 17.0 | 28.0 | 40.0 | 17.5 | 28.5 | 40.4 | 18.0 | 29.0 | 40.8 |
| 17.0 | 28.5 | 41.2 | 17.5 | 29.0 | 41.6 | 18.0 | 29.5 | 42.0 |
| 17.0 | 29.0 | 42.5 | 17.5 | 29.5 | 42.9 | 18.0 | 30.0 | 43.2 |
| 17.0 | 29.5 | 43.8 | 17.5 | 30.0 | 44.1 | 18.0 | 30.5 | 44.5 |
| 17.0 | 30.0 | 45.0 | 17.5 | 30.5 | 45.4 | 18.0 | 31.0 | 45.7 |
| 17.0 | 30.5 | 46.3 | 17.5 | 31.0 | 46.7 | 18.0 | 31.5 | 47.0 |
| 17.0 | 31.0 | 47.6 | 17.5 | 31.5 | 48.0 | 18.0 | 32.0 | 48.3 |
| 17.0 | 31.5 | 49.0 | 17.5 | 32.0 | 49.3 | 18.0 | 32.5 | 49.6 |
| 17.0 | 32.0 | 50.3 | 17.5 | 32.5 | 50.6 | 18.0 | 33.0 | 50.9 |
| 17.0 | 32.5 | 51.7 | 17.5 | 33.0 | 51.9 | 18.0 | 33.5 | 52.2 |
| 17.0 | 33.0 | 53.0 | 17.5 | 33.5 | 53.3 | 18.0 | 34.0 | 53.6 |
| 17.0 | 33.5 | 54.4 | 17.5 | 34.0 | 54.7 | 18.0 | 34.5 | 54.9 |
| 17.0 | 34.0 | 55.8 | 17.5 | 34.5 | 56.1 | 18.0 | 35.0 | 56.3 |
| 17.0 | 34.5 | 57.2 | 17.5 | 35.0 | 57.5 | 18.0 | 35.5 | 57.7 |
| 17.0 | 35.0 | 58.7 | 17.5 | 35.5 | 58.9 | 18.0 | 36.0 | 59.1 |
| 17.0 | 35.5 | 60.1 | 17.5 | 36.0 | 60.3 | 18.0 | 36.5 | 60.5 |
| 17.0 | 36.0 | 61.6 | 17.5 | 36.5 | 61.8 | 18.0 | 37.0 | 62.0 |
| 17.0 | 36.5 | 63.0 | 17.5 | 37.0 | 63.2 | 18.0 | 37.5 | 63.4 |
| | | | | | | | | |

# DETERMINING THE VALUE OF d(3)

| (d1) | (d2) | d(3) | (d1) | (d2) | d(3) | (d1) | (d2) | d(3) |
|---|---|---|---|---|---|---|---|---|
| 500uR/hr | 20 uR/hr | 2uR/hr | 500uR/hr | 20 uR/hr | 2uR/hr | 500uR/hr | 20 uR/hr | 2uR/hr |
| 18.5 | 19.0 | 19.4 | 19.0 | 19.5 | 19.9 | 19.5 | 20.0 | 20.4 |
| 18.5 | 19.5 | 20.2 | 19.0 | 20.0 | 20.7 | 19.5 | 20.5 | 21.2 |
| 18.5 | 20.0 | 21.1 | 19.0 | 20.5 | 21.6 | 19.5 | 21.0 | 22.1 |
| 18.5 | 20.5 | 22.1 | 19.0 | 21.0 | 22.6 | 19.5 | 21.5 | 23.1 |
| 18.5 | 21.0 | 23.0 | 19.0 | 21.5 | 23.5 | 19.5 | 22.0 | 24.0 |
| 18.5 | 21.5 | 23.9 | 19.0 | 22.0 | 24.4 | 19.5 | 22.5 | 24.9 |
| 18.5 | 22.0 | 24.9 | 19.0 | 22.5 | 25.4 | 19.5 | 23.0 | 25.9 |
| 18.5 | 22.5 | 25.9 | 19.0 | 23.0 | 26.4 | 19.5 | 23.5 | 26.9 |
| 18.5 | 23.0 | 26.9 | 19.0 | 23.5 | 27.4 | 19.5 | 24.0 | 27.8 |
| 18.5 | 23.5 | 27.9 | 19.0 | 24.0 | 28.4 | 19.5 | 24.5 | 28.8 |
| 18.5 | 24.0 | 28.9 | 19.0 | 24.5 | 29.4 | 19.5 | 25.0 | 29.9 |
| 18.5 | 24.5 | 30.0 | 19.0 | 25.0 | 30.4 | 19.5 | 25.5 | 30.9 |
| 18.5 | 25.0 | 31.0 | 19.0 | 25.5 | 31.5 | 19.5 | 26.0 | 31.9 |
| 18.5 | 25.5 | 32.1 | 19.0 | 26.0 | 32.5 | 19.5 | 26.5 | 33.0 |
| 18.5 | 26.0 | 33.2 | 19.0 | 26.5 | 33.6 | 19.5 | 27.0 | 34.1 |
| 18.5 | 26.5 | 34.3 | 19.0 | 27.0 | 34.7 | 19.5 | 27.5 | 35.2 |
| 18.5 | 27.0 | 35.4 | 19.0 | 27.5 | 35.8 | 19.5 | 28.0 | 36.3 |
| 18.5 | 27.5 | 36.5 | 19.0 | 28.0 | 37.0 | 19.5 | 28.5 | 37.4 |
| 18.5 | 28.0 | 37.7 | 19.0 | 28.5 | 38.1 | 19.5 | 29.0 | 38.5 |
| 18.5 | 28.5 | 38.8 | 19.0 | 29.0 | 39.2 | 19.5 | 29.5 | 39.7 |
| 18.5 | 29.0 | 40.0 | 19.0 | 29.5 | 40.4 | 19.5 | 30.0 | 40.8 |
| 18.5 | 29.5 | 41.2 | 19.0 | 30.0 | 41.6 | 19.5 | 30.5 | 42.0 |
| 18.5 | 30.0 | 42.4 | 19.0 | 30.5 | 42.8 | 19.5 | 31.0 | 43.2 |
| 18.5 | 30.5 | 43.6 | 19.0 | 31.0 | 44.0 | 19.5 | 31.5 | 44.4 |
| 18.5 | 31.0 | 44.8 | 19.0 | 31.5 | 45.2 | 19.5 | 32.0 | 45.6 |
| 18.5 | 31.5 | 46.1 | 19.0 | 32.0 | 46.5 | 19.5 | 32.5 | 46.8 |
| 18.5 | 32.0 | 47.4 | 19.0 | 32.5 | 47.7 | 19.5 | 33.0 | 48.1 |
| 18.5 | 32.5 | 48.6 | 19.0 | 33.0 | 49.0 | 19.5 | 33.5 | 49.3 |
| 18.5 | 33.0 | 49.9 | 19.0 | 33.5 | 50.3 | 19.5 | 34.0 | 50.6 |
| 18.5 | 33.5 | 51.2 | 19.0 | 34.0 | 51.6 | 19.5 | 34.5 | 51.9 |
| 18.5 | 34.0 | 52.5 | 19.0 | 34.5 | 52.9 | 19.5 | 35.0 | 53.2 |
| 18.5 | 34.5 | 53.9 | 19.0 | 35.0 | 54.2 | 19.5 | 35.5 | 54.5 |
| 18.5 | 35.0 | 55.2 | 19.0 | 35.5 | 55.5 | 19.5 | 36.0 | 55.8 |
| 18.5 | 35.5 | 56.6 | 19.0 | 36.0 | 56.9 | 19.5 | 36.5 | 57.2 |
| 18.5 | 36.0 | 58.0 | 19.0 | 36.5 | 58.2 | 19.5 | 37.0 | 58.5 |
| 18.5 | 36.5 | 59.3 | 19.0 | 37.0 | 59.6 | 19.5 | 37.5 | 59.9 |
| 18.5 | 37.0 | 60.7 | 19.0 | 37.5 | 61.0 | 19.5 | 38.0 | 61.2 |
| 18.5 | 37.5 | 62.2 | 19.0 | 38.0 | 62.4 | 19.5 | 38.5 | 62.6 |
| 18.5 | 38.0 | 63.6 | 19.0 | 38.5 | 63.8 | 19.5 | 39.0 | 64.0 |
| | | | | | | | | |

# DETERMINING THE VALUE OF d(3)

| (d1) | (d2) | d(3) | (d1) | (d2) | d(3) | (d1) | (d2) | d(3) |
|---|---|---|---|---|---|---|---|---|
| 500uR/hr | 20 uR/hr | 2uR/hr | 500uR/hr | 20 uR/hr | 2uR/hr | 500uR/hr | 20 uR/hr | 2uR/hr |
| 20.0 | 20.5 | 20.9 | 20.5 | 21.0 | 21.4 | 21.0 | 21.5 | 21.9 |
| 20.0 | 21.0 | 21.7 | 20.5 | 21.5 | 22.2 | 21.0 | 22.0 | 22.7 |
| 20.0 | 21.5 | 22.6 | 20.5 | 22.0 | 23.1 | 21.0 | 22.5 | 23.6 |
| 20.0 | 22.0 | 23.6 | 20.5 | 22.5 | 24.0 | 21.0 | 23.0 | 24.5 |
| 20.0 | 22.5 | 24.5 | 20.5 | 23.0 | 25.0 | 21.0 | 23.5 | 25.5 |
| 20.0 | 23.0 | 25.4 | 20.5 | 23.5 | 25.9 | 21.0 | 24.0 | 26.4 |
| 20.0 | 23.5 | 26.4 | 20.5 | 24.0 | 26.9 | 21.0 | 24.5 | 27.4 |
| 20.0 | 24.0 | 27.3 | 20.5 | 24.5 | 27.8 | 21.0 | 25.0 | 28.3 |
| 20.0 | 24.5 | 28.3 | 20.5 | 25.0 | 28.8 | 21.0 | 25.5 | 29.3 |
| 20.0 | 25.0 | 29.3 | 20.5 | 25.5 | 29.8 | 21.0 | 26.0 | 30.3 |
| 20.0 | 25.5 | 30.3 | 20.5 | 26.0 | 30.8 | 21.0 | 26.5 | 31.3 |
| 20.0 | 26.0 | 31.4 | 20.5 | 26.5 | 31.8 | 21.0 | 27.0 | 32.3 |
| 20.0 | 26.5 | 32.4 | 20.5 | 27.0 | 32.9 | 21.0 | 27.5 | 33.4 |
| 20.0 | 27.0 | 33.5 | 20.5 | 27.5 | 33.9 | 21.0 | 28.0 | 34.4 |
| 20.0 | 27.5 | 34.5 | 20.5 | 28.0 | 35.0 | 21.0 | 28.5 | 35.5 |
| 20.0 | 28.0 | 35.6 | 20.5 | 28.5 | 36.1 | 21.0 | 29.0 | 36.5 |
| 20.0 | 28.5 | 36.7 | 20.5 | 29.0 | 37.2 | 21.0 | 29.5 | 37.6 |
| 20.0 | 29.0 | 37.8 | 20.5 | 29.5 | 38.3 | 21.0 | 30.0 | 38.7 |
| 20.0 | 29.5 | 39.0 | 20.5 | 30.0 | 39.4 | 21.0 | 30.5 | 39.8 |
| 20.0 | 30.0 | 40.1 | 20.5 | 30.5 | 40.5 | 21.0 | 31.0 | 41.0 |
| 20.0 | 30.5 | 41.2 | 20.5 | 31.0 | 41.7 | 21.0 | 31.5 | 42.1 |
| 20.0 | 31.0 | 42.4 | 20.5 | 31.5 | 42.8 | 21.0 | 32.0 | 43.3 |
| 20.0 | 31.5 | 43.6 | 20.5 | 32.0 | 44.0 | 21.0 | 32.5 | 44.4 |
| 20.0 | 32.0 | 44.8 | 20.5 | 32.5 | 45.2 | 21.0 | 33.0 | 45.6 |
| 20.0 | 32.5 | 46.0 | 20.5 | 33.0 | 46.4 | 21.0 | 33.5 | 46.8 |
| 20.0 | 33.0 | 47.2 | 20.5 | 33.5 | 47.6 | 21.0 | 34.0 | 48.0 |
| 20.0 | 33.5 | 48.4 | 20.5 | 34.0 | 48.8 | 21.0 | 34.5 | 49.2 |
| 20.0 | 34.0 | 49.7 | 20.5 | 34.5 | 50.1 | 21.0 | 35.0 | 50.4 |
| 20.0 | 34.5 | 51.0 | 20.5 | 35.0 | 51.3 | 21.0 | 35.5 | 51.7 |
| 20.0 | 35.0 | 52.2 | 20.5 | 35.5 | 52.6 | 21.0 | 36.0 | 52.9 |
| 20.0 | 35.5 | 53.5 | 20.5 | 36.0 | 53.9 | 21.0 | 36.5 | 54.2 |
| 20.0 | 36.0 | 54.8 | 20.5 | 36.5 | 55.1 | 21.0 | 37.0 | 55.5 |
| 20.0 | 36.5 | 56.1 | 20.5 | 37.0 | 56.4 | 21.0 | 37.5 | 56.8 |
| 20.0 | 37.0 | 57.5 | 20.5 | 37.5 | 57.8 | 21.0 | 38.0 | 58.1 |
| 20.0 | 37.5 | 58.8 | 20.5 | 38.0 | 59.1 | 21.0 | 38.5 | 59.4 |
| 20.0 | 38.0 | 60.1 | 20.5 | 38.5 | 60.4 | 21.0 | 39.0 | 60.7 |
| 20.0 | 38.5 | 61.5 | 20.5 | 39.0 | 61.8 | 21.0 | 39.5 | 62.1 |
| 20.0 | 39.0 | 62.9 | 20.5 | 39.5 | 63.1 | 21.0 | 40.0 | 63.4 |
| 20.0 | 39.5 | 64.3 | 20.5 | 40.0 | 64.5 | 21.0 | 40.5 | 64.8 |
| | | | | | | | | |

Attachment 8.5
Page 11 of 11

# ISOPLETH SURVEY LOG

Page _ of _

| LOCATION (Grid coordinates/Landmarks) | | TIME 24 hr. clock | LAT/LONG | | μR/hr @ 1 meter | REMARKS Indicate environmental, special conditions, or other pertinent data |
|---|---|---|---|---|---|---|
| Field Team Number | Location | | | | | |
| | | | | | | |
| | | | | | | |
| | | | | | | |
| | | | | | | |
| | | | | | | |
| | | | | | | |
| | | | | | | |
| | | | | | | |
| | | | | | | |
| | | | | | | |
| | | | | | | |
| | | | | | | |
| | | | | | | |
| | | | | | | |
| | | | | | | |
| | | | | | | |
| | | | | | | |

Field Team Dispatcher Date_____

## FOOD CONTROL AREA
## PROTECTIVE ACTION RECOMMENDATION

☐ Washington ☐ Oregon

☐ Establish or reduce the Food Control Area boundary in accordance with the attached map.

☐ Establish or modify food control points around the Food Control Area.

☐ Restrict Agricultural products from leaving the food control boundary until they are sampled and determined to be below protective action guidelines.

☐ Advise farms and dairies to place or maintain all milk producing animals and livestock on stored feed and covered water.

☐ Advise residents within the food control boundary to:

☐ 1. Drink only bottled water or water from covered sources.

☐ 2. Not consume milk or produce from their family farm or garden until monitoring can be done.

☐ Rescind the Food Control PAR.

Other:

_____

_____

_____

_____

Approved by: PADG Chairperson/Dose Assessment Coordinator _____

Concurred by: WA State Health Liaison _____

Concurred by: OR Senior State Official _____
(only if Oregon box above is checked)

Attachment 8.7

## REOPENING OF THE TRANSPORTATION CORRIDOR RECOMMENDATION

Date _____ Time _____

The following modifications to the existing Transportation Corridor PAR are recommended to the State of Washington:

Airspace

☐ Reopen all airspace to unrestricted use, if applicable. Confer with the REM for this information, as needed.

Columbia River

☐ Reopen the Columbia River to unrestricted use.

☐ Reopen the Columbia River to restricted use, as follows:

☐ Commercial or private boats moored within the relocation zone are surveyed prior to leaving and any contamination found is less than 1,000 dpm/100cm$^2$, if applicable.

☐ Commercial ships and private boats are advised to navigate the river through the relocation area without docking or disembarking.

☐ Other:_____

_____

_____

_____

Highways

☐ Reopen the following highways to unrestricted use:

☐ Reopen the following highways to restricted use:_____

_____

_____

_____

☐ Barricade and post all exits within the relocation area to prohibit stopping or exiting to secondary roads.

Approved by: PADG Chairperson/Dose Assessment Coordinator _____

Concurred by: WA State Health Liaison _____

Attachment 8.8

# INTERIM SAMPLING PLAN

Date: Time: Date Time

| Field Team Name | GENERAL LOCATION:<br><br>Grid Coordinates<br>geographical landmarks<br>Latitude & Longitude | Sampling Instructions<br><br>General: General Area dose rates, general deposition readings, deposition in soil, deposition on pasture grass, re-suspension, hot spots and other areas of concern. |
|---|---|---|
| | | |
| | | |
| | | |
| | | |
| | | |
| | | |
| | | |

Dispatched:_____ _____/_____

Field Team Coordinator Date / Time

Attachment 8.9

Revision #:_____

# DETAILED SAMPLING PLAN

Date: Time: Page of

| Field Team Name | SPECIFIC LOCATION: (Street Address, Grid Coordinates, landmarks, Latitude & Longitude) | Sample Types | | | | | | Priority |
|---|---|---|---|---|---|---|---|---|
| | | Grass | Soil | Water | Milk | Air | Other | |
| | | | | | | | | |
| | | | | | | | | |
| | | | | | | | | |
| | | | | | | | | |
| | | | | | | | | |
| | | | | | | | | |
| | | | | | | | | |

Approved:_____
PADG Chairperson

Dispatched:_____ _____/_____
Field Team Coordinator Date / Time

Concurred by:_____
WA State Health Liaison

Concurred by:_____
OR Senior State Official (If Oregon locations included.)

Attachment 8.10

# SAMPLE DATA AN JALYSIS SUMMARY

DATE:

Page ___ of ___

| Map "disk # | Sample ID # | Field Team Name | LOCATION: Grid/landmarks Latitude & Longitude | Sample Types | | | | | TIME (Military) Sample Collected | General Area γ Dose Rate (μR/hr) | β,γ Ground Deposition (cpm) (optional) | Ingestion Dose Analysis Limiting DIL Ratio | | Relocation Dose Analysis "Groundshine" (REM) | | |
|---|---|---|---|---|---|---|---|---|---|---|---|---|---|---|---|---|
| | | | | Grass | Soil | Water | Milk | Other | | | | Nuclide | DIL Ratio | 1st yr | 2nd yr | 50 yrs |
| | | | | | | | | | | | | | | | | |
| | | | | | | | | | | | | | | | | |
| | | | | | | | | | | | | | | | | |
| | | | | | | | | | | | | | | | | |
| | | | | | | | | | | | | | | | | |
| | | | | | | | | | | | | | | | | |

* EOF use only

SDAS.FORM(6/94)

# UPDATE BRIEFING GUIDE

## A. FREQUENCY

If at all possible, the briefings should be conducted at least every 30 minutes, especially during the most active stages of the event. Then regular briefing intervals should be established and announced.

## B. ATTENDANCE

The MUDAC staff members listed below should be requested to provide a short status report on their activities or pertinent events in their areas of responsibility, as applicable.

## C. ATTENDEES

- Energy Northwest PADG Representative
- Dept of Energy PADG Representative
- Oregon PADG Representative
- Dose Projection Health Physicist
- Field Team Coordinator

## HOT SPOT MANAGEMENT AND CONTROL

If after defining the Relocation Area (RA) boundary and/or the Food Control Area (FCA) boundary, radioactively contaminated areas meeting the definition in 4.9 of this document will be controlled as RA or FCA hot spots. Modification of the 500 microR/hr or 2 microR/hr isopleth boundaries to incorporate hot spots is the preferred control method. Controlled areas do not have to be gaussian footprints and should evolve and be modified in a strictly empirical manner by grid surveys/samples.

During the Intermediate Phase, the normal field team survey procedure is to monitor readings continuously, at no less than one-half mile increments.

It is recommended that location of all hot spots be completed before beginning individual hot spot area reductions.

For each hot spot, overlay a one mile grid centered on the hot spot:

a. Transfer a 16 by 16 grid (for each square mile) to an appropriate scale map
b. Have the field teams post the area for RA or FCA, as appropriate.
c. Posting density and control should be determined by ease of access by the public.
d. Develop a field control system to manage the elimination of clean areas of approximately 100 meters square by detailed survey.
e. Concentrate hot spot reduction priorities to developed or easily accessible areas. Consider transportation corridors a high priority.

For each hot spot, develop short and long term recommendations for return to use:

a. Perform a detailed sample analysis of each hot spot.
b. Consider whether removal, decay in place, or burial is recommended for the area

For hot spots less than one mile apart, develop the grid pattern to avoid duplicate surveys to eliminate clean areas.

ENERGY NORTHWEST

COLUMBIA GENERATING STATION
PLANT PROCEDURES MANUAL

| PROCEDURE NUMBER | APPROVED BY | DATE |
|---|---|---|
| *13.11.1 | DWC - Revision 23 | 09/06/00 |

VOLUME NAME
EMERGENCY PLAN IMPLEMENTING PROCEDURES

SECTION
EMERGENCY OPERATIONS FACILITIES

TITLE
EOF MANAGER DUTIES

## TABLE OF CONTENTS


Page

1.0 PURPOSE . . . . . 2

2.0 REFERENCES . . . . . 2

3.0 DISCUSSION . . . . . 3

4.0 PROCEDURE . . . . . 3

4.1 EOF Manager Duties At Unusual Event Classification . . . . . 3
4.2 EOF Manager Duties For Alert Or Higher Emergency Classifications . . . . . 3
4.3 Transfer Of Emergency Director Duties . . . . . 8
4.4 Actions As Emergency Director . . . . . 9

5.0 ATTACHMENTS . . . . . 11

5.1 NRC Response Team Briefing Guidelines . . . . . 12
5.2 EOF Manager Checklist . . . . . 15
5.3 EOF Manager Secretary Duties . . . . . 21

## 1.0 PURPOSE

This procedure describes the emergency responsibilities and duties of the Emergency Operations Facility (EOF) Manager. {R-5695, R-5708}

## 2.0 REFERENCES

2.1 GO2-83-529, Backup Emergency Operations Facilities (EOF) {2.1}

2.2 10CFR50 Appendix E (IV)(A) {R-5695, R-5708}

2.3 10CFR50.47 (b)(3) {R-1584}

2.4 FSAR, Chapter 13.3, Emergency Plan, Section 2 & 6

2.5 WNP-2 Safeguards Contingency Plan

2.6 PPM 1.3.1, WNP-2 Operating Policies, Programs and Practices

2.7 PPM 1.9.14, Onsite Medical Emergencies

2.8 PPM 5.7.1, Severe Accident Guidelines

2.9 PPM 13.1.1, Classifying the Emergency

2.10 PPM 13.2.1, Emergency Exposure Levels/Protective Action Guides

2.11 PPM 13.2.2, Determining Protective Action Recommendations

2.12 PPM 13.4.1, Emergency Notifications

2.13 PPM 13.5.3, Evacuation of Exclusion Area and/or Nearby Facilities

2.14 PPM 13.13.2, Emergency Event Termination and Recovery Operations

2.15 PPM 13.13.3, Intermediate Phase MUDAC Operations

2.16 PPM 13.13.4, After Action Reporting

2.17 Classification Notification Form, 968-24075.

2.18 Emergency Director Turnover Sheet, 968-25810.

2.19 Emergency Response Log, 968-23895.

2.20 Emergency Operations Facility Briefing Guidelines, 968-26028.

2.21 Follow-up Offsite Notifications, 968-26098

## 3.0 DISCUSSION

3.1 The Emergency Director is the Energy Northwest individual on shift at all times who has the authority and responsibility to immediately and unilaterally initiate any emergency actions.

3.2 The Shift Manager normally acts as the Emergency Director when an emergency classification is initially declared. Emergency Director responsibilities will transfer from the Shift Manager to the TSC Manager or the EOF Manager depending upon time of facility activation.

3.3 The EOF Manager is responsible for the overall management of Energy Northwest resources and will be in charge of Energy Northwest emergency and recovery operations.

3.4 The EOF Manager must authorize requests for outside assistance, including resources available from the federal government.

3.5 Severe Accident Guidelines (SAGs) are entered and Emergency Operating Procedures (EOPs) are exited when primary containment flooding is required. The TSC Manager is responsible to communicate this to the EOF Manager or Assistant EOF Manager when this occurs.

3.6 The Emergency Director approves mitigating actions identified as requiring Emergency Director concurrence on SAGs or EOPs prior to implementation, using the Emergency Director ringdown phone, or other means if this method is not available.

## 4.0 PROCEDURE

NOTE: Procedural steps may be implemented using Attachment 5.2, EOF Manager Checklist.

### 4.1 EOF Manager Duties At Unusual Event Classification

4.1.1 No action is required unless you are contacted by the Shift Manager or Emergency Director.

### 4.2 EOF Manager Duties For Alert Or Higher Emergency Classifications

NOTE: If you are unable to respond to the EOF, respond to the Alternate EOF located at the Richland Office Complex.

4.2.1 Respond to the Emergency Operations Facility (EOF). Then,

- Sign in on the staffing board
- Obtain the EOF Manager basket and other equipment
- Start an Emergency Response Log

4.2.2 Contact the Emergency Director for a briefing on the status of the emergency and offsite notifications.

4.2.3 Contact the JIC Manager to provide status information for the follow-up news releases.

4.2.4 Verify responding EOF staff promptly set up the EOF and obtain assistance, if necessary, to resolve any activation problems.

NOTE: Failure to staff the required positions within one hour of classification is a violation of the Emergency Plan response requirements.

4.2.5 Ensure required EOF positions are being filled as specified:

- Radiological Emergency Manager
- Environmental Field Team Members (6)
- Field Team Coordinator
- Dose Projection Health Physicist
- Telecommunications Manager

OR

Use judgment in determining when qualified personnel will perform a task to fulfill EOF responsibilities even though the personnel may not be identified as normally assigned to the task.

NOTE: The EOF may be activated without all required positions filled.

4.2.6 Declare the EOF activated when the following main responsibilities of the EOF can be assumed.

EOF Main Responsibilities

- Manage the overall Energy Northwest emergency effort.
- Evaluate the magnitude and consequences of actual or potential radiological releases.
- Coordinate emergency response activities with local, state and federal agencies.

- Provide offsite protective action recommendations.

4.2.7 When the EOF is activated, then:

- Direct the EOF Information Coordinator to anounce center activation to other emergency centers
- Direct the TSC Manager to have the Plant/NRC Liaison to report activation to NRC.
- Conduct an initial briefing, including:
  - Current emergency classification, cause of event and corrective actions being taken or in progress
  - Current plant status
  - Onsite personnel status of injuries, contaminations, exposures, etc.
  - Whether the event involves radioactive releases
  - Status of notifications to offsite agencies
  - Status of offsite emergency response activities in progress or planned and PARs if issued

4.2.8 Assume the Emergency Director duties per Section 4.6. Then:

- Initiate a Crash call per Section 4.6.
- Inform the SCC that the EOF Manager has assumed responsibility for Crash notifications.

4.2.9 Evaluate staff recommendations on assistance from outside agencies and direct the Site Support Manager to coordinate this response.

4.2.10 Conduct periodic briefings:

- If an NRC site response team is enroute, ensure a briefing in accordance with Attachment 5.1 is prepared. {R-1584}
- Conduct briefings for EOF staff approximately every 30 minutes using EOF Briefing Guidelines, form 968-26028.
- Brief the Chief Executive Officer/Representative as developments occur using form 968-26028.

4.2.11 Ensure EOF staff are assessing plant conditions and conferring collectively to provide you with accident mitigation conclusions/recommendations to determine decisions on:

- Changes to Emergency Classification or PARs
- Prioritizing tasks that need to be pursued
- Radiological or other hazards that impact offsite emergency workers
- The need to request augmenting staff or offsite assistance
- Protective actions for plant/offsite personnel

4.2.12 Refer calls from the news media to the JIC.

NOTE: A radioactive release is defined if any of the following are met:

- A valid reading exists which exceeds any PPM 13.1.1 Table 3 Column UE value, OR
- Offsite dose calculations meet or exceed PPM 13.1.1 Table 4 UE levels for TEDE or CDE thyroid, OR
- Field teams measure 100 $\mu$R or more at 1.2 miles from the plant.

4.2.13 When it is determined that a radioactive release is in progress, perform the following:

- Complete an informational CNF;
- Initiate a Crash call;
- Direct the Information Coordinator to notify all emergency centers.

4.2.14 If elevated radiological conditions exist within the EOF or outside the PSF/EOF:

EOF general area radiation levels exceed 5 mrem/hr

EOF unidentified airborne radioactivity exceeds 0.3 DAC (0.3 DAC equates to approximately 750 ccpm on a 40 $ft^3$ air sample in the field):

Then:

- Immediately notify the EOF staff of the condition
- Direct surveillance of airborne activity be increased to once per hour and results reported to you
- Direct dose rates in the area be determined approximately every 15 minutes and results reported to you

- Direct that projected accumulated doses for the EOF personnel be evaluated and appropriate stay times be established

- Prohibit eating or drinking in the EOF until advised of resolution of the EOF airborne activity problem.

4.2.15 If airborne activity levels outside the PSF/EOF could exceed 50 mR/hr, direct the Radiological Emergency Manager to monitor the intake and return air monitors and to ensure that PSF/EOF ventilation is in the correct operating mode.

4.2.16 If the emergency worker dose limit is projected to exceed 5 REM over the course of the event for EOF staff, confer with EOF staff and determine if selected staff will be directed to continue emergency duties from the TSC or the alternate EOF.

NOTE: The alternate EOF meets the functions of establishing required communications between the primary EOF and the TSC. It also serves as an assembly area for EOF responders unable to respond to the primary EOF due to hazards that prevent access to the primary facility from off site. {2.1}

4.2.17 If near site conditions present sufficient hazards to EOF responders that have not yet arrived at the primary EOF, direct Security road blocks to redirect EOF responders to the alternate EOF, located near the Joint Information Center at the Richland Office Complex. {2.1}

4.2.18 Ensure that mitigating action concurrence is obtained prior to implementing actions that require Emergency Director concurrence on EOPs or SAGs.

4.2.19 Terminate the event and initiate recovery operations via PPM 13.13.2 when appropriate.

4.2.20 Initiate ingestion zone operations per PPM 13.13.3 when appropriate. Coordinate the implementation through the Washington State Emergency Operations Center.

4.2.21 Determine staffing levels for the EOF and the JIC when the emergency is downgraded or terminated using PPM 13.13.2 guidelines.

4.2.22 At shift change or termination of emergency:

- Brief your relief on the current status of the plant and emergency activities.

- Prepare an individual After-Action Report. Refer to PPM 13.13.4.

- At event termination, direct an after action critique of EOF performance to summarize actions taken and identify corrective actions needed.

- Deliver EOF After-Action Reports and summary to the Final After Action Committee or to the Emergency Preparedness Department.

- If an Alert or higher classification was declared, delegate a chairperson and establish a Final After Action Report Committee in accordance with PPM 13.13.4. If the emergency classification was Unusual Event, Emergency Preparedness will compile the report.

4.3 Specific Actions to Take at Site Area Emergency:

- Ensure notifications are completed to State, County, and DOE within 15 minutes.

- Evacuate the Protected Area per PPM 13.5.1.

- Ensure dose assessment is in progress if a release is in progress or containment leakage is suspected.

- Ensure Security has established road blocks on plant access roads.

- Consider an Exclusion Area evacuation per PPM 13.5.3.

- Direct the TSC to make the appropriate PA announcements.

4.4 Specific Actions to Take at General Emergency:

- Ensure notifications are completed to State, County, and DOE within 15 minutes.

- Ensure the Protected Area is evacuated if not completed at Site Area Emergency per PPM 13.5.1.

- Ensure the Exclusion Area is evacuated per PPM 13.5.3.

- Direct the TSC to make the appropriate PA announcements.

- Ensure dose projections are updated.

- Ensure roadblocks are established and properly located to avoid the plume.

- Evaluate protective actions for emergency workers.

- Consult with the REM to determine wind direction and EOF habitability considerations.

- Review the PARs in PPM 13.2.2 to ensure that the PARs declared reflect current Plant or radiological conditions.

- Determine if additional PARs are required per PPM 13.2.2.

4.5 Specific Actions for the Ingestion Phase:

- Initiate ingestion zone operations via PPM 13.13.3 when appropriate. Coordinate with Washington State EOC.

- Determine staffing levels for the EOF and JIC when the emergency is downgraded or terminated using PPM 13.13.2.

4.6 Transfer Of Emergency Director Duties

1. If assuming the Emergency Director (ED) duties:

   a. Contact current ED and determine a time when conditions would permit turnover process.

   b. At a time when conditions permit, conduct a turnover using the Classification Notification Form or Emergency Director Turnover Sheet as a guide.

   c. Once current conditions and proposed actions are fully understood, relieve current ED of duties.

   d. Announce transfer of authority to facility staff and ensure other Energy Northwest emergency facilities are notified.

   e. Complete a Crash call to offsite agencies, i.e., state, county, and DOE of the transfer. The Plant/NRC Liaison in the TSC should be directed to notify the NRC on the ENS line.

   f. Log the transfer in the facility log.

   g. As ED, follow guidance in Section 4.7.

2. If transferring the ED duties:

   a. When contacted by an oncoming ED, give a time when conditions would permit the turnover process.

   b. At the time when conditions permit, contact oncoming ED and conduct a turnover using the Classification Notification Form or the Emergency Director Turnover Sheet as a guide.

   c. Once the oncoming ED fully understands current conditions and proposed actions, transfer ED duties.

   d. Announce the transfer to the facility staff.

   e. Log the transfer in the facility log.

4.7 Actions As Emergency Director

4.7.1 Assume the following responsibilities:

NOTE: The EOF Manager must authorize requests for outside assistance, including resources available from the federal government.

NOTE: Items a through e may not be delegated.

- Classification of emergencies in accordance with PPM 13.1.1, Classifying The Emergency, and periodically reviewing the classification to ensure that it reflects current plant conditions.

- Making protective action recommendations in accordance with PPM 13.2.2 to offsite authorities responsible for implementing emergency measures for the public.

- Approving official notifications/communications (e.g., Crash calls) to local, state, and Federal agencies.

- Authorizing recovery actions not specifically authorized by procedure which have a potential for radioactive release to the environment.

- Requesting assistance from offsite organizations and agencies as needed.

- Making followup notifications to offsite agencies per PPM 13.4.1. Refer to Follow-up Offsite Notifications, 968-26098.

- Approving the technical content of press releases.

- Ensuring, through the facility managers, that the appropriate emergency procedures are implemented.

- Ensuring the requisite emergency response facilities are activated and properly staffed.

- If advised of a personnel injury or death, then:

    1. Ensure that transportation to a medical facility is being arranged and next-of-kin notifications occur using guidance found in PPM 1.9.14.

2. Ensure details of the incident, e.g., individuals name, type of injury, duties when injury occurred, etc., are forwarded to the Joint Information Center.

- Authorizing venting of the primary containment when in SAGs.

NOTE: The Shift Manager as Emergency Director may terminate an Unusual Event. Due to the commitment of onsite and offsite manpower and resources, only the EOF Manager as the Emergency Director may terminate an event classified as Alert or greater.

- Terminating the emergency and entering the recovery phase in accordance with PPM 13.13.2.

4.7.2 If response to the event requires departure from Technical Specifications or license conditions, refer to PPM 1.3.1 to invoke 10CFR 50.54(x) actions.

4.7.3 Approximately every 30 minutes, or when conditions change, perform the following:

a. Review the emergency action levels (EALs) in procedure PPM 13.1.1 to ensure the emergency classification declared reflects current Plant conditions.

b. Review the protective action recommendations (PARs) in procedure PPM 13.2.2 to ensure the PARs declared reflect current Plant or radiological release conditions.

c. Review the status of onsite protective actions and whether actions should be modified based on the current Plant conditions.

d. Conduct briefings using EOF Briefing Guidelines (968-26028).

4.7.4 When conditions warrant a change in emergency classification or protective action recommendations, then perform the following:

a. Complete a Classification Notification Form (CNF).

NOTE: Notifications to the state, counties and DOE (Hanford) are required within 15 minutes of time noted on the Classification Notification Form.

b. Initiate a Crash call to provide notification per PPM 13.4.1, using the completed CNF as a basis.

- If the Crash phone is out of service, the primary back up is the dial up system. To ensure completing notification within 15 minutes, contact the Benton and Franklin EOCs and the Washington State EOC prior to other notifications.

c. Direct the Information Coordinator to inform the other Energy Northwest emergency facilities of the change in emergency classification and/or protective actions and ensure a copy of the CNF is sent to the appropriate organizations.

4.7.5 Determine if Protected Area evacuation actions need to be taken in accordance with the following:

- Alert - Evacuation is optional, depending on event prognosis. Consider evacuating plant personnel who are not part of the ERO.

- Site Area Emergency or General Emergency - Protected Area evacuation is required for most situations per PPM 13.5.1 for personnel who are not part of the ERO.

4.7.6 Consider exclusion area evacuation in accordance with PPM 13.5.3 when a Site Area Emergency is declared and order an exclusion area evacuation when a General Emergency is declared.

4.7.7 Authorize increases to emergency worker radiation exposure limits when recommended by the Radiation Protection Manager or Radiological Emergency Manager in accordance with PPM 13.2.1.

4.7.8 Authorize personnel to take potassium iodide (KI) when recommended by the Radiation Protection Manager or Radiological Emergency Manager in accordance with PPM 13.2.1.

## 5.0 ATTACHMENTS

5.1 NRC Response Team Briefing Guidelines

5.2 EOF Manager Checklist

5.3 EOF Manager Secretary Duties

# NRC RESPONSE TEAM BRIEFING GUIDELINES

1. Date and time of this status briefing: Date Time

2. Current Classification (Check): _____ UE_____ Alert_____ SAE_____ GE

   Declared at: Date Time

3. Reason for classification (include failed systems/components):

   Previous classification history:

   a. Classification declared at for the following reason:

   b. Classification declared at for the following reason:

   c. Classification declared at for the following reason:

4. Offsite PARs and implementation status for current classification:

5. Affected plant parameters (attach copy of most recent Plant Status Board display):

| | | | |
|---|---|---|---|
| Fuel cladding: | Intact | Challenged | Failed |
| RCS boundary: | Intact | Challenged | Failed |
| Containment Integrity: | Intact | Challenged | Failed |

6. Prognosis (check): _____ Stable_____ Improving_____ Degrading_____ N/A

7. Meteorological Data:

a. Wind direction from _____ (Degrees) b. Wind Speed _____ (MPH)

c. Stability class: (circle) A B C D E F G

d. Precipitation (check): ____ None ____ Rain ____ Sleet ____ Snow

8. Offsite radiological conditions (check):

___a. No release is involved.
___b. Release is imminent.
___c. Release is occurring. Release path:
___d. Release started. Time:_____ Est. Duration:
___e. Release occurred previously. Duration:
___f. Release stopped. Time:_____ Date:
___g. Release Inventory Isotopes Release Rate

| | | |
|---|---|---|
| Iodines | | Ci/s |
| Noble gases | | Ci/s |
| Airborne particulates | | Ci/s |
| Liquid | | Ci/s |
| Other | | Ci/s |

9. Current dose projections:

| Plume Centerline | Thyroid Dose Rate (CDE) | TEDE Dose Rate |
|---|---|---|
| Site Boundary (1.2 miles) | mrem/hr | mrem/hr |
| 2 miles | mrem/hr | mrem/hr |
| 5 miles | mrem/hr | mrem/hr |
| 10 miles | mrem/hr | mrem/hr |

10. Onsite protective Actions:

___a. Protected Area Evacuation. Status:
___b. Exclusion Area Evacuation. Status:
___c. KI recommended.
___d. Restricted areas.

11. Offsite agencies responding (check and list):

___a. Local:

___b. State:

___c. Federal:

___d. INPO Mutual Aid:

___e. Contractor/Vendor:

12. Current mitigation activities and their priority:

13. Security information:

14. Other information:

Emergency Center Status:

TSC:
OSC:
EOF:
JIC:

15. Additional Energy Northwest information sources:

| Information | Energy Northwest ERO Position | Location |
|---|---|---|
| Offsite dose projections: | Radiological Emergency Mgr. (REM) | EOF |
| PARs & Field Team status: | REM | EOF |
| EOF habitability: | REM | EOF |
| Core damage assessment: | Engineering Manager | EOF |
| Containment status: | Engineering Manager | EOF |
| Plant equipment problems: | Technical Manager | TSC |
| Repair team status: | Maintenance Manager | TSC |
| Plant operations status: | Operations Manager | TSC |
| Onsite radiological status: | Radiation Protection Mgr. (RPM) | TSC |
| Security status: | Security Manager | EOF |

# EOF MANAGER CHECKLIST

| Response Actions | Time Completed | Initials |
|---|---|---|

4.1 EOF Manager Duties At Unusual Event Classification

1. No action is required unless you are contacted by the Shift Manager or Emergency Director.

4.2 EOF Manager Duties For Alert Or Higher Classifications

NOTE: The numbers in parentheses correspond to the step in the body of this procedure.

| | | | |
|---|---|---|---|
| 1. | Contact JIC Manager and provide update for follow-up news release. (4.2.3) | _____ | _____ |
| 2. | Declare the center activated when minimum staffing positions are present. (4.2.6) | _____ | _____ |
| 3. | Have EOF Information Coordinator announce activation to the other emergency centers. Direct the TSC Manager have the Plant/NRC Liaison report it to NRC. (4.2.7) | _____ | _____ |
| 4. | Conduct initial status briefing and periodic followup briefings approximately every 30 minutes. (4.2.7.c) | _____ | _____ |
| 5. | Assume the Emergency Director (ED) duties per Section 4.6. Ensure that a Crash call to offsite agencies is completed upon transfer of ED duties. (4.2.8.a) | _____ | _____ |
| 6. | Inform the SCC that the EOF has assumed responsibility for Crash notification. (4.2.8.b) | _____ | _____ |
| 7. | If the Radiological Emergency Manager advises you of EOF airborne activity problems, verify the EOF emergency ventilation has been initiated. (Refer to step 4.2.14) | _____ | _____ |
| 8. | If habitability of EOF becomes questionable, confer with EOF staff and determine if selected staff will be directed to continue emergency duties from the TSC or be evacuated offsite. (4.2.14) | _____ | _____ |

| Response Actions | Time Completed | Initials |
|---|---|---|
| 4.3 Specific Actions to Take at Site Area Emergency: (4.3) | | |
| • Ensure notifications are completed to State, County, and DOE within 15 minutes. | _____ | _____ |
| • Evacuate the Protected Area per PPM 13.5.1. | _____ | _____ |
| • Ensure dose assessment is in progress if a release is is in progress or containment leakage is suspected. | _____ | _____ |
| • Ensure Security has established road blocks on plant access roads. | _____ | _____ |
| • Consider an Exclusion Area evacuation per PPM 13.5.3. | _____ | _____ |
| • Direct the TSC to make the appropriate PA announcments. | _____ | _____ |
| 4.4 Specific Actions to Take at General Emergency: (4.4) | | |
| • Ensure notifications are completed to State, County, and DOE within 15 minutes. | _____ | _____ |
| • Ensure the Protected Area is evacuated if not completed at Site Area Emergency per PPM 13.5.1. | _____ | _____ |
| • Ensure the Exclusion Area is evacuated per PPM 13.5.3. | _____ | _____ |
| • Direct the TSC to make the appropriate PA announcements. | _____ | _____ |
| • Ensure dose projections are updated. | _____ | _____ |
| • Ensure roadblocks are established and properly located to avoid the plume. | _____ | _____ |
| • Evaluate protective actions for emergency workers. | _____ | _____ |
| • Consult with the REM to determine wind direction and EOF habitability considerations. | _____ | _____ |
| • Review the PARs in PPM 13.2.2 to ensure that the PARs declared reflect current Plant or radiological conditions. | _____ | _____ |
| • Determine if additional PARs are required per PPM 13.2.2. | _____ | _____ |

| Response Actions | Completed | Initials |
|---|---|---|
| 4.5 Specific Actions for the Ingestion Phase: (4.5) | | |
| • Initiate ingestion zone operations via PPM 13.13.3 when appropriate. Coordinate with Washington State EOC. | _____ | _____ |
| • Determine staffing levels for the EOF and JIC when the emergency is downgraded or terminated using PPM 13.13.2. | _____ | _____ |
| 4.6 Transfer Of Emergency Director Duties (4.6) | | |
| 1. If assuming the Emergency Director (ED) duties: | | |
| a. Contact current ED and determine a time when conditions would permit turnover process. | _____ | _____ |
| b. At a time when conditions permit, conduct a turnover using the Classification Notification Form or Emergency Director Turnover Sheet as a guide. | _____ | _____ |
| c. Once current conditions and proposed actions are fully understood, relieve current ED of duties. | _____ | _____ |
| d. Announce transfer of authority to facility staff and ensure other Energy Northwest emergency facilities are notified. | _____ | _____ |
| e. Complete a Crash call to offsite agencies, i.e., state, county, and DOE of the transfer. The Plant/NRC Liaison in the TSC should be directed to notify the NRC on the ENS line. | _____ | _____ |
| f. Log the transfer in the facility log. | _____ | _____ |
| g. As ED, follow guidance in Section 4.7. | _____ | _____ |
| 2. If transferring the ED duties: | | |
| a. Conduct a turnover using the Classification Notification Form or the Emergency Director Turnover Sheet as a guide. | _____ | _____ |
| b. Transfer ED duties. | _____ | _____ |
| c. Announce the transfer to the facility staff. | _____ | _____ |
| d. Log the transfer in the facility log. | _____ | _____ |

| Response Actions | Completed | Initials |
|---|---|---|

4.7 Actions As Emergency Director (4.7)

Once EPIPs have been entered (emergency classification occurs), recovery actions not specifically authorized by plant procedures which have a potential for radioactive release to the environment require Emergency Director concurrence.

1. Assume the following responsibilities. _____ _____

   NOTE: Items a through e cannot be delegated.
   Items f through g may be delegated if desired.

   a. Classify emergencies per PPM 13.1.1 and periodically review the classification to ensure that it reflects current plant conditions.

   b. Make protective action recommendations per PPM 13.2.2 to offsite authorities responsible for implementing emergency measures for the public.

   c. Approve official notifications/communications to local, state, and Federal agencies.

   d. Authorize recovery actions not specifically authorized by procedures which have a potential for radioactive release to the environment.

   e. Request assistance from offsite organizations and agencies as needed.

   f. Make followup notifications to offsite agencies per PPM 13.4.1. Refer to Follow-up Offsite Notifications, 968-26098.

   g. Approve the technical content of press releases.

   h. Ensure, through facility managers, that appropriate emergency procedures are implemented.

i. Ensure the requisite emergency response facilities are activated and properly staffed.

j. If advised of a personnel injury or death, then:

1) Ensure that transportation to a medical facility is being arranged and next-of-kin notifications occur using guidance found in PPM 1.9.14.

2) Ensure details of the incident, e.g., individuals name, type of injury, duties when injury occurred, etc., are forwarded to the Joint Information Center.

k. Authorizing venting of the primary containment when in SAGs.

l. Terminate the emergency and enter the recovery phase per PPM 13.13.2.

2. Refer to PPM 1.3.1 to invoke 10CFR 50.54(x) actions as necessary. (4.7.2) _____ _____

3. Approximately every 30 minutes, or when conditions change, perform the following: (4.7.3) _____ _____

a. Review the EALs in procedure PPM 13.1.1 to ensure the emergency classification declared reflects current Plant conditions.
b. Review the PARs in procedure PPM 13.2.2 to ensure the PARs declared reflect current Plant or radiological release conditions.
c. Review the status of onsite protective actions and whether actions should be modified based on the current Plant conditions.
d. Conduct briefings using the EOF Briefing Guidelines.

4. When conditions warrant a change in emergency classification or protective action recommendations, perform the following: (4.7.4) _____ _____

a. Complete a Classification Notification Form (CNF).
b. Ensure notifications are performed per PPM 13.4.1 using the completed CNF as a basis.
c. Direct the Information Coordinator to inform the other Energy Norhtwest emergency facilities of the change in emergency classification and/or protective actions.
d. Ensure a copy of the CNF is sent to the appropriate organizations.

5. Determine if Protected Area evacuation actions need to be taken. (4.7.5) _____ _____

   a. Alert - Evacuation is optional, depending on event prognosis. Consider evacuating plant personnel who are not part of the ERO.

   b. Site Area Emergency or General Emergency - Protected Area evacuation is required for most situations per PPM 13.5.1 for personnel who are not part of the ERO.

6. Consider exclusion area evacuation per PPM 13.5.3 when a Site Area Emergency is declared and order an exclusion area evacuation when a General Emergency is declared. (4.7.6) _____ _____

7. Authorize increases to emergency worker radiation exposure limits when recommended by the Radiation Protection Manager or Radiological Emergency Manager per PPM 13.2.1. (4.7.7) _____ _____

8. Authorize personnel to take potassium iodide (KI) when recommended by the Radiation Protection Manager or Radiological Emergency Manager per PPM 13.2.1. (4.7.8) _____ _____

Duties of: EOF Manager Secretary

Assignment Location: Emergency Operations Facility

Report To: EOF Manager

Responsibilities:

1. On arrival at the EOF, sign in on the staffing board, obtain your procedure book from the wall rack and your supply drawer from the EOF supply cabinet.

2. Maintain a log of EOF Manager actions, significant events and activities on an Emergency Response Log, Form 968-23895, with emphasis on:

   a. Receipt of notifications of changes in emergency classification.

   b. The time and content of center briefings.

   c. Significant telephone conversations or Public Address announcements.

   d. Entries requested by EOF decision makers.

   e. Assignment of action items.

3. When directed, initiate Crash Network calls for the EOF Manager (acting as emergency director) by utilizing the Crash Network System Log located in the Emergency Phone Directory to perform the following:

   a. Initiate Crash call by dialing 400.

      1) If there is a failure of the Crash phone, the dial up phone is the primary backup. When making notifications using the dial up, contact Benton and Franklin counties, Washington State and DOE first to ensure that 15 minute time requirement is met.

   b. Perform a roll call of agencies contacted.

      1) When initiating roll call inform responding parties to standby for a call from the Emergency Director.

      2) Following completion of roll call indicate to the Emergency Director that parties are ready for the Crash call.

      3) Note on Crash call log the time of call, message, and parties online.

      4) Inform the EOF Manager of any offsite agency failing to respond to the roll call.

Duties of: EOF Manager Secretary (Contd.)

4. When the EOF Manager (as Emergency Director) completes filling out the Classification Notification Form (CNF):

   a. Make a copy of the original and provide the copy to the Admin support personnel for faxing and internal distribution.

   b. Return the original to the EOF Manager prior to initiating Crash call notification.

5. Answer and monitor the EOF Manager's phones and record messages as necessary.

6. Monitor the EOF Manager's procedure checklist (Attachment 5.2 of this procedure) and remind him of actions required as necessary.

7. Make briefing announcements to EOF staff as directed, similar to, "There will be a briefing in five minutes. Please refer to your briefing guides."

8. Perform other EOF administrative support duties as requested by the EOF Manager.

9. Refer incoming media calls to the Joint Information Center.

10. Upon shift change:

    a. Fully brief your relief on responsibilities, duties and the current status of work being performed.

    b. Forward your log for review by the EOF Manager.

11. Upon shift change or termination of the emergency:

    a. Prepare an individual After Action Report. Refer to PPM 13.13.4.

    b. Provide support to EOF Manager as necessary in collating EOF After Action Reports or logs.

    c. Deliver After Action Reports to the Site Support Manager.

| ENERGY NORTHWEST | | USE CURRENT REVISION |
|---|---|---|
| COLUMBIA GENERATING STATION<br>PLANT PROCEDURES MANUAL | | |
| PROCEDURE NUMBER<br>*13.11.3 | APPROVED BY<br>DWC - Revision 19 | DATE<br>09/06/00 |
| VOLUME NAME<br>EMERGENCY PLAN IMPLEMENTING PROCEDURES | | |
| SECTION<br>EMERGENCY OPERATIONS FACILITY | | |
| TITLE<br>SITE SUPPORT MANAGER AND STAFF DUTIES | | |

TABLE OF CONTENTS


Page

1.0 PURPOSE . . . . . 2

2.0 REFERENCES . . . . . 2

3.0 PROCEDURE . . . . . 2

3.1 Site Support Manager Duties . . . . . 2

4.0 ATTACHMENTS . . . . . 5

4.1 Manpower Scheduler Duties . . . . . 6
4.2 EOF Administrative Support Staff Duties . . . . . 9
4.3 Telecommunications Manager Duties . . . . . 12
4.4 Offsite Agency Coordinator Duties . . . . . 13
4.5 General Emergency Airspace or Airport Closure Request . . . . . 15
4.6 Site Support Manager Briefing Guidelines . . . . . 16

## 1.0 PURPOSE

This procedure describes responsibilities and duties of the Site Support Manager. The Site Support Manager provides support to the plant and secures assistance and supplies during the emergency and recovery phases. The Site Support Manager supervises the EOF Information Coordinator, the Telecommunications Manager, the Offsite Agency Coordinator, Manpower Scheduler, and the EOF Admin Support Staff.

## 2.0 REFERENCES

2.1 FSAR, Chapter 13.3, Emergency Plan, Section 4.4.2.2

2.2 OER SIL324R6, BWR Emergency Support Program

2.3 PPM 13.4.1, Emergency Notifications

2.4 PPM 13.5.3, Evacuation of Exclusion Area and/or Nearby Facilities

2.5 PPM 13.11.18, Information Coordinator Duties

2.6 PPM 13.13.4, After Action Reporting

2.7 Emergency Response Log, Form 968-23895

2.8 Classification Notification Form, Form 968-24075

2.9 EOF Staffing and Organization Chart, Form 968-26061

2.10 Emergency Manpower Schedule, Form 968-26094

2.11 Manpower Schedule Message, Form 968-26095

## 3.0 PROCEDURE

### 3.1 Site Support Manager Duties

3.1.1 Report to the EOF when notified of an Alert, Site Area or General Emergency, or if directed.

3.1.2 Notify the EOF Manager of your availability.

3.1.3 Maintain an Emergency Response Log (Form No. 968-23895) of the actions you take.

3.1.4 Determine if ERO personnel have been notified for all EOF positions:

- Obtain the Dialogics printout available in the Logistics Area.
- Compare the list of individuals indicating they are responding to the positions listed on the EOF Staffing Chart. If all positions are responding, inform the EOF Manager that personnel have been notified for all EOF positions.
- For unfilled positions, obtain a copy of the Emergency Phone Directory and begin contacting qualified responders for the open positions. Notify the EOF Manager of any positions which cannot be contacted.

3.1.5 Ensure that the Significant Events Status Board and other appropriate displays such as the classification, plant status, and Emergency Classification/Protective Action Status display are maintained by the Information Coordinator.

3.1.6 Complete an EOF Staffing and Organization Chart (968-26061). Distribute copies to EOF Managers.

3.1.7 Compile a copy of staffing and organization charts received from the JIC, TSC and OSC and forward them to the Manpower Scheduler.

NOTE: All requests for outside assistance must first be approved by the Emergency Director.

3.1.8 Obtain outside assistance, equipment or personnel as directed by the Emergency Director. Coordinate deliveries with the Security Manager and the Radiological Emergency Manager.

3.1.9 Assign and supervise administrative support staff as they arrive.

3.1.10 Arrange transportation for evacuation of personnel in the Exclusion Area, if needed. Confer with the Security Manager and Radiological Emergency Manager to determine an assembly area for Exclusion Area evacuees needing transportation.

a. Keys for a vehicle pool van are located in the field team cabinet for use during evacuations.

3.1.11 Support EOF briefings per Attachment 4.7.

3.1.12 Coordinate the obtaining of resources needed to support emergency operations that include, but are not limited to:

NOTE: The on call procurement person should be contacted to assist with procurement and purchasing services. Refer to the Emergency Phone Directory for the roster.

a. Administrative services and equipment

b. Accommodations and transportation for responding offsite personnel, including GE personnel responding to the site under the BWR Emergency Support Program.

c. Finance and purchasing services

d. Commissary services

e. Emergency Response Organization shift relief (for prolonged emergencies)

f. Labor Relations or Human Resources services

g. Legal or insurance services

h. Facility Services

3.1.13 Coordinate with the Plant Administrative Manager on providing personnel, equipment, training, or other administrative resource support for the plant staff.

3.1.14 Coordinate delivery of food and other services with the Security Manager and the Radiation Emergency Manager and the JIC Support Manager.

3.1.15 Discuss relief shift scheduling with the Emergency Director, and arrange for Emergency Response Organization (ERO) relief staffing, if necessary, according to instructions outlined in Attachment 4.2.

3.1.16 When preparing to enter the recovery phase, compile the recovery action lists developed by the TSC and OSC, which identify short and long term recovery items. Forward these action lists to the EOF Manager for input into the master recovery plan.

3.1.17 Refer any calls from the media to the Joint Information Center.

3.1.18 Brief your relief on items of note that happened during your shift and on status of ongoing work.

3.1.19 Upon shift change or termination of the emergency:

a. Prepare an individual after action report. Refer to PPM 13.13.4.

b. Collect the individual after action reports prepared by staff personnel.

c. Deliver all individual after action reports and Emergency Response Logs to the Assistant EOF Manager.

3.1.20 Participate as a member of the After Action Report Committee chaired by the Assistant EOF Manager when required.

## 4.0 ATTACHMENTS

4.1 Manpower Scheduler Duties

4.2 EOF Administrative Support Staff Duties

4.3 Telecommunications Manager Duties

4.4 Offsite Agency Coordinator Duties

4.5 General Emergency Airspace or Airport Closure Request

4.6 Site Support Manager Briefing Guidelines

Duties of: Manpower Scheduler

Assigned Location: Emergency Operations Facility (EOF)

Report To: Site Support Manager

Activation Level: Alert, or Higher Classification

Responsibilities

1. On arrival at the EOF, sign in on the staffing board and report your availability to the Site Support Manager.

2. Maintain an Emergency Response Log (Form 968-23895) of the actions you take.

3. Assist the Site Support Manager with preparing an EOF Staffing and Organization Chart, obtaining charts from other emergency centers, and compiling charts for distribution to EOF Managers. Distribute completed EOF staffing charts to the TSC, OSC, and JIC.

4. Assist the Site Support Manager with contacting and obtaining resources to support the Emergency Response Organization (ERO).

5. Fill open positions in the emergency centers by contacting qualified individuals.

   A. Refer to the Emergency Phone Directory, Part B Notifications section. This should be behind a tab titled, "ERO".

   B. Locate the applicable emergency center position for qualified individuals' phone and pager numbers.

6. When directed by the Site Support Manager, initiate actions for staffing relief shifts.

   NOTE: Plant Operations and Security are on rotating schedules. Additional ERO positions will be coordinated by Operations and Security management.

7. Contact the REM to:

   - Identify safe access routes to the plant.

   - When it is determined that a shift change is required, activate the autodialer at 9-375-6201 and initiate an on the fly message to the ERO using the Manpower Schedule Message (form number 968-26095), and the following instructions:

CAUTION: If you initiate a scenario and a scenario is already running, select the CANCEL option to cancel the running scenario before you activate the new scenario. Do not suspend a running scenario.

Team B should be contacted to relieve Team A, Team C contacted to relieve Team B, Team D contacted to relieve Team C, and Team A contacted to relieve Team D.

a) Call the autodialer. As soon as the Dialogics voice begins, enter INFO (4636) as the password and the pound sign. If the initial greeting completes before being interrupted, hang up and call back.

b) Enter 1000 for the scenario number. This will activate the pagers and phones.

c) Read the prepared message on form 968-26095 when prompted. Press the pound key when done.

d) The dialer will prompt you for verification. Press 9 for yes or 6 for no.

8. Approximately two hours prior to shift change, initiate an informational announcement.

9. Prior to contacting ERO members, determine from the Radiological Emergency Manager (REM) and Security Manager if any hazardous or security conditions require special response instructions to responding personnel. Consideration may need to be given for responding personnel to assemble at a remote location so that pool transportation or monitoring escort may be arranged.

   a) Contact the autodialer at 9-375-6201. As soon as the Dialogics voice begins, enter the password (INFO) and the pound sign. If the initial greeting completes before being interrupted, hang up and call back.

   b) Enter 1010 for the scenario number. This will not activate the pagers or phones.

   c) Record your announcement.

   d) The dialer will promt you for verification. Press 9 for yes or 6 for no.

10. Review the autodialer report for unfilled positions. If positions are unfilled, refer to the Emergency Phone Directory for qualified responders and contact them via the telephone.

11. Notify the Site Support Manager or the JIC Support Manger, as appropriate, of any ERO positions you are unable to fill.

12. Furnish a copy of the compiled list of relief/supplemental staff to center managers.

13. When contacted with requests for information about employees involved with the emergency:

    - Take a call back number and message, and forward the message and number to the individual.

    - Refer emergency messages to personnel as needed.

    - Refer to the autodialer report to determine ERO personnel present.

14. Refer any calls from the media to the Joint Information Center.

15. Brief your relief on items of note that happened during your shift and on status of ongoing work.

16. On shift change or termination of the emergency:

    a. Prepare an individual After Action Report. Refer to PPM 13.13.4.

    b. Deliver all After Action Reports and logs to the Site Support Manager.

Duties of: EOF Administrative Support Staff

Assigned Location: Emergency Operations Facility EOF

Report To: Site Support Manager

Activation Level: Alert, or Higher Classification

Responsibilities

1. On arrival at the EOF, sign in on the staffing board and advise the Site Support Manager of your availability.

2. As necessary, assist with preparing the EOF for operations and answer phones for EOF staff that have not arrived. Take down basic information from callers or get a number for the EOF staff member to call back.

3. Check the EOF facsimile machines to ensure power is on and the date and time is correctly set. Set facsimile time with the EOF's 24-hour clock time.

4. Install batteries in the Crash phone headsets and distribute to positions around the horseshoe area.

5. Check operability of cordless microphones and distribute the primary microphone to the EOF Manager, and the backup to the Information Coordinator.

6. Distribute the position supply baskets from the cabinet to their locations.

7. Make a copy of PPM 13.11.3, Site Support Manager and Staff Duties, and distribute the attachments to the Manpower Scheduler, Admin Support Staff, and Offsite Agency Coordinator.

8. Make a copy of PPM 13.11.18 for the EOF Information Coordinator.

9. Perform general support tasks for EOF staff which includes:

   a. Take or deliver messages, or assist with log keeping.

      NOTE: Emergency center staffing and organization charts that identify the ERO positions and the personnel staffing those positions can be obtained from the Site Support Manager.

   b. Provide facsimile transmittal and EOF distribution services for emergency-related documents.

   c. During drills, stamp all outgoing documents with "Drill Use" prior to distribution or faxing.

1) When you receive a Classification Notification Form (CNF) (Form 968-24075) that is originated by the EOF, transmit the CNF using the group dial according to the distribution list located at the facsimile machine or obtain direction from the Site Support Manager.

2) Notify the Site Support Manager immediately if there are any malfunctions or other delays in transmitting the CNF.

3) For all other document transmittals or distributions, ask for direction from the Site Support Manager if needed.

4) Retain all originals of facsimile documents, with facsimile activity reports.

5) Maintain a log of incoming and outgoing facsimile documents by sequential number and description.

c. Locate and replenish EOF office supplies

NOTE: If you must leave the EOF area of the PSF to obtain supplies, check with the Radiological Emergency Manager (REM) first to obtain information on any hazardous areas to avoid.

d. Provide duplicating services.

e. Verify or duplicate procedures for EOF staff use.

NOTE: Volume 13 Plant Procedure Manuals (PPMs) located in the EOF procedure bookcase on the south wall are Controlled Level 1 copies. EOF Library PPM manuals are Control Level 2. Before use, they must be verified using Passport Document Management System or verified from a Level 1 source such as the TSC or Control Room.

f. Assist with distributing food or beverage services to EOF personnel.

g. Assist with calls to ERO relief/supplemental personnel if requested.

NOTE: An ERO Phone Directory which lists home phone numbers for ERO personnel and an Energy Northwest Directory containing work phone numbers are included in the Emergency Phone Directories.

10. Refer any calls from the Media to the Joint Information Center (JIC).

11. Provide administrative assistance to EOF PIO as requested.

12. On shift change or termination of the event:

    a. Brief your relief on items of note that happened during your shift and on status of ongoing work.

    b. Prepare an After Action Report. Refer to PPM 13.13.4.

    c. Deliver your After Action Report and any logs to the Site Support Manager.

13. At event termination, assist with collating EOF staff after action documentation and returning the EOF to ready configuration.

Duties of: Telecommunications Manager

Assigned Location: Emergency Operations Facility EOF

Report To: Site Support Manager

Activation Level: Alert, or Higher Classification

Responsibilities

1. On arrival at the EOF, sign in on the staffing board and advise the Site Support Manager of your availability.

2 Maintain a chronology of significant events, actions, or problems and resolutions on an Emergency Response Log, Form 968-23895.

3 Monitor telecommunication problem calls and assign technicians to correct system problems.

4 Prioritize work assignments to assure that maintenance or repair of communication systems described in Section 8 of the Energy Northwest's Emergency Preparedness Plan are provided for first.

- Prior to dispatching telecommunications personnel to the Plant, contact the Radiological Emergency Manager (REM), to determine safe approach routes, and the need for protective clothing.

- Direct personnel you dispatch to the Plant to notify Operations Support Center (OSC) of their arrival for accountability purposes.

- Refer any calls from the Media to the Joint Information Center (JIC).

8. On shift change or termination of the event:

   a. Brief your relief on items of note that happened during your shift and on status of ongoing work.

   b. Prepare an After Action Report. Refer to PPM 13.13.4.

   c. Deliver your After Action Report and any logs to the Site Support Manager.

Duties of: Offsite Agency Coordinator

Assigned Location: Emergency Operations Facility EOF

Report To: Site Support Manager

Activation Level: Alert, or Higher Classification

Responsibilities

1. Upon notification of an Alert, Site Area or General Emergency or, if so directed, proceed to the Emergency Operations Facility (EOF) and notify the Site Support Manager of your arrival.

2. If the state or county is not represented at the EOF, request the State and County Liaison to obtain information on county response actions from the Energy Northwest representative at the Washington State, Benton, and Franklin County Emergency Operations Centers (EOC).

3. Contact the Security Communications Center (SCC) Duty Officer and assume responsibility for making the Part C Notifications in accordance with PPM 13.4.1.

   Make the Part C notifications as required for the appropriate event classifications by providing information on items 2-6 on the CNF, as requested (phone numbers are located in the Emergency Phone Directory under Offsite Notification Checklist).

   NOTE: The SCC provides Part C notifications of plant emergency classification levels until relieved of this responsibility.

4. Keep the EOF Manager informed of offsite agencies' decisions, requests, and offers of assistance that are brought to your attention.

5. When the Exclusion Area is evacuated, contact the FFTF Control Room and inform them of this action. This is a courtesy call and no action is required of FFTF at this time. Refer to the Emergency Phone Directory, Offsite Agency tab, for the phone number.

6. At General Emergency, recommend an airspace or airport closure request with the Federal Aviation Administration (FAA), Attachment 4.6.

   a. Copy the completed Attachment 4.6 airspace closure request form and provide it per the distribution list on the Attachment.

   b. If airspace or airport closure occurs, and you become aware that aircraft providing support for emergency operations may need airspace or airport access, request exceptions with the FAA.

7. Refer any calls from the media to the Joint Information Center (JIC).

8. Upon shift change, brief your relief on items of note that happened during your shift and on status of ongoing work.

9. Upon termination of the emergency:

   a. Prepare an individual After Action Report. Refer to PPM 13.13.4

   b. Deliver your After Action Report and any pertinent logs to the Site Support Manager.

## GENERAL EMERGENCY
## TEMPORARY FLIGHT RESTRICTION (TFR) REQUEST

Call the Auburn office of the FAA (Refer to Emergency Telephone Directory for current number) and make a statement similar to the following:

I am _____ of the Energy Northwest Emergency Operations Facility staff. Emergency conditions exist at Columbia Generating Station on the Hanford Reservation. We are releasing (expect to release) radioactive gas to the atmosphere. Accordingly, we recommend that the airspace for 10 miles around the Pasco approach vector (Pasco 305 radial, 18 DME, surface to 5,000 feet above mean sea level) be closed for unauthorized aircraft.

At the present time the plume is (or expected to be) located at: _____

_____

(Obtain plume direction and distance from REM)

Restrictions:

☐ This is expected to infringe upon the approaches to the Richland Airport, therefore, operations should not be authorized for Richland Airport.

☐ This is not expected to infringe upon the approaches to the Richland Airport, therefore, operations should be authorized for Richland Airport.

This is not expected to infringe on the Pasco Airport or responding emergency support personnel.

NOTE: If airport closure is authorized, you may need to call FAA for authorization to land (or take off) aircraft bringing outside responders, or conducting aerial monitoring activity. FAA will need to know the aircraft's identification and arrival (or departure) time for each instance.

I may be reached at (509) (__ __) if you need further information verification, or if someone wishes to request authorization into the area.

CALL COMPLETED BY: _____ DATE:_____ TIME:_____

Copy & distribute to the following EOF personnel:

Radiological Emergency Manager
Security Manager
Benton County Representative
Franklin County Representative
DOE Representative

Comments: _____

Attachment 4.5

## SITE SUPPORT MANAGER BRIEFING GUIDELINES

NOTE: Items listed here are suggested topics for routine update briefing. Items actually selected should be based on existing or projected situation conditions.

Site Support Manager update items:

a. Status of administrative and logistics support being provided (administrative supplies, copy machines, facsimiles, etc.).

b. Status of coordinating offsite agency personnel/equipment response.

c. Status of relief shift or meal scheduling (if applicable).

d. Problem areas needing resolution.

e. NRC counterpart status report (if present).

Notes: _____

_____

_____

ENERGY NORTHWEST

COLUMBIA GENERATING STATION
PLANT PROCEDURES MANUAL

| PROCEDURE NUMBER | APPROVED BY | DATE |
|---|---|---|
| *13.11.7 | DWC - Revision 21 | 09/06/00 |

VOLUME NAME
EMERGENCY PLAN IMPLEMENTING PROCEDURES

SECTION
EMERGENCY OPERATIONS FACILITY

TITLE
RADIOLOGICAL EMERGENCY MANAGER DUTIES

## TABLE OF CONTENTS


Page

1.0 PURPOSE . . . . . 2

2.0 REFERENCES . . . . . 2

3.0 PROCEDURE . . . . . 3

4.0 ATTACHMENTS . . . . . 12

4.1 Checklist for Radiological Emergency Manager Duties . . . . . 13
4.2 Dose Projection Health Physicist Duties . . . . . 19
4.3 Comparison of Field Data with Dose Projections . . . . . 21
4.4 Health Physics Network (HPN) Communicator Duties . . . . . 22
4.5 Health Physics Center (HPC) Staff . . . . . 23
4.6 Health Physics Center Staff Radiological Sample Tracking Instructions . . . 25
4.7 Typical Setup for HP Center Receiving Area (PSF Ambulance Garage) . . 27
4.8 Radiological Emergency Manager Briefing Guidelines . . . . . 28
4.9 Total Population Within the 10 Mile EPZ . . . . . 29
4.10 EOF HVAC Automatic and Manual Operation . . . . . 30

## 1.0 PURPOSE

This procedure describes the emergency responsibilities and duties of the EOF Radiological Emergency Manager (REM), including oversight of: Environmental Field Team activities; dose projection activities; Protective Action Recommendation (PAR) coordination with the Emergency Director; coordinating any offsite monitoring and decontamination activities; Health Physics Center (HPC) activities; and coordination of offsite reentry and Ingestion Pathway activities with Washington State Department of Health (WADOH) personnel. As necessary, portions of the REM duties may be delegated to staff members.

Upon arrival of WADOH representatives and/or the U.S. Department of Energy, Richland Field Office (DOE/RL) representatives, certain REM duties will be administered according to the jurisdictional authority of each agency, with the REM ensuring full cooperation and support to all agencies.

## 2.0 REFERENCES

2.1 FSAR, Chapter 13.3, Emergency Plan, Sections 2 and 6

2.2 PPM 1.9.14, Onsite Medical Emergencies

2.3 PPM 13.2.1, Emergency Exposure Levels/Protective Actions Guides (PAGs)

2.4 PPM 13.2.2, Determining Protective Action Recommendations

2.5 PPM 13.5.3, Evacuation of Exclusion Area and/or Nearby Facilities

2.6 PPM 13.8.1, Emergency Dose Projection System Operations

2.7 PPM 13.9.1, Environmental Field Monitoring Operations

2.8 PPM 13.9.5, Environmental Sample Collection

2.9 PPM 13.9.8, River Evacuation Monitoring

2.10 PPM 13.13.3, Intermediate Phase MUDAC Operations

2.11 PPM 13.13.4, After Action Reporting

2.12 Emergency Response Log, 968-23895

2.13 Ten Mile EPZ Field Team Summary Map, 968-25130

## 3.0 PROCEDURE

3.1 When notified of an Alert, Site Area Emergency or General Emergency, or if directed, report to the Emergency Operations Facility (EOF) and sign in on the EOF staffing board.

3.2 Obtain your procedure book from the wall rack and supply drawer from the EOF supply cabinet.

3.3 Notify the Site Support Manager and EOF Manager (or the TSC Manager if EOF Manager not yet present) of your availability.

3.4 Inform the EOF Manager when MUDAC is operational (dose assessment and field monitoring functions).

NOTE: At an Alert or higher emergency, a Security Officer will be dispatched to the EOF HPC to lock down the Plant Support Facility (PSF) and assist with EOF access control, and with evacuation assembly area accountability.

3.5 At Alert or higher, contact the RPM and request two HP Technicians be dispatched to the EOF for Health Physics Center (HPC) activation.

- Direct the HPC staff to set up HPC facilities and establish EOF habitability monitoring. Refer to Attachment 4.10.

- Ensure appropriate radiological monitoring equipment is positioned (dose rate and air sampling) in the lower level south end PSF near the EOF and periodic dose rate and airborne surveys are performed as necessary.

3.6 Establish and maintain contact with the Radiation Protection Manager (RPM) in the TSC for a briefing on the status of the emergency, and to provide assistance in radiological assessment, mitigation activities, or dose assessments.

- When dose assessment is fully functional, assume responsibility for offsite dose projections from the RPM in the TSC, or the STA in the Control Room.

3.7 In the event of a Protected Area evacuation, assist the RPM with coordinating HP monitoring and decontamination services at the evacuation assembly area.

3.8 If the determination is made to evacuate the Exclusion Area, determine if radiological hazards are exist or are suspected. Determine evacuation routes and hazardous routes to avoid.

3.9 In the event of an Exclusion Area evacuation requiring personnel to report to Energy Northwest Office Complex (ENOC), dispatch an HPC staff member to set up the

assembly area. Refer to PPM 13.7.5 for guidance regarding setup and operation of the assembly area.

3.10 If conditions indicate the need for road closure, evacuation, or other protective measures, coordinate the safe placement of Energy Northwest or local law enforcement agency roadblocks with the Security Manager.

3.11 When notified that personnel must pass through road blocks into radiological hazard areas, determine and implement necessary radiological monitoring and protective clothing requirements.

NOTE: The Energy Northwest administrative exposure hold point (2 rem TEDE) is automatically waived for Energy Northwest emergency workers at Alert or higher emergency classifications and increased to 5 rem TEDE.

NOTE: A radioactive release is in progress when any of the following conditions exist:

- Valid reading exists which exceeds PPM 13.1.1 Table 3 Column UE, OR
- Offsite dose calculations meet or exceeds PPM 13.1.1 Table 4 Column UE levels for TEDE or CDE thyroid, OR
- Field teams measure GE 100 microR ant 1.2 miles.

3.12 If a confirmed radioactive release is in progress, the following steps should be taken:

- Determine the advisability of sheltering or evacuating any manned Exclusion Area facility, i.e., PSF, Laundry, WNP-2, Ashe Substation, River Pumphouse, and determine and direct implementation of radiological protective actions for EOF personnel, based on radiological conditions.

- Refer to PPM 13.2.2, Section 4.3, Offsite PARs Based on Projected Doses, to determine offsite protective actions and act as the Protective Action Decision Group spokesperson in proposing PARs to the EOF Manager (Emergency Director).

- Provide the Emergency Director with updated dose projection results. Information provided should include dose, dose rate, and the basis for the time used for the dose estimates.

- Notify the Emergency Director and the State and County Technical Liaisons if dose rates exceed 250 mrem/hr thyroid, or air sample results exceed 1.4e-7 micro curies/cc iodine 131. Ensure that this information is marked on the CNF.

- Consult with the Field Team Coordinator to ensure the following:

a. Dispatch field teams to traverse at designated distances (i.e., 1.2, 5, and 10 miles) and verify dose rate levels above 100 microrem/hr.

b. Upon identification of a radioactive plume, commence air sampling activities.

c. Identify plume centerline and boundaries (i.e., 100 microrem/hr).

3.13 Determine the need for a dose adjustment factor based on dose projection results or reports from field team members indicating a potential inhalation concern. The dose adjustment factor provides an internal component which should be multiplied by the dosimeter reading to give an estimate of total exposure.

- Using QEDPS, calculate a dose adjustment factor:

  a. If the dose adjustment factor is 5 or greater, a dose adjustment factor of 5 should be implemented.

  b. Provide the dose adjustment factor to the Field Team Coordinator for use in establishing field team exposure limits.

NOTE: Refer to PPM 13.2.1 for guidance on recommending administration of Potassium Iodide (KI) for emergency workers. Be aware that criteria for recommending KI for State, County and DOE personnel are different from those for Energy Northwest personnel.

3.14 Advise the Field Team Coordinator when protective actions need to be taken by field teams, such as KI.

3.15 Review Field Team summary and dose projection summary maps for the plume EPZ, and when applicable, the ingestion EPZ. Have copies transmitted to the JIC, County and State emergency centers.

3.16 Continually assess offsite radiological releases and determine the need to recommend to the Emergency Director to provide authorization to exceed Protective Action Guides (PAGs) for offsite emergency workers, in accordance with PPM 13.2.1, or general public Protective Action Recommendations (PARs) in accordance with PPM 13.2.2.

3.17 Brief all Energy Northwest and offsite MUDAC personnel of impending PAR declarations prior to issuing the PAR.

3.18 As necessary, complete radiological release-related portions of the CNF for PAR modifications.

3.19 Provide PAR updates to the EOF Information Coordinator to maintain the PAR Status Board.

3.20 Conduct periodic briefing sessions of the MUDAC staff on pertinent information from incoming hard copy communications and changes in emergency status.

3.21 Act as a conduit for information flow between MUDAC, HPC personnel, and the main EOF area, and provide input into EOF briefings on status and activities of dose assessment, field monitoring activities, EOF habitability, etc., per Attachment 4.8.

3.22 If necessary, direct the Site Support Manager to contact the Chemistry/Effluent Manager for support of field team sample analysis.

3.23 Distribute MUDAC generated hard copy dose projection information (map and data sheets) to State and County Emergency Operations Centers (EOCs), and retain a copy for MUDAC records.

3.24 When relief from the Health Physics Network (HPN) is requested by the RPM, select a communicator and direct that they maintain the EOF HPN line in accordance with Attachment 4.4. Consider calling in an aditional Dose Projeciton Health Physicist to fill this position.

3.25 If the following conditions exist:

- EOF general area radiation levels exceed 5 mrem/hr as indicated by the EOF radiation monitor, or;
- EOF unidentified airborne radioactivity exceeds 0.3 DAC (0.3 DAC equates to approximately 750 ccpm on a 40 $ft^3$ air sample in the field), then:

  a. Immediately notify the EOF Manager and staff of the condition;

  b. Direct surveillance of airborne activity be increased to <u>once per hour</u> and results reported to you;

  c. Direct dose rates in the area be determined approximately <u>every 15 minutes</u> and results reported to you;

  d. Direct that projected accumulated doses for the EOF personnel be evaluated and appropriate stay times be established;

  e. Prohibit eating or drinking in the EOF until advised of resolution of the EOF airborne activity problem.

3.26 Dispatch a Health Physics Technician to the PSF penthouse to determine if the following conditions exist if the plume is over the PSF:

- PSF intake air activity exceeds 100 mR/hr, or;
- PSF return air activity exceeds 50 mR/hr, then:

  a. Immediately notify EOF Manager and staff of the condition.

  b. Ensure EOF ventilation system is in proper operating mode per Attachment 4.10;

  c. Request the Site Support Manager to notify Facilities to assist, if needed.

3.27 If the emergency worker dose limit of 5 rem is projected to be exceeded over the course of the event for EOF staff, inform the EOF Manager so that plans to evacuate the EOF and activate the Alternate EOF may be initiated.

3.28 Establish and maintain contact with the RPM in the TSC for a briefing on the status of the emergency, and to provide assistance in radiological assessment, mitigation activities, or dose assessment.

3.29 When dose assessment is fully functional, assume responsibility for offsite dose projection from the RPM, or STA in the Control Room.

3.30 Provide the Emergency Director with updated dose projection results. Information provided should include dose, dose rate, and the basis for the time used for the dose estimates.

3.31 Determine the need for a dose adjustment factor based on dose projection results or reports from filed team members indicating potential inhalation concern. The dose adjustment factor provides an internal component which should be multiplied by the dosimeter reading to give an estimate of total exposure.

- Using QEDPS, calculate a dose adjustment factor.
- If the calculated dose adjustment factor is 5 or greater, a dose adjustment factor of 5 should be implemented.
- Request a field team air sample be taken and using the sample results, adjust the dose adjustment factor accordingly.
- Provide the dose adjustment factor to the Field Team Coordinator for use in establishing field team exposure limits.

NOTE: Refer to PPM 13.2.1 for guidance on recommending administration of Potassium Iodide (KI) for emergency workers. Be aware that criteria for recommending KI to State, County and DOE personnel are different from those for Energy Northwest personnel.

3.32 Advise the Field Team Coordinator when protective actions need to be taken by field teams, such as KI.

NOTE: The Energy Northwest administrative hold point (2 rem TEDE) is automatically waived for Energy Northwest emergency workers at Alert or higher emergencies, and increased to 5 rem TEDE.

3.33 Continually assess offsite radiological releases and determine the need to recommend to the Emergency Director to provide authorization to exceed Protective Action Guides (PAGs) for offsite emergency workers at Alert or higher emergency classifications per 13.2.1, or general public Protective Action Recommendations (PARs) per PPM 13.2.2.

- Brief all Energy Northwest and offsite MUDAC personnel of impending PAR declarations prior to issuing the PAR.

3.34 As necessary, complete radiological release-related portions of the CNF for PAR modifications.

3.35 Proved PAR updates to the EOF Information Coordinator for maintaining the PAR status board.

3.36 Conduct periodic briefing sessions of the MUDAC staff on pertinent information from incoming hard copy communications and changes in emergency status.

3.37 Act as a conduit for information flow between MUDAC, HPC personnel and the main EOF area, and provide input into EOF briefings on status and activities if dose assessment, field monitoring activities, EOF habitability, etc., per Attachment 4.8.

3.38 If plant conditions indicate the possibility of an offsite release, direct the Site Support Manager to call in an additional REM to assist in interfacing with offsite agency representatives that have responded to the EOF.

NOTE: A radioactive release is in progress when any of the following conditions exist:
- Valid reading exists which exceeds PPM 13.1.1 Table 3 Column UE, OR
- Offsite dose calculations meet or exceeds PPM 13.1.1 Table 4 Column UE levels for TEDE or CDE thyroid, OR
- Field teams measure GE 100 microR at 1.2 miles.

3.39 If a release is in progress, determine the advisability of sheltering or evacuating any manned Exclusion Area facility, i.e., PSF, Laundry, WNP-2, Ashe Substation, River Pumphouse, and determine and direct implementation of radiological protective actions for EOF personnel, based on radiological conditions.

3.40 Review Field Team summary and dose projection summary maps for the plume EPZ and when applicable, the ingestion zone EPZ, and have copies transmitted to the JIC, County and State emergency centers.

3.41 If necessary, direct the Site Support Manager to contact the Chemistry/Effluent Manager for support of field team sample analysis.

3.42 Determine the distribution of MUDAC generated hard copy information for other Energy Northwest or offsite emergency centers or personnel, and retain a copy for MUDAC records.

3.43 Refer to PPM 13.2.2, section 4.3, Offsite PARs Based on Projected Doses, to determine offsite protective actions and act as the Protective Action Decision Group spokesperson in proposing PARs to the EOF Manager.

3.44 In the event of Protected Area evacuation, assist the RPM with coordinating HP monitoring and decontamination services at the evacuation assembly area.

3.45 If the determination is made to evacuate the Exclusion Area, refer to PPM 13.5.3.

3.46 When relief from the Health Physics Network (HPN) is requested by the RPM, select a communicator and direct that they maintain the EOF HPN line per Attachment 4.4.

3.47 As required, direct appropriate staff to perform the following tasks per Attachment 4.5:

- Prepare, issue and collect direct reading dosimeters and TLDs for emergency response personnel.

- Contact Nuclear and Engineering Support Staff training to determine if respirator training, medical qualifications, and fit testing for emergency support personnel, vendors, and contractors who must enter areas requiring respiratory protection is current.

3.48 If conditions indicate the need for road closure, evacuation or other protective measures, coordinate the safe placement of Energy Northwest or local law enforcement agency roadblocks with the Security Manager.

3.49 When notified that personnel must pass through road blocks into radiological hazard areas, determine and implement necessary radiological monitoring and protective clothing requirements.

3.50 If questioned by State or County officials, provide briefings that explain EOF radiological survey data and dose projection activities that determined Energy Northwest recommendations for protective actions.

3.51 When radiological conditions require evacuation of the Columbia River, indicating the potential for contaminated boaters, or if requested, provide for radiological monitoring of Columbia River evacuees per PPM 13.9.8.

3.52 If Washington State Radcon teams are not available, and establishment of an offsite survey or remote decontamination location is required to handle potentially contaminated personnel, make arrangements for the necessary personnel and equipment.

3.53 If injured or contaminated personnel require offsite medical attention, refer to PPM 1.9.14.

3.54 If additional Energy Northwest personnel resources are needed for Environmental Field Teams, dose assessment or other EOF radiological duties, request the Site Support Manager obtain those resources.

3.55 Assist the Site Support Manager as necessary to establish second shift personnel for dose assessment area staff, environmental field teams and HPC staff.

3.56 If offsite radiological resources are needed, inform the EOF Manager.

3.57 Determine disposition of Environmental Field Team samples gathered pursuant to PPM 13.9.5:

- In consultation with representatives of DOH for samples outside the Hanford Reservation.
- In consultation with representatives of DOE-RL for samples on the Hanford Reservation.

3.58 Upon notification of transfer of plant Post Accident Sample System (PASS) samples, brief HPC Staff on anticipated radiation levels and necessary protective measures.

3.59 Ensure that the Field Teams identifies the trailing edge of the radioactive plume to confirm that the release has ended.

3.60 When emergency activities have resulted in stabilizing the plant, and radiological conditions are progressing from the early phase to the intermediate phase, consider actions to transfer MUDAC leadership to the Washington State Department of Health (WADOH) Representative by:

- Implementing PPM 13.13.3, Intermediate Phase MUDAC Operations.

- Calling in another REM to help during the intermediate phase.
- Arranging additional support with the Site Support Manger to fulfill all responsibilities of MUDAC during this phase.

3.61 Estimate the total population exposure as a result of the radiological release. Consider total dose from EDPS, duration, and length of exposure. Refer to Attachment 4.9.

3.62 Coordinate use of Energy Northwest radiological equipment and manpower resources, authorized by the EOF Manager, to provide assistance to the state in establishing relocation centers, food control zones, or other reentry and recovery activities.

3.63 Refer all calls from media to the Joint Information Center.

3.64 Upon shift change, turn over chronological logs and brief your relief on the current status of the emergency, radiological activities, and status of work being performed.

3.65 Upon shift change or termination of the emergency:

- Prepare an individual After Action Report. Refer to PPM 13.13.4
- Collect individual After Action Reports prepared by staff personnel.
- Deliver all After Action Reports and accompanying sheets to the EOF Manager.

## 4.0 ATTACHMENTS

4.1 Checklist for Radiological Emergency Manager Duties

4.2 Dose Projection Health Physicist Duties

4.3 Comparison of Field Data with Dose Projections

4.4 Health Physics Network (HPN) Communicator Duties

4.5 Health Physics Center (HPC) Staff

4.6 Health Physics Center Staff Radiological Sample Tracking Instructions

4.7 Typical Setup for HP Center Receiving Area (PSF Ambulance Garage)

4.8 Radiological Emergency Manager Briefing Guidelines

4.9 Total Population Within the 10 Mile EPZ

## 4.10 EOF HVAC Automatic and Manual Operation

## CHECKLIST FOR RADIOLOGICAL EMERGENCY MANAGER DUTIES

A. Report to the EOF, sign in on the staffing board, obtain your procedure book and supply drawer.

B. Notify the EOF Manager (or the TSC Manager if EOF Manager not yet present) of your availability.

C. Inform the EOF Manager when MUDAC is operational.

D. Contact the RPM and request two HP Technicians to setup HPC facilities and establish EOF habitability monitoring.

E. Establish and maintain contact with the RPM for a briefing on the status of the emergency, and to provide assistance in radiological assessment, mitigation activities, or dose assessment.

F. When dose assessment is fully functional, assume responsibility for offsite dose projections from the TSC or Control Room.

G. Periodically confer with HPC staff to verify EOF habitability.

H. In the event of a Protected Area evacuation, assist the RPM with coordinating HP monitoring and decontamination services at the evacuation assembly area.

I. In the event of an Exclusion Area evacuation requriring personnel to report to the ENOC, refer to PPM 13.7.5.

J. If a Site Area Emergency is declared, direct the Site Support Manager to call in an additional REM to assist in interfacing with offsite agency representatives that have responded to the EOF.

K. If conditions indicate the need for road closure, evacuation, or other protective measures, coordinate the safe placement of Energy Northwest or local law enforcement agency roadblocks with the Security Manager.

L. When notified that personnel must pass through road blocks into radiological hazard areas, determine and implement necessary radiological monitoring and protective clothing requirements.

M. A radioactive release is in progress when any of the following conditions exist:

- Valid reading exists which exceeds PPM 13.1.1 Table 3 Column UE, OR
- Offsite dose calculations meet or exceeds PPM 13.1.1 Table 4 Column UE levels for TEDE or CDE thyroid, OR
- Field teams measure GE 100 microR ant 1.2 miles.

N. If a confirmed radioactive release is in progress, the following steps should be taken:

- Determine the advisability of sheltering or evacuating any manned Exclusion Area facility, i.e., PSF, Laundry, WNP-2, Ashe Substation, River Pumphouse, and determine and direct implementation of radiological protective actions for EOF personnel, based on radiological conditions.

- Refer to PPM 13.2.2, Section 4.3, Offsite PARs Based on Projected Doses, to determine offsite protective actions and act as the Protective Action Decision Group spokesperson in proposing PARs to the EOF Manager (Emergency Director).

- Provide the Emergency Director with updated dose projection results. Information provided should include dose, dose rate, and the basis for the time used for the dose estimates.

- Notify the Emergency Director and the State and County Technical Liaisons if dose rates exceed 250 mrem/hr thyroid, or air sample results exceed 1.4e-7 micro curies/cc iodine 131. Ensure that this information is marked on the CNF.

O. Determine the advisability of sheltering or evacuating any manned Exclusion Aea facility, i.e., PSF, Laundry, WNP-2, Ashe Substation, River Pumphouse, and determine and direct implementation of radiological protective actions for EOF personnel based on radiological conditions.

P. Refer to PPM 13.2.2, Section 4.3, Offsite PARs Based on Projected Doses,, to deterine offsite protective actions, and act as the Protective Action Decision Group spokesperson in proposing PARs to the EOF Manager (Emergency Director).

Q. Provide the Emergency Director with updated dose projection results. Information provided should include dose, dose rate, and the basis for the time used for the dose estimates.

R. Consult with the Field Team Coordinator to ensure the following:

- Dispatch field teams to traverse at designated distances (i.e., 1.2, 5, and 10 miles) and verify dose rate levels above 100 microrem/hr.

- Upon identification of a radioactive plume, commence air sampling activities.

- Identify plume centerline and boundaries (i.e., 100 microrem/hr).

- Determine the need for a dose adjustment factor based on dose projection results or reports from Field Team members indicating potential inhalation concern. The dose adjustment factor provides an internal component which should be multiplied by the dosimeter reading to give an estimate of total exposure.

S. Using QEDPS, calculate a dose adjustment factor:

- If the dose adjustment factor is 5 or greater, a dose adjustment factor of 5 should be implemented.

1. Provide the dose adjustment factor to the Field Team Coordinator for use in establishing field team exposure limits.

NOTE: Refer to PPM 13.2.1 for guidance on recommending administration of Potassium Iodide (KI) for emergency workers. Be aware that criteria for recommending KI for State, County and DOE personnel are different from those for Energy Northwest personnel.

T. Advise the Field Team Coordinator when protective actions need to be taken by field teams, such as KI.

U. Review Field Team summary and dose projection summary maps for the plume EPZ, and when applicable, the ingestion EPZ. Have copies transmitted to the JIC, County and State emergency centers.

V. Continually assess offsite radiological releases and determine the need to recommend to the Emergency Director to provide authorization to exceed Protective Action Guides (PAGs) for offsite emergency workers, in accordance with PPM 13.2.1, or general public Protective Action Recommendations (PARs) in accordance with PPM 13.2.2.

W. Brief all Energy Northwest and offsite MUDAC personnel of impending PAR declarations prior to issuing the PAR.

X. As necessary, complete radiological release-related portions of the CNF for PAR modifications.

Y. Provide PAR updates to the EOF Information Coordinator to maintain the PAR Status Board.

Z. Conduct periodic briefing sessions of the MUDAC staff on pertinent information from incoming hard copy communications and changes in emergency status.

AA. Act as a conduit for information flow between MUDAC, HPC personnel, and the main EOF area, and provide input into EOF briefings on status and activities of dose assessment, field monitoring activities, EOF habitability, etc., per Attachment 4.8.

AB. If necessary, direct the Site Support Manager to contact the Chemistry/Effluent Manager for support of field team sample analysis.

AC. Distribute MUDAC generated hard copy dose projection information (map and data sheets) to State and County Emergency Operations Centers (EOCs), and retain a copy for MUDAC records.

AD. When relief from the Health Physics Network (HPN) is requested by the RPM, select a communicator and direct that they maintain the EOF HPN line in accordance with Attachment 4.4. Consider calling in an additional Dose Projection Health Physicist to fill this position.

AE. If the following conditions exist:

- EOF general area radiation levels exceed 5 mrem/hr as indicated by the EOF radiation monitor, or;

- EOF unidentified airborne radioactivity exceeds 0.3 DAC (0.3 DAC equates to approximately 750 ccpm on a 40 $ft^3$ air sample in the field), then:

  Immediately notify the EOF Manager and staff of the condition;

  Direct surveillance of airborne activity be increased to once per hour and results reported to you;

  Direct dose rates in the area be determined approximately every 15 minutes and results reported to you;

  Direct that projected accumulated doses for the EOF personnel be evaluated and appropriate stay times be established;

  Prohibit eating or drinking in the EOF until advised of resolution of the EOF airborne activity problem.

AF. Dispatch a Health Physics Technician to the PSF penthouse to determine if the following conditions exist if the plume is over the PSF:

- PSF intake air activity exceeds 100 mR/hr, or;

- PSF return air activity exceeds 50 mR/hr, then:

  - Immediately notify EOF Manager and staff of the condition.

  - Ensure EOF ventilation system is in proper operating mode per Attachment 4.10;

  - Request the Site Support Manager to notify Facilities to assist, if needed.

AG. If the emergency worker dose limit of 5 rem is projected to be exceeded over the course of the event for the EOF staff, inform the EOF Manager so plans to evacuate the EOF and activate the Alternate EOF may be initiated.

AH. As required, direct appropriate staff to perform the following tasks in accordnace with Attachment 4.5:

1. Prepare, issue, and collect direct reading dosimeters and TLDs for emergency response personnel.

2. Contact Nuclear and Engineering Support Training to determine if respirator training, medical qualifications, and fit testing for emergency support personnel, vendors, and contractors who must enter areas requiring respiratory protection are current.

AI. When notified that personnel must pass through road blocks into radiological hazard areas, determine and implement necessary radiological monitoring and protective clothing requirements.

AJ. If questioned by State or County officials, provide briefings that explain EOF radiological survey data and dose projection activities that determined Energy Northwest recommendations for protective actions.

AK. When radiological conditions require evacuation of the Columbia River, indicating the potential for contaminated boaters, or, if requested, provide for radiological monitoring of Columbia River evacuees per 13.9.8.

AL. If Washington State Radcon teams are not available, and establishment of an offsite survey or remote decontamination location is required to handle potentially contaminated personnel, make arrangements for the necessary personnel and equipment.

AM. If injured or contaminated personnel require offsite medical attention, refer to PPM 1.9.14.

AN. If additional Energy Northwest personnel resources are needed for Environmental Field Teams, dose assessment or other EOF radiological duties, request the Site Support Manager obtain those resources.

AO. Assist the Site Support Manager as necessary to establish second shift personnel for dose assessment area staff, environmental field teams and HPC staff.

AP. If offsite radiological resources are needed, inform the EOF Manager.

AQ. Upon notification of transfer of PASS samples, brief HPC staff on anticipated radiation levels and necessary protective measures.

AR. Ensure field team identifies the back edge of the radioactive plume to confirm the release has ended.

AS. When emergency activities have resulted in stabilizing the plant, and radiological conditions are progressing from the early phase to the intermediate phase, consider actions to transfer MUDAC leadership to the Washington State Department of Health (WADOH) Representative by:

1. Implementing PPM 13.13.3, Intermediate Phase MUDAC Operations.
2. Calling in another REM to help during the intermediate phase.

3. Arranging additional support with the Site Support Manager to fulfill all responsibilities of MUDAC during this phase.

AT. Estimate the total population exposure as a result of the radiological release. Consider total dose from EDPS, duration and length of exposure. Refer to Attachment 4.9.

AU. Coordinate the use of Energy Northwest radiological equipment and manpower resources, authorized by the EOF Manager, to provide assistance to the State in establishing relocation centers, food control zones, or other reentry and recovery activities.

AV. Refer all calls from the media to the Joint Information Center.

AW. Upon shift change, turn over chronological logs and brief your relief on the current status of the emergency, radiological activities, and status of work being performed.

Duties of: Dose Projection Health Physicist

Assigned Location: Meteorology and Unified Dose Assessment Center (MUDAC)

Report to: Radiological Emergency Manager (REM)

Responsibilities:

1. Activate the Emergency Dose Projection System (EDPS) PCs, printers, the LAN and PDIS terminals. Keep the REM updated on the status of the systems and important information that could affect dose projections.

2. Activate the RSTAT summary display (a PDIS form display of TDAS signals from the STAR System) and determine if there are elevated readings from monitors that may indicate a release in progress. PDIS may be used to retrieve past TDAS readings. Contact the EOF PDIS Analyst to retrieve historical data.

3. Perform plume tracking and dose projection functions to keep the EOF staff informed of the plume projection. Maintain close contact with the Engineering Assessment group and Information Coordinator for the current plant condition.

4. Obtain the latest weather forecast (refer to the EDPS User's Manual) from the National Weather Service or PNNL Weather Forecaster, and ensure the Meteorological Information board is updated. Advise the REM and Field Team Coordinator of weather conditions which may affect plume direction, deposition, or dispersion.

   NOTE: Phone numbers of the weather services are located in the Emergency Phone Directory in the Offsite Agency Section and PPM 13.8.1.

5. Review dose projection results and inform the REM of projections approaching EAL and PAR values.

6. Complete a dose projection for the REM's consideration.

   a. Verify operability of SGTS based on flow rate or engineering input.

   b. Follow the guidance in PPM 13.8.1 concerning default entries and estimates for the dose projection models.

   c. Make dose estimates for at least the distances of 1.2 miles, 2 miles, 5 miles, and 10 miles.

      NOTE: 1.2 miles is the distance used for the site boundary.

Duties of: Dose Projection Health Physicist (Contd.)

7. Coordinate and verify radiation conditions and equipment status with the Radiation Detection Systems Engineer.

8. Compare field team measurements to dose projection estimates using the guidance in Attachment 4.3, including terrain knowledge, weather conditions and sampling theory.

9. If there are significant, unexplainable differences between field samples and dose projections, consult with the REM regarding appropriate adjustments to be made.

10. Inform the Field Team Coordinator, REM, and staff of significant, verifiable changes in release rates, meteorology, or Emergency Worker Dose Factors.

11. As requested, provide completed Dose Projection Summary Maps for the REM to review.

12. Label and validate by signature, printed data or maps for distribution, and maintain a copy of all authorized projections and maps.

13. When the transition to ingestion phase has been completed, generate an EDPS dose projection map for the 500 $\mu$R and 2 $\mu$R isopleths. Refer to PPM 13.8.1, Attachment 5.1 for guidance on contour options.

14. During shift change, brief your relief on the current status of work in progress, and ensure that they understand the basis for the current dose projection and field team readings.

15. Prepare and deliver to the REM all After Action Reports, logs, authorized projections and analyses as requested.

16. Retain a copy of completed dose projection worksheets, display outputs or maps you generate and attach them to your After Action Report.

17. Assist the HPN Coordinator in obtaining answers to NRC queries.

## COMPARISON OF FIELD DATA WITH DOSE PROJECTIONS

1. Exposure Rate Readings

   A. Using QEDPS, input field team air sample results or dose rate into the code and compare resultant TEDE values at various distances with TEDE values from a projection based on plant monitor readings.

   B. Compare exposure rate measurements reported by field teams to a projected External Dose Rate for the same downwind distance.

   C. Consider the following in making your comparison:

      1) The time that the field measurement was made vs. the time that the projected release would reach the downwind distance based on wind speed.

      2) If release rates change significantly, then consider the time it would take the lower or higher effluent concentrations to reach the field team measurement location based on wind speed.

      3) Changes in sampling time, wind speed, wind direction, and stability class will cause field team readings to differ from dose projections.

2. Iodine Concentrations

   A. Using QEDPS, input field team air sample results and compare resultant Thyroid CDE values at various distances with Thyroid CDE from a projection based on plant monitor readings.

      1) To convert field team air sample results to micro curies/cc, select either the particulate or cartridge icon on the Windows Desktop. When the program is active, enter the field team results to calculate the necessary value.

      2) Compare the Thyroid CDE rate based on field team data to a projected Thyroid CDE rate for the same downwind distance.

   B. Consider the items from Step 1.C of this Attachment when making your comparison.

Attachment 4.3

Duties of: Health Physics Network (HPN) Communicator

Assigned Location: Emergency Operations Facility (EOF)

Report to: Radiological Emergency Manager

Responsibilities:

1. Upon assignment obtain a briefing from the REM on the current status of the emergency and the known or anticipated radiological conditions and/or releases.

2. Activate the EOF extension of the HPN phone, following instructions attached to the HPN phone. Introduce yourself to the NRC communicator, and provide information on the current status of radiological conditions.

3. After assuming duties observe the requirements of 10CFR50.72(c)(3) by maintaining continuous communications when requested by the NRC. If you must leave the phone for any reason, find someone to maintain the phone in your absence, or obtain permission to leave the phone unattended.

4. Maintain a log of communications on Emergency Response Log, (Form 968-23895).

5. Contact the REM for assistance with resolving NRC information requests. Consult the REM when asked to make commitments you do not feel you are authorized to make.

6. As necessary, brief the REM on the status of HPN communications.

7. Ensure transmissions you relay are distinct and understood. Avoid the use of acronyms unless you are sure they are understood and ensure the correct letters of acronyms are understood by using phonetic spelling to clarify, i.e., "B" as in Bravo or "D" Delta.

8. Ensure data you transmit to the NRC represents factual information only. Do not provide speculative information or editorialize on data and do not engage in problem solving discussions.

9. Upon shift change, brief your relief on responsibilities, duties and the current status of HPN communications with the NRC.

10. Upon shift change or termination of the emergency:

    a. Prepare an individual After Action Report. Refer to PPM 13.13.4.

    b. Deliver After Action Report and logs to the REM.

Duties of: Health Physics Center (HPC) Staff

Assigned Location: Health Physics Center Work Areas

Report to: Radiological Emergency Manager (REM)

Responsibilities:

NOTE: At an Alert or higher classification, Security provides an officer to lock down the Plant Support Facility (PSF); the officer then assists the HPC staff with access control through the HPC ambulance bay.

HPC Staff:

1. Prepare ambulance garage area and decontamination facility to receive samples and personnel. Ensure PA speaker controls are set to maximum levels. Refer to Attachment 4.7.

2. Prepare the radiological laboratory and Counting Room to receive and analyze environmental and in-plant samples.

3. Position a Continuous Air Monitor (CAM) in the lower level south end PSF near the EOF and ensure operability of the EOF area radiation monitor for EOF habitability monitoring.

4. Obtain protective clothing and respirators from an appropriate location if needed.

5. Report to the Radiological Emergency Manager when all assigned systems are in a state of readiness.

6. Obtain friskers and dose rate instruments, perform daily checks, then distribute to the Ambulance Bay area radiological laboratories.

7. Frequently monitor the operation of the area radiation and airborne monitors.

8. When directed, take and evaluate direct radiation and/or contamination surveys in areas of the Plant Support Facility (PSF, EOF).

9. Question Field Team members delivering samples on whether self-frisking has been performed by, or under the supervision of a qualified HP member, and if not, perform a frisk.

10. Obtain and analyze hi-volume air samples inside and outside of PSF as necessary.

HPC Staff, (cont'd)

11. Perform decontamination of personnel as required and report results to the Radiological Emergency Manager.

12. Insure the use of appropriate radiological precautions and good practices by all individuals involved with handling of samples throughout the sampling and survey sequence.

13. Enter electronic dosimeter results in the Total Exposure System (TES) for personnel completing a shift, or as directed. Reset dosimeter to the fast entry mode.

14. Return reset electronic dosimeters to the EOF Field Team Cabinet.

15. Monitor radiation levels in any area where samples are stored and post area(s) as necessary, or move samples to a shielded area.

16. Maintain a record of your actions on an Emergency Response Log per PPM 13.13.4.

17. Upon shift change, brief your relief on responsibilities, duties and current status of work being performed.

18. Upon shift change, or termination of the emergency:

    a. Prepare an individual After Action Report per PPM 13.13.4.

    b. Deliver your After Action Report and Log(s) to the REM.

## HEALTH PHYSICS CENTER STAFF
## RADIOLOGICAL SAMPLE TRACKING INSTRUCTIONS

1. Receive, survey, sort and catalog samples as they are delivered by Environmental Field Teams.

2. Adhere to appropriate radiological precautions and good practices in the handling of samples throughout the sampling and survey sequence.

3. Question Field Team members delivering samples on whether self-frisking has been performed by, or under the supervision of a qualified HP member, and if not, perform a frisk.

4. For receipt and handling of PASS samples ensure that appropriate cautions are in place and that all personnel are properly dressed out for all aspects of survey and handling procedures.

5. Perform radiation and contamination surveys on all incoming samples. Rebag all samples which are contaminated on the outer surface. Sort and store samples based on radiation levels to control exposures in the ambulance bay.

6. Ensure sample identification data is on the outside of the sample bag and the date, time and survey results are on Sample Identification Form.

7. Place the sample in storage and note the storage location on the Sample Identification Form and enter the storage date and time on the Sample Receipt Log, page 2 of this attachment.

8. When analysis of a specific sample is requested, retrieve sample and the appropriate copies of the Sample ID Form.

9. Record the new location (lab where sample is being analyzed) on the Sample ID form and the date and time of transfer on the Sample Receipt Log.

10. Send the sample to the lab or other assigned destination with the accompanying white and canary pages.

11. Refile the pink page of the Sample Identification Form in the HP Center file.

12. When samples are returned to the storage area, retrieve Sample Identification Form from HP Center file.

13. Note storage location on the white, canary and pink pages and enter the new storage date and time on the Sample Receipt Log.

14. Return the canary and pink copies to the HP Center file and return the white copy with the sample back to storage.

HEALTH PHYSICS CENTER STAFF
RADIOLOGICAL SAMPLE TRACKING INSTRUCTIONS

SAMPLE RECEIPT LOG

| SAMPLE IDENTIFICATION NUMBER | STORAGE | | LAB | | STORAGE | | REMARKS |
|---|---|---|---|---|---|---|---|
| | DATE | TIME | DATE | TIME | DATE | TIME | |
| | | | | | | | |
| | | | | | | | |
| | | | | | | | |
| | | | | | | | |
| | | | | | | | |
| | | | | | | | |
| | | | | | | | |
| | | | | | | | |
| | | | | | | | |
| | | | | | | | |
| | | | | | | | |
| | | | | | | | |
| | | | | | | | |
| | | | | | | | |
| | | | | | | | |
| | | | | | | | |
| | | | | | | | |
| | | | | | | | |
| | | | | | | | |
| | | | | | | | |
| | | | | | | | |
| | | | | | | | |

Attachment 4.6
Page 2 of 2

# TYPICAL SET-UP FOR PSF HEALTH PHYSICS CENTER RECEIVING AREA (PSF AMBULANCE GARAGE)

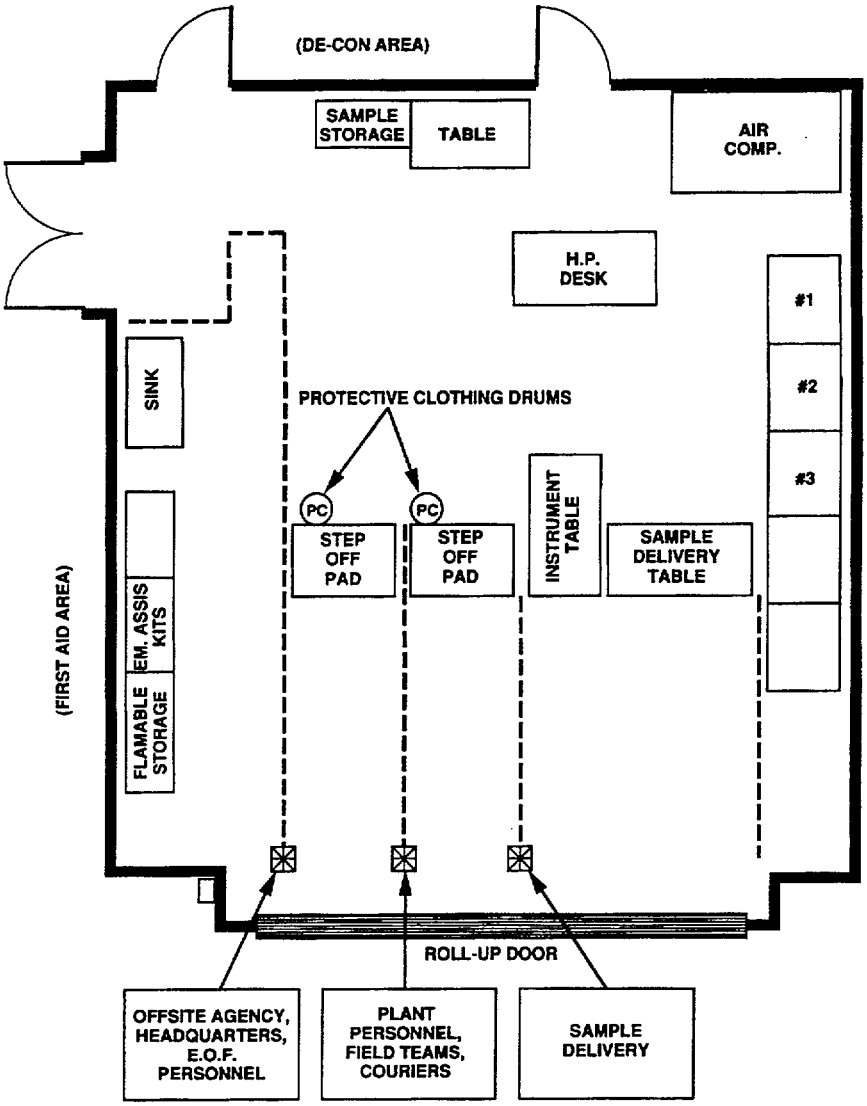


LEGEND:

1. — — — INDICATES WHERE TO PLACE ROPE BARRIERS
2. ⊠ INDICATES WHERE TO POST SIGNS

890276

Attachment 4.7

## RADIOLOGICAL EMERGENCY MANAGER BRIEFING GUIDELINES

NOTE: Items listed here are suggested topics for routine update briefing. Items actually selected should be used based on existing or projected plant or radiological conditions.

Radiological Emergency Manager (REM) update items:

a. Current release rate, recent trends, prognosis.

b. Offsite dose projection results and most recent follow-up messages to offsite authorities.

c. Energy Northwest (and offsite agency) field team survey results and their comparison to dose projection model results.

d. Dose projection comparison with state or other agency results.

e. Current and forecast meteorology on wind direction, shifts.

f. Status of offsite protective action implementation.

g. EOF habitability survey results and any protective actions or safe routes necessary for emergency workers outside the EOF.

h. Problem areas needing resolution.

i. NRC counterpart status report (if present).

Notes: _____

_____

_____

# TOTAL POPULATION WITHIN THE 10 MILE EPZ

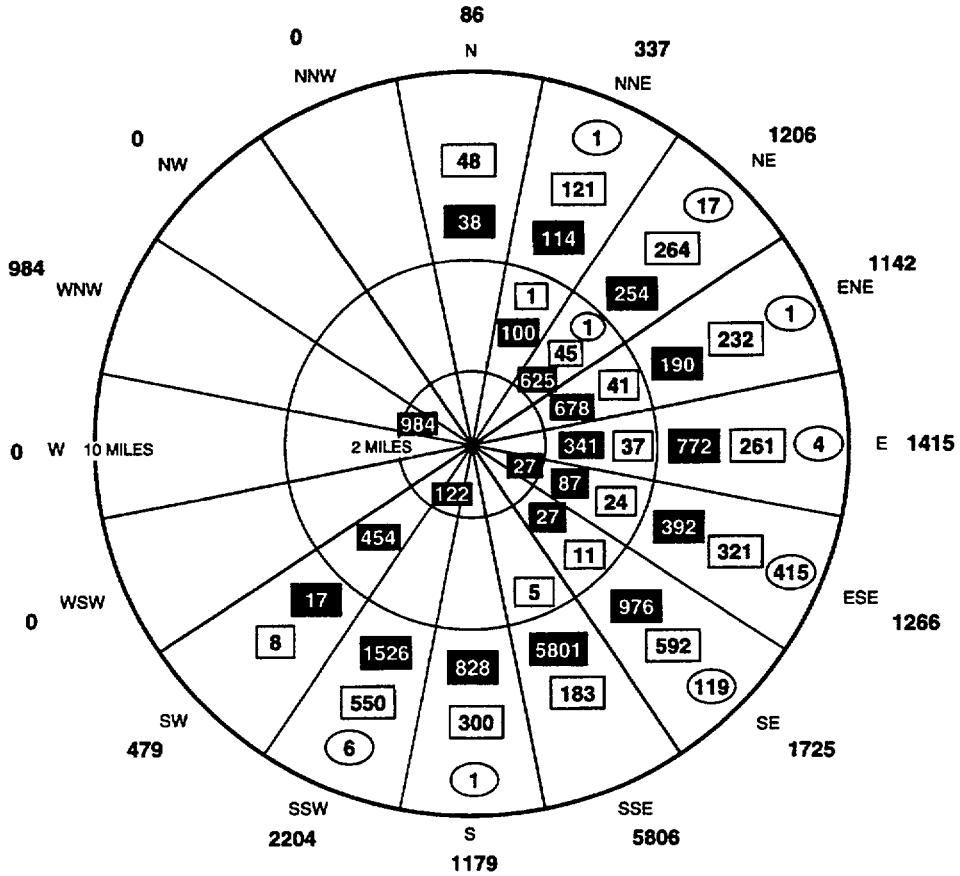


17,829 TOTAL SEGMENT POPULATION 0 TO 10 MILES

| POPULATION TOTALS - PERMANENT | | | |
|---|---|---|---|
| RING MILES | RING POPULATION | TOTAL MILES | CUMULATIVE POPULATION |
| 0-2 | 0 | 0-2 | 0 |
| 2-5 | 164 | 0-5 | 164 |
| 5-10 | 2880 | 0-10 | 3044 |

| POPULATION TOTALS - TRANSIENT | | | |
|---|---|---|---|
| RING MILES | RING POPULATION | TOTAL MILES | CUMULATIVE POPULATION |
| 0-2 | 1133 | 0-2 | 1133 |
| 2-5 | 2312 | 0-5 | 3445 |
| 5-10 | 10,775 | 0-10 | 14,220 |

| POPULATION TOTALS - SPECIAL | | | |
|---|---|---|---|
| RING MILES | RING POPULATION | TOTAL MILES | CUMULATIVE POPULATION |
| 0-2 | 0 | 0-2 | 0 |
| 2-5 | 1 | 0-5 | 1 |
| 5-10 | 564 | 0-10 | 565 |

| POPULATION TOTALS | | | |
|---|---|---|---|
| RING MILES | RING POPULATION | TOTAL MILES | CUMULATIVE POPULATION |
| 0-2 | 1133 | 0-2 | 1133 |
| 2-5 | 2477 | 0-5 | 3610 |
| 5-10 | 14,219 | 0-10 | 17,829 |

870747.8
June 1996
Rev 18

Attachment 4.9

## EOF HVAC AUTOMATIC AND MANUAL OPERATION

MODE 1 - PSF Isolation

If outside air activity causes the intake air radiation monitor on AHU-1 to trip at 100 mR/hr, the HVAC panel in Room 121 will indicate as follows:

| | | | | | |
|---|---|---|---|---|---|
| AHU-1: | lighted | AHU-2: | lighted | Misc.: | lighted |
| EOF ISOL.: | off | AD4B: | off | SF3: | lighted |

This configuration isolates the PSF and recirculates first floor air through HEPA filters.

MODE 2 - EOF Isolation

If return air activity causes the return air radiation monitor on AHU-1 to trip at 50 mR/hr, the HVAC panel in Room 121 will indicate as follows:

| | | | | | |
|---|---|---|---|---|---|
| AHU-1: | lighted | AHU-2: | lighted | Misc.: | lighted |
| EOF ISOL.: | lighted | AD4B: | lighted*<br>off** | SF3: | off |

In this configuration, the EOF is sealed off from the rest of the PSF. Fan SF-3 recirculates EOF air through HEPA filters.

* Chem Lab exhaust hood is OFF.
** Chem Lab exhaust hood is ON.

MODE 3 - EOF Stagnation

If the SF-3 return air radiation monitor trips at 50 mR/hr, SF-3 will stop and the EOF will remain isolated as in Mode 2. The SF-3 light on the Room 121 panel will be ON.

MANUAL OPERATION

| |
|---|
| CAUTION: Due to the potential for airborne contamination and area radiation, HP surveys of the following areas should be performed prior to entry. |

Modes 1 & 2:

Obtain EOF HVAC key (1 F 8) from EOF key locker. Enter stairwell on 2nd floor east side by Auditorium entrance.

At top of stairs, continue left 180°, facing east wall. Above handrail at your left are two radiation indicators. Above the indicators, the gray box contains the switches for Modes 1 and 2.

Mode 3:

Enter SF-3 fan room, Rm 123. Radiation indicator is inside large gray cabinet on north wall next to door facing Room 121. Disconnect switch for SF-3 is around other side of fan from radiation indicator, on north wall. Throw this switch to OFF to stop SF-3.