Westinghouse Electric Company
Nuclear Services

2000 Day Hill Road
Windsor, CT 06095
USA

NRC Project 692

CEOG-00-260
September 8, 2000

Mr. Stuart A. Richards, Director
Division of Licensing Project Management
U.S. Nuclear Regulatory Commission
Washington, D.C. 20555-0001

Subject: CEOG Topical Report, CE NPSD-1168, "Joint Applications Report for Containment Isolation Valve AOT Extension," Errata

Reference: Stuart A. Richards (NRC) to Ralph Phelps (CEOG), Acceptance for Referencing of Combustion Engineering Owners Group CE NPSD-1168, "Joint Applications Report for Containment Isolation Valve AOT Extension" (TAC No. MA6288), Letter dated June 26, 2000

Dear Mr. Richards:

The purpose of this letter is to document errata in the subject report found subsequent to staff issuance of the reference safety evaluation. These errata principally involve editorial or typographical changes and a correction, from 3.73E-3 to 3.75E-3, in the total conditional core damage probability value. This numeric correction propagated into other calculated values shown in various sections of the report and in the technical evaluation (SCIE-NRC-394-99) issued with the above reference. Westinghouse CE Nuclear Services has evaluated this change in numeric value and confirmed that it has no impact on the conclusions given in CE NPSD-1168.

An errata list for CE NPSD-1168 is attached along with revised pages that reflect these corrections. CENP plans to incorporate the revised pages, less margin bars, in the approved version of the topical report. We request that the Staff review the changes and concur with this approach.

Please do not hesitate to contact Virgil Paggen at 860-285-4700 or me at 860-285-5494 if you have any questions,

Sincerely yours,

Gordon Bischoff
Project Manager
CE Owners Group

D047

cc: J. S. Cushing (NRC)
R. L. Phelps (OPPD)
R. E. Schneider (W)
V. Paggen, (W)
CEOG Library Task 849

Attachment:
1. List of Errata for CE NPSD-1168
2. Change Pages for CE NPSD-1168

List of Errata for CE NPSD-1168

The following identify errata in the Containment Isolation Valve AOT Extension Topical Report, CE NPSD-1168. These errata list the changes needed and the affected pages in this report. CENP has evaluated these changes and confirm they have no impact on the conclusions given in CE NPSD-1168. Following Staff concurrence, these changes will be incorporated in the approved topical report, CE NPSD-1168-A.

1. Page 20, 2nd sentence of last paragraph: Change "6.3.3" to "6.5".
2. Page 38, definition of λ_1: Change "(g)" to "(f)".
3. Page 38, definition of d_2: Change "(f)" to "(e)".
4. Page 38, definition of T: Change "(h)" to "(g)".
5. Page 39, expression for ISLOCA: Change "2.19E-08" to "2.17E-08".
6. Page 39, expression for ICCDP=ICLERP: Change "2.19E-08" to "2.17E-08" and "4.19E-10" to "4.16E-10".
7. Page 41, expression for $CCDP_{SL}$: delete the words "... the interaction..." and change "3.73E-3" to "3.75E-3".
8. Page 42, expression for ICCDP=ICLERP: Change "3.73E-3" to "3.75E-3" and "8.23E-10" to "8.27E-10".
9. Page 42, 1st sentence of 2nd paragraph: Change "(CCDP)" to "$CCDP_{SL}$".
10. Page 44, expression for $CCDP_{SL}$: Change "3.73E-3" to "3.75E-3".
11. Page 45, expression for ICCDP: Change "3.73E-3" to "3.75E-3" and "5.45E-10" to "5.57E-10".
12. Page 45, expression for ICLERP: Change "5.54E-10" to "5.57E-10" and "8.59E-13" to "8.63E-13".
13. Page 45, expression for ICCDP=CLERP: Change "CLERP" to "ICLERP".
14. Page 45, below the definition of ICCDP: Add the following "ICLERP = the incremental conditional large early release probability."
15. Page 45, expression for ICCDP/ICLERP: Change "ICCDP/ICLERP" to "ICCDP = ICLERP".
16. Page 54, 2nd paragraph: Change "6.2.3.6.2" to "6.3.2.6.2.1" and "6.2.3.6.3" to "6.3.2.6.2.2".
17. Page 54, last sentence of 3rd paragraph: Remove extra period (.) from end of sentence.
18. Page 58, definition of AOT: Change "186" to "168".
19. Page 59, change section number from "6.3.2.6.3" to "6.3.2.6.2.2".
20. Page 66, 2nd row under ICLERP Risk Ratio of Table 6.3-3: Change "2.95E-5" to "2.96E-5".
21. Page 66, 8th row under ICCDP, ICLERP, ICCDP Risk Ratio, and ICLERP Risk Ratio of Table 6.3-3: Change "4.19E-10" to "4.16E-10" , "8.4E-4" to "8.3E-4", and "8.4E-3" to "8.3E-3".
22. Page 66, 9th row under ICCDP and ICLERP of Table 6.3-3: Change "8.23E-10" to "8.27E-10".
23. Page 66, 11th row under ICCDP, ICCDP Risk Ratio, and ICLERP Risk Ratio of Table 6.3-3: Change "5.54E-10" to "7.82E-09", "1.1E-3" to "1.56E-2", and "5.8E-4" to "1.56E-1".
24. Page 66, 18th row under ICLERP Risk Ratio of Table 6.3-3: Change "1.7E-5" to "1.2E-5".
25. Page 67, Note 3: Change "CCDP" to "ICCDP" and "inside" to "outside".
26. Page 67, Note 5: Change "CCDP" to "ICCDP".
27. Page 72, Reference 19: Change "50363" to "50-362".

End of CE NPSD-1168 Errata List

CEOG-00-260

Attachment 2

Change Pages for CE NPSD-1168

days, the limiting LCO associated with the CIV in the open position will become the one associated with the AFWS operability.

6.3 Assessment of Risk

6.3.1 Overview

The purpose of this section is to provide an integrated assessment of the overall plant risk associated with the adoption of the proposed AOT extension for the CIVs. The methodology used to evaluate the CIV AOT extension was based in part on the guidance provided in Regulatory Guide 1.174 (Reference 8) and Regulatory Guide 1.177 (Reference 9). These Regulatory Guides outline criteria for the acceptability of a Technical Specification modification.

Regulatory Guide 1.177 provides the acceptance guidelines that are specific to AOT changes. The extracted guidelines from this Regulatory Guide are as follows:

- The licensee has demonstrated that the TS AOT change has only a small quantitative impact on plant risk. An Incremental Conditional Core Damage Probability (ICCDP) of less than 5.0E-7 is considered small for a single TS AOT change. An Incremental Conditional Large Early Release Probability (ICLERP) of 5.0E-8 or less is also considered small. Also, the ICCDP contribution should be distributed in time such that any increase in the associated conditional risk is small and within the normal operating background (risk fluctuations) of the plant (Tier 1).

- The licensee has demonstrated that there are appropriate restrictions on dominant risk-significant configurations associated with the change (Tier 2).

- The licensee has implemented a risk-informed plant configuration control program. The licensee has implemented procedures to utilize, maintain, and control such a program (Tier 3).

Section 6.3.2 provides a risk assessment of the CIV AOT extension with respect to consideration of the associated "at power" risks only. Section 6.5 provides an estimate of the transition risk that would be incurred when a plant shutdown is required. As will be discussed in that section, transition risks arise as a consequence of mode changes. TS defined ACTIONS that require plant shutdown (e.g. entry into Mode 5) offset the risk associated with continued plant operation and repairing the component (in this case, a CIV) while the plant remains at power. In the case of CIV repair, for most CIVs repairing an INOPERABLE CIV (unable to close) while the valve is in the OPEN position would incur a very small increment in LERF. On the other hand, the transition risk associated with a short duration increases the plant core damage probability (as well as LERP) in the process shutting down the plant. Section 6.3.2 addresses only the incremental risks associated with continuing plant operation during repair of a CIV place in a position so as not to satisfy TS 3.6.3.

g. The fault exposure time for the valves in this configuration is equivalent to time that the plant operates in its non-cold shutdown modes. For this configuration the fault exposure time is assumed to be one year.

h. A pressure transmitter is located upstream of the SI check valve. The effect of the transmitter is that a leaking (or stuck open) SI check valve would be detected followed by appropriate corrective action(s).

With the inoperable CIV inside the containment secured in the open position, there is one less barrier available to protect the low pressure piping from being exposed to high RCS pressure. The reduction in the number of barriers has the potential for impacting both CDF and LERF due to ISLOCA. The potential impact was assessed by estimating the ICCDP/ICLERP for this configuration of Class B penetrations.

The methodology described in Reference 13 was used to estimate the frequency for ISLOCA. By securing the CIV open, the configuration becomes a "three series valve system" to guard against an ISLOCA. No attempt was made in this report to develop the ISLOCA frequency expression for this system. Rather, the expressions already developed in Reference 13 were used, and the appropriate values were substituted in order to estimate the ISLOCA frequency. The expression for the average frequency of coincident failure of the SI check valve, the AOV, and the manually operated valve over time period T is as follows:

$$ISLOCA = \frac{\lambda_1 \lambda_2 \lambda_3 T^2}{3} + \lambda_1 \lambda_2 \lambda_{d3} T \left[\frac{d_3 T + 1}{2}\right] + \lambda_1 \lambda_{d2} \lambda_3 T \left[\frac{d_2 T + 1}{2}\right] + 2 \lambda_1 \lambda_{d2} \lambda_{d3} \left[\frac{d_2 T + 1}{2}\right]\left[\frac{d_3 T + 1}{2}\right] \tag{6-5}$$

where,

ISLOCA	=	Frequency of ISLOCA (per year)
λ_1	=	Random leakage rate of SI check valve [8.76E-4 per year - Assumption (f) above]
λ_2	=	Random leakage rate of AOV [7.00E-3 per year - Assumption (d) above]
λ_3	=	Random leakage rate of manually-operated valve [1.68E-3 per year - Assumption (b) above]
λ_{d2}	=	The probability of the AOV failing to reseat [1.55E-3 per demand - Assumption (d) above]
λ_{d3}	=	The probability of the manually-operated valve failing to reseat [3.88E-4 per demand - Assumption (b) above]
d_2	=	The number of times the AOV is operated [4 - Assumption (e) above]
d_3	=	The number of times the manually-operated valve is operated [4 - Assumption (c) above]
T	=	Fault exposure time [1 year - Assumption (g) above]

By crediting the pressure transmitter in the SI line, the terms in Equation 19 of Reference 13 involving failure of the SI check valve to reseat were eliminated because they are no longer applicable. The elimination of these terms is reflected in Equation 6-5. The first term on the right of Equation 6-5 represents random leakage of all three valves during the fault exposure time. The second term in the equation represents random leakage of the SI check valve and the

AOV concurrent with failure of the manually operated valve to reseat after opening. The third term in the equation represents random leakage of the SI check valve and the manually operated valve concurrent with failure of the AOV to reseat after opening. The fourth term represents random leakage of the SI check valve and failure of both the AOV and manually operated valves to reseat after opening.

Substituting the above values in Equation 6-5 yields:

ISLOCA = 2.17E-08 per year

Based on the above ISLOCA frequency, the incremental conditional core damage probability or incremental conditional large early release probability is estimated based on a 168 hours exposure (one AOT) as follows:

$$
\begin{aligned}
ICCDP = ICLERP &= ISLOCA \left[\frac{AOT}{8670}\right] \\
&= 2.17\,E-8 \left[\frac{168}{8760}\right] \\
&= 4.16\,E-10
\end{aligned}
$$

The calculated conditional probabilities indicate that the level of risk associated with the configuration for Class B penetrations due to the proposed CIV AOT extension is significantly lower than the acceptance criteria of 5.0E-7 and 5.0E-8 for ICCDP and ICLERP, respectively.

6.3.2.3.2 Penetrations Connected to the RCS Sample System

This generic configuration for Class B penetrations represents the containment penetrations with associated piping connected to the RCS and the sample system. This penetration is used to obtain samples from various locations in the RCS. Sampling of the RCS is performed on a daily basis during normal power operation. The piping outside the containment that is associated with the penetration is non-seismically qualified and are relatively small (i.e. less than 1" nominal diameter). Equipment is provided in the sample system for reducing the RCS temperature and pressure before the sample is processed. A typical schematic for this configuration is shown in Figure 6. As shown, the penetration is equipped with two CIVs for providing the isolation function. One CIV is located inside the containment and the other CIV is located outside the containment. Sampling of the RCS via this penetration is not required or needed in order to support or accomplish any of the safety function for core damage mitigation. Therefore, the associated CIVs are designed to close automatically following a design basis event. This is accomplished by the generation of CIAS. Closure of the CIVs also occurs automatically following the loss of motive or control power to the valve actuator.

c. The failure mechanism that causes the CIV to transfer open during the proposed AOT will also prevent it from closing when commanded by the safeguard signal following a design basis event.

d. A consequential pipe failure in the sample system due to the exposure to high RCS temperature and pressure is assumed to be negligible. Equipment is provided in the sample system for reducing the RCS temperature and pressure at normal power operation before processing the sample.

e. The nominal size of the sample line is less than one inch. The discharge of reactor coolant outside the containment via a break in the sample line can be mitigated by the charging system or the emergency core cooling system. Plant shutdown is assumed to occur before the inventory in the RWT (SIRWT) is depleted. The discharge of reactor coolant through the break will not lead to core damage by itself.

The inoperability of one of the CIVs may impact CDF. The inoperable CIV is secured in the open position, thus reducing the number of valves available for isolating reactor coolant through this penetration. The impact on CDF or LERF is assessed by estimating the incremental change in core damage and large early release probabilities due to the proposed CIV AOT extension. To assess the significance of the AOT extension, the discharge of reactor coolant via the penetration is postulated. The discharge of reactor coolant may occur as a result of a breach in the sample line outside containment concurrent with the "OPERABLE" CIV transferring open within the duration of the AOT. Since the size of the breach is very small (i.e. nominal pipe size is less than one inch), the plant response to this event would be equivalent to a very small LOCA, which can be mitigated by the ECCS and in some instances, the charging system. Failure to mitigate the event will eventually lead to core damage and the release of radioactive materials to the environment via this pathway. The following expression is therefore used to estimate the potential impact on CDF or LERF.

$$ICCDP = ICLERP = (CCDP)_{SL}\ F_P\ P_{FRC} \left[\frac{AOT}{8760}\right] \tag{6-6}$$

where,

ICCDP	=	the incremental conditional core damage probability
ICLERP	=	the incremental conditional large early release probability
$CCDP_{SL}$	=	the total conditional core damage probability given a small LOCA [3.75E-3 - Section 6.3.2.1(e)]
F_P	=	the frequency of a random pipe failure occurring in the sample system creates a small LOCA [5.0E-3 - Section 6.3.2.1 (l)]
P_{FRC}	=	the probability of the operable CIV failing to remain closed during the proposed AOT [2.3E-3 - Section 6.3.2.1 (k)]
AOT	=	the proposed allowed outage time [168 hours - Section 6.3.2.1(a)]

Substituting the above values in Equation 6-6 yields:

$$ICCDP = ICLERP = [3.75E\text{-}3] * [5.0E\text{-}3] * [2.3E\text{-}3] * [168 / 8760]$$

$$= 8.27E\text{-}10$$

Since the piping outside the containment in the sample system is non-seismically qualified, a failure in this section of piping is assumed following a seismic event. For a seismic event, the impact on ICCDP and ICLERP can be assessed by substituting the appropriate values in Equation 6-6.

This is accomplished by replacing the product of $CCDP_{SL}$ and F_P with the frequency of a seismic induced small LOCA. As indicated in Table 6.3-2, the CDF due to a seismic event at San Onofre was used as the bounding value in the calculations. Based on the information provided in Table 3.6-7 of the San Onofre IPEEE (Reference 19), the frequency of a seismic induced small LOCA is 1.49E-5 per year. After making the substitutions in Equation 6-6, the estimated incremental probability for both core damage and large early release is 6.57E-10.

The calculated conditional probabilities for both a seismic and non-seismic initiated event indicate that the level of risk due to the proposed CIV AOT extension is below the acceptance criterion of 5.0E-7 and 5.0E-8 for the incremental conditional probability of core damage and large early release, respectively.

6.3.2.3.3. Penetrations Connected to the Letdown or RCP Bleedoff Lines

This generic configuration for Class B penetrations represents the containment penetrations with associated piping connected to the RCS and the CVCS to provide letdown or bleedoff from the reactor coolant pumps. A small portion of reactor coolant is diverted to the CVCS for processing in order to remove suspended solids and impurities from the coolant. Bleedoff from the reactor coolant pumps is also diverted to the CVCS to minimize the amount of makeup required for the RCS. Continuous letdown and bleedoff flow is provided during normal power operation. The RCS temperature and pressure is reduced to prevent the relatively low pressure and temperature components of the CVCS from being exposed to normal operating temperature and pressure of the RCS. The nominal pipe size for the letdown line is two inches, which is much larger than the nominal pipe size for the bleedoff line (i.e. 3/4 of an inch). Isolation failure of the larger piping penetration is bounding and is assessed for this configuration. A typical schematic for this configuration is shown in Figure 7. As shown, the flow path is equipped with three valves. Two of the valves are located inside the containment, one upstream and the other downstream of the regenerative heat exchanger. Both valves provide a redundant means of providing inside containment isolation. The third valve is located outside the containment. These valves are normally open during normal power operation and may not be closed for an extended period without forcing a plant shutdown. Closure of any of these valves for an extended period will terminate letdown flow and force a plant shutdown. The valves are closed automatically by CIAS or SIAS following a design basis event to terminate the flow of reactor coolant outside the containment following the associated design basis events.

d. A break is assumed to occur in the piping located between the two valves inside the containment. The CIV immediately downstream of the regenerative heat exchanger is assumed to be inoperable and secured in the open position. The inoperable CIV is unavailable for isolating the containment penetration.

e. A breach in the letdown line outside the containment is assumed to occur downstream of the CIV located outside the containment. The breach may result from a random pipe failure or inadvertent opening of a relief valve during the proposed AOT. The mean failure rate for inadvertent opening of a relief valve is 2.13E-2 per year (or 2.43E-6 per hour) (Reference 10). When combined with the random frequency of a pipe failure, the overall frequency of breaching the letdown line outside the containment is 2.63E-2 per year.

f. The probability that both CIVs fail to close is dominated by common cause failure of these valves. The probability is estimated as the product of the demand failure probability and the common cause beta factor. The probability that the valve fails to close is 1.55E-3 [see item (a) above], and the beta factor is 0.1 (Reference 14) is assumed and used. This common cause beta factor is considered to be very conservative. The product of these two numbers yields a common cause probability of 1.55E-4.

The impact of a postulated break inside or outside the containment is assessed below.

Break Inside Containment

A pipe break that occurs between the two valves inside the containment will initiate a loss of reactor coolant and a plant response similar to a small LOCA event. The lost coolant collects in the containment sump and is available for long term heat removal. A break in this location can be mitigated by closing the upstream valve or by making up the lost reactor coolant via the ECCS. Failure to mitigate this event would eventually lead to core damage. The following expression is therefore used to estimate the incremental increase in core damage probability.

$$ICCDP = F_P \left(CCDP\right)_{SL} P_{FTC} \left[\frac{AOT}{8760}\right] \tag{6-7}$$

where,

ICCDP	=	the incremental conditional core damage probability
$CCDP_{SL}$	=	the total average core damage probability [3.75E-3 - Section 6.3.2.1(e)]
F_P	=	the frequency of a random pipe failure occurring in the letdown line [5.00E-3 per year - Section 6.3.2.1 (l)]
P_{FTC}	=	the probability of the operable CIV failing to close [1.55E-3 - Section 6.3.2.1 (k)]
AOT	=	the proposed allowed outage time [168 hours - Section 6.3.2.1(a)]

Substituting the above values in Equation 6-7 yields:

$$ICCDP = [5.0E\text{-}3] * [1.55E\text{-}3] * [3.75E\text{-}3] * [168 / 8760]$$

$$= 5.57E\text{-}10$$

The incremental increase in conditional core damage probability would also lead to an incremental increase in large early release probability. Since the CIV that is closest to the inside containment is assumed to be in the open position, the outside CIV is the only valve that is relied on for isolating the containment penetration. Other letdown valves (i.e. the letdown control valves) may be used to isolate the path. Credit for such valves is not included in the calculation. The following expression is used to bound the estimated probability for large early releases.

$$ICLERP = ICCDP\ P_{FTC}$$

$$= (5.57E\text{-}10)\ (1.55E\text{-}3)$$

$$= 8.63E\text{-}13$$

Break Outside Containment

A breach that occurs downstream of the CIV outside the containment will cause a loss of reactor coolant, and a plant response similar to a small LOCA event will be initiated. The lost coolant will not be available for long term RCS inventory control and heat removal. A breach in this location can be mitigated by closing the operable valves. Failure to mitigate this event will eventually lead to an ISLOCA. The following expression is used for estimating the ICCDP or ICLERP due to the proposed AOT for the CIVs.

$$ICCDP = ICLERP = F_P\ P_S \left[\frac{AOT}{8760}\right] \qquad (6\text{-}8)$$

where,

ICCDP	=	the incremental conditional core damage probability
ICLERP	=	the incremental conditional large early release probability
F_P	=	the frequency of breaching the letdown line outside the containment [2.63E-3 per year - Assumption (e) above]
P_S	=	the probability of both CIVs failing to close [1.55E-4 - Assumption (f) above]
AOT	=	the proposed allowed outage time [168 hours - Section 6.3.2.1(a)]

Substituting the above values in Equation 6-8 yields:

$$ICCDP = ICLERP = [2.63E\text{-}3] * [1.55E\text{-}4] * [168 / 8760]$$

$$= 7.82E\text{-}09$$

6.3.2.6 Risk Assessment of AOT Extension for Class E Containment Penetrations

A Class E containment penetration is designed to open during a design basis event. Consequently, the CIVs associated with Class E penetrations are required to open automatically or receive confirmatory signal to open by the safeguard actuation system (i.e. ESFAS or ESCS). Based on their functions, the following generic configurations of Class E penetrations were identified for the CE PWRs.

- Penetrations Used to support RCS Inventory Control Safety Function, or
- Penetrations Used to support Containment Heat Removal Safety Function.

The above generic configurations for Class E penetrations with an associated CIV secured in the open position are described in subsections 6.3.2.6.2.1 and 6.3.2.6.2.2.

Since the CIVs associated with Class E penetrations provide containment isolation and are also required to be open for accident mitigation, an inoperable CIV in either the open or closed position will have an impact on both CDF and LERF. An inoperable Class E CIV in the closed position will impact the ability of the associated system in performing its mitigating function. The intent of the risk assessment provided in this report is to evaluate the impact of extending the AOT or completion time for restoring an INOPERABLE CIV to operability for satisfying the containment isolation function. Additionally, qualitative assessment on risk impact is provided for securing an INOPERABLE Class E CIV in the closed position.

6.3.2.6.1 Risk Impact Associated with Retaining a Class E containment "boundary valve" in the Closed Position

This information is provided for purposes of completeness. This report is not requesting an extension of the AOT for the Class E valves to be in the closed position. This discussion does however support the ISTS general philosophy of associating the inoperability of these valves to open within the system AOT. Retaining an INOPERABLE Class E CIV for an associated containment piping penetration in the closed position may impact CDF and LERF. The magnitude of the impact depends on the associated system and the type of mitigating function it performs and the impact of the valve closure on the system mitigating capability. The impact of a closed CIV may be sufficient to cause the complete loss of a system train (i.e. closure of CIV in containment spray line) or may be minimal and have no significant effect on system operation (i.e. closure of CIV in HPSI or LPSI system). For example, San Onofre's analyses (Reference 18) of a single SI line valve in the closed position for the current LPSI AOT (3 days) indicate that the associated incremental CDPs is approximately 4.0E-9, with the incremental impact on LERP about two orders of magnitude lower.

6.3.2.6.2 Risk impact associated with retaining a Class E value in the open position:

6.3.2.6.2.1 Penetrations Used to support RCS Inventory Control Safety Functions

$$ISLP = ISLOCA\ P_C \left[\frac{AOT}{8760}\right] \tag{6-13}$$

where,

ISLP	=	The incremental conditional ISLOCA probability
ISLOCA	=	The ISLOCA frequency [8.76E-7 per year]
P_C	=	Conditional probability of pipe failure following exposure to RCS pressure [0.1 - Assumption (2) above]
AOT	=	The proposed allowed outage time [168 hours - Section 6.3.2.1(a)]

Substituting the above values in Equation 6-13 yields an incremental conditional ISLOCA probability of:

$$ISLP = 8.76E\text{-}7 * (0.1) * [168 / 8760]$$

$$= 1.68E\text{-}9$$

b. Charging Line

The charging line is connected directly to the RCS and is used to provide makeup to the RCS during normal power operation. Charging to the RCS is also normally provided during post-accident conditions, except when containment isolation is required. A typical schematic of the charging line penetration is shown in Figure 12. This schematic shows that the portion of the charging line associated with the containment piping penetration, which includes a CIV that is located outside the containment.

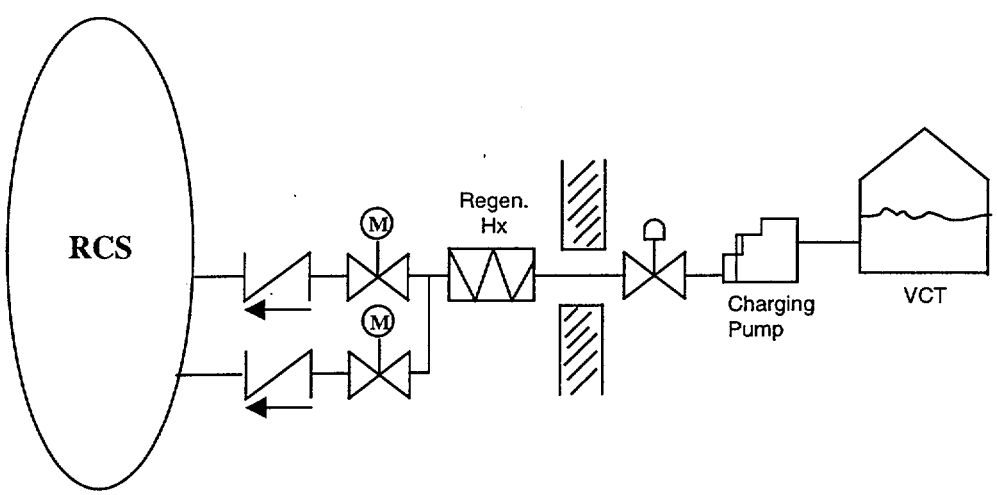

Figure 12

Schematic of Penetration Connected to Charging Line

Multiple diverse valves (i.e. motor-operated valve and check valve) are located inside the containment. Although not shown in the schematic, the charging line is equipped with additional valves between the charging pumps and the containment penetration. The charging line is designed to handle high pressure and is therefore not susceptible to a catastrophic failure if exposed to normal operating temperature and pressure of the RCS. The PSA credits charging flow with the associated CIV in the charging line in the open position. Securing the CIV in the charging line in the open position will have no impact on either CDF or LERF.

For the two cases considered for this configuration of Class E penetrations, the calculated incremental conditional probabilities for core damage and large early release indicate that the level of risk due to the proposed CIV AOT extension is well below the acceptance criteria of 5.0E-7 and 5.0E-8, respectively.

6.3.2.6.2.2 Penetrations Used for Containment Heat Removal

This type of Class E penetration is used to provide containment pressure control and containment heat removal. The Containment Spray System (CSS) and the Containment Cooling System (CCS) are used to perform these functions. The CSS is also used to remove radioactive particulate from the containment atmosphere. The penetrations associated with the CSS are connected directly to the containment atmosphere. Unlike the CSS, the penetrations associated with the CCS are connected to piping that form a closed loop system inside the containment. The CIVs installed in the penetrations for each system design is described below.

a. CSS Lines

The CSS is in the standby mode during normal power operation. The system is actuated automatically by the containment safeguard signal (i.e. CSAS) in order to perform its functions. A typical schematic of a CSS line penetration is shown in Figure 13. This schematic shows that two CIVs are installed in the line.

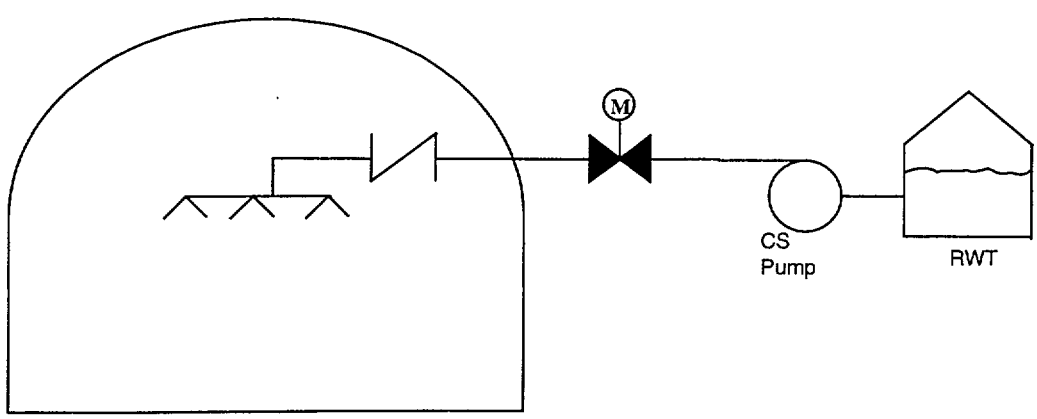

Figure 13
Schematic of Penetration Connected to Containment Spray Line

Table 6.3-3

Summary of Plant Risk for Proposed CIV AOT Extension

CTMT Pen. Class	Description	Seismic Effect on Piping N	Seismic Effect on Piping Y	Position of INOPERABLE CIV	Proposed AOT (Days)	ICCDP	ICLERP	ICCDP Risk Ratio (Note 7)	ICLERP Risk Ratio (Note 8)
A	CIVs in penetrations connected directly to containment atmosphere and outside environment	(Note 1)		OPEN	7	0	8.82E-9	0	**1.8E-1**
	CIVs in penetration connected directly to containment atmosphere and closed loop system outside containment	✓		OPEN	7	0	1.48E-12	0	2.96E-5
			✓	OPEN	7	0	1.29E-09	0	2.6E-2
	CIVs in penetrations connected to containment atmosphere and open loop system outside containment	✓		OPEN	7	0	5.83E-13	0	1.2E-5
			✓	OPEN	7	0	5.10E-10	0	1.0E-2
	CIVs in penetrations connected to closed loop system inside and outside containment	✓		OPEN	7	0	<1.00E-12	0	<2.0E-5
			✓	OPEN	7	0	1.29E-09	0	2.6E-2
B	CIVs in penetrations connected to SI Line check valve leakage path	(Note 2)		OPEN	7	4.16E-10	4.16E-10	8.3E-4	8.3E-3
	CIVs in penetrations connected to the RCS sample line	✓		OPEN	7	8.27E-10	8.27E-10	1.65E-3	1.65E-2
			✓	OPEN	7	6.57E-10	6.57E-10	1.31E-3	1.31E-2
	CIVs in penetrations connected to Letdown or RCP bleedoff line	(Note 2 & 3)		OPEN	7	7.82-09	7.82E-09	1.56E-2	1.56E-1
C	CIVs in penetrations connected to non-essential containment cooling units	(Note 4 & 5)		OPEN	7	3.07E-9	1.84E-12	6.1E-3	3.7E-5
	CIVs in penetrations connected to secondary side of steam generator	✓		OPEN	7	0	2.02E-10	0	4.0E-3
			✓	OPEN	7	0	Neg	0	Neg
D	CIVs in penetrations connected to containment atmosphere pressure detector	(Note 2)		OPEN		Neg	Neg	Neg	Neg
E	CIVs in penetrations used to support RCS Inventory Control Safety Function - safety injection	(Note 2)		OPEN	7	1.68E-9	1.68E-9	3.4E-3	3.4E-2
	CIVs in penetrations used to provide Charging	(Note 2)		OPEN (Note 9)		0	Neg	0	Neg
	CIVs in penetrations used to support Containment Heat Removal safety function using containment sprays	(Note 2)		OPEN	7	2.0E-8	5.83E-13	4.0E-2	1.2E-5
	CIVs in penetrations used to support Containment Heat Removal safety function using safety-related containment cooling units	(Note 2 & 6)		OPEN	7	2.0E-8	3.84E-10	4.0E-2	7.7E-3

Notes for Table 6.2.3.6:

1. The associated piping located downstream of the CIV outside CTMT is open to the environment. The associated plant risk for this penetration is not impacted by a seismic event.
2. Associated piping outside the containment is seismically qualified.
3. ICCDP is bounded by letdown pipe break outside the containment, ICLERP is bounded by letdown pipe break outside containment.
4. Associated piping inside the containment is seismically qualified.
5. ICCDP and ICLERP are bounded by pipe failure causing reactor trip.
6. ICLERP is bounded by penetration connected to an open loop cooling water system.
7. ICCDP risk ratio is defined as the ratio of the estimated ICCDP to RG 1.177 acceptance criteria of 5.0E-7.
8. ICLERP risk ratio is defined as the ratio of the estimated ICLERP to RG 1.177 acceptance criteria of 5.0E-8.
9. CIVs associated with the charging line penetration are open during Modes 1 through 4 and are required to remain open for post-accident operation.

15. CEOG, "Joint Applications Report for Modifications to the Containment Spray System, and Low Pressure Safety Injection Technical Specifications," CE NPSD-1045, February 1998.

16. CEOG Letter, (CEOG-99-082), "Response to Request for Additional Information Regarding CE NPSD-1045", from Ralph Phelps (CEOG) to Stewart L. Magruder (NRR), dated March 15, 1999.

17. Not used.

18. Letter, "Docket Nos. 50-361 and 50-362, Supplement 1 to Amendment Application Nos. 158 and 142, Containment Isolation Values Completion Time, San Onofre Nuclear Generating Station Units 2 and 3," from D.E. Nunn to U.S. Nuclear Regulatory Commission, dated April 6, 1998.

19. Letter, "Docket Nos. 50-361 and 50-362, Response to Generic Letter 88-20, Supplement 4, Individual Plant Examination of External Events (IPEEE)," from W.C. Marsh, Southern California Edison Company, dated December 15, 1995.