FRAMATOME
TECHNOLOGIES

September 5, 2000
FTI-00-2225

Document Control Desk
U. S. Nuclear Regulatory Commission
Washington, DC 20555-0001

Subject: Additional Information on Modeling Updates to Framatome Technologies' RELAP5-Based, Large Break LOCA Evaluation Models - BAW-10168 for Non-B&W-Designed, Recirculating Steam Generator Plants and BAW-10192 for B&W-Designed, Once-Through Steam Generator Plants

Gentlemen:

On February 29, 2000, Framatome Technologies submitted modeling updates on its large break LOCA evaluation models - BAW-10168P-A, Revision 3, December 1996 and BAW-10192P-A, Revision 0, June 1998. In discussions concerning the change in the determination of the hot assembly initial fuel temperature, the NRC staff indicated that it would be desirable if additional detail were provided on the calculation. The attachment includes such information for use in the NRC's review of our submittals.

The attachment is considered Non-Proprietary to Framatome Technologies. If you require additional information, please contact John Biller at 804/832-2600 or John Klingenfus at 804/832-3294.

Sincerely,

J. J. Kelly, Manager
B&W Owners Group Services

Attachment

| | | | |
|---|---|---|---|
| c: | S. N. Bailey | - | Nuclear Regulatory Commission |
| | L. Lois/NRC | - | Nuclear Regulatory Commission |
| | F. R. Orr/NRC | - | Nuclear Regulatory Commission |
| | J. R. Biller | - | Framatome Technologies/OF53 |
| | B. M. Dunn | - | Framatome Technologies/OF53 |
| | C. K. Nithianandan | - | Framatome Technologies/OF53 |
| | J. A. Klingenfus | - | Framatome Technologies/OF53 |
| | R. N. Edwards | - | Framatome Technologies/MD82 |
| | M. A. Schoppman | - | Framatome Technologies/MD82 |

T010

3315 Old Forest Road, P.O. Box 10935, Lynchburg, VA 24506-0935
Telephone: 804-832-3000 Fax: 804-832-3663
Internet: http://www.framatech.com

# Attachment

## Introduction

The representation of the hot fuel assemble under the Framatome LOCA evaluation models (EMs) is being refined to include better represent the cooling mechanisms acting at the hot spot. During conditions of moderate to high flows the representation of the vapor temperatures at the hot spot is being improved. Further, the adiabatic period during lower head/lower plenum refill is being replaced with an approximation of the convective and radiation heat transfer processes present during the phase. Separating the hot spot and the hot assembly, allowing heat transfer during the refill phase, and probabilistically distributing the initial fuel pellet temperatures achieve these changes.

One of the parameters that can be changed between the hot spot (the location that will eventually produce the peak cladding temperature (PCT)) and the hot assembly is the initial fuel temperature. The base uncertainty in TACO3 predictions (that applicable for exposures below 40 GWd/mtU) is obtained by benchmarking a large number of unrelated tests. There is no apparent dependency between the predicted to measured uncertainty values and particular code correlations or input parameters. (Above 40 GWd/mtU a dependency does exist and the addition of a bias is required.) Therefore, the base uncertainty applies at the pellet level and the actual to predicted temperature ratios for the fuel pellets in the immediate environment of the hot spot should be distributed according to the probability density function of the uncertainty of the prediction. For the hot spot, the initial fuel temperature should continue to be the temperature predicted by TACO3 plus the uncertainty needed to provide 95 % confidence that the modeled temperature overpredicts 95 % of the data. For TACO3, up to burnup exposures of 40 GWd/mtU, that means 111.5 % of the TACO3 prediction. For the hot assembly, however, the only requirement is that the fluid conditions, which provide cooling for the hot spot, are reasonably conservative.

If the hot pin and the remainder of the hot assembly are separated and the hot assembly fluid conditions used to cool the hot pin, the hot spot parameters can be separated from the determination of the coolant conditions. This is the refinement for the next applications of the Framatome EMs.

## Current Modeling Approach and Required Revision

Currently Framatome models the hot fuel assembly and hot pin as one entity. This necessitates treating the entire hot assembly with all of the conservatisms required to assure that the hot pin or hot spot is not under-predicted. The result is a significant overprediction of the severity of the environs of the hot spot. By separating the hot pin from the hot assembly it is possible to reduce the conservatisms imposed by the hot pin environs while maintaining a conservative solution.

Convective and radiative processes govern heat transfer from the hot spot. During accident phases with relative high flow, the convective processes are dominant and primary attention is required to determine the incoming flow, its characteristics, and the convective coefficient. During accident phases with no or very low core flow, radiation to the immediate environs of the hot spot will dominate the solution. At these times, the combined heat capacity of the environs along with the radiative coefficient must be considered to assure an appropriate solution. The separation of hot spot and hot assembly assures appropriate conservatism by modeling the hot assembly such that:

1. The coolant conditions within the immediate surroundings of the hot spot during flow periods are conservatively predicted using initial fuel pellet temperatures that are at approximately the 95%/95% one sided upper tolerance limit, and

2. During stagnant conditions, the heat removal achieved by the separated model is an underprediction of that which would occur via the combined radiative and convective processes.

Under the new model the hot pin will be a separate heat structure that shares a coolant channel with the hot fuel assembly heat structure. The hot fuel assembly is comprised of all fuel pins within the hot assembly except the hot fuel pin(s). The hot pin, as implied, is comprised of one fuel pin. In some applications, MOX or gadolinium, it is anticipated that there could be more than one hot pin heat structures. Because the effect of axial heat conduction between fuel pellets in a fuel pin is small; the entire hot pin is modeled with the initial fuel temperatures applicable to the hot spot without serious over-prediction of consequences. That allows the simulation of a continuum of possible positions along the hot pin for the hot spot with a single model and computer run. Therefore, for TACO3 based evaluations, 11.5 % is added to the predicted fuel temperature for all pellets in the hot pin when the hot pin exposure is less than 40 GWd/mtU.

The initial fuel temperature within the hot assembly pellets is determined by probabilistically distributing the fuel pellet temperature prediction uncertainty throughout the immediate environs of the hot pin and determining the conservative effective average uncertainty at a 95 % confidence level. This average uncertainty is then assigned to the entire hot assembly. The result is that the hot assembly evolves in a fashion representative of the hot pin environs. This creates an over-prediction of the average fuel temperatures within the hot assembly but a reasonable representation of the hot pin coolant condition when flow is present.

The coolant heat capacity, however, is that of the entire assembly at the elevation of the hot spot and substantially larger than the region of the assembly near the hot spot. If coolant is flowing and the rise in temperature along the length of the hot spot not significant, the oversized heat capacity is not an issue. During relatively stagnant periods, vessel refill, the cladding temperatures limit the increases in vapor temperatures and the vapor heat capacity is significant in determining the vapor energy absorption. However, under these conditions, radiative heat transfer to the hot spot environs dominates energy transport away from the hot spot. This transfer mechanism occurs to the coolant and directly to the surrounding fuel pins with the surrounding pins being the far more important heat sink. The use of the entire hot assembly vapor heat capacity and the RELAP5/MOD2-B&W steam heat transfer modeling allows less than one half of the energy flow from the hot spot then would result from radiation to surrounding pins. Therefore, so long as a true pin-to-pin radiation model is not incorporated into the EMs, the use of the hot assembly vapor as a heat sink for the hot spot during refill will be conservative.

## Demonstration of Fuel Temperature Distributions and Effects

To determine the appropriate fuel temperature distributions and assure a conservative prediction during refill, the following steps are required:

Fuel Temperature Distribution:

1. Determine the number and position of fuel pins and pellets, which effectively control the hot pin fluid conditions.

2. Determine a probability density function for the uncertainty of the TACO3 fuel temperature prediction.

3. Determine, with 95 % confidence, the average uncertainty for the fuel pins and pellets identified.

4. Combine this uncertainty with the hot spot uncertainty to obtain the appropriate uncertainty for the region of the hot assembly surrounding the hot spot.

Refill Heat Transfer Comparison:

1. Determine the view factors for radiative heat transfer between the hot pellet and the surrounding fuel pins/pellets.

2. Probabilistically distribute the fuel pellet initial temperature uncertainty within the significant view factor positions.

3. Determine the 95 % confidence limit for average fuel temperature uncertainty.

4. Compare the resultant radiative energy transport to the average energy removal from the hot spot with the refined model.

**Fuel Temperature Distribution - Based on Flow in Assembly**

**Determination of the number and position of fuel pellets that control the hot pin fluid conditions**

As discussed, the modeling approach will consist of a hot pin (hot spot), modeled as a separate heat structure surrounded by the remainder of the hot assembly. Because the FTI evaluation models (RELAP5) do not consider rod-to-rod radiative heat transfer, the coupling between the hot assembly and the hot spot is through the fluid conditions at which heat transfer takes place. Further, because the hot assembly heat structure and fluid nodes, not a sub-region of the hot assembly, will be used to provide the coolant conditions for the hot spot, the hot assembly must be modeled to achieve fluid conditions representative of those with which the hot spot will be cooled. Therefore, it is necessary to establish the region of the fuel assembly around the hot spot within which the heat transfer takes place. Only pins and pellets within this region can be expected to influence the fluid condition surrounding the hot spot sufficiently to warrant inclusion in the determination of those conditions.

The following diagram of fuel assembly lattice positions is useful:

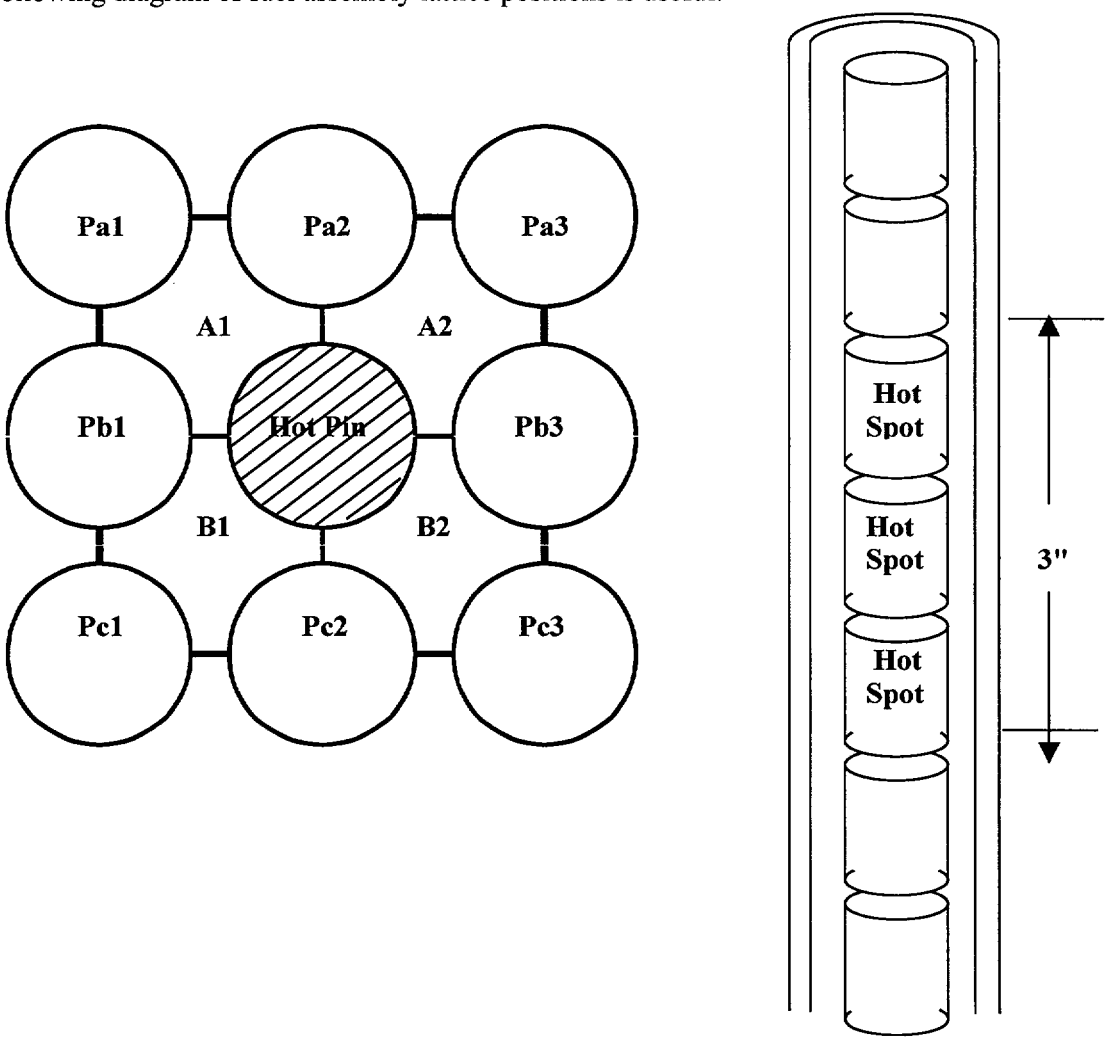


Considering the hot pin in the above drawing, the four fluid sub-channels A1, A2, B1, and B2

provide direct cooling. Realistically, the fluid sub-channels just removed from these four can be expected to mix well with the four and also be part of the cooling region. However, because expansion of the region would only lower the value of the resultant upper tolerance limit of the region uncertainty, the present calculation conservatively considers only the four sub-channels in contact with the hot pin. The pins that most govern the fluid conditions within these four sub-channels form a 9-pin array of the hot pin and its neighbors. Within the array the hot pin is fully involved, the laterally adjacent pins are only 1/2 exposed to the four flow sub-channels, and the diagonal pins only 1/4. Therefore, weighting factors, as given in the diagram below, have been assigned to the pins in determining the relative influence on the four fluid sub-channels.

| | | |
|---|---|---|
| 1/4 | 1/2 | 1/4 |
| 1/2 | | 1/2 |
| 1/4 | 1/2 | 1/4 |

Axially the cooling region will be limited to within a structural grid span which, for the purposes of this calculation, will be taken as approximately 1.5 feet (18 inches) in length. Further, only one half of that span plus one half of the length of the hot spot will be considered. This places the hot spot in the middle of the span that is a reasonable assumption and simplifies consideration of reverse flow situations. Theoretically the hot spot could be considered as having the height of one pellet (that in fact is done in establishing radiation cooling in the next section). However, a characteristic length of 3 inches, taken from the 10CFR50.46 Appendix K minimum rupture length definition, has frequently been applied within LOCA evaluations. Although 10CFR50.46 would probably not force a 3 inch height, such a length is not unreasonable. If the hot spot were not centered or if mid-span mixing grids (MSMGs) were incorporated, the hot spot would either see a larger number of pellets controlling the fluid temperature (high hot spot) or be closer to a mixer that would bring in coolant from other sub-channels (hot spot low, reverse flow hot spot high, or any MSMG application). In each case the effective mixing zone is increased, therefore, a half grid span mixing length, 10.5 inches (15/2 + 3), is acceptable or all hot spot positions and for MSMG assemblies.

The pellet height will be taken as 1/2 inch. Actual pellets vary in height from slightly greater than 0.4 inches to less than 0.5 inches. As will be shown in Section 4, the solution is not greatly affected by the actual length of the pellet and the approximation of a larger pellet height is reasonable and convenient. For the two grid span types considered, the following table provides the sets and weighting factors.

| | |
|---|---|
| Number of pellets within each pin in region | 21 |
| Number of pellets within the Hot Spot | 6 |
| Number of pellets in Hot Pin to be probabilistically distributed | 15 |
| Number of pellets in at weighting factor of 1 and maximum uncertainty (11.5%) | 6 |
| Number of statistical pellets at weighting factor of 1 | 15 |
| Number of statistical pellets at weighting factor of 1/2 | 84 |
| Number of statistical pellets at weighting factor of 1/4 | 84 |

Thus, the set for which the fuel temperature uncertainty is to be determined comprises 15 pellets at full weighting, 84 pellets at 1/2 weighting, 84 pellets at 1/2 weighting, and 6 pellets forced to the TACO3 11.5 % uncertainty.

A recognized conservatism of the approach is that the existence of control rod guide tubes and the instrument tubes is ignored. Only a few of the 9 pin sets within the assembly do not include an instrument tube or a guide tube and none would be free of the influence of one of these. However, no guide tube or instrument tube is included for the evaluation.

**Determination, with 95 % confidence, of the average uncertainty for the fuel pellets within the region surrounding the hot spot**

To determine the average uncertainty for the group of pellets presented in Section 2.1 an EXCEL Workbook was created to randomly determine the uncertainty of each pellet in accordance with the TACO3 uncertainty distribution. By collecting groups of 15, 84, and 84 such pellets, a single possible set of uncertainties for the surrounding region is determined. The average uncertainty of each set is then determined through application of the weighting factors and the result stored in an array. The process is repeated 50,000 times with the average uncertainty of each set added to the array to give a large number of samples. The array is then ordered and the uncertainty values at selected percentage positions within the array reported. The value at the 95 % position is the uncertainty that bounds 95 % of the results and will be used to determine the average fuel temperature for the environs of the hot spot.

The result for the pellet distribution selection is that approximately 95 percent of the time the average uncertainty for fuel pellets in the environs surrounding the hot spot will be bounded by an uncertainty of 1.4 % including the TACO3 .5 % bias.

**Combination of surrounding pellet uncertainty with the hot spot 95 percent uncertainty (Gives the appropriate uncertainty for the hot spot/hot pin region)**

The average uncertainty for the pellets in the region surrounding the hot spot was determined to be 1.4 percent. However, the region which determines the coolant properties by which the hot spot is cooled should also include the hot spot. These pellets will be considered to be at the upper 95%/95% tolerance level (11.5 %) for the TACO3 measured to predicted ratio. Combining these uncertainties and averaging gives a hot spot region initial fuel temperature uncertainty of:

$$\boxed{Hot \quad Spot \quad \mathrm{Re}\,gion \quad FTU = \left[\frac{6 \bullet 1.115 + 78 \bullet 1.014}{84}\right] = 1.021}$$

Thus, if the entire hot fuel assembly is initialized with an uncertainty of 2.1 percent, the fluid conditions, to the extent that they are influenced by the fuel pin thermal response, will be representative of the region immediately surrounding the hot spot during LOCA phases wherein flow induced cooling is significant (blowdown and reflood).

**Refill Heat Transfer Comparison - Very Low Flow Conditions**

For the proposed model, the hot pin and the hot assembly will be simulated at the same normalized power. Because both regions are cooled by the same coolant, the only difference between these regions then is comprised of the initial fuel temperature. From experience the difference in fuel temperatures during refill between pins initialized at different temperatures is about half the initial difference. A similar difference can be expected across the fuel pellet to its outer surface and within the cladding. Therefore, an approximate evaluation of the amount of energy transport possible by radiant heat transfer can be made based on the initial fuel temperatures for pellets within a region.

The first step in specifying the radiative heat transfer is to determine to what pins and pellets radiative heat transfer can take place and the relative importance of each. The next step is to probabilistically distribute pellets to these locations, generate a large number of possible distributions and compute the average effective fuel temperature uncertainty. The final step is to use the expected temperature differences in the radiative heat transfer model to compute a representative energy transport.

**Determine the view factors for radiative heat transfer between the hot pellet and the surrounding fuel pins/pellets**

An examination of the earlier diagram shows that direct radiative heat transfer from the hot pin can only take place to the pins in the immediate surrounding ring and selected pins of the next outer ring. Within the half quadrant formed by the hot pin (Pb2), Pb3 and Pa3, only a small widow is available to pass radiant energy on to the next outer most pin lattice. Pa4 will intercept radiation passing through this window. Thus, it is only necessary to evaluate view factors for the pins at lattice points Pa3, Pb3, and Pa4 and apply symmetry around the hot pin. The following diagrams show the planner view angles occupied by each of these lattice points for both the Mark-B (15x15) assembly and the Mark-BW (17x17) assemblies. Although representative dimensions have been used, the dimensions do vary slightly within the design covered. However, as can be seen there is negligible difference between the view factors of the 15x15 and 17x17 assemblies and no significant difference is expected for the small dimensional changes possible from on design to another.

Using the Mark-BW assembly as the base, the three pins occupy the following view angles from the center of the hot pin within the half quadrant: the adjacent pin occupies 22.4°, the diagonal pin in the close ring 15.4°, and the diagonal pin in the far ring 7.2°. From these angles and the distance of the pin from the center of the hot spot, the base of the area occluded by a pin segment can be calculated. When the base is combined with the height of a pin segment and the resultant area projected to a sphere, the fraction of sphere area or the solid angle occupied by a given segment can be calculated. This sphere fraction or solid angle gives the relative importance of the segment within the radiative process.

To facilitate the calculations an occlusion factor defined as the portion of the pin seen by the hot spot is defined for each pin position. For the adjacent and the diagonal pins the factor is 1. For the diagonal pin in the far ring the factor is 7.2/(36.2-16.9) = 0.373.

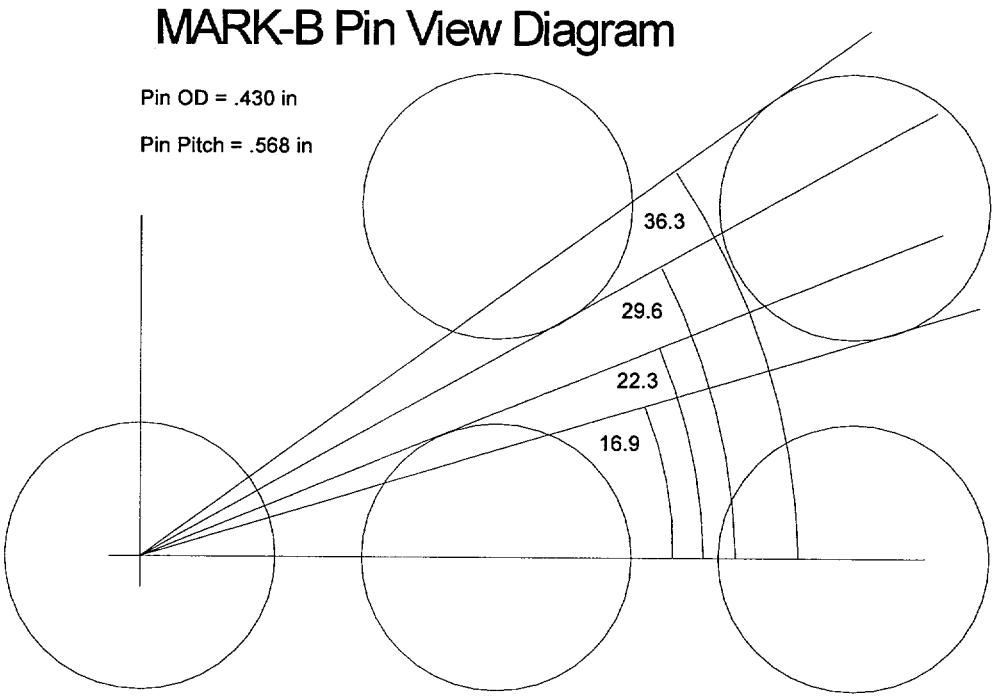


Dimensions from Reference 8, pages 5 and 11.

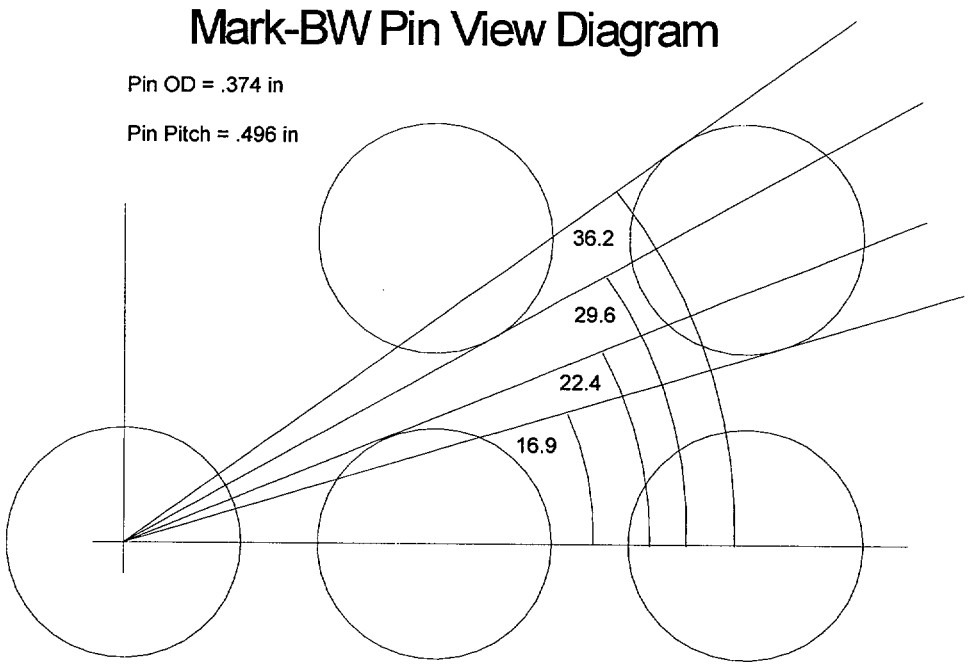


Dimensions from Reference 9, page 24.

The pin segments considered are one pellet in height because the fuel temperature uncertainty is assigned pellet by pellet. For convenience the pellet height is taken as 0.5 inches. Actual heights range between 0.4 and 0.5 inches. Using 0.5 minimizes the number of pellet segments to consider and increases, just slightly, the average uncertainty of the resulting sets. The height of each segment can be determined from the following diagram.

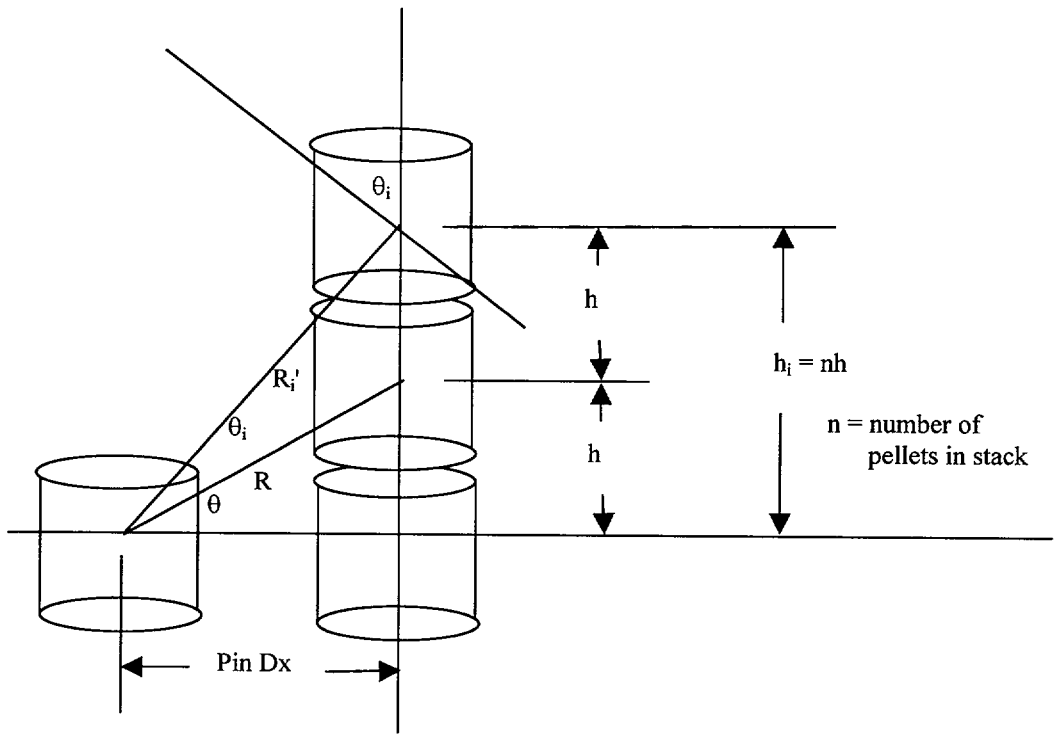


For radiation heat transfer, the pellet stacks run above and below the hot spot location because there is no preferential radiation direction. For the evaluation only one pellet is considered and the view areas or factor are evaluated as if radiation emitted from the center of that pellet. A more accurate determination would involve integration over the surface of the initiating pellet or pellets and, because the energy will be transported uniformly to the surface of the hot pin, not alter the results beyond the margins achieved. The area of sink is taken at the center line of each pellet and then projected onto a sphere at that radius. The solid angle or sphere surface fraction is computed from the projected area and a sphere area at the calculated radius (actually the calculation takes credit for symmetry and works on a hemisphere).

$R_i = (\text{Pin Dx}^2 + h_i^2)^{0.5}$

$\cos \theta_i = \text{Pin Dx}/R_i$

Area of Segment = h • Pin Diameter

Projected Area seen by the hot spot @ $R_i$ = Cos $\theta_i$ • Area of Segment • Occlusion Factor

Sphere Area @ $R_i = 4 \bullet \pi \bullet R_i^2$

Fraction of Sphere @ $R_i$ = Relative View Factor = Projected Area @ $R_i$ / Sphere Area @ $R_i$

This development has been placed in the XL workbook. Each of the 3 pin positions are evaluated separately and then combined in a summary sheet. The summary sheet also contains the grouping and averaging of the number of segments and their individual importance factors into 8 groups. Two of these groups have no members for the configurations studied herein and the group with the lowest importance is arbitrarily assigned a 0.0 average importance.

Applicability to Other Hot Spot Locations and to MSMG Designs

The evaluation performed places the hot spot in the middle of a normal grid span. If the hot spot is located above or the mid-plane of a grid span or if MSMGs were present the view of some of the fuel locations credited in this evaluation would be occluded by the closer grid or the MSMG. As will be shown only the very close neighbor pin positions are significant in determining the radiation heat transfer. Therefore, even if these locations were removed from the evaluation the result would not change appreciably. Further, the view would still be present except that it would now be occupied by an unheated structure, some kind of grid. This would undoubtedly result in an effective increase in radiative heat transport. Therefore, the central position is acceptable for the demonstration for all hot spot positions or for application to an MSMG design.

**Probabilistically distribute the fuel pellet initial temperature uncertainty within the significant view factor positions**

The relative importance for the pin segments that receive radiation form the hot pellet are:

| Group | Number of Pin Segments/Pellets | Relative Importance |
|---|---|---|
| 1 | 4 | .0605 |
| 2 | 12 | .0242 |
| 3 | 8 | .0163 |
| 4 | 24 | .0052 |
| 5 | 24 | .0030 |

The group numbers have been revised to be consecutive. These groups are now assigned fuel temperature uncertainties randomly in accordance with the TACO3 uncertainty distribution to achieve a 95 % confidence limit the set average uncertainty. The pin segments that will receive radiation from the hot spot are evaluated and the hot spot is not a member of that group. Using the above table for input and setting the forced (hot spot) pellets to 0, the 95 % confidence level for the set average is 2.5 % fuel temperature uncertainty.

For the evaluations conducted herein, the fuel temperature uncertainty for all receptor regions will be considered

2.5 % (note that in the LOCA calculations a 3 % uncertainty is used for conservatism.)

Note should be made that some of the possible receptors, 520 of them, are not included. These receptors, however, have a low average uncertainty and if included would only decrease the uncertainty. Also the evaluation conducted is only for one pellet as the source while the hot spot is treated as 6 pellets. Each of these 6 will have a replication of the sink evaluated here in and

thus the same uncertainty result can be applied.

**Compare the resultant radiative energy transport to the average energy removal from the hot spot with the revised model**

To demonstrate that the model as implemented achieves a conservative solution during refill the heat flux actually achieved for a representative calculation is herein compared to that which would have been achieved with radiation heat transfer.

The following is a simplified equations for radiant heat transfer.

$$q = 0.172 \bullet A \bullet \left[ \left( \frac{T_s}{100} \right)^4 - \left( \frac{T_r}{100} \right)^4 \right] \bullet e \bullet F_a \qquad \text{and}$$

$$e = \frac{1}{1/e_s + 1/e_r - 1} \qquad ;$$

where

| | | |
|---|---|---|
| q | = heat flow from interior object, Btu/hr | |
| A | = Area of source for an enclosed body | |
| $T_s$ | = Source temperature, R | |
| $T_r$ | = receptor temperature, R | |
| $e_s$ | = emissivity of source | |
| $e_r$ | = emissivity of receptor | |
| $F_a$ | = Geometric factor | = 1 for enclosed bodies |

Within the core $e_s = e_r \approx 0.7\ e = 0.54$.

As in the determination of importance, we will assume a pellet height of 0.5 in, but because the reference run to which we will compare heat exchange is for a 15x15 design we will use the Mark-B pin diameter of 0.43 in.

The area of source "A" is therefore becomes 0.675 $in^2$ or 0.00469 $ft^2$.

The following calculation was conducted with the proposed RELAP5 standalone hot pin model transferring energy to a hot bundle controlled fluid channel. The fuel temperature initialization of the hot bundle included 3 % uncertainty. The following figures provide the hot pin temperature and heat flux extracted from case "FDAF WJGF" at the position of the peak cladding temperature, level 6. Refill for this case was between 22 and 27.5 seconds.

Figures from "refill_radiation.xls"

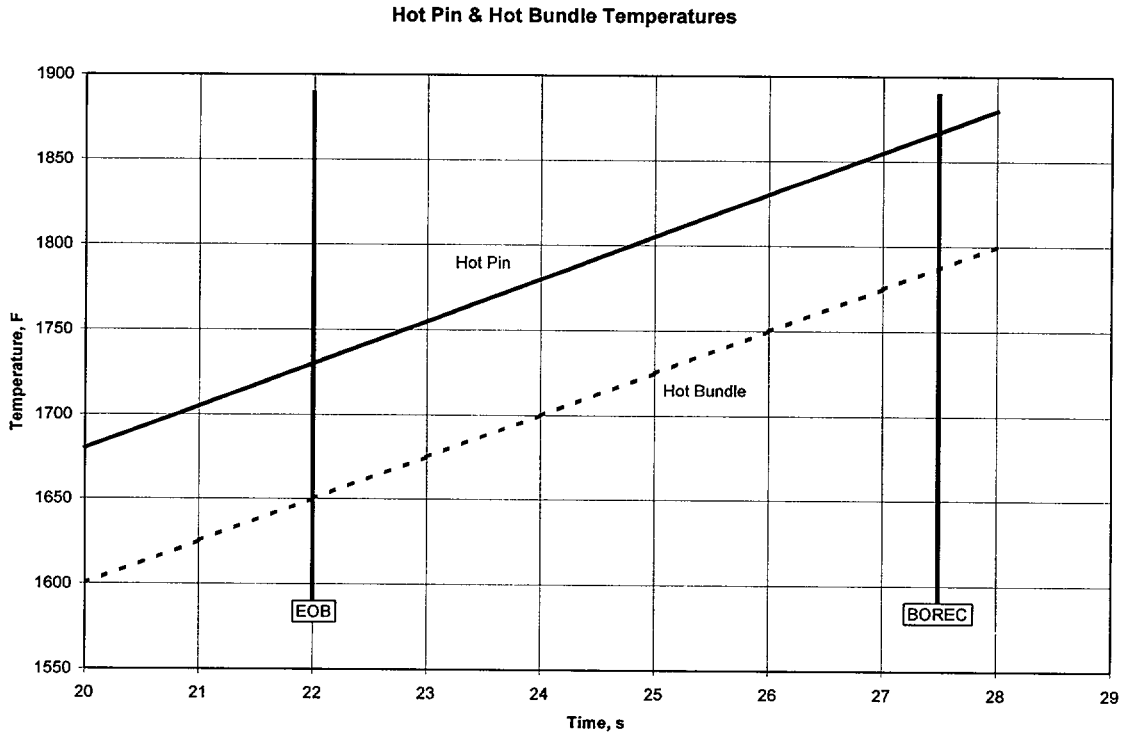


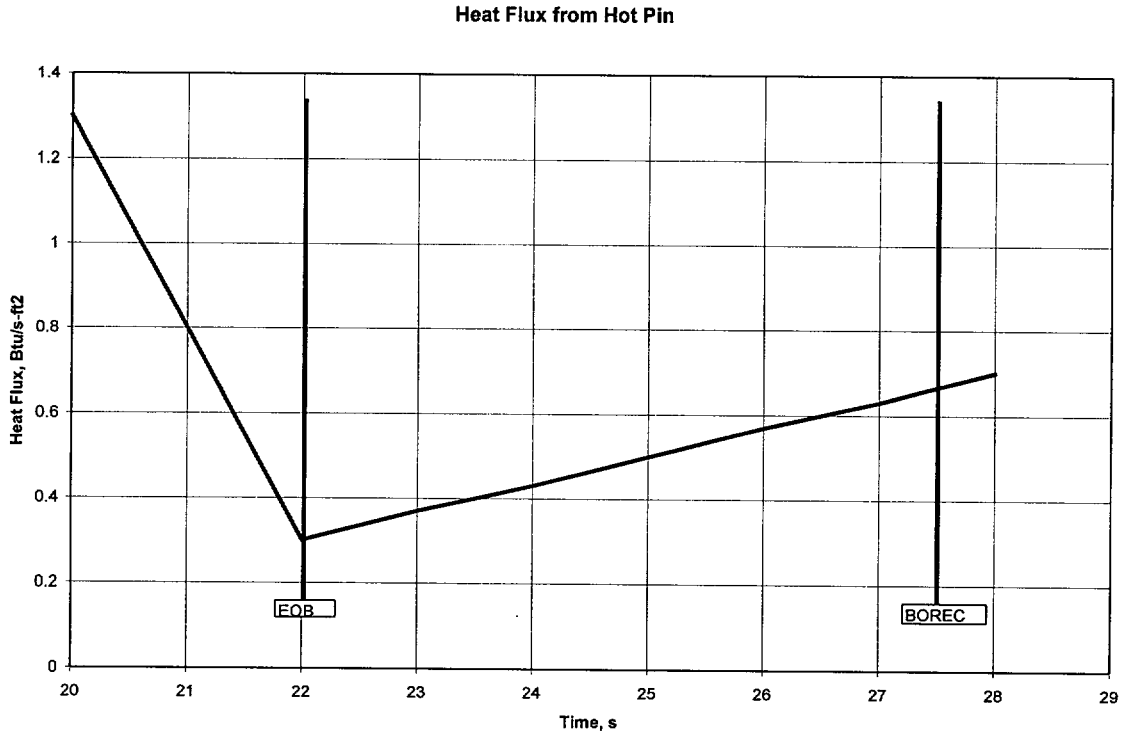

From this data and the prior equations a workbook comparing the heat flow achieved during refill and that which would have been possible with a radiation heat transfer model was constructed. The output shows that heat fluxes achieved were conservative by a factor of 2 during refill.

radiation.xls Jennings worksheet

Radiation Heat Transfer Calculation

The data in columns a, b, d, l is from 32-5003556-00

Data Source

| | |
|---|---|
| Tsource | Simplified characterization of hot bundle temperature transient on page 217 of 32-5003556-00 |
| Tsink | Simplified characterization of hot rod temperature transient on page 207 of 32-5003556-00 |
| Heat Flux | Simplified characterization of heat flux transient taken from plot of FDAFWJGF in 32-5003556-00 |
| | This plot is not recorded in 32-5003556-02 and is therefore reproduced herein as Figure 2 |

| | | | | | | | |
|---|---|---|---|---|---|---|---|
| Length of Source | 0.5 | in | Diameter of Source | 0.43 | in | Fa | 1 |
| Area of Source | 0.675 | $in^2$ | | 0.00469 | $ft^2$ | EOB | 22 s |
| Emissivity | 0.7 | | Effective Emissivity | 0.538 | | BOCR | 27.5 s |

| Time | Tsource, $T_s$ | | Tsink, $T_r$ | | $(T_s/100)^4$ -$(Tr/100)^4$ | Radiation Qr | Qr | Model Heat Flux | Q | Ratio Model/Radiation |
|---|---|---|---|---|---|---|---|---|---|---|
| s | F | R | F | R | | Btu/Hr | Btu/s | Btu/s-$ft^2$ | | |
| 20 | 1680 | 2140 | 1600 | 2060 | 29646 | 12.9 | 0.00358 | 1.3 | 0.00610 | 1.704501 |
| 21 | 1705 | 2165 | 1625 | 2085 | 30717 | 13.3 | 0.00371 | 0.8 | 0.00375 | 1.012345 |
| 22 | 1730 | 2190 | 1650 | 2110 | 31814 | 13.8 | 0.00384 | 0.3 | 0.00141 | 0.366543 |
| 23 | 1755 | 2215 | 1675 | 2135 | 32936 | 14.3 | 0.00397 | 0.37 | 0.00174 | 0.436663 |
| 24 | 1780 | 2240 | 1700 | 2160 | 34085 | 14.8 | 0.00411 | 0.43 | 0.00202 | 0.490373 |
| 25 | 1805 | 2265 | 1725 | 2185 | 35260 | 15.3 | 0.00425 | 0.5 | 0.00235 | 0.5512 |
| 26 | 1830 | 2290 | 1750 | 2210 | 36462 | 15.8 | 0.00440 | 0.57 | 0.00267 | 0.607658 |
| 27 | 1855 | 2315 | 1775 | 2235 | 37690 | 16.4 | 0.00455 | 0.63 | 0.00296 | 0.649728 |
| 28 | 1880 | 2340 | 1800 | 2260 | 38946 | 16.9 | 0.00470 | 0.7 | 0.00328 | 0.698639 |

Average Net Hot Pellet Loss During Refill 22 - 27 s 0.004188

| | | | | | |
|---|---|---|---|---|---|
| Plant Power | 2772 | MWT | Plant | 2627856.0 | Btu/s |
| Relative Power EOB | 0.05 | | @ EOB | 131392.8 | Btu/s |
| # of FA | 177 | | per FA | 742.3 | Btu/s |
| # of pins/FA | 208 | | per pin | 3.568905 | Btu/s |
| Length of each pin | 12 | | | | |
| # of segments in pin | 288 | | per segment | 0.012392 | Btu/s |
| Local Peaking | 2.5 | | peak segment | 0.030980 | Btu/s |
| Average Heat to sink | 0.004188 | | Average heat to sink | 0.00419 | Btu/s |
| # sink pellets/source | 3 | | To each sink pellet | 0.00140 | |
| Ratio Radiation heat to generated heat | | | | 0.045 | |

One item of concern is the effect that the real, radiative, heat flux would have on the temperatures of the hot bundle pins if the transfer actually took place. This would only be a concern if the radiation heat load was significant relative to other heat loads. At the bottom of the worksheet a comparison between radiation heat load on the sink pins to decay heat energy is made. This comparison shows that the radiation load is only about 5 % of the decay heat and from the model half of that 5 % was present. Therefore, the comparison is valid and the use of the standalone hot pin model is a conservative approximation of the heat transfer to be expected from the hot spot during the refill or other low flow periods.

Hot Rod Hot Spot Heat Flux from FDAFWJGF.

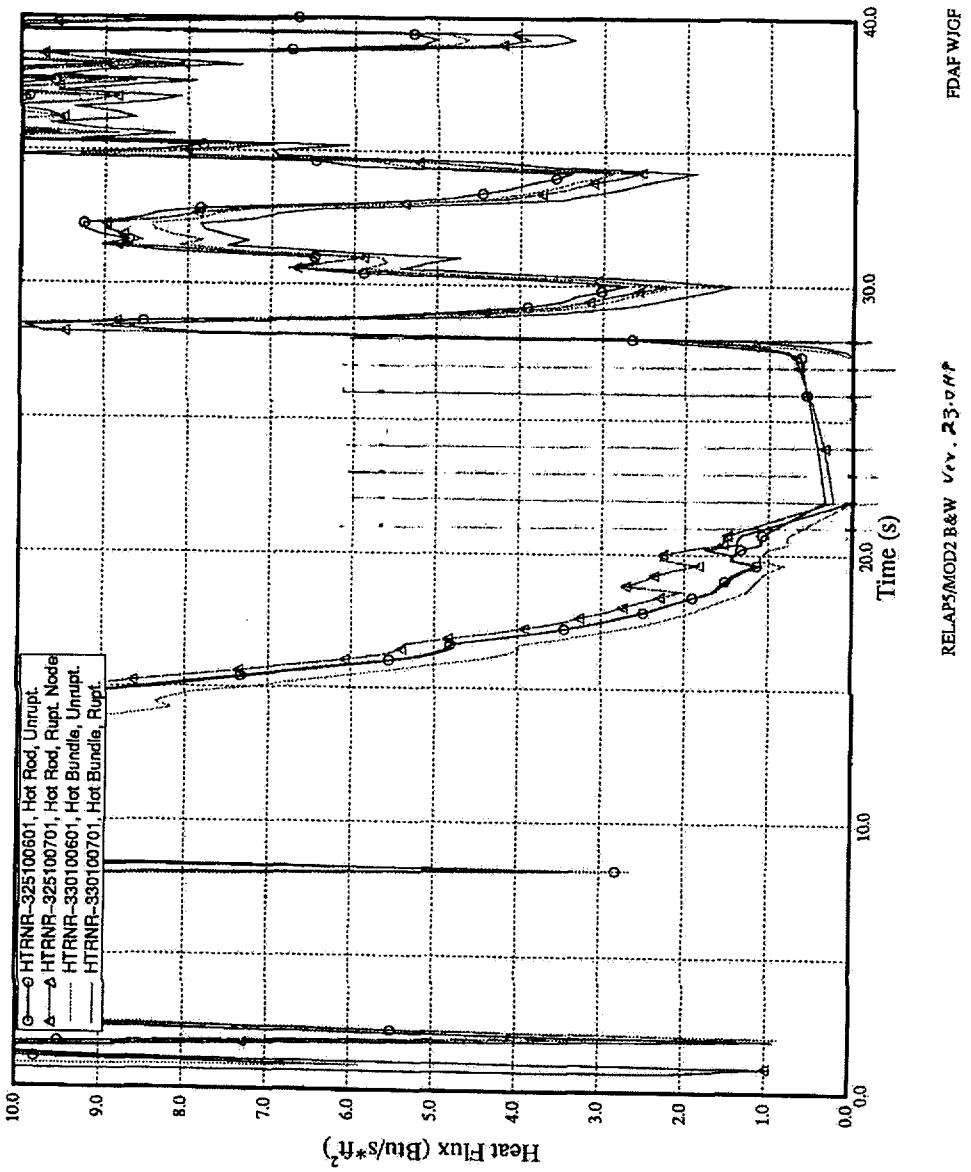

**Conclusions**

The FTI LOCA evaluation models are being upgraded to use a two region approach to determination of the heat transfer processes around the hot spot. The hot bundle is modeled as a heat structure with an associated coolant channel. The hot pin is modeled as a separate heat structure that uses the hot bundle coolant channel as its heat sink. This allows a more accurate determination of the coolant conditions for the hot pin. This calculation was to determine what the appropriate fuel temperature uncertainty was for the initialization of the hot bundle fuel. The method was to randomly distribute the fuel temperature uncertainty within the effective regions of the hot bundle according to the uncertainty distribution curve for the fuel temperature prediction, TACO3 code. 50,000 sets of such distributions were generated and sorted in order. The final distribution used was that which bounded 95 % of those sets. This provides assurance that the fluid temperatures achieved in the hot bundle are appropriately conservative for the evaluation of peak cladding temperature as far as the initialization of fuel temperature is concerned.

Heat transfer from the hot spot is governed by either convective transfer or radiant transfer during the course of an accident.

For convective heat transfer conditions a fuel temperature uncertainty of 2.1% for the hot bundle initialization is appropriate.

For radiative heat transfer a fuel temperature uncertainty of 2.5% for the hot bundle initialization is appropriate.

For pin average burnups below 40 GWd/mtU, the proposed model will use an uncertainty of 3 % to initialize the fuel temperature in the hot bundle and is therefore conservative beyond the 95 % level used to determine the appropriate values for initialization.

For pin average burnups greater than 40 GWd/mtU but less than 65 GWd/mtU, a bias will be added to both the hot pin and the hot bundle temperatures in accordance with the approval of TACO3 for those burnups.