1-NHY-650004

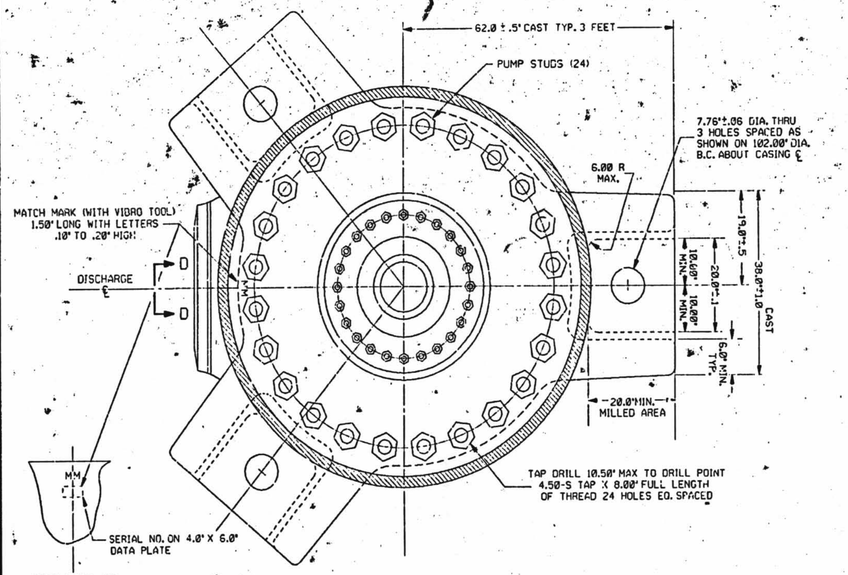

VIEW 'D-D'

SECTION 'A-A'

LOOP 1		LOOP 2		LOOP 3		LOOP 4	
RCP STUDS	SERIAL NUMBERS	RCP STUDS	SERIAL NUMBERS	RCP STUDS	SERIAL NUMBERS	RCP STUDS	SERIAL NUMBERS
	11736		12437		12445		11739
	11706		12401		12443		11696
	11734		12402		12393		11735
	11724		11537		12396		11745
	11719		11530		12392		11758
	11712		12408		12390		11690
	11726		12410		12446		11755
	11733		12413		12441		11740
	11728		12414		12438		11746
	11738		12389		12433		11692
	11727		11523		12432		11697
	11722		12400		12431		11748
	11730		12406		12434		11691
	11709		12435		12387		11750
	11743		12436		12440		11695
	12411		11534		12442		11708
	11516		12429		12391		11759
	11521		12430		12395		11694
	11535		12409		12397		11760
	11731		12407		12394		11754
	12385		12384		12439		11693
	12386		12365		12444		11732
	12427		11532		12388		11720
	11529		12399		12411		11713

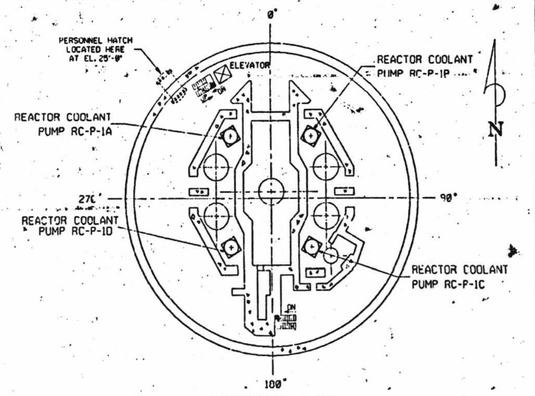

LOCATION PLAN

CONTAINMENT EL. 0'-0"

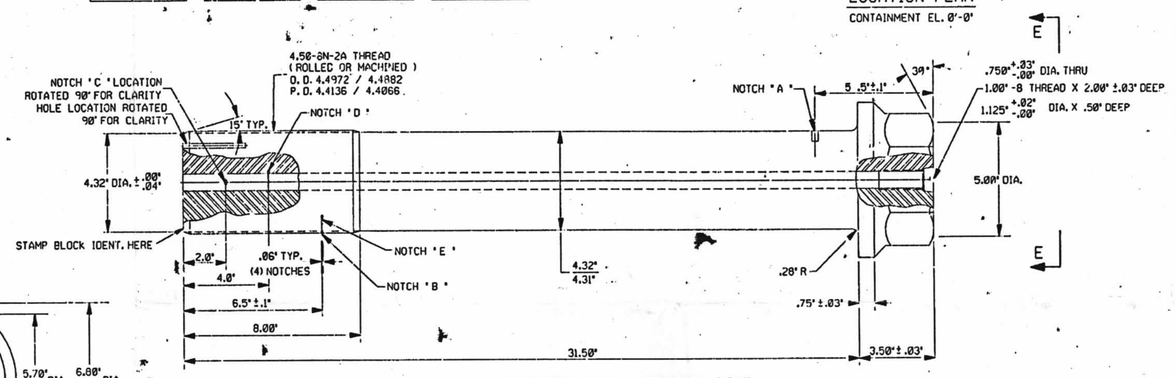

REACTOR COOLANT PUMP STUD

(NOTE: SHOWING U.T. CALIBRATION NOTCHES / HOLE LOCATIONS.)

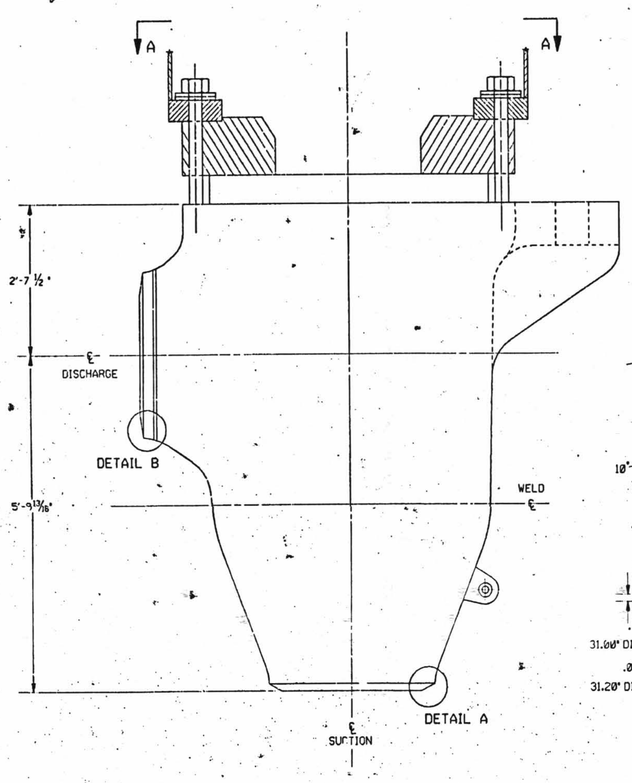

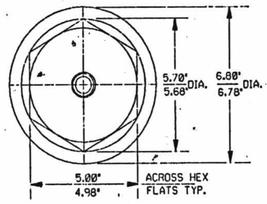

SECTION 'E - E'

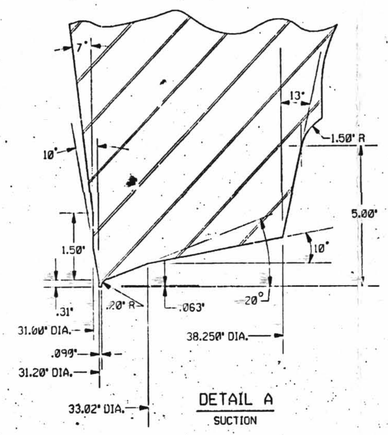

DETAIL A

SUCTION

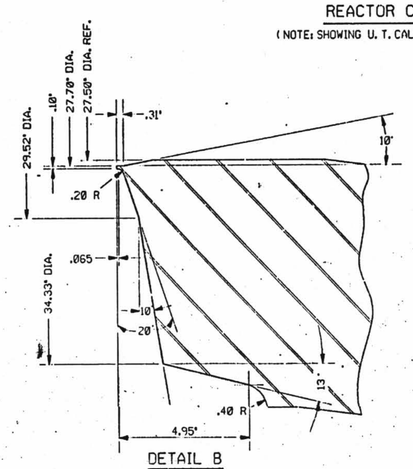

DETAIL B

DISCHARGE

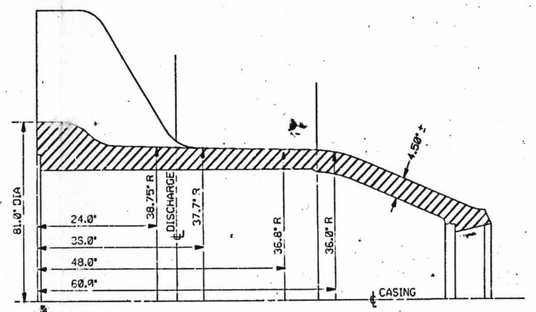

MAX. CONTOUR OF CASING FOR INSPECTION USE ONLY

FOR INFORMATION ONLY

NOTE:
1. DRAWING NOT TO SCALE
2. WESTINGHOUSE SHOP ORDER # NSS-125

REV	DATE	DSGN	DRWN	CHKD	CE	LDE	DESCRIPTION
0	7/14/79	HPW	JM	[illegible]	[illegible]	[illegible]	ORIGINAL ISSUE

New Hampshire Yankee

SEABROOK STATION

ISI EQUIPMENT WELDS
REACTOR COOLANT PUMP
RC-P-1A, 1B, 1C, 1D

1-NHY-650004

REF. DRAWING NO.	REV	TITLE
FP-50218 SHEET 1	19	OUTLINE-R.C. PUMP

D-5