Entergy

Entergy Nuclear Generation Co.
Pilgrim Nuclear Power Station
600 Rocky Hill Road
Plymouth, MA 02360

Mike Bellamy
Site Vice President

10CFR50.90

September 1, 2000
ENGC Ltr. 2.00.039

U.S. Nuclear Regulatory Commission
ATTN: Document Control Desk
Washington, D.C. 20555-0001

Docket No. 50-293
License No. DPR-35

REQUEST FOR TECHNICAL SPECIFICATION CHANGE
CONCERNING VESSEL MATERIAL SURVEILLANCE INTERVAL (CAPSULE PULL)

Purpose

Entergy Nuclear Generation Company (ENGC)- Pilgrim requests NRC review and approval for a change to Pilgrim Technical Specification Table 4.6-3. The proposed change substitutes "21 (approx)" under the column "Effective Full Power Years (EFPY)" for the current "18 (approx)." The attached "No Significant Hazards Considerations" evaluation is provided with the proposed change.

The current requirement of "18" EFPY was incorporated into Pilgrim's Technical Specifications by Amendment No. 182, effective July 15, 1999. Amendment No. 182 was developed in accordance with Regulatory Guide 1.99, Revision 2, *Radiation Embrittlement of Reactor Vessel Materials.* Pilgrim proposes changing Amendment No. 182 based on its fluence report (attached) and in conformance with the guidance provided in Regulatory Guide 1.99, Revision 2.

Pilgrim proposes this change because the second capsule withdrawal, currently scheduled for the next refueling outage (RFO No. 13), leaves only one surveillance capsule for future use. Pilgrim is pursuing an extension to its licensed operational period (Reference: Pilgrim letter to NRC dated January 7, 2000). A capsule withdrawal in accordance with the current schedule will not provide capsules for future use at the anticipated amended mid-life and end-of-life EFPYs. Operation in conformance with an operating regime developed from data from the first capsule ensures reactor vessel integrity.

A001

In addition, an industry effort was initiated to develop an integrated surveillance program (ISP) that would incorporate existing capsules along with supplemental capsules (reference: BWR Intergrated Surveillance Program Plan [BWRVIP-78]). The BWRVIP submitted the program plan to the NRC December 28, 1999. Pilgrim is a participant in the ISP. Pilgrim plans to defer its next capsule withdrawal, which is currently due during refueling outage 13 (scheduled to begin in April 2001), to take full advantage of this participation.

Background

Data from the first capsule pull (4.17 EFPY) indicates Pilgrim's pressure-temperature curves (Technical Specification Tables 3.6-1, 3.6-2, and 3.6-3) represent conservative values. Operating Pilgrim consistent with the regime defined by these curves provides assurance of reactor vessel integrity for the remainder of plant life. The attached information and "No Significant Hazards Considerations" are provided to demonstrate deferring Pilgrim's capsule withdrawal until 21 EFPY is justified and does not impact safe operation.

Please contact P.M. Kahler at (508) 830-7939 if you should require further information on this issue.

Sincerely,

Mike Bellamy

Commonwealth of Massachusetts)
County of Plymouth)

Then personally appeared before me, Mike Bellamy, who being duly sworn, did state that he is Site Vice President, Entergy Nuclear Generation Company and that he is duly authorized to execute and file the submittal contained herein in the name and on behalf of Entergy Nuclear Generation Company and that under the penalty of perjury the foregoing is true and correct.

My commission expires: Dec. 21, 2001
DATE

Judith M. Plummer
NOTARY PUBLIC

Attachments:

1) Narrative on Proposed Change and "No Significant Hazards Consideration"
2) Pilgrim Fluence Report
3) Proposed Changed Pilgrim Technical Specification Page 3/4.6-13
4) Marked-up Current Pilgrim Page 3/4.6-13

RMB/PMK/

cc: Mr. Alan B. Wang, Project Manager
Project Directorate I-3
Office of Nuclear Reactor Regulation
Mail Stop: OWFN 14B20
1 White Flint North
11855 Rockville Pike
Rockville, MD 20852

U.S. Nuclear Regulatory Commission
Region I
475 Allendale Road
King of Prussia, PA 19406

Senior Resident Inspector

Mr. Robert Hallisey
Radiation Control Program
Commonwealth of Massachusetts
Exec Offices of Health & Human Services
Dept. of Public Health
174 Portland Street
Boston, MA 02114

Mr. Steven Mc Grail, Director
Mass. Energy Management Agency
400 Worcester Road
P.O. Box 1496

ATTACHMENT 1 TO ENGC Ltr. 2.00.039

Description of Proposed Change

Pilgrim Nuclear Power Station (Pilgrim) Technical Specification Table 4.6-3, "Reactor Vessel Material Surveillance Program Withdrawal Schedule," currently gives the value of "18 (approx)" effective full power years (EFPY) for the second capsule withdrawal. Pilgrim proposes to change "18 (approx)" to "21 (approx)" EFPY for this capsule pull.

Reason for Proposed Change

Pilgrim proposes this change because, after the second capsule withdrawal (i.e., pull number 2), there is only one capsule left. ASTM E-185 requires that this final capsule must remain in the vessel until the end-of-life, currently listed as 32 EFPY on Table 4.6-3. Pilgrim is pursuing plant life-extension and withdrawing a capsule during RFO 13 would leave only one capsule for future use.

In addition, an industry effort, the BWR Vessel and Internals Project (BWRVIP), has developed an Integrated Surveillance Program (ISP) that would incorporate existing capsules along with supplemental capsules. Pilgrim is a participant in both the ISP and the Supplemental Surveillance Program (SSP). To comply with these programs, the BWRVIP requested nuclear plants, including Pilgrim, to defer the next capsule withdrawal if such withdrawal were imminent. Pilgrim's next capsule withdrawal is currently due during RFO 13, scheduled to begin in April 2001.

Safety Evaluation

Pilgrim meets the requirements of paragraph 50.55a and General Design Criteria 1, 14, 31 and 32 of Appendix A of 10 CFR Part 50 by providing assurance that material comprising the reactor coolant pressure boundary (RCPB) possess adequate fracture toughness properties to resist rapidly propagating failure and act in a non-brittle manner when stressed under operating, maintenance, testing, and anticipated operational conditions. The requirement, in part, of General Design Criterion 32 is met by conducting a surveillance program to monitor the change in fracture toughness properties of the ferritic materials in the reactor vessel.

The fracture toughness requirements for ferritic materials in the pressure retaining components of the RCPB are specified for testing and operational conditions, including anticipated operational occurrences, in Section IV of Appendix G of 10 CFR Part 50. Pressure-temperature calculation procedures are described in Appendix G of the ASME code while the detailed technical basis for the ASME code requirement is provided by the Welding Research Council (WRC) Bulletin 175, "PVRC Recommendation on Toughness Requirements for Ferritic Materials." Changes in the fracture toughness properties of materials in the beltline region, resulting from neutron irradiation and the thermal environment, are monitored by a surveillance program in compliance with the requirements of Appendix H of 10 CFR Part 50. The effect of neutron fluence on the shift in the nil ductility temperature of pressure vessel steel is predicted by Regulatory Guide 1.99, "Effect of Residual Elements on Predicted Radiation Damage to Reactor Vessel Materials." Pilgrim currently uses Regulatory Guide 1.99, Revision 2, in conformance with NRC guidance and an NRC Safety Evaluation Report (SER) dated July 15, 1999, for Amendment No. 182 to Pilgrim's Technical Specifications.

Technical Specification section 3/4.6.A, "Thermal and Pressurization Limitations," applies to the periodic examination and testing of the reactor pressure vessel. Table 4.6-3 is part of this section and provides a schedule of capsule pulls governed by EFPY.

Pilgrim withdrew its first capsule during the October 1979 refueling outage (RFO-4). Southwest Research Institute (SWRI) was contracted to test the capsules and provide a report based on the results of the testing (SWRI report 02-5951 dated July 1981) which established the reactor vessel fluence up to December 31, 1979. The results follow:

Location	Fluence	EFPY	ΔRT_{NDT}
Pressure Vessel I.D. Surface	2.6×10^{17} n/cm^2	4.17	27°F
(Projected to END-OF-LIFE)	2.0×10^{18} n/cm^2	32.0	78°F
Pressure Vessel @ 1/4 T Location	1.8×10^{17} n/cm^2	4.17	22°F
(Projected to END-OF-LIFE)	1.4×10^{18} n/cm^2	32.0	65°F

Pilgrim performed calculations and developed new reactor vessel P-T curves, based on extrapolation of the SWRI results. The new graphs were incorporated into Pilgrim's Technical Specifications via Amendment No. 82. These extrapolated values were subsequently found to be overly conservative and, in 1985, more realistic fluence calculations were performed by General Electric Company (GE) (Reference: GE report No. 277-1285, dated November 7, 1985) based on the DOT neutron transport methodology, the original SWRI data, and the core reload history through mid cycle number 7. The revised values are:

Location	Fluence	EFPY	ΔRT_{NDT}
Pressure Vessel I.D. Surface	4.24×10^{17} n/cm^2	8.08	36°F
Pressure Vessel @ 1/4 T Location	2.84×10^{17} n/cm^2	8.08	29 °F

In 1986, Boston Edison Company contracted Teledyne Engineering Services (TES) to develop new Technical Specification P-T limit curves for the reactor vessel. As part of this project, Pilgrim calculated new end-of-life fluences based on the previously referenced SWRI and GE reports. (Reference: Pilgrim calculation M-256). The new fluence values extrapolated to end-of-life are:

Location	Fluence	EFPY (END-OF-LIFE)	ΔRT_{NDT}
Pressure Vessel I.D. Surface	1.46×10^{18} n/cm^2	32	67°F
Pressure Vessel @ 1/4 T Location	0.98×10^{18} n/cm^2	32	56°F

To comply with the 10CFR50 Appendix H requirements for the second capsule withdrawal (i.e., next to last capsule), the capsule withdrawal time in terms of EFPY may occur when either the capsule accumulated neutron fluence corresponds to the approximate neutron fluence of the reactor vessel inner wall location (or 1.48×10^{18} n/cm^2) at end-of-life or 18 EFPY, whichever comes first (Reference:

ASTM E-185, Table 1, footnote b). Pilgrim's current EFPY is 16.3. A Technical Specification is required to defer the RFO 13 withdrawal; however, an exemption to 10CFR Appendix H is not required because, in accordance with 10 CFR Appendix H, Section III, B.1, Pilgrim uses a withdrawal schedule in compliance with ASTME 185-1966, which was current on the issue date of the ASME Code to which the reactor vessel was purchased.

Pilgrim's withdrawal schedule for the last capsule is not technically limited to 32 EFPY because the cumulative neutron fluence for the capsule at end-of-life will not reach the cumulative neutron fluence of the vessel inside surface prior to end-of-life. This statement is also true for the most limiting material, which is the RPV lower intermediate shell longitudinal seam welds 1-338 A,B,C.

There are other considerations justifying deferral of the second capsule withdrawal from RFO-13 to a later RFO:

- The BWRVIP in their January 21, 1999, memorandum recommended that nuclear plants scheduled for capsule withdrawal within the next 18 to 24 months postpone withdrawal.

- Withdrawing the next-to-last capsule during RFO-13 leaves no capsules for future evaluation except the last capsule that ASTM E-185 and Technical Specifications currently requires withdrawn at 32 EFPY. Therefore, the possibility of gaining future interim information from a capsule would be lost unless Pilgrim can defer withdrawal of the second capsule.

- The current data provided in Regulatory Guide 1.99, Revision 2, concerning the effects of long term radiation embrittlement and the overall affects of neutron exposure of reactor pressure vessel (RPV) metal and weld materials is still evolving for light water reactors (LWRs), and data base scatter is significant; hence, the need for the large 2σ variation to accommodate the scatter. As time progresses and technological advances on the effects of neutron exposure become available, a better understanding of these effects and more accurate predictions can be made. Therefore, deferring capsule withdrawal will allow Pilgrim to use advances in this technology. Also the data obtained from a capsule withdrawal would not be expected to provide a shift in the Charpy values larger than the current margin on scatter is evidenced in the shift calculated from the previous (initial) withdrawal.

- Pilgrim has maintained its inventory of previously-tested capsules at Southwest Research Institute. Technology is being developed allowing re-installation of new capsules made from these used specimens. The technology is not currently available, but it is reasonable to defer withdrawal at least one cycle to take advantage of any state-of-the-art development in this technological area. Such deferral does not impact safety because Regulatory Guide 1.99, Revision 2, and past specimen testing indicate Pilgrim's current P-T curves ensure safe operation of the plant.

- Pilgrim's reactor vessel history of accumulated fluence from initial startup to projected end-of-life (32 EFPY) is provided in attachment 2. This information shows that Pilgrim is not and is not expected to reach significant fluence values at the most limiting location (i.e., Weld 1-338 at the 1/4 T) prior to end-of-life. A significant fluence value is considered fluence greater than $1x10^{18}$ n/cm^2. Therefore the effect of radiation embrittlement is not a significant concern for the life of Pilgrim and is not a concern for the current estimated Cycle 13/14 operating history of 18-21 EFPY.

- The Pilgrim capsule weld material is not representative of the most limiting material in the Pilgrim RPV beltline weld material and does not represent any other limiting weld material in the domestic BWR fleet. Other than the dosimetry reading, the information gathered from the destructive test of another capsule would be of little value to Pilgrim. The capsule material listed in the ISP/SSP program that is representative of the Pilgrim limiting weld will provide data of more value.

Pilgrim is currently in the process of revising the existing vessel P-T limit curves to consider new information concerning the Pilgrim reactor vessel plate and weld material (chemical and physical property data) recently provided by the vessel manufacturer. The new P-T curves will more accurately reflect the effects of radiation embrittlement on the Pilgrim reactor vessel.

By letter dated May 16, 2000, Mr. J.R. Strosnider of NRC provided to the BWRVIP Committee three points to be addressed by licensees when developing capsule deferral requests. The following address these three points for Pilgrim:

- Explain how this deferral is consistent with the ISP plan submitted by the BWRVIP to the NRC on December 28, 1999.

Pilgrim is a member of the BWRVIP ISP and SSP efforts. Deferring the next scheduled capsule pull is consistent with those programs and with the BWRVIP January 21, 1999 memorandum to members. Deferral will not conflict with the current ISP proposal in that the testing of Pilgrim's second capsule at this time is not critical to achieving data of particular value to the ISP.

- Explain how the acquisition of materials property data in accordance with Pilgrim's Appendix H program is not necessary at this time to ensure that the integrity of the RPV will be maintained throughout the period of deferral.

This requested deferral is within Pilgrim's Appendix H program which is based on ASTM E-185-1966. Pilgrim's current pressure-temperature curves were developed using Regulatory Guide 1.99, Revision 2. The data obtained from the second capsule withdrawal is not expected to provide a shift in the Charpy values larger than the current margin because the margin due to data scatter bounds any anticipated shift from the actual testing.

- Explain how deferral of the acquisition of data from the capsule to be tested does not affect the validity of the RPV integrity assessments through the period of deferral.

Pilgrim analyzed its first capsule at 4.17 EFPY. Pilgrim's current P-T curves were provided in Technical Specification Amendment 140, which was effective January 29, 1992. Amendment 140 was based on Regulatory Guide 1.99, Revision 2, as required by Generic Letter 88-11, "NRC Position on Radiation Embrittlement of Reactor Vessel Materials and Its Effect on Plant Operations". Projected neutron fluence for the current P-T curves used the analytical results of General Electric Report MDE 277-1285, Revision 1. The curves, the methodologies, and the conservatism embedded within them were accepted by the NRC in Amendment 140.

These conservatisms will continue to ensure RPV material integrity throughout the period of deferral. The deferral of the second capsule pull at Pilgrim does not challenge safety but does defer a Technical Specification surveillance. Pilgrim's configuration and operational practices are not changed by this proposed change. Pilgrim's current Technical Specification P-T curves are not changed by this proposed change. The existing P-T curves were reviewed and approved by the NRC in Technical Specification Amendment No. 140 dated January 29,1992.

Operation in accordance with the existing P-T curves ensures reactor vessel and cooling system integrity. The capsule pull is a surveillance technique that provides data for modification of the curves. Since margins will not change without new data from the capsule pull, and since the methods used to develop the temperatures associated with these curves are regarded as conservative and currently reside in Pilgrim's Technical Specifications with NRC review and approval, operation of Pilgrim in accordance with the proposed change continues to be conservative and safe.

No Significant Hazards Considerations

The proposed amendment would change the reactor pressure vessel (RPV) surveillance capsule pull interval from approximately 18 effective full power (EFPY) years to approximately 21 EFPY in Pilgrim Technical Specification Table 4.6-3.

As required by 10 CFR 50.91(a), Pilgrim has provided its analysis of the issue of no significant hazards consideration, which is presented below:

- **The proposed changes do not involve a significant increase in the probability or consequences of an accident previously evaluated.**

Pressure-temperature (P/T) limits (Pilgrim Technical Specifications Figures 3.6.1, 3.6.2, and 3.6.3) are imposed on the reactor coolant system to ensure that adequate safety margins against nonductile or rapidly propagating failure exist during normal operation, anticipated operational occurrences, and system hydrostatic tests. The P/T limits are related to the nil-ductility reference temperature, RTndt, as described in *American Society of Mechanical Engineers [ASME] Section III, Appendix G.* Changes in the fracture toughness properties of RPV beltline materials, resulting from the neutron irradiation and the thermal environment, are monitored by a surveillance program in compliance with the requirements of 10 CFR Part 50, Appendix H. The effect of neutron fluence on the shift in the nil-ductility reference temperature of pressure vessel steel is predicted by methods given in *Regulatory Guide [RG] 1.99, Revision 2.*

Pilgrim's current P/T limits were established based on adjusted reference temperatures developed in accordance with the procedures prescribed in *RG 1.99, Revision 2.* Fluence was conservatively updated using DOT neutron transport methodology. Calculation of adjusted reference temperature by these procedures includes a margin term to ensure upper-bound values are used for the calculation of the P/T limits. Revision of the second capsule withdrawal schedule will not affect the P/T limits because they will continue to be established in accordance with *RG 1.99, Revision 2* or other applicable Nuclear Regulatory Commission [NRC] approved procedures.

This change is not related to any accidents previously evaluated. The proposed change is a revision of the second surveillance capsule withdrawal time, identified in Technical Specification Table 4.6-3, from approximately 18 effective full power (EFPY) years to approximately 21 EFPY. This change will not affect P/T limits as given in Pilgrim Technical Specifications Figures 3.6.1, 3.6.2, and 3.6.3. The proposed 3 EFPY change represents a small additional fluence relative to the end-of-life fluence.

Conservatisms within the current curves analysis compensates for any deviation in fluence. This change will not affect any plant safety limits or limiting conditions of operation. The proposed change will not affect reactor pressure vessel performance because no physical changes are involved and Pilgrim vessel P/T limits will remain in accordance with *RG 1.99, Revision 2* requirements. The proposed change will not cause the reactor pressure vessel or interfacing systems to be operated outside of their design or testing limits. Also, the proposed change will not alter any assumptions previously made in evaluating the radiological consequences of accidents. Therefore, the probability or consequences of accidents previously evaluated will not be increased by the proposed change.

- **The proposed changes do not create the possibility of a new or different kind of accident from any accident previously evaluated.**

The proposed change revises the second RPV material surveillance capsule withdrawal time in Pilgrim Technical Specification Table 4.6-3 from approximately 18 effective full power (EFPY) years to approximately 21 EFPY. This proposed change does not involve a modification of the design of plant structures, systems, or components. The proposed change will not impact the manner in which the plant is operated as plant operating and testing procedures will not be affected by the change. The proposed change will not degrade the reliability of structures, systems, or components important-to-safety because equipment protection features will not be deleted or modified, equipment redundancy or independence will not be reduced, supporting system performance will not be downgraded, the frequency of operation of equipment important-to-safety will not be increased, and increased or more severe testing of equipment important-to-safety will not be imposed. No new accident types or failure modes will be introduced as a result of the proposed change. Therefore, the proposed change does not create the possibility of a new or different kind of accident from that previously evaluated.

- **The proposed changes do not involve a significant reduction in a margin of safety.**

Appendices G and H of 10 CFR Part 50 describe the conditions that require pressure-temperature limits and provide the general bases for these limits. These appendices specifically require that pressure-temperature limits must provide safety margins at least as great as those given in the *ASME Code, Section III, Appendix G.* Until the results from the reactor vessel surveillance program become available, *RG 1.99, Revision 2* is used to predict the amount of neutron irradiation damage. The use of operating limits based on these criteria, as defined by applicable regulations, codes, and standards, provide reasonable assurance that nonductile or rapidly propagating failure will not occur, and will constitute an acceptable basis for satisfying the applicable requirements of General Design Criteria (GDC) 31.

The P/T limits are not derived from Design Basis Accident (DBA) analyses. They are prescribed during normal operation to avoid encountering pressure, temperature, and temperature rate of change conditions that might cause undetected flaws to propagate and cause nonductile failure of the reactor coolant pressure boundary (RCPB). Since the P/T limits are not derived from any DBA, there are no acceptance limits related to the P/T limits. Rather, the P/T limits are acceptance limits themselves since they preclude operation in an unanalyzed condition.

The proposed change will not affect any safety limits, limiting safety system settings, or limiting conditions of operation. The proposed change does not represent a change in initial conditions, or in a system response time, or in any other parameter affecting the course of an accident analysis supporting the Bases of any Technical Specification. The proposed change does not involve revision

of the P/T limits but rather a revision of the withdrawal time for the second surveillance capsule. The current P/T limits were established based on adjusted reference temperatures for vessel beltline materials calculated in accordance with of *RG 1.99, Revision 2*. P/T limits will continue to be revised, as necessary, for changes in adjusted reference temperature due to changes in fluence when two or more credible surveillance data sets become available.

When two or more credible surveillance data sets become available, P/T limits will be revised as prescribed by *RG 1.99, Revision 2*, or other NRC-approved guidance. Therefore, the proposed changes do not involve a significant reduction in any margins of safety.

These changes have been reviewed and recommended for approval by the Operations Review Committee and reviewed by the Nuclear Safety Review and Audit Committee.

Environmental Consideration

The proposed amendment changes the reactor pressure vessel (RPV) surveillance capsule pull interval. The proposed change is consistent with accepted engineering practice and methodologies. The proposed change does not impact plant configuration or design. The proposed change is to be used within the restricted area as defined in 10 CFR Part 20. Pilgrim Nuclear Power Station has determined the amendment involves no significant increase in the amounts and no significant change in the types of any effluents that may be released offsite, and there is no significant increase in individual or cumulative occupational radiation exposure resulting from the implementation of this proposed change. Pilgrim has performed a no significant hazards consideration analysis (see above) and found the proposed amendment involves no significant hazards. Accordingly, Pilgrim concludes the proposed amendment meets the eligibility criteria for categorical exclusion set forth in 10 CFR Part 51.22(c)(9). Therefore, Pursuant to 10 CFR Part 51.22(b), Pilgrim concludes no environmental impact statement or environmental assessment need be prepared in connection with the issuance of the proposed amendment.

Schedule of Change

This change will be implemented within 30 days following Pilgrim's receipt of its approval by the Commission.

ATTACHMENT 2 TO PILGRIM LETTER

Pilgrim Fluence Report

PNPS Fluence Report

Pilgrim Fluence vs EFPY
Per Ref's.1 &2)

References: 1. SWRI Report 02-5951 Dtd. 7/81 [1 EFPY= 31536000 sec/yr]
2. GE Report 277-1285 Dtd. 11/27/85 3.15E+07
3. Pilgrim Calc M-256 (&Att. A) Dtd. 1/23/86
4. CE Dwg. E-232-351-3 Vessel Internal Attachments
5. Sudds 91-81 (TR 7487-1) PNPS RPV T.S. P/T Limit Curves

Capsule locations are at 30,120,300 degrees from "0" azimuth
Worst case weld location (Heat 27204/12008) is at 60,180 and 300 degrees from "0" azimuth
Peak flux occurs at the 24.5 degree azimuth.
E: The Azimuthal Lead Factor for the capsules is .87(Ref. 1) or 1/.87= 1.15
The Azimuthal Lead Factor for the capsules is .93 (Ref. 2) or 1/.93= 1.08

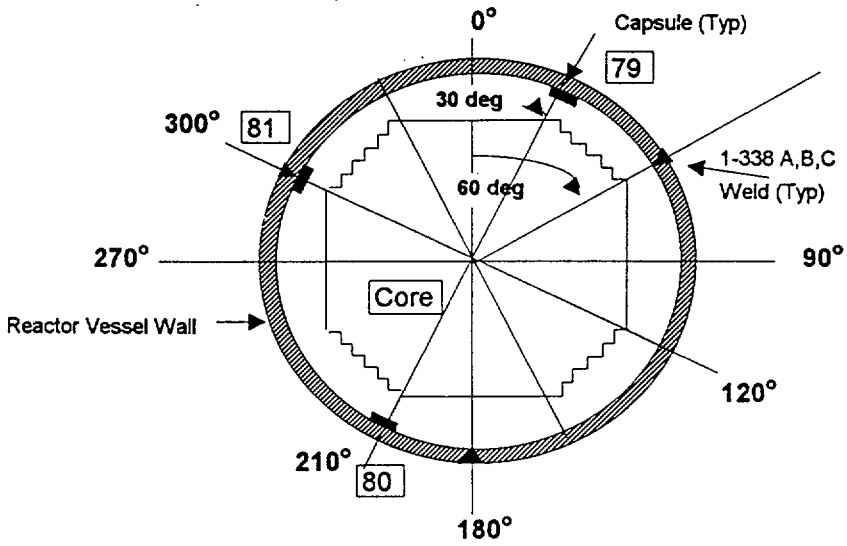

Fluence	Azimuth Location (Per Ref's.2&4)			
Peaks	Azimuth Lead Factors		Capsule	Weld
Azimuth	SWRI(Ref.	GE(Ref.2)	Part No.	ID
24.5		1		
30	0.87	0.93		
60	0.87	0.93	79	1-338 A
65.5		1		
114.5		1		
155.5		1		
180		0.39		
204.5		1		
210	0.87	0.93	80	1-338 B
245.5		1		
294.5		1		
300	0.87	0.93	81	1-338 C

Axial Location (per Ref 5)
(*Nodes per GE MDE277-1285)

Item	Elev (in)	*Node
Bot. Lower Head I	0	N/A
Bot. Active Fuel	211.1	1
Girth Wld. 1-344	242.5	5
Lower Int. Shell	242.5 to	5 to
Weld 1-338 A,B,C	398	24
Top Active Fuel	355.1	24

PNPS Fluence Report

Per Ref. 1(Unmodified) NOTE: "Unmodified" refers to results recorded from Ref. 1
(Flux rate is an Average per Ref. 1)
Determine vessel (&weld) lead factors and percentages
Ref. 1 reported (pg. 16) that the capsule to vessel lead factor is .87
Ref. 1 (pg. 16) also reported that the "total" effect at the vessel 1/4 T and 3/4 T locations are 1.3 and 3.8 (Respective Lead Factors)
Ref. 1 (pg. 31 reported the reduction in fluence at the 1/4 T and 3/4 T locations as 67% and 23% respectively.
These values are obtained as follows.

Maximum vessel exposure= Capsule Exposure/ Lead Factor = 1/.87 = 1.15
Vessel Exposure @ 1/4 T x Max Vessel Exp. = (1/(1.3x1. 67% of Capsule
Vessel Exposure @ 3/4 T = (1/(3.8x1. 23% of Capsule

NOTE: The SWRI report did not adjust the fluence lead factor to acount for the location of the **weld** relative to the capsule. However, considering the common location of the capsule and the longitudinal seam weld (1-338 C) at 300° Azimuth, the weld surface fluence would be comparable to the capsule (i.e. Lead Factor =1) Also, SWRI did not mention (nor consider) an axial lead factor.

Azimuthal Lead Factor = **0.87** (Capsule to Vessel)
Capsule/Weld flux$_{(Cyc\ 4)}$= **1.74E+09** n/cm^2-se (Unmod)
Vessel flux$_{(Cyc\ 4)}$= 2.00E+09 n/cm^2-se (Unmod)

1 Cycle = 18 Mos.
From Oct 1979

			Fluence per SWRI Report (Unmodified)							
			Base Metal				Weld 1-338(Heat 12008/27204)			
Cycle		Capsule	Plate @ ID		Plate @ 1/4T		Wld. @ ID		Weld. @ 1/4T	
*(Est.)	EFPY	Fluence	Fluence	ΔRT_{NDT}	Fluence	ΔRT_{NDT}	Fluence	ΔRT_{NDT}	Fluence	ΔRT_{NDT}
1.1	*1.0*	*5.5E+16*	*6.3E+16*	*10.80*	*4.2E+16*	*8.05*	*5.5E+16*	*19.52*	*3.7E+16*	*14.48*
1.9	*2.0*	*1.1E+17*	*1.3E+17*	*17.42*	*8.5E+16*	*13.30*	*1.1E+17*	*31.76*	*7.4E+16*	*24.13*
4.0	**4.2**	2.3E+17	2.6E+17	27.64	1.8E+17	21.64	2.3E+17	50.83	1.5E+17	39.61
5.0	**5.3**	2.9E+17	3.3E+17	31.74	2.2E+17	25.06	2.9E+17	58.55	1.9E+17	46.00
6.0	**6.6**	3.6E+17	4.2E+17	36.13	2.8E+17	28.75	3.6E+17	66.82	2.4E+17	52.91
7.0	**8.1**	4.4E+17	5.1E+17	40.22	3.4E+17	32.22	4.4E+17	74.57	3.0E+17	59.45
8.0	**9.3**	5.1E+17	5.9E+17	43.30	3.9E+17	34.86	5.1E+17	80.41	3.4E+17	64.42
8.6	**10.0**	5.5E+17	6.3E+17	45.03	4.2E+17	36.34	5.5E+17	83.69	3.7E+17	67.22
9.0	**10.5**	5.8E+17	6.6E+17	46.13	4.4E+17	37.29	5.8E+17	85.79	3.9E+17	69.03
10.0	**11.7**	6.4E+17	7.4E+17	48.76	4.9E+17	39.57	6.4E+17	90.80	4.3E+17	73.33
10.3	**12.0**	6.6E+17	7.6E+17	49.43	5.1E+17	40.15	6.6E+17	92.08	4.4E+17	74.43
11.0	**12.9**	7.1E+17	8.1E+17	51.22	5.5E+17	41.70	7.1E+17	95.49	4.7E+17	77.38
12.0	**14.5**	7.9E+17	9.1E+17	54.26	6.1E+17	44.36	7.9E+17	101.31	5.3E+17	82.42
12.3	**15.0**	**8.2E+17**	9.5E+17	55.20	6.3E+17	45.18	8.2E+17	103.10	5.5E+17	83.99
13.0	**16.1**	8.8E+17	1.0E+18	57.08	6.8E+17	46.83	8.8E+17	106.70	5.9E+17	87.13
14.2	**18.0**	9.9E+17	1.1E+18	60.21	7.6E+17	49.60	9.9E+17	112.72	6.6E+17	92.40
15.0	**19.3**	1.1E+18	1.2E+18	62.17	8.2E+17	51.33	1.1E+18	116.48	7.1E+17	95.71
15.5	**20.0**	1.1E+18	1.3E+18	63.23	8.5E+17	52.28	1.1E+18	118.52	7.4E+17	97.51
20.0	**28.9**	1.6E+18	1.8E+18	74.43	1.2E+18	62.32	1.6E+18	140.14	1.1E+18	116.77
23.0	**32.0**	1.8E+18	2.0E+18	77.74	1.4E+18	65.32	1.8E+18	146.54	1.2E+18	122.55

PNPS Fluence Report

Per Ref. 2. (Modified after Cycle 4)

NOTE:The cumulative fluence is the fluence at Cycle 4 plus the time x flux rate from Ref 2.
(Flux rates are averages from the GE report)

Azimuthal Lead Factor = **0.93** (Capsule to Vessel) Axial Lead Factor = **1.02**

Capsule/Weld $flux_{(Cyc\ 5)}$= 1.27E+09 n/cm^2-sec

Vessel $flux_{(Cyc\ 5)}$= 1.37E+09 n/cm^2-sec

			Fluence per GE Report (Modified)							
			Base Metal				Weld 1-338(Heat 12008/27204)			
Cycle		Capsule	Plate @ ID		Plate @ 1/4T		Wld. @ ID		Weld. @ 1/4T	
*(Est.)	EFPY	Fluence	Fluence	ΔRT_{NDT}	Fluence	ΔRT_{NDT}	Fluence	ΔRT_{NDT}	Fluence	ΔRT_{NDT}
1.1	*1.0*	*5.5E+16*	*6.3E+16*	*10.80*	*4.2E+16*	*8.05*	*5.5E+16*	*19.52*	*3.7E+16*	*14.48*
1.9	*2.0*	*1.1E+17*	*1.3E+17*	*17.42*	*8.5E+16*	*13.30*	*1.1E+17*	*31.76*	*7.4E+16*	*24.13*
4.0	**4.2**	2.3E+17	2.6E+17	*27.64*	1.77E+17	*21.64*	2.3E+17	*50.83*	1.5E+17	*39.61*
5.0	**5.3**	2.84E+17	3.06E+17	30.21	2.05E+17	23.78	2.9E+17	58.58	1.9E+17	46.03
6.0	**6.6**	3.36E+17	3.61E+17	33.26	2.43E+17	26.33	3.43E+17	64.54	2.3E+17	51.00
7.0	**8.1**	3.94E+17	4.24E+17	36.36	2.84E+17	28.94	4.02E+17	70.61	2.7E+17	56.11
8.0	**9.3**	4.4E+17	4.75E+17	38.74	3.19E+17	30.96	4.51E+17	75.27	3E+17	60.05
8.6	**10.0**	4.7E+17	5.07E+17	40.09	3.40E+17	32.11	4.81E+17	77.92	3.2E+17	61.65
9.0	**10.5**	4.9E+17	5.27E+17	40.96	3.54E+17	32.86	5E+17	79.64	3.3E+17	63.09
10.0	**11.7**	5.4E+17	5.79E+17	43.06	3.89E+17	34.65	5.49E+17	83.74	3.6E+17	66.57
10.3	**12.0**	5.5E+17	5.93E+17	43.60	3.98E+17	35.11	5.63E+17	84.80	3.7E+17	67.47
11.0	**12.9**	5.9E+17	6.31E+17	45.04	4.24E+17	36.35	5.99E+17	87.62	3.9E+17	69.87
12.0	**14.5**	6.5E+17	7.00E+17	47.52	4.70E+17	38.49	6.64E+17	92.49	4.4E+17	74.03
12.3	**15.0**	6.7E+17	7.23E+17	48.29	4.85E+17	39.16	6.85E+17	94.01	4.5E+17	75.33
13.0	**16.1**	7.2E+17	7.69E+17	49.84	5.16E+17	40.50	7.3E+17	97.05	4.8E+17	77.95
14.2	**18.0**	7.9E+17	8.52E+17	52.45	5.72E+17	42.78	8.08E+17	102.18	5.3E+17	82.38
15.0	**19.3**	**8.4E+17**	9.08E+17	54.09	6.09E+17	44.21	8.61E+17	105.42	5.7E+17	85.18
15.5	**20.0**	8.7E+17	9.39E+17	54.99	6.30E+17	45.00	8.9E+17	107.18	5.9E+17	86.71
20.0	**28.9**	1.2E+18	1.32E+18	64.61	8.87E+17	53.50	1.25E+18	126.14	8.3E+17	103.32
23.0	**32.0**	1.36E+18	1.46E+18	67.51	9.78E+17	56.09	1.38E+18	131.85	9.1E+17	108.38

* 18 month cycle through RFO-10 & 24 Mo. cycle from RFO-11 on

Determine time for capsule to reach vessel EOL Fluence

Vessel Fluence = [Peak $Fluence_{[Cycle(7)]}$ + ($EFPY_{[Cyc(x)]}$ - $EFPY_{[Cyc(7)]}$)*3.156e^7(Sec/EFPY)*Peak Flux(n/cm^2-sec)]

Capsule Fluence = Vessel Fluence*Lead Factor (LF)

Conclusion

No capsule will reach a fluence value comparable to the vessel wall during the life of the plant, which is currently 32 EFPY, because of the lead factor less than unity.

The capsule fluence (from the SWRI report) forms the basis for the Tech. Spec Ammendment withdrawal schedule. However, fluence values based on service time were significantly reduced per the GE Neutron Transport Analysis. Consequently, the fluence based on the GE analysis at 19.23 EFPY would be comparable to the 15 EFPY fluence based on the SWRI report.

PNPS Fluence Report

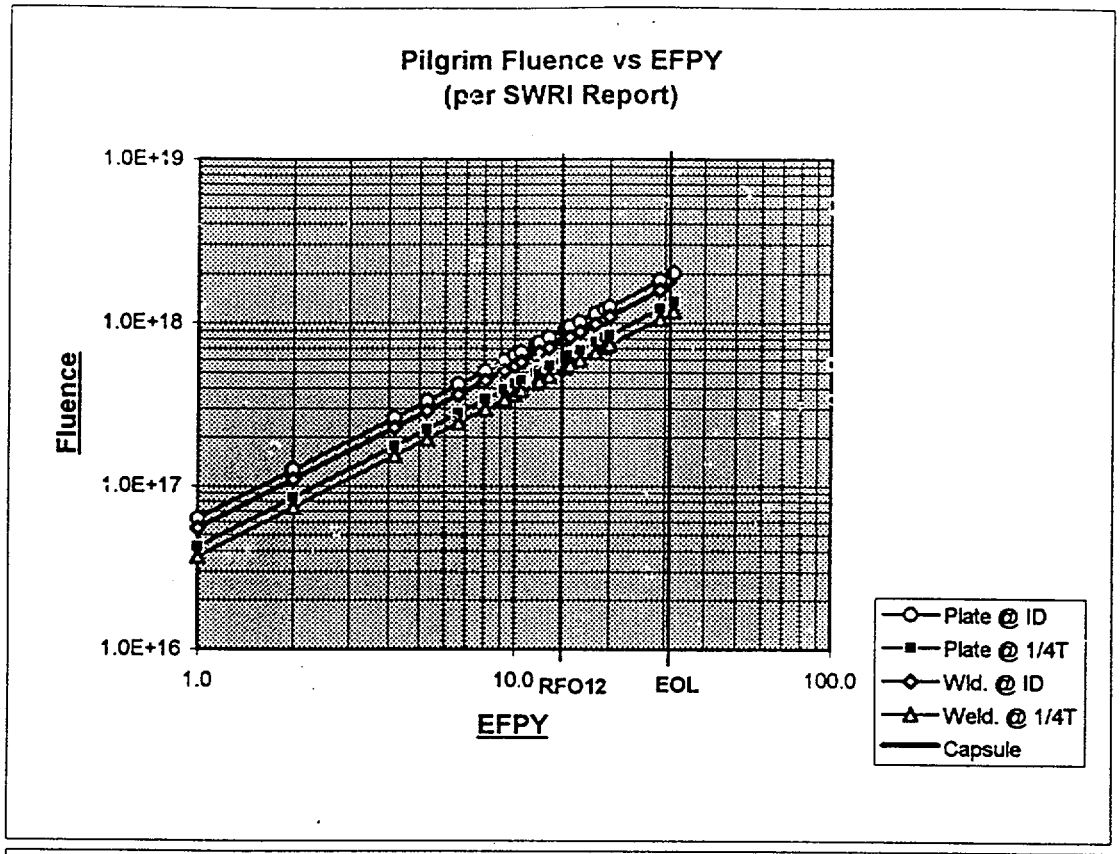

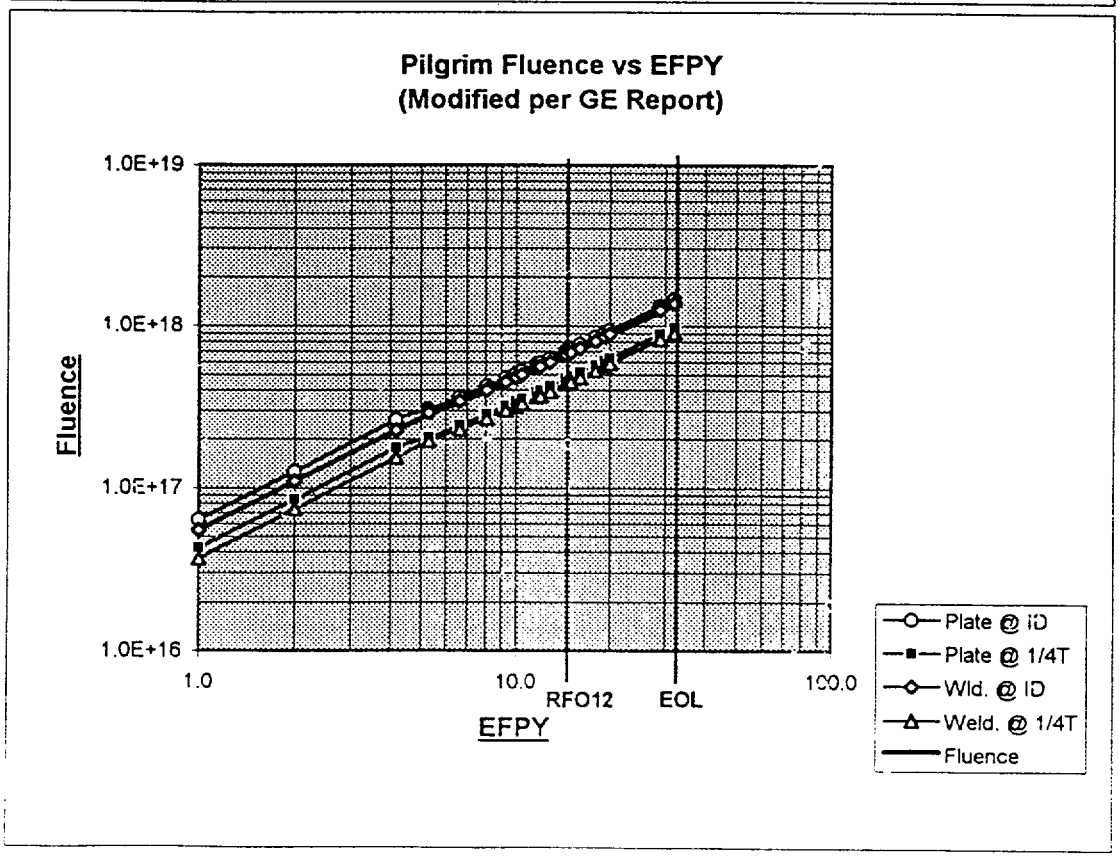

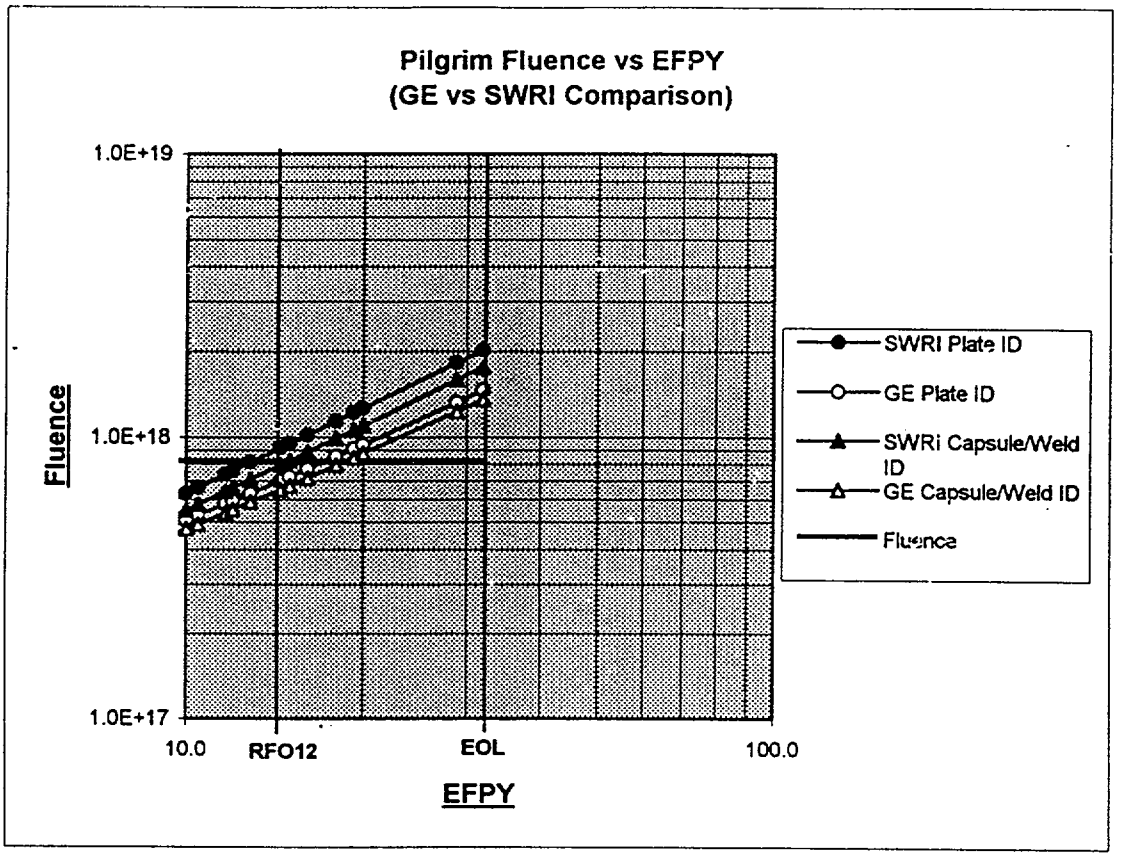
Pilgrim Fluence vs EFPY
(GE vs SWRI Comparison)
1.0E+19
1.0E+18
1.0E+17
Fluence
10.0
RFO12
EOL
100.0
EFPY
SWRI Plate ID
GE Plate ID
SWRi Capsule/Weld ID
GE Capsule/Weld ID
Fluence

ATTACHMENT 3 TO PILGRIM LETTER

Proposed Changed Pilgrim Technical Specification Page 3/4.6-13

Note: Tables 4.6-1 and 4.6-2 have been deleted.

PNPS
TABLE 4.6-3

REACTOR VESSEL MATERIAL
SURVEILLANCE PROGRAM WITHDRAWAL SCHEDULE

Capsule Number	Effective Full Power Years (EFPY)
1	4.17
2	21 (approx.)
3	32 (End of Life)

ATTACHMENT 4 TO PILGRIM LETTER

Marked-up Current Pilgrim Page 3/4.6-13

Note: Tables 4.6-1 and 4.6-2 have been deleted.

PNPS
TABLE 4.6-3

REACTOR VESSEL MATERIAL
SURVEILLANCE PROGRAM WITHDRAWAL SCHEDULE

Capsule Number	Effective Full Power Years (EFPY)
1	4.17
2	~~18~~ 21 (approx.)
3	32 (End of Life)