GEOCHRONOLOGY BY (U,Th)-^{4}He AND ^{4}He-^{222}Rn METHODS

A Proposed New Activity for Site Characterization
of the Yucca Mountain Site, Nevada Research
and Development Area, Nevada

Submitted to

U.S. Department of Energy
Nevada Operations Office
P.O. Box 98518
Las Vegas, Nevada 89193-8518

Prepared by

UNC Geotech
P.O. Box 14000
Grand Junction, Colorado 81501

August 1, 1988

8912080170 891122
PDR WASTE
WM-11 PDR

RECORD COPY

TABLE OF CONTENTS

Section		Page
1.0	Purpose and Objectives of Study	1
1.1	Purpose	1
1.2	Use of Results	2
1.3	Resolution of Performance Issues	3
1.4	Relation to Regulatory Requirements	3
2.0	Rationale for Application of (U,Th)-^{4}He and ^{4}He-^{222}Rn dating	4
2.1	Scientific Basis Originating in Prior Work	4
2.2	Relation to Saturated and Unsaturated Zone Hydrology	7
2.3	Identifiable Processes, Advantages and Limitation of Methods	9
3.0	Description of (U,Th)-^{4}He and ^{4}He-^{222}Rn Study	10
3.1	Sample Collections	10
3.2	Sampling Opportunities	10
3.3	Sample Analysis - Methods, Reproducibility, and Reliability	11
3.4	Equipment and Services Required	12
3.5	Supporting Data Requirements	13
3.6	Analysis and Integration of Results	14
3.7	Quality Assurance for Activities	
4.0	Application of Results	15
4.1	Site Characterization	15
4.2	Resolution of Performance Issues	15
5.0	Schedule and Milestones	16
References		17

STUDY PLAN FOR GEOCHRONOLOGY BY (U,Th) ^{4}He AND ^{4}He-^{222}Rn DATING METHODS

1.0 Purpose and Objectives of Study

1.1 Purpose

This study is directed toward obtaining knowledge in four areas significant to the site characterization process. The first is to determine the extent to which concordance exists for residence times of groundwaters. Concordance, in this context, is defined as the same residence time obtained by alternative chronology methods. Presently, among the suite of geochronology methods available, only ^{14}C, ^{36}Cl, and (U,Th)-^{4}He are reasonably well understood for this practice.

The second type of information sought relates to the identification of circumstances where groundwaters are best represented as mixed components. The composition of radiogenic and non-radiogenic noble gases will vary in accordance with the prior history of groundwater flow. When combined with other geochemical data, it is often possible to resolve multiple components in such waters and limit the residence time for one particular component. Apparent groundwater ages obtained by a single chronology method that treats the groundwater as a one-component system does not normally yield valid results for a saturated zone. Often, young recharge waters are being added to some preexisting water that is older. To resolve these components of different age, it is necessary to invoke more than one chronology method.

A third aspect of the study is to determine residence times for waters, or components thereof, that are beyond the limit accessible to the ^{14}C and ^{36}Cl methods. The (U,Th)-^{4}He chronometer functions in a manner opposite to that of ^{14}C and ^{36}Cl. Both these isotopes undergo radioactive decay such that eventually their concentrations fall below detection limits. The ^{4}He accumulates with time, and hence there is no upper limit to the determinable age.

The fourth type of information that is valuable relates to examining consistency of (U,Th)-^{4}He ages with flow rates inferred by the physical hydrology methods. Comparison of these methods provides insight as to whether present day hydrologic gradients have persisted sufficiently long to be reflected in concentration gradients of ^{4}He. The magnitude of flow at a given location will be proportional to the depletion of ^{4}He that could have accumulated in the combined water plus rock system over the available geologic time.

1.2 Use of Results

Data from the measurements of noble gases (^{4}He, ^{20}Ne, ^{36}Ar, ^{40}Ar/^{36}Ar, and ^{222}Rn) in groundwater and core will be combined with U, Th, and K results in order to calculate apparent groundwater residence times and paleotemperature. The calculations will rely on published methods for single and multi-component systems (Zartman et al., 1961; Andrews and Lee, 1979; Torgersen, 1980; Mazor et al., 1986; and Zaikowski et al., 1987).

For paleotemperature calculations (Heaton et al., 1986), the results will be examined to determine if the observed compositions are explicable in terms of recent in-situ equilibration with the unsaturated zone or whether the samples have maintained sufficient integrity to have preserved their paleothermal composition at recharge. For the case of potential equilibration with the unsaturated zone, the data will be evaluated for the possible loss of ^{4}He that may have occurred for the combined water plus rock system. It should be noted that it is possible for apparent (U,Th)-^{4}He ages to exceed apparent ^{14}C ages despite some fractional ^{4}He losses if mixing of old and young groundwaters has occurred. Also, a fault in the (U,Th)-^{4}He ages, due to ^{4}He losses, will yield ages younger than the true age. This translates to more conservative estimates of residence time and flow rates for the site. The results would then represent minimum ages and maximum flow rates.

More ideally, a synthesis of isotopic and geochemical data is intended to reveal detailed processes that have produced observed compositions. To be useful, the (U,Th)-^{4}He systematics will need to be coupled to the other chronology methods, all of which require geochemical mixing models for both

the unsaturated and saturated zones. None of the chronology methods are flawless. Important, therefore, is evaluation of their inherent reliability in providing meaningful interpretation in context with hydrogeochemical models of the site.

1.3 Resolution of Performance Issues

The results of this study will provide quantitative information about groundwater residence times relative to specific processes. This will aid in resolving two performance issues described in the Site Characterization Plan (DOE, 1988, Section 8.1).

Issue 1.6: Will the site meet the performance objective for pre-waste-emplacement ground-water travel time as required by 10 CFR 60.113?

Issue 1.1: Will the mined geologic disposal system meet the system performance objective for limiting radionuclide material to the accessible environment as required by 10 CFR 60.112 and 40 CFR 191.13?

The groundwater chronology methods can address these issues provided the exceptional characteristics of the methods are included in the evaluation. These exceptional characteristics define the allowable realm of application of certain methods. The distinctions are defined in this study plan (Section 2.0).

1.4 Relation to Regulatory Requirements

Regulations specify time-dependent criteria for compliance of the geologic repository system. One is contained in the Department of Energy's guideline 10 CFR 960.4-1-2(b)(1). Travel times to the accessible environment greater than 10,000 years are given as the favorable condition. The Nuclear Regulatory Commission [10 CFR 60.113(a)(2)] specifies minimum groundwater

travel times to the accessible environment of at least 1000 years along the fastest path of likely radionuclide transport.

To determine these travel times by geochronology methods it is necessary to identify exactly what process is being dated by any particular method. None yield equivalent ages. At Yucca Mountain and its vicinity, the measured isotopic compositions used for chronology will be controlled by three dominant time-dependent processes already identified:

(1) Vertical transport in the unsaturated zone
(2) Lateral transport in the saturated zone
(3) Mixing of preexisting waters with infiltration waters.

Since multiple processes have been identified, it is necessary to invoke different dating schemes. From the standpoint of geochronology, the important principle involved is that one must have at least one chronometer to date each particular event or process. It is not possible, for instance, to date two different processes with a single chronometer unless one of the processes can be proven to be unimportant.

2.0 Rationale for Application of (U,Th)-^{4}He and ^{4}He-^{222}Rn Dating

2.1 Scientific Basis Originating in Prior Work

The first use of noble gas data to provide information on groundwater flow was reported by Sugisaki (1961). Subsequently, much of the early work using combined isotopic methods stemmed from the IAEA efforts on water resources in developing nations (IAEA Bulletin, 2/1987). Since then, a greater diversity of groundwater systems have been studied, and greater emphasis has been placed on the non-radiogenic and radiogenic noble gas components (see Mazor et al., 1987, and references therein). From these studies, a number of observations have emerged regarding the realm of application of the available methods.

The first observation is that in order to use isotopic data to obtain chronology information, it is often necessary to determine the extent to which

the groundwater may be affected by mixing. Commonly, this is accomplished by correlating the isotopic data with geochemical data. An example of this, for instance, would be the correlation of ^4He with chlorine. Sometimes the isotopic data themselves aid in limiting the relative proportions of various components. An example of this would be simultaneous use of tritium, ^{14}C, and ^4He (Mazor et al., 1987). The goal is normally to determine the volumetric proportions of each fraction of the water to which the isotopic dating method corresponds.

The second observation pertains to the systematic correlations between the (U,Th)-^4He and ^{14}C methods. Samples from wells along a hydrologic gradient show correlated results for (U,Th)-^4He and ^{14}C ages. However, the types of correlations are not the same. When data are plotted as (U,Th)-^4He age vs. ^{14}C age linear correlations are found but the intercept (corresponding to zero age water at recharge) can have a finite value for either method. The correlation where the (U,Th)-^4He age extrapolates to a finite value as the ^{14}C age approaches zero corresponds to cases where the groundwater is young (<10^6 years) relative to the host rock (>10^8years). The correlation where the ^{14}C age has a finite value as the (U,Th)-^4He age approaches zero corresponds to the case where the recharged surface waters have spent a substantial fraction of their time in the unsaturated zone. The greater the time interval that waters reside in the unsaturated zone the greater will be the expected age difference by the two methods. The reasons for this are discussed in Section 2.2 below.

The final important result from the prior research bears only on the (U,Th)-^4He method. This method provides the most reliable results for groundwater in relatively high porosity rock (5-30 percent). In very low porosity rock, such as granites, the method is more difficult to apply in a definitive manner. The ancillary data required, such as the definition of porosity and the redistribution of U and Th to the fracture porosity, require accompanying studies on the combined microscopic and macroscopic rock mass not easily accomplished without extensive drilling. For the Yucca Mountain site, it would be useful to adopt an approach that helps reduce uncertainties resulting from rock inhomogeneity and type of porosity.

The advantage of using ^{4}He-^{222}Rn as a dating scheme is described by Torgersen (1980). One of the parameters that enters residence time calculations is the porosity. Often it is the parameter with greatest uncertainty. Representative average values are sometimes difficult to define to better than a factor of two. The use of ^{4}He with ^{222}Rn eliminates porosity form the residence time equations and therefore could supplement the reliability analysis for the conventional (U,Th)-^{4}He method. However, from prior work at other sites, two additional parameters are critical in order for the method to work. The first is to distinguish between the supported and unsupported ^{222}Rn components in the groundwater. Only the ^{222}Rn component supported by ^{226}Ra in the rock is chronologically significant. The ^{222}Rn component produced by ^{226}Ra in the water is not chronologically significant. A second requirement is the ability to distinguish instantaneous and diffusive ^{4}He production when the ratio of ages for the water and host rock is very large (10^{6}). This distinction will not be necessary for the study because of the relatively young age of the host rock at Yucca Mountain.

In light of the foregoing, the common theme of prior groundwater chronology studies is recognition of the need to treat groundwaters as multi-component systems. It is not very likely that the groundwaters at Yucca Mountain and its vicinity will prove to be an exception. From the prior work, some of the approaches can be readily defined. The most important of these are:

(1) Examination for correlated or systematic relations among the ^{14}C, (U,Th)-^{4}He and K-^{40}Ar chronometers.

(2) The search for introduction of deep old waters into shallow aquifers via simultaneous use of (U,Th)-^{4}He and K-^{40}Ar.

(3) The use of tritium (present in modern water from weapons testing) to limit the fractions of water that may have been very recently introduced.

(4) The extension of groundwater geochemical mixing models to the isotopes used in geochronology.

(5) The combining of models of rate processes inferred from the geochronology methods to corresponding limitations inferred from uranium series disequilibrium for integrated processes.

It is from the combination of these considerations that the alternative conceptual models for interpretation of isotopic data can be limited. These are needed to support the higher level findings on the geohydrologic disqualifying and qualifying conditions described in 10 CFR 960.4-2-1(a) and (d).

2.2 Relation to Saturated and Unsaturated Zone Hydrology

Figure 1 shows how various chronology methods are related to the circumstances at Yucca Mountain and its vicinity. Measurement of a water sample with an apparent age, T_4, will represent the sum of both the process of aging and mixing. This is true regardless of the particular chronology method used. What becomes critical is how one defines the initial age of a process and its meaning to the particular chronology method being applied. Certain signatures provide guidance because each chronology method functions differently.

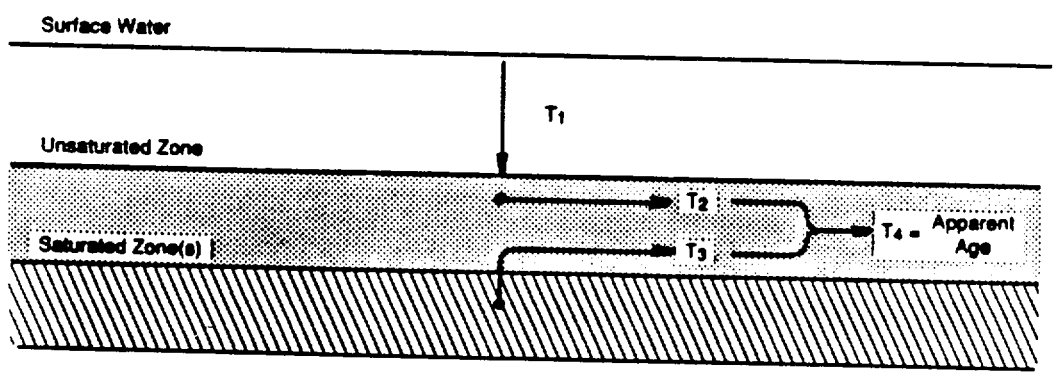

Figure 1. Apparent age of a groundwater (T_4) may result from mixing of several groundwaters of differing ages and processes.

Assume no mixing of deep waters has occurred. This is equivalent to saying $T_3 = 0$ (see Figure 1). If the unsaturated zone is adequately shielded from the atmosphere, then the ^{14}C age will represent the sum of the times $T_1 + T_2$; whereas, the (U,Th)-^4He age will represent the time T_2. These times will not be the same unless transport through the unsaturated zone is very rapid. The ages are expected to differ (be discordant) for the following reasons. The ^{14}C, originating by cosmic ray production in the atmosphere, will begin to function as a chronometer as the water transits to depth in the unsaturated zone and becomes isolated from the atmosphere. During this time period, the (U,Th)-^4He clock does not function. The ^4He is produced in the rock and released to the liquid or gas phase. However, the partial pressure of ^4He in the unsaturated zone is not likely to be sufficient to keep the ^4He confined to the water. The paucity of ^4He in numerous soil gas surveys in diverse geologic environments provides this evidence. The ^4He will be released from the water to approach equilibrium with the gas phase. In transiting the unsaturated zone, the ^4He will not substantially accumulate in the liquid phase.

The (U,Th)-^4He chronometer will begin functioning when the water reaches the saturated zone and attains hydrostatic pressure. It is at this point that the assumption of the method (having a watertrack system) begins to be valid. The signature for the combined processes is the one mentioned earlier. Namely, that for a suite of samples along a hydrologic gradient, the age-age correlation (^{14}C vs. (U,Th)-^4He) will be of a type where the ^{14}C age extrapolates to a finite value when the (U,Th)-^4He age approaches zero.

In practice, the mixing with preexisting waters can be significant. For instance, one cannot say if a sample from the saturated zone, with 50 pmc (percent modern carbon), represents loss in activity during transit in the unsaturated zone or whether 50 volume percent of the water was added in modern times to a preexisting water with no ^{14}C. The combination of chronology methods with mixing models is necessary to distinguish the properties of the preexisting water (designated with time T_3 in Figure 1). Correlation of ^4He with geochemistry of deeper water samples is one possible way of identifying this component. Other methods are excluding the presence of very old waters

by the absence of ^{40}Ar or using conventional geochemical groundwater component resolution by Piper diagrams.

2.3 Identifiable Processes, Advantages, and Limitations

Establishing the validity of parent assumptions is often the major portion of total effort in geochronology studies. This is particularly true in the case of the methods tried for groundwaters because the work is relatively new and the number of studies are few. Knowledge of a semi-quantitative character is always obtained. An example of this would be the specification of minimum ages by the (U,Th)-^{4}He method when ^{4}He losses by natural processes proves to be important. The more difficult step is obtaining an age, associated with a rigorously defined process, along with a formally obtained uncertainty for the specified age. That is not as easily accomplished and depends on the particular geologic environment studied.

Two processes at the Nevada Research and Development Area will control the ability to use the chronology methods with reliance. The first is the degree of partial equilibration of the unsaturated zone with the atmosphere. The second is the degree of equilibration of the saturated zone with the unsaturated zone. The first process can produce faults in the ^{14}C method and the second process can produce faults in the (U,Th)-^{4}He method. The relative importance of these two processes can be quantified if a sufficient suite of isotopic and geochemical methods are employed. However, it is not possible to predict which chronology method will prove to be the most reliable and relatable to flow in the saturated zone.

Although the principal concern of this study is for applications of geochronology methods to flow in the saturated zone, there are obvious relations to identifying rate processes important to the unsaturated zone. It is within this general framework of distinguishing characteristics of the chronology methods that the study will be conducted.

3.0 Description of (U,Th)-^{4}He and ^{4}He-^{222}Rn Study

3.1 Sample Collections

Groundwater samples will be collected from wells that penetrate the saturated zone. A multiplicity of sampling methods exist for various well construction configurations. The most reliable methods involve use of downhole positive displacement pumps (commonly used in the petroleum industry) that can maintain wellhead water pressures equal to, or exceeding, the in-situ formation pressure. In the absence of pumping capability, groundwater grab samples will be collected subsequent to bailing in order to induce flow from the formation. This would be the second most reliable method. For instances where it is possible to collect samples by both methods (by removal of the pumping equipment), the reliability of the latter method can be evaluated for the site-specific conditions. A third sampling method of value involves recovery of all water produced from a well under closed-system conditions. Measurements are then made on both water and gas fractions retained in a holding vessel. The steps required (written procedures) for these sample collections are described in the associated quality assurance manuals for this work.

Gas phase samples from the unsaturated zone will be needed to evaluate the utility and reliability of the data for chronology applications (see Section 2.3). Additional gas phase samples from the unsaturated zone will be collected to obtain quantitative limits important to saturated-unsaturated zone equilibration.

From the earlier discussion (Section 2.1), it was shown that the fractions of radiogenic gas lost from the rock enters into the residence time calculations. These data will be obtained from the core samples of corresponding hydrologic units.

3.2 Sampling Opportunities

The number of wells suitable for collecting appropriate samples may be as few as 8 or as many as 40 (see DOE/RW-0161, pp. 78-79 for intended drilling

activities). In particular, samples will be collected from the deep wells proposed for hydrologic or water table drilling. These are described in the SCP/CD by Investigation 8.3.1.4.1 (Table 8.3.1.4-2 and Figure 8.3.1.4-2).

Sampling opportunities can occur at a number of stages in association with hydrologic testing efforts. Suites of samples are normally collected to determine the time-dependent approach to representative compositions. Prior work has shown that reproducibility of samples collected in the field can range from a few percent to factors of three. The latter variation is usually traceable to insufficient recovery or maintenance of hydrostatic pressure. For wells that show high groundwater production, the samples collected during the latter stages of withdrawal (by either pumping or bailing) are usually considered more reliable on the grounds that they contain the highest ^{4}He and ^{222}Rn concentrations. The opposite effect can be envisioned for wells exhibiting low production. Water removal from wells having low production can induce phase changes (outgassing) such that lower than representative concentrations are found in the latter stages of withdrawal. The consequences of this would be calculation of an apparent groundwater residence time that is younger than the true age.

Monitoring before and after substantial water withdrawal in hydrologic testing allows identification of potential sampling faults. For the critical case of low producing wells, it is possible to capture and separate the noble gases from all water produced in order to obtain both integrated values and time dependent variation.

3.3 Sample Analysis - Methods, Reproducibility, and Reliability

Measurements of the noble gases in water and rock samples are to be made by static mass spectrometer measurements. Isotopic compositions are made directly after extraction, separation, and purification of the gas phase components. For rock samples, high temperature (1600°C) melting of samples at ultra-high vacuum conditions (10^{-8}torr) is necessary to achieve negligible blank contributions. Concentrations are determined by the addition of separated isotopes to the sample for calibration purposes (isotope dilution

methods). Isotope dilution spikes usually consist of various high purity mixtures of ^{3}He, ^{22}Ne, ^{38}Ar, ^{86}Kr, and ^{128}Xe. These are calibrated against the known composition of the atmosphere (air). By these methods, all data is traceable to the composition of the earth's atmosphere for both concentrations and isotopic composition.

Uncertainties in the use of results from laboratory measurements are rarely an important factor. Isotopic ratios to better than one or two percent are routinely achieved using electron multiplier detectors. For higher precision, faraday cup measurements can be employed to achieve 0.3 percent. Of greater concern is the reproducibility of field efforts. Integrated uncertainties from samples collected in the field usually limit reproducibility to 5 percent due to minor air contamination and outgassing. In practice, for reporting results, full error propagations are applied to include statistical errors from laboratory measurements with actual reproducibility of the field work. This is gauged by repetitive sampling at the wells.

For the calculations of residence times, the error propagations include uncertainties determined for ^{4}He, U, Th, and porosity. These combined uncertainties will yield calculated ages reliable to somewhere between 25 percent to a factor of two. The favorable conditions for low uncertainty in calculated residence times are high concentrations for ^{4}He, defined here as being more than a factor of two greater than the air-saturated water value of 4.2×10^{-8} ccSTP/cc water. Also favorable are concentrations of U and Th that exceed ppm levels and are fairly homogeneous. These criteria for reliability can only be rigorously tested when the site-specific conditions are established.

3.4 Equipment and Services Required

Minor additions to field sampling equipment for compatibility with specific well construction may be required. Standard procedures and corresponding equipment exist to perform sample collections. Both are described in the quality assurance manuals developed at the U.S. Department of Energy, Grand Junction Projects Office.

Some laboratory equipment may be required to replace components expended during the course of work. Additionally, alternative methods for extraction of noble gases from core will be developed to confirm validity of the conventional methods.

3.5 Supporting Data Requirements

The geochemical parameters that enter into residence time calculations are the concentrations of potassium (K), uranium (U), and thorium (Th) in both rock and water. Normally, the concentrations in rock dominate in importance. The degree of geochemical homogeneity of these species is additional information important to defining uncertainties for calculated residence times.

The best method for coupling the noble gas data to geochemical compositions involves comparison studies of K, U, and Th data from well logs with laboratory analysis of corresponding core. Uncertainties in compositions obtained from logging data are usually greater than those obtained by laboratory measurements. However, integrated values from logging data can provide more meaningful average values needed for residence times calculations. For example, zones of enhanced U and Th mineralization can be readily identified. These could be missed even with a fairly comprehensive suite of core and composite core analysis.

For the ^{4}He-^{222}Rn studies, it is necessary to distinguish between the supported and unsupported component of ^{222}Rn in the water. The ^{222}Rn component that can be used for obtaining residence times is that fraction derived from ^{226}Ra in the rock and released to the water. The component of ^{222}Rn derived from ^{226}Ra dissolved in the water is a non-chronologically significant component which must be subtracted from the total ^{222}Rn content. The relative proportions of these ^{222}Rn components govern the reliability of the ^{4}He-^{222}Rn method. The distinction between these is made, in part, by measuring the ingrowth of ^{222}Rn in the groundwater samples after they have been initially outgassed (purged). Additional data from the uranium-series disequilibrium studies are used to obtain the fractional redistribution and conservation of ^{226}Ra for the combined water plus rock system.

The two physical parameters that enter into residence time calculations are porosity and rock density. Both of these are already reasonably well established for the Yucca Mountain site.

3.6 Analysis and Integration of Results

Statistical evaluations are made for the time-dependent isotopic ratios determined in the laboratory. Measurement requirements are six to ten cycles of isotopic ion currents for each noble gas species. Additional physical measurements are required for the data reduction process. These include volumes for field sampling equipment, precise capacitive manometer pressure measurements, water density, and total dissolved solids. Some values for these ancillary measurements are determined by multiple methods. In some instances, certified calibrations from manufacturers are used. Formal error assignments are generated for all measurements.

3.7 Quality Assurance for Activities

This study will have two parent quality assurance manuals for the technical aspects of work. The first is a Mass Spectrometer Procedures Manual, which gives detailed step-by-step procedures for the receipt and processing of samples, their physical measurement, corresponding calibrations, data reduction, and records management. This manual is one previously used for NQA-1 activities. Field work for sample collection and handling may have some exceptional requirements relative to other similar studies performed in the past. Also, integration for compatibility with other field work is likely. A second manual that consolidates existing and new procedures will be produced for compliance with NQA-1 requirements.

4.0 Application of Results

4.1 Site Investigation

Areal variations in radiogenic noble gas concentrations will be examined to see if flow directions and flow rates in the saturated zone can be defined. These directions and rates will be compared to the results obtained from hydrology investigations. The two methods may or may not yield consistent results. If consistent results are obtained, the two different approaches are corroborative. If inconsistent results are obtained, then each method requires evaluation to identify a specific process or event that causes the inconsistency. An example of this would be minor recent faulting or subsidence producing different hydrologic gradients than those that persisted in the past.

The non-radiogenic noble gas data will be studied in context with paleothermal applications now commonly used. Attempts will be made to relate paleotemperature at recharge with the chronology information. The identification of relic geothermal waters will be made if large depletions of the non-radiogenic noble gases are found.

4.2 Resolution of Performance Issues

Data from this study will be applied in context with the models developed for delineating principal paths of water transport (see Sections 8.3.5.12 and 8.3.5.13 of the SCP/CD). The primary application is to see if the noble gas results provide an aid in resolving relative transport times in the unsaturated and saturated zones. Simple concordance among chronology methods is not an expected result. Rather, the disconcordance among methods will need to be understood and related to detailed processes. It may then be possible to obtain meaningful values for the relative time intervals in the unsaturated and saturated zones. These time intervals enter equations 8.3.5.13-8, 8.3.5.13-21, 8.3.5.13-23, and 8.3.5.13-24 in the SCP/CD. Distinguishing these time intervals allows identifying which flow regime (saturated vs. unsatu-

rated) dominates in importance for the migration of radionuclides from the repository.

5.0 Schedule and Milestones

Item	Date or Event
Consolidate and transmit QA materials for review and approval.	11/88
Collect rock samples.	Samples provided from existing core, excavations, or new drilling activities.
Collect groundwater samples.	Access to existing wells or commences with drilling activities.
Perform analysis of rock and water samples.	Ongoing as samples become available.
Perform calculations and data interpretation of results.	Completion of two to four wells and corresponding sample analysis.
Complete report on the study in relation to mission and siting guidelines.	Estimated at two years from start date, assuming concurrent drilling activity.

References

Andrews, J. N., and Lee, D. J. (1979). Inert gases in groundwater from the Bunter Sandstone of England as indicators of age and paleoclimatic trends. *J. Hydrol.* 41, 233-352.

Heaton, T. H. E. (1984). Rates and sources of ^{4}He accumulation in groundwater. *Hydrol. Sci. J.* **29**, 29-47.

Heaton, T. H. E., Talma, A. S., and Vogel, J. C. (1986). Dissolved gas paleotemperatures and ^{18}O variations derived from groundwater near Uitenhage, South Africa. *Quarternary Research* **25**, 79-88.

Mazor, E.; Jaff, F. C.; Fluck, J.; and Dubois, J. D. (1986). Tritium corrected 4He applied to deduce ages of mixed groundwaters: examples from the Baden region, Switzerland. *Geochim. Cosmochim. Acta.* 50, 1611-1618.

Sugisaki, R. (1961). Measurement of effective flow velocity of groundwater by means of dissolved gases. *Amer. J. Sci.* **259**, 144-153.

Torgersen, T. (1980). Controls on pore-fluid concentration of ^{4}He and ^{222}Rn and the calculation of $^{4}He/^{222}Rn$ ages. *J. Geochem. Explor.* 13, 57-75.

Unites States Department of Energy (1988). DOE/RW 0161 and DOE/RW 0160, Consultation Draft, Site Characterization Plan, Yucca Mountain Site, Nevada Research and Development Area, Nevada. Available from NTIS, Springfield, Virginia.

Zaikowski A.; Kosanke, B. J.; and Hubbard, N. (1987). Noble gas composition of deep brines from the Palo Duro Basin, Texas. *Geochim. Cosmochim. Acta.* 51, 73-84.

Zartman, R. E.; Wasserburg, G. J.; and Reynolds, J. H. (1961). Helium, argon, and carbon in some natural gases. *J. Geophys. Res.* 66, 277-306.

GRAND JUNCTION PROJECTS OFFICE

PROPOSED
YUCCA MOUNTAIN GEOCHRONOLOGY
using
Noble Gas Isotope Methods

FY	Duration	Est. Cost	FTE
89	5	$100,000	0.8
90	12	$247,000	2.0
91	12	$312,000	2.5
92	12	$368,000	3.0
93	12	$214,000	1.5
		$1,241,000	

Contacts:

R. Eldon Bray	FTS 326-6014	DOE Rep
John Duray	FTS 326-6702	UNC Geotech, Manager
A. Zaikowski	FTS 326-6724	UNC, Prin. Investigator

4 April 1989

FY-1989 TASKS/DESCRIPTIONS/RELATION TO STUDY PLAN
ACTIVITY: GEOCHRONOLOGY BY (U, Th) - ^{4}He AND ^{4}He-^{222}Rn METHODS

Task #	Descriptions	Relation to Study Plan
#1	Implementation of NQA-1 for GJPO activities includes: a) Review and approval of existing NQA-1 program (technical and administrative) for high-level waste repositories. b) Quality Assurance audits.	Review, approval and pre-award audits for activities and materials described in Section 3.7.
#2	Review and revision of existing study plan for the activity "GEOCHRONOLOGY BY (U, Th) - ^{4}He AND ^{4}He - ^{222}Rn METHODS." a) Revisions to be based on peer review of existing text. b) Additional, QA collateral text required for Technical Plan.	Task relates to Study Plan per se.
#3	Theory and application of geochronology methods as it relates to groundwater flow in saturated and unsaturated aquifers. Includes: a) Development of geochronology/mathematical theory for the multiplicity of geochronology methods that will be applied in site characterization of the Yucca Mountain Research and Development Area. b) Develop and explain relationship to higher level findings with limits on alternative interpretations of hydrologic models. Comparisons and distinctions relative to physical hydrology findings. c) Synthesis of theory and applications of geochronology results gained from experience with SRP (Salt Repository Program) and BWIP (Basalt Waste Isolation Project) where significant to Yucca Mountain site characterization.	a) Initial theoretical development to support Sections 2.2 and 2.3. b) Initial studies with existing data to support Section 1.3. c) Extension of existing high-level waste program data to support Section 2.3.

Task #	Descriptions	Relation to Study Plan
#4	Corresponding publication (peer review journal article) with DOE approval cycle for 3.c.	Dissemination of results.
#5	Collaboration and coordination of activities with PNL (J. C. Laul) for certain relevant isotopes in uranium series decay chain (both water and core).	Start-up efforts for activities described in Section 3.5.
#6	Preliminary sampling of two wells with evaluation of the reliability of alternative sampling methodologies.	Start-up efforts for activities described in Sections 3.1, 3.2, 3.3.

Percentage of Total Effort for Each Task

Task No.	1	2	3(a,b,c)	4	5	6
Percentage	25%	10%	30%	15%	10%	10%

Title: FY 1990 - 93 Work Plan for Working Group 3

Subject: Groundwater Flow by Geochronology Methods
Activity: Geochronology by (U, Th)-^{4}He and ^{4}He-^{222}Rn Methods
Performer: UNC Geotech, DOE Grand Junction Projects Office

1.0 INTRODUCTION

A combination of methods are needed to develop the higher-level findings significant to siting a high-level nuclear waste repository at Yucca Mountain. Geochronology of groundwaters is one scientific method that can be used to support higher-level findings for the various release-scenario classes. A multiplicity of methods are needed because of the existence of different hydrologic regimes and the presence of mixed groundwaters. The work described here aids in coupling some of the groundwater chronology methods to examine site suitability.

1.1 Objective

The primary objective of this activity will be to apply the noble gas dating methods to groundwaters at the Yucca Mountain, Research and Development Area. The groundwater ages obtained by these methods will then be compared to results obtained by other isotopic dating schemes. A synthesis of results will be made in order to address two principal performance issues described in the Site Characterization Plan (DOE, 1988, Section 8.1).

Issue 1.6: Will the site meet the performance objective for pre-waste-emplacement ground-water travel time as required by 10 CFR 60.113?

Issue 1.1: Will the mined geologic disposal system meet the system performance objective for limiting radionuclide material to the accessible environment as required by 10 CFR 60.112 and 40 CFR 191.13?

A series of alternative conceptual models will be produced in order to obtain a complete explanation of various groundwater ages. Both new and existing data are to be incorporated into the models. Calculations using the models will limit the available range of groundwater travel times to the accessible environment [cf. NRC; 10 CFR 60.113(a)(2)].

1.2 Participating Organizations

The organizations participating in the Working Group each have research efforts on isotopes of elements that relate directly to interdisciplinary approaches to geochronology. These organizations are listed in Table 1.

Table 1. Participating Organizations

Organization	Isotope System	Lead Investigator
Pacific Northwest Laboratory	Uranium Series Nuclides	J.C. Laul
Los Alamos National Laboratory	^{36}Cl	D. Curtis
U.S. Geologic Survey	^{14}C	TBD
UNC Geotech	^{4}He, $^{20,22}Ne$ $^{36,38,40}Ar$ ^{222}Rn-^{226}Ra	A. Zaikowski

2.0 ORGANIZATIONAL INTERFACE

Initial efforts (FY-89) for this activity are confined largely to on-site (GJPO) research and development with reporting to the WG Team Leaders. Collaborative efforts would first be re-established with PNL due to the need to share data and coordinate field work so meaningful samples can be collected from the site. Subsequent interaction with other organizations will be governed by the sequence in which new data are collected and theoretical models developed. The greatest emphasis on interactive activities occurs in the 1991 to 1993 time frame.

3.0 DESCRIPTION OF ACTIVITIES

3.1 Geochronology by (U, Th)- ^{4}He and ^{4}He-^{222}Rn Dating Methods

3.1.1 General description of the activity

This study is directed toward obtaining knowledge in four areas significant to the site characterization process. The first is to determine the extent to which concordance exists for residence times of groundwater. Concordance, in this context, is defined as the same residence time obtained by alternative chronology methods. Presently, among the suite of geochronology methods available, only ^{14}C, ^{36}Cl, and (U, Th)-^{4}He are reasonably well understood for this practice.

The second type of information sought relates to the identification of circumstances where groundwaters are best represented as mixed components. The composition of radiogenic and non-radiogenic noble gases will vary in accordance with prior history of groundwater flow. When combined with other geochemical data, it is often possible to resolve multiple components in such waters and limit the residence time for one particular component. Apparent groundwater ages obtained by a single chronology method that treats the groundwater as a one-component system does not normally yield valid results for a saturated zone. Often, young recharge waters are being added to some pre-existing water that is older. To resolve these components of different age, it is necessary to invoke more than one chronology method.

A third aspect of the study is to determine residence times for waters, or components thereof, that are beyond the limit accessible to the ^{14}C and ^{36}Cl methods. The (U, Th)-^{4}He chronometer functions in a manner opposite to that of ^{14}C and ^{36}Cl. Both these isotopes undergo radioactive decay such that eventually their concentrations fall below detection limits. The ^{4}He accumulates with time, and hence there is no upper limit to the determinable age.

The fourth type of information that is valuable relates to examining consistency of (U, Th)-^{4}He ages with flow rates inferred by the physical hydrology methods. Comparison of these methods provides insight as to whether present day hydrologic gradients have persisted sufficiently long to be reflected in concentration gradients of ^{4}He. The magnitude of flow at a given location will be proportional to the depletion of ^{4}He that could have accumulated in the combined water plus rock system over the available geologic time.

Data from the measurements of noble gases (^{4}He, ^{20}Ne, ^{36}Ar, $^{40}Ar/^{36}Ar$, and ^{222}Rn) in groundwater and core will be combined with U, Th, and K results in order to calculate apparent groundwater residence times and paleotemperature. The calculations will rely on published methods for single and multi-component systems (Zartman et al., 1961; Andrews and Lee, 1979; Torgersen, 1980; Mazor et al., 1986; and Zaikowski et al., 1987).

A synthesis of isotopic and geochemical data is intended to reveal detailed processes that have produced observed compositions. To be useful, the (U, Th)-^{4}He systematics will need to be coupled to the other chronology methods, all of which require geochemical mixing models for both the unsaturated and saturated zones. None of the chronology methods are flawless. Hence, it is important to evaluate their inherent reliability in providing meaningful interpretation in context with hydrogeochemical models of the site.

3.1.2 Organization and level of effort

This activity is performed by UNC Geotech, the on-site contractor at the U.S. Department of Energy, Grand Junction Projects Office. UNC Geotech has performed similar activities for the Salt Repository Project and the Basalt Waste Isolation Project. Principals involved in carrying out the work are J. Duray (Manager), A. Zaikowski (Principal Scientist), R. Spangler (Physicist), and D. Riddle (Quality Assurance Specialist). Additional personnel perform work on the project in a matrix management environment. For FY 89 a (1) FTE effort is expected. Subsequent fiscal years would range from 2 to 3 FTE.

3.1.3 Schedule and milestones

Milestone	Completion Date
The theoretical equations for the time dependent isotopic compositions of a binary groundwater system, having two components of different age, will be developed. Computer programs for ages will be produced and trial input data will be used for testing criteria applicable to the models.	10/90
The theoretical equations for the time dependent isotopic compositions for unsaturated and saturated flow conditions will be developed. The significance of age differentials among the chronology methods will be used to provide guidance for release-scenario classes.	10/91
Data for the isotopic composition of groundwater and core will be evaluated and the results incorporated in the various alternative conceptual models. The ages derived from those models will serve as input to travel times used in the release scenario classes.	10/92
Collaborative writing of text for the DEIS will be started with concurrent examination for internal consistency of isotopic data with geochemistry and physical hydrology models. The significance of the results to performance assessment will be formulated for site characterization issues.	10/93

3.1.4 Role of the activity

The activities relating to groundwater chronology studies are necessary to fulfill the information needs specified in the SCP/CD. Specifically, the activity conducted as part of the GJPO research helps fulfill Information Needs 1.6.2, 1.6.3, and 1.6.4 described in the SCP/CD (pp. 8.3.5 12 - 39 to 8.3.5. 12 - 69). The technical aspects on how this will be accomplished is contained in the Study Plan, "Geochronology by (U, Th)-^{4}He and ^{4}He-^{222}Rn Methods." Parallel efforts are contained in other Study Plans. For Issue 1.1 the activity bears directly on developing the isotopic methods that will be used in generating ages of value to the release-scenario classes (SCP/CD, pp. 8.3.5.13-17-8.3.5.13-50). Relations to specific equations are contained in the Study Plan.

4.0 IDENTIFICATION OF INCONSISTENCIES AMONG ACTIVITIES

Presently, no inconsistencies can be identified between or among activities and the long-term objective. The work is complimentary and in some instances supplemental to the basic physical hydrology methods.

Bibliography

NATURAL RADIONUCLIDES IN GROUNDWATER FROM J-13 WELL AT THE NEVADA TEST SITE

J. C. Laul and T. C. Maiti
Pacific Northwest Laboratory
Richland, WA 99352

The study of natural radionuclides of uranium and thorium decay series in site-specific groundwaters and cores (water/rock interaction) can provide information on the expected behavior of their radioactive waste and analog radionuclides with respect to their migration from a potential repository [1-3]. Groundwater movement is the prime mechanism for transport of radionuclides and other trace elements in water/rock interactions. The natural radionuclides of interest in the U-238 and Th-232 series are: U-238, Th-234, U-234, Th-230, Ra-226, Rn-222, Pb-210, Bi-210, Po-210; Th-232, Ra-228, Th-228, Ra-224. The daughter radionuclide half-lives range from 3 days to 2.5×10^5 years. The geochemical properties (valence state, solubilities, etc.) of these radionuclides vary widely; consequently, radioactive disequilibrium (activity dpm) between the parent and its daughter always exists in groundwaters. The extent of this disequilibrium is a function of groundwater composition and surrounding geological material. It is this disequilibrium that can provide information on in situ retardation factors, in situ sorption and desorption coefficients and their associated kinetics (residence time), and redox state of the environment [3-5]. Natural radionuclide data can be used to infer groundwater mixing and to validate and develop transport models [6,7] for performance assessment. The natural radionuclide data can also provide baseline information for future monitoring of any possible radioactive waste releases.

The J-13 well is a water-supply well (1220 ft) located about 5 km southeast of the potential repository site; the water is derived from tuffaceous rock and represents Topopah Spring Member. The water contains predominantly sodium bicarbonate with a total dissolved solid (TDS) content of 253 mg/l (low ionic strength). The apparent age of the groundwater, derived from carbon-14 age dating, is 9900 years [8]. J-13 water was sampled in July 1989. The preliminary conclusions based on the natural radionuclide data are as follows.

The concentrations of uranium, thorium, radium, radon, lead, and polonium radionuclides are extremely low, well below their solubility limits, suggesting that the observed concentrations in groundwaters are largely governed by sorption/desorption processes. Radon (gas) has the highest activity 660 dpm/l and is not sorbed on the matrix, and thus is considered an indicator of the total in situ supply rate in the U-238 chain [4]. For comparison the data are normalized to Rn-222 and the activity ratios are shown in Figure 1. Since the retardation factor (RF) is inversely proportional to an activity ratio (RF = 1/AR, assuming the same recoil supply efficiency) (where A_{radon} = mobile front and $A_{radionuclide}$ = stationary front), the uranium, thorium, radium, and polonium are highly retarded (sorbed) in a tuffaceous matrix. The RFs range from 10^3 to 10^5. For example, the RF for Th-230 is 1.5×10^5 and for Ra-226 is 6.7×10^3.

The U-234/Th-230 ratio is quite high (560), suggesting that uranium is in the +6 state and the aquifer's environment is highly oxidizing. U-234/Th-230 ratios of near unity are noted in the reducing environment. In the Columbia River at the Hanford Site, the U-234/Th-230 ratio is 240 and U is in the +6 state [2]. The U-238/Th-232 ratio in the J-13 water is 230,

while this ratio is 0.60 in the tuffaceous rocks [9], suggesting that, relative to Th, uranium (+6) is 380 times more soluble. Uranium (+6) is present probably as carbonate complex (UO_2CO_3), as the water is predominantly sodium bicarbonate.

The Ra-224/Ra-226 ratio of 9.6 and Ra-228/Ra-226 ratio of 6.0 in J-13 water indicate that the Th/U ratio in the matrix is expected to be high, which is consistent with the high Th relative to U content in the Ash flow tuff (Th 24.8 ppm, U 4.7 ppm; activity ratio = 1.7) [9].

The natural radionuclide and trace element data were obtained in unfiltered, 0.8-μm filtered and 0.10-μm filtered waters. The concentrations of these elements and radionuclides are nearly identical, suggesting no colloidal effect in radionuclide transport.

SUMMARY

The concentrations of U-238 and Th-232 chain members and other trace elements are extremely low in J-13 water. Relative to Rn, uranium, thorium, radium, and polonium radionuclides are highly sorbed and the retardation factors range from 10^3 to 10^5. Uranium, unlike Th, is in the +6 state and is soluble as carbonate complex, and the aquifer's environment is oxidizing. There is no colloidal effect, down to <0-10 μm, in radionuclide transport.

REFERENCE

1. J. C. Laul, M. R. Smith and N. Hubbard. "$^{234}U/^{230}Th$ Radio as an Indicator of Redox State and U, Th, and Ra Behavior in Briny Aquifers." Scientific Basis for Radioactive Waste Management IX, Mat. Res. Soc. Symp. Proc., 50, 673-680 (1986).

2. M. R. Smith, J. C. Laul and V. G. Johnson. "Natural Radionuclides in Hanford Site Groundwaters." Scientific Basis for Radioactive Waste Management XI, Mat. Res. Sci. Symp. Proc., 112, 249 (1988).

3. J. C. Laul and M. R. Smith. "Disequilibrium Study of Natural Radionuclides of U and Th Series in Cores and Briny Groundwaters from Palo Duro Basin, Texas." Radioactive Waste Management and Nuclear Fuel Cycle, 11(2), 169 (1988).

4. S. Krishnaswami, W. C. Graustein, K. K. Turekian and J. F. Dowd. "Ra, Th and Radioactive Pb Isotopes in Groundwaters: Application to the In-Situ Determination of Adsorption-Desorption Rate Constants and Retardation Factors," Water Resources Research, 18, No. 6, 1633 (1982).

5. J. G. Zukin, D. E. Hammond, T. L. Ku and W. A. Elders. "Uranium-Thorium Series Isotopes in Brines and Reservoir Rocks from Two Deep Geothermal Well Holes in the Salton Sea Geothermal Field, Southeastern California," Geochimica et Cosmochimica Acta, 51, 2719 (1987).

6. F. L. Parker and J. L. Grant. "Chemical Migration of Radionuclides in Soil," Trans. Am. Nucl. Sol, 32, 85 (1979).

7. P. L. Chambre', T. H. Pigford, A. Fujita, T. Kanki, A. Kobayashi, H. Lung, D. Ting, Y. Sato and S. J. Zavoshy. "Analytical Performance Modes for Geologic Repositories," Report LBL-14842, Lawrence Berkeley Laboratory, U. of California (1982).

8. W. Thordarson. "Geohydrologic Data and Test Results from Well J-13 Nevada Test Site, Nye County, Nevada," U.S.G.S. Report 83-4171 (1983).

9. R. A. Zinlinsky, et al. "Water-Rock Interaction in Ash Flow Tuffs (Yucca Mountain), the Record from the Uranium Study," Uranium, Vol. 2, 361 (1986).

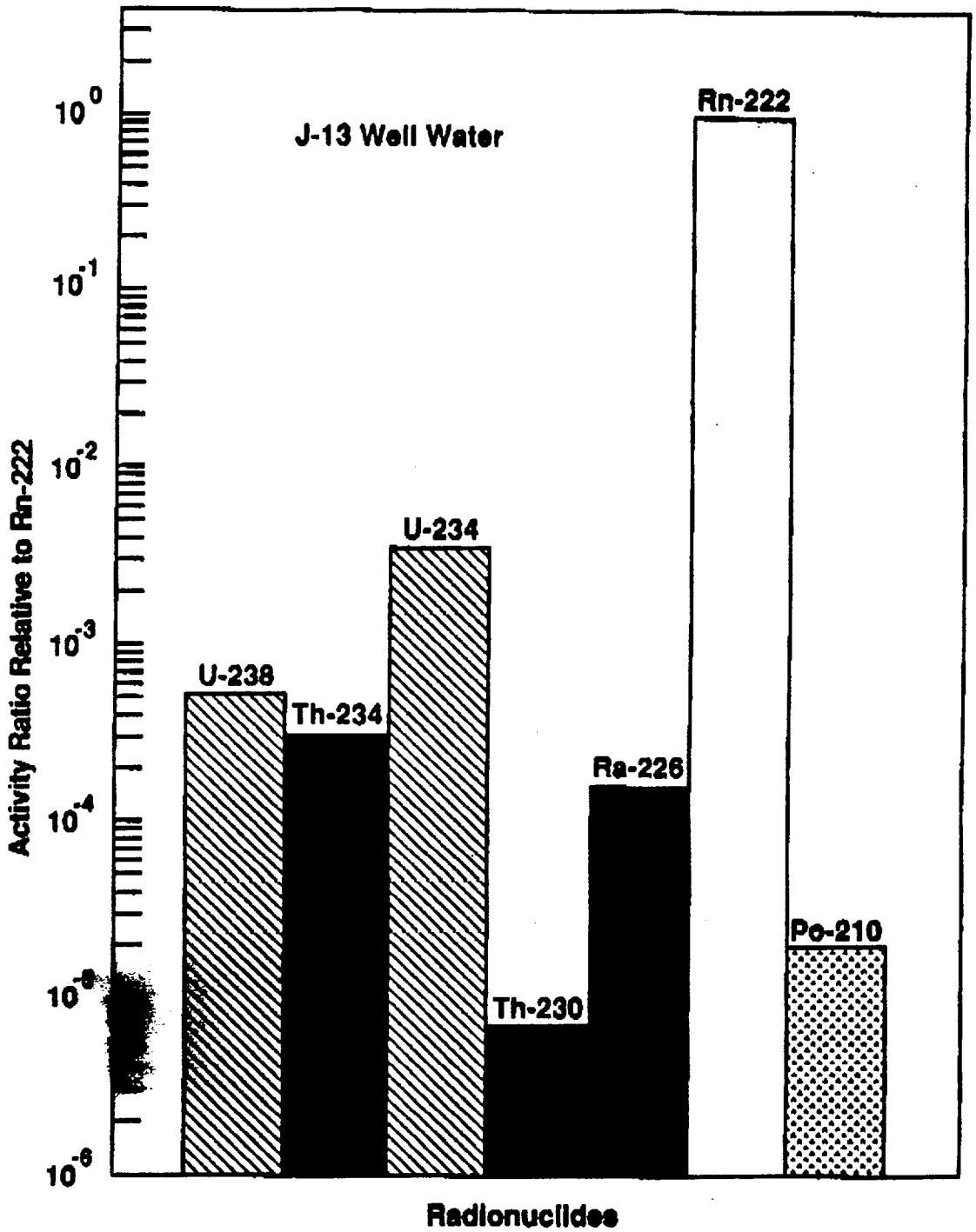
J-13 Well Water
Activity Ratio Relative to Rn-222
10^{0}
10^{-1}
10^{-2}
10^{-3}
10^{-4}
10^{-5}
10^{-6}
U-238
Th-234
U-234
Th-230
Ra-226
Rn-222
Po-210
Radionuclides

38910044